WEST VIRGINIA

SECRETARY OF STATE

KEN HECHLER

ADMINISTRATIVE LAW DIVISION

FORM #3

Do Not Mark In This Box

RECEIVED
97 AUG -1 PM 2:43
OFFICE OF WEST VIRGINIA
SECRETARY OF STATE

NOTICE OF AGENCY APPROVAL OF A PROPOSED RULE
AND
FILING WITH THE LEGISLATIVE RULE-MAKING REVIEW COMMITTEE

AGENCY: Division of Environmental Protection, Office of Air Quality TITLE NUMBER: 45

CITE AUTHORITY W.Va. Code §§22-5-1 et seq. & §§22-18-1 et seq.

AMENDMENT TO AN EXISTING RULE: YES X NO ____

IF YES, SERIES NUMBER OF RULE BEING AMENDED: 25

TITLE OF RULE BEING AMENDED: "To Prevent and Control Air Pollution from Hazardous Waste Treatment, Storage, or Disposal Facilities"

IF NO, SERIES NUMBER OF NEW RULE BEING PROPOSED: ____

TITLE OF RULE BEING PROPOSED: ____

THE ABOVE PROPOSED LEGISLATIVE RULE HAVING GONE TO A PUBLIC HEARING OR A PUBLIC COMMENT PERIOD IS HEREBY APPROVED BY THE PROMULGATING AGENCY FOR FILING WITH THE SECRETARY OF STATE AND THE LEGISLATIVE RULE MAKING REVIEW COMMITTEE FOR THEIR REVIEW.

John H Johnson

Authorized Signature

$11.00

BUREAU OF ENVIRONMENT
10 McJunkin Road
Nitro, WV 25143-2506

CECIL H. UNDERWOOD
GOVERNOR

JOHN E. CAFFREY
COMMISSIONER

July 28, 1997

Ms. Judy Cooper
Director, Administrative Law Division
Office of the Secretary of State
Capitol Complex
Charleston, West Virginia 25305

RE: 45CSR25 - To Prevent and Control Air Pollution
From Hazardous Waste Treatment,
Storage or Disposal Facilities

Dear Ms. Cooper:

This is to advise you that I am giving approval for filing of the above-referenced rule with your Office and the Legislative Rule-Making Review Committee as an agency-approved rule.

Your cooperation in this regard is very much appreciated. If you have any questions or require additional information, please feel free to contact Carrie Chambers at 759-0515.

Sincerely yours,

John E. Caffrey
Commissioner

JEC:cc

Attachment

DATE: August 1, 1997

TO: LEGISLATIVE RULE-MAKING REVIEW COMMITTEE

FROM: JOHN H. JOHNSTON
CHIEF, OFFICE OF AIR QUALITY
DIVISION OF ENVIRONMENTAL PROTECTION

LEGISLATIVE RULE TITLE: Series 25 - "To Prevent and Control Air Pollution from Hazardous Waste Treatment, Storage, or Disposal Facilities"

1. Authorizing statute(s) citation W. Va. Code §§22-5-1 et seq. & §§22-18-1 et seq.

2. a. Date filed in State Register with Notice of Hearing:

June 17, 1997

b. What other notice, including advertising, did you give of the hearing?

Class I legal advertisement filed in the Charleston Daily Mail and the Charleston Gazette

c. Date of hearing(s): July 21, 1997

d. Attach list of persons who appeared at hearing, comments received, amendments, reasons for amendments.

Attached X No comments received _____

e. Date you filed in State Register the agency approved proposed Legislative Rule following public hearing: (be exact)

August 1, 1997

f. Name and phone number of agency person to contact for additional information:

John H. Johnston, Chief

Office of Air Quality

Phone: 558-2496

3. If the statute under which you promulgated the submitted rules requires certain findings and determinations to be made as a condition precedent to their promulgation:

a. Give the date upon which you filed in the State Register a notice of the time and place of a hearing for the taking of evidence and a general description of the issues to be decided.

N/A

b. Date of hearing: N/A

c. On what date did you file in the State Register the findings and determinations required together with the reasons therefor?

N/A

d. Attach findings and determinations and reasons:

Attached N/A

BUREAU OF ENVIRONMENT
DIVISION OF ENVIRONMENTAL PROTECTION

BRIEFING DOCUMENT

Rule Title: 45CSR25 - "To Prevent and Control Air Pollution from Hazardous Waste Treatment, Storage, or Disposal Facilities"

A. AUTHORITY: W.Va. Code §§22-5-1 et seq. and §§22-18-1 et seq.

B. SUMMARY OF RULE:

The current version of 45CSR25 establishes a program of regulation over the treatment, storage, and disposal of hazardous wastes in order to achieve and maintain such levels of air quality as will protect the public health and safety and the environment from the effects of improper, inadequate, or unsound treatment, storage, or disposal of hazardous wastes.

C. STATEMENT OF CIRCUMSTANCES WHICH REQUIRE RULE:

The proposed rule changes are required to reflect the Office of Waste Management newly revised regulations at 33CSR20 (formerly 47CSR35). The proposed changes will maintain consistency of this rule with the Office of Waste Management's current regulations and with the current federal rule.

D. FEDERAL COUNTERPART REGULATIONS - INCORPORATION BY REFERENCE/DETERMINATION OF STRINGENCY:

A federal counterpart to this proposed rule exists. In accordance with the Director's recommendation, and with limited exception, the Office of Air Quality proposes that the rule incorporate by reference the federal counterparts.

Because the proposed rule incorporates by reference the federal counterpart, no determination of stringency is required.

E. CONSTITUTIONAL TAKINGS DETERMINATION:

In accordance with §22-1A-1 and 3(c,) the Director has determined that this rule will not result in taking of private property within the meaning of the Constitutions of West Virginia and the United States of America.

F. CONSULTATION WITH THE ENVIRONMENTAL PROTECTION ADVISORY COUNCIL:

At their July 2, 1997 meeting, the Environmental Protection Advisory Council reviewed and discussed this rule - there were no substantive changes as a result of their discussion. (See attached minutes of that meeting.)

MINUTES

ENVIRONMENTAL PROTECTION ADVISORY COUNCIL

July 2, 1997 - Office of Air Quality's Conference Room

The seventh meeting of the DEP Advisory Council was held July 2, 1997 in the Office of Air Quality's Conference Room in Charleston. The meeting was called to order at 1:00 p.m. by Chairman Jack Caffrey.

Attending:

Advisory Council Members:

Jack Caffrey, Chairman
Jacqueline Hallinan
Larry Harris
Martha Moore
William Raney
Rick Roberts
William Samples

DEP:

Mark Scott	John Johnston
Cap Smith	John Benedict
Mike Dorsey	Lucy Pontiveros
Russ Hunter	Karen Watson
Ted Streit	
Gene Coccari	

Discussion:

1. Review minutes of May 5, 1997 meeting.

The minutes of the May 5 meeting were approved without amendment.

2. Review Proposed DEP Rules.

In accordance with WV Code §22-1-3(c) which requires the Director of the Division of Environmental Protection to consult with the Advisory Council members prior to proposing any new rule (or amendments to a rule), the following rules were presented to the members. Mark Scott told the Council members that if they have comments concerning the amendments to the rules they will be made part of the rule package when it is filed with Legislative Rule-Making and the Secretary of State's Office August 1. The Council members may also submit written comments to Carrie Chambers until the close of each respective public hearings. These will also be made part of the rule package when filed.

a) Office of Mining and Reclamation - 38CSR2 "Surface Mining Reclamation Rule":

Russ Hunter, Counsel for OMR, explained the proposed amendments to the Surface Mining Rule. He said the amendments mainly relate to four areas: 1) to allow for coal removal incidental to commercial development of real estate; 2) remining provisions; 3) special reclamation costs; and 4) ownership and control issues.

Gene Coccari, Manager of the Ownership and Control Unit in the Office of Mining and Reclamation, briefed Council members on amendments to that section of the rule. He explained that the proposed state rules appear to be more stringent than the interim federal rule currently in place in that the proposed rules allow DEP to link and block parent companies of permittee, which is not specifically addressed in the federal rule.

b) Office of Waste Management - 33CSR20 "Hazardous Waste Management Rule":

Mike Dorsey, Office of Waste Management, explained that the Hazardous Waste rule is updated annually to reflect changes in the federal regulations and were not substantive changes. He said there are two other amendments in the rule: 1) the appendix that currently contains a synopsis of the small quantity generator rule has been eliminated; and 2) a change in the groundwater monitoring requirements for hazardous waste permits (which is being done in conjunction with a change in the groundwater rule). Also, the rule is amended by clarifying what information is to be included in the administrative record of a permit.

In response to a question by Bill Raney, Mike explained that the proposed rule differs from existing federal requirements in three ways: 1) We require all generators of hazardous waste to notify of their activity, EPA does not require conditionally-exempt small quantity generators (CESQGS) to notify; 2) The EPA regulations say that CESQGS can put their wastes into municipal landfills if they are permitted to accept that waste. West Virginia's Solid Waste rule states that no hazardous waste may go into the state's landfills; therefore, none are permitted to accept the waste; and 3) In the permitting requirements, we have given the chief of Waste Management greater latitude in deciding what sampling parameters must be utilized and what frequently may be required at permitted facilities than the federal rule.

c) Office of Oil and Gas: 35CSR1 "Miscellaneous Water Pollution Control Rule"; 35CSR2 "Oil and Gas Operations - Solid Waste Rule"; 35CSR3 "Coalbed Methane Wells Rule"; 35CSR4 "Oil and

Gas Wells and Other Wells Rule"; 35CSR5 "Designation of Future Use and Inactive Status for Oil and Gas Wells Rule"; and 35CSR6 "Abandoned Wells Rule":

Ted Streit, Chief of the Office of Oil and Gas, stated that Series 1 through 6 of the Oil and Gas rules were not part of DEP's 1997 Technical Cleanup Bill. Therefore, they are being filed this session to update code references, provisions that are contrary to current law, office, names, titles, punctuation, etc. There are no substantive changes to these rules.

Ted said two additional oil and gas rules - 38CSR16 "Certification of Gas Wells" and 38CSR14 "Dam Safety" are being repealed. 38CSR16 is being repealed because the underlying state and federal statute that required the agency to classify the wells no longer exists, and 38CSR14 is being repealed and a comparable rule in the Office of Water Resources (47CSR34 - "Dam Safety") enforces dam safety.

d) Office of Air Quality - 45CSR25 "To Prevent and Control Air Pollution From Hazardous Waste Treatment, Storage or Disposal Facilities"; 45CSR33 "Acid Rain Provisions and Permits"; 45CSR44 "Emission Standards for Hazardous Air Pollutants Pursuant to 40 CFR Part 63"; 45CSR23 "To Prevent and Control Emissions From Municipal Solid Waste Landfills"; and 45CSR7 "To Prevent and Control Particulate Air Pollution From Manufacturing Process Operations:"

John Johnston, Chief of the Office of Air Quality, presented Air Quality's proposed rule amendments to the Council. He stated that 45CSR25, 45CSR33, and 45CSR34 were amended to incorporate by reference federal requirements that are necessary to keep the program up to date under Title 5, and that they do not contain any substantive changes.

John said the proposed new rule, 45CSR23 "To Prevent and Control Emissions from Municipal Solid Waste Landfills" will establish standards of performance and emission guidelines for municipal solid waste landfills. The standards will require facilities with municipal solid waste landfill emissions exceeding approximately 55 tons per year to install an air pollution control system within 2.5 years. These standards will also be adopted by reference. The advisory council inquired about the stringency of the rule, the difference between non-municipal and municipal solid wastes, and if the rule will impact landfills that are closed.

John said the agency filed 45CSR7 - "To Prevent and Control Particulate Air Pollution From Manufacturing Process Operations" as an emergency rule on June 27 as authorized in HB 2333. This emergency rule will establish specific emissions performance

standards for pot and marble fiberglass operations, and will only affect one existing fiberglass production facility located in Vienna, Wood County. A counterpart, permanent rule effecting the same amendment, has also been filed.

After discussion of OAQ's rules, John Johnston asked John Benedict, Assistant OAQ Chief, to discuss the ongoing Ozone Transport Assessment Group (OTAG) issue and the outcome of meetings with EPA and other affected states.

The Council members inquired about the non-attainment situation in the Weirton area (and other areas in West Virginia). John Benedict briefly discussed the current status of that situation and the possible EPA-imposed sanctions within one year if West Virginia's SO^2 and PM^{10} SIP are deficient.

The Council members were then briefed by Earl Billingsley of the Air Quality Office on the application by Virginia Power for an opacity variance at their Mt. Storm Power plant.

3) Consideration of issues raised at May 5, 1997 meeting.

(1) Mr. Caffrey informed the Council that DEP will hold a training session for DEP staff on how to more effectively work with the Legislature.

(2) Mark explained that the list of policies and procedures requested by the Council members is in the process of being completed. He distributed a list of policies compiled to date. After a brief discussion, Council requested that Mark provide a list of DEP policies and procedures, the title, effective date, policy number, and the name of DEP's office contact for the Council's review.

(3) Mark updated the Council members on the pay equity issue raised in the last meeting and informed them that DEP's EEO coordinator would be undertaking a more detailed study later this year to clarify if DEP has a problem in this area.

(4) The Council members expressed concern over the TMDL issue and why there was such a change in the ranking of streams between the 1994 and 1996 303(d) lists provided to EPA. Council requested an update on this issue at a future meeting.

4) The following issues were discussed for upcoming meetings:

(1) Regulation of the timbering industry - Mark Scott suggested that Bill Maxey, Director of the Division of Forestry, be invited to attend a future Council meeting to discuss this issue;

(2) The Legislative agenda for the 1998 Session;

(3) Presentation by DEP's Manager of Information Services on DEP's one-stop grant and our vision of future computer capabilities;

(4) Acid mine drainage;

(5) Valley fills and mountain top removal practices at mining operations;

(6) Industry's concerns about the Office of Oil and Gas as a regulatory agency;

(7) Status of the Elkins landfill;

(8) Corps of Engineers nationwide permits and conditions required by DEP in those permits;

(9) An update of the Volunteer Remediation and Development program;

(10) Regulation of chicken waste in the poultry industry in the eastern panhandle;

(11) DEP's proposed consolidated building; and

(12) Status of the coal mining mitigation, including council consideration of supporting studies funded by DEP's mitigation fund.

A brief discussion was held concerning date and place of the next Council meeting. Bill Raney suggested incorporating the next meeting with the national AML Conference scheduled at Canaan Valley August 17-20.

The meeting concluded at 4:30 p.m.

APPENDIX B

FISCAL NOTE FOR PROPOSED RULES

Rule Title: 45CSR25 - "To Prevent and Control Air Pollution from Hazardous Waste Treatment, Storage, or Disposal Facilities"

Type of Rule: X Legislative _____ Interpretive _____ Procedural

Agency: Office of Air Quality

Address: 1558 Washington Street, East

Charleston, WV 25311-2599

1. Effect of Proposed Rule	Annual		Fiscal Year		
	Increase	Decrease	Current	Next	There-after
Estimated Total Cost	$ -0-	$ -0-	$ -0-	$ -0-	$ -0-
Personal Services	-0-	-0-	-0-	-0-	-0-
Current Expense	-0-	-0-	-0-	-0-	-0-
Repairs and Alterations	-0-	-0-	-0-	-0-	-0-
Equipment	-0-	-0-	-0-	-0-	-0-
Other	-0-	-0-	-0-	-0-	-0-

2. Explanation of above estimates: The above estimates reflect that there will be no anticipated changes in costs to administer this rule.

3. Objectives of these rules: Amendment of this rule is sought to adopt by reference new or revised federal rules. The proposed rule changes are required to reflect the Office of Waste Management newly revised regulations at 33 CSR 20 (formerly 47 CSR 35). The proposed changes will maintain consistency of this rule with the Office of Waste Management's current regulations and with the current federal rule.

4. Explanation of overall economic impact of proposed rule.

A. Economic impact on state government.

See Section 2.

B. Economic impact on political subdivisions; specific industries; specific groups of citizens.

No impact above that from the currently applicable federal requirements.

C. Economic impact on citizens/public at large.

No impact above that from the currently applicable federal requirements.

Date: June 17, 1997

Signature of agency head or authorized representative:

John H. Johnston
Chief, Office of Air Quality

WEST VIRGINIA

SECRETARY OF STATE

KEN HECHLER

ADMINISTRATIVE LAW DIVISION

FORM #1

Do Not Mark In This Box

FILED

JUN 17 3 59 PM '97

OFFICE OF WEST VIRGINIA
SECRETARY OF STATE

NOTICE OF PUBLIC HEARING ON A PROPOSED RULE

AGENCY: Division of Environmental Protection, Office of Air Quality TITLE NUMBER: 45

RULE TYPE: Legislative ; CITE AUTHORITY W.Va. Code §§22-5-1 et seq. & §§22-18-1 et seq.

AMENDMENT TO AN EXISTING RULE: YES X NO ____

IF YES, SERIES NUMBER OF RULE BEING AMENDED: 25

TITLE OF RULE BEING AMENDED: "To Prevent and Control Air Pollution from Hazardous Waste Treatment, Storage, or Disposal Facilities"

IF NO, SERIES NUMBER OF NEW RULE BEING PROPOSED: ____

TITLE OF RULE BEING PROPOSED: ____

RECEIVED
JUN 17 1997
Legislative Rule Making
Review Committee

DATE OF PUBLIC HEARING: July 21, 1997 TIME: 6:00 p.m.

LOCATION OF PUBLIC HEARING: Office of Air Quality
1558 Washington Street, East
Charleston, West Virginia 25311

COMMENTS LIMITED TO: ORAL ____, WRITTEN ____, BOTH X

COMMENTS MAY ALSO BE MAILED TO THE FOLLOWING ADDRESS: John H. Johnston, Chief
Office of Air Quality
1558 Washington Street, East
Charleston, WV 25311

The Department requests that persons wishing to make comments at the hearing make an effort to submit written comments in order to facilitate the review of these comments.

The issues to be heard shall be limited to the proposed rule.

ATTACH A BRIEF SUMMARY OF YOUR PROPOSAL

John H. Johnston

Authorized Signature

CECIL H. UNDERWOOD
GOVERNOR

BUREAU OF ENVIRONMENT
10 McJunkin Road
Nitro, WV 25143-2506

JOHN E. CAFFREY
COMMISSIONER

June 17, 1997

Ms. Judy Cooper
Director, Administrative Law Division
Office of the Secretary of State
Capitol Complex
Charleston, West Virginia 25305

RE: 45CSR25 - "To Prevent and Control Air Pollution From Hazardous Waste Treatment, Storage, or Disposal Facilities"

Dear Ms. Cooper:

This is to advise you that I am giving approval for filing the above-referenced rule as Notice of Public Hearing/Comment Period.

Your cooperation in this regard is very much appreciated. If you have any questions or require additional information, please feel free to contact Carrie Chambers at 759-0515.

Sincerely yours,

John E. Caffrey
Commissioner

LEM:cc

Attachment

RECEIVED
97 AUG -1 PM 2:43
OFFICE OF WEST VIRGINIA
SECRETARY OF STATE

45CSR25

TITLE 45
LEGISLATIVE RULE
DIVISION OF ENVIRONMENTAL PROTECTION
OFFICE OF AIR QUALITY

SERIES 25
TO PREVENT AND CONTROL AIR POLLUTION FROM HAZARDOUS WASTE TREATMENT, STORAGE, OR DISPOSAL FACILITIES

§45-25-1. General.

1.1. Scope.

1.1.a. The intent and purpose of this rule is to establish a program of regulation over air emissions from the treatment, storage and disposal of hazardous wastes in order to achieve and maintain such levels of air quality as will protect the public health and safety and the environment from the effects of improper, inadequate, or unsound treatment, storage, or disposal of hazardous wastes. Further, all persons engaged in the treatment, storage, or disposal of hazardous waste shall give careful consideration to the effects of the resultant emissions on the air quality or the areas affected by such any hazardous waste or constituent thereof in such quantities as to cause ambient air concentrations which may be injurious to human health or welfare which would interfere with the enjoyment of life or property.

1.1.b. The requirements of this rule apply to all owners and operators of hazardous waste treatment, storage, and disposal facilities as provided in the federal rules that are incorporated by reference herein.

1.1.c. Neither compliance with the provisions of this rule nor the absence of specific language to cover particular situations constitutes approval or implies consent or condonement of any emission which is released in any locality in such manner or amount as to cause or contribute to statutory air pollution. Neither does it exempt nor excuse anyone from complying with other applicable laws, ordinances, regulations, or orders of governmental entities having jurisdiction over hazardous waste treatment, storage or disposal facilities.

1.1.d. This rule is promulgated pursuant to W.Va. Code §§22-18-1 et seq., and §§22-5-1 et seq. Recognizing that each Chapter has its own enforcement sections, it is the intent of the Director that enforcement shall be implemented in accordance with W. Va. Code §§22-18-1 et seq., where practicable.

1.1.e. Permit applications filed pursuant to this rule shall be processed in accordance with the permitting procedures as set

forth in W. Va. Code §§22-18-1 et seq., and this rule.

1.2. Authority. -- W.Va. Code §§22-5-1 et seq. and §§22-18-1 et seq.

1.3. Filing Date. -- ~~May 30, 1997~~

1.4. Effective Date. -- ~~June 1, 1997~~

1.5. Incorporation By Reference.

1.5.a. This rule incorporates by reference the provisions contained in the Code of Federal Regulations as listed in Table 25-A. Unless otherwise indicated, where reference to a federal regulation or standard appears in this rule, such regulation or standard will for purposes of this rule, be construed as that version which was in effect as of July 1, 199~~6~~7.

1.5.b. This rule also incorporates by reference the provisions contained in ~~47~~33 CSR ~~35~~20, effective June 1, 199~~6~~7.

~~1.5.c. This rule also incorporates by reference the provisions of 40 CFR part 264 and 265 subparts AA, BB and CC as amended and published as a final rule on November 25, 1996, at 61 federal register 59932.~~

§45-25-2. Definitions.

2.1. "Air Pollutants" means solids, liquids, or gases which, if discharged into the air, may result in statutory air pollution.

2.2. "Air Pollution", 'statutory air pollution' has the meaning ascribed to it in W. Va. Code §22-5-2.

2.3. "Air Pollution Control Equipment" means any equipment used for collecting or converting hazardous waste emissions for the purpose of preventing or reducing emissions of these materials into the open air from hazardous waste treatment, storage, or disposal facilities.

2.4. "BACT", 'Best Available Control Technology' means an emissions limitation based on the maximum degree of reduction for each pollutant which would be emitted from any hazardous waste treatment, storage or disposal facility which the Director, on a case-by-case basis, taking into account energy, environmental and economic impacts and other costs, determines is achievable for such facility through application of production processes or available methods, systems, or techniques. If the Director determines that technological or economic limitations on the application of measurement methodology to a particular emissions unit would make the imposition of an emissions standard infeasible, a design,

equipment, work practice, operational standard or combination thereof, may be prescribed instead to satisfy the requirement for the application of best available control technology. Such standard shall, to the degree possible, set forth the emissions reduction achievable by implementation of such design, equipment, work practice or operation, and shall provide for compliance by means which achieve equivalent results.

2.5. "CAA" means the federal Clean Air Act, as amended; 42 U.S.C. §7401 et seq.

2.6. "CFR" means the Code of Federal Regulations published by the Office of the Federal Register, National Archives and Records Service, General Services Administration.

2.7. "CWA" means the Clean Water Act (formerly referred to as the Federal Water Pollution Control Act), Public Law 92-500, as amended by Public Law 95-217 and Public Law 95-576; 33 U.S. C. §1251 et seq.

2.8. "Director" means the Director of the West Virginia Division of Environmental Protection or such other person to whom the Director has delegated authority or duties pursuant to W. Va. Code §22-1-6 or §22-1-8.

2.9. "Division of Environmental Protection" or "DEP" means that Division of the West Virginia Division of Environmental Protection which is created by the provisions of W. Va. Code §§22-1-1 et seq.

2.10. "EPA" means the United States Environmental Protection Agency.

2.11. "Facility mailing list" means the mailing list for a facility maintained by EPA in accordance with 40 CFR 124.10(c)(1)(ix).

2.12. "Infectious Medical Waste" shall have the meaning ascribed to it in 64 CSR 56 "Infectious Medical Waste", (June 11, 1993), promulgated by the Division of Health.

2.13. "Particulate Matter" means any material, except uncombined water, that exists in a finely divided form as a liquid or solid.

2.14. "Pathological Waste Incinerator" means an incinerator used to thermally treat infectious medical waste.

2.15. "RCRA" means the federal Solid Waste Disposal Act as amended by the Resource Conservation and Recovery Act, as amended; 42 U.S.C. §6901 et seq.

2.16. "Steady State" means that all conditions at all points in the thermal treatment process are in stable, normal operating

conditions.

Other words or phrases not herein defined and used in this rule shall have the meaning as ascribed in W. Va. Code §§22-5-1 et seq., or W. Va. Code §§22-18-1 et seq., or ~~47~~33 CSR ~~35~~20 "Hazardous Waste Management Regulations" governing the State Hazardous Waste Management Act.

§45-25-3. Adoption By Reference.

3.1. Definitions, lists, tables, appendices, conditions, or requirements from ~~47~~33 CSR ~~35~~20 "Hazardous Waste Management Regulations", effective June 1, 199~~6~~7 are hereby adopted by reference.

3.1.a. In case of a conflict between the Office of Air Quality and the Office of Waste Management as to whether a material is a waste and if so, whether the material is a hazardous waste, the Director has final administrative authority to resolve the conflict.

3.2. The provisions contained in the Code of Federal Regulations (effective on July 1, 199~~6~~7, except as otherwise provided by section 1.5 of this rule), as listed in Table 25-A, are hereby adopted by reference, with the following modifications:

3.2.a. Whenever the term "United States" is used it shall also mean the State of West Virginia.

3.2.b. Whenever the terms "Administrator" or "Regional Administrator", "The Assistant Administrator for Solid Waste and Emergency Response" or "Director" is used, the term means the Director of the West Virginia Division of Environmental Protection.

3.2.c. Whenever the term "Environmental Protection Agency" is used in 40 CFR 266, the term also means the West Virginia Division of Environmental Protection.

3.2.d. The distance provisions of 40 CFR 265.382 apply only to the open burning or open detonation of military explosives in a manner that presents an uncontrolled fragment release hazard. The applicable distance provisions of the American Table of Distances for Commercial Explosives, effective June 19, 1991, and of the Department of Defense Contractors Safety Manual for Ammunition and Explosives (DOD 4145.26-M), as amended April 11, 1988, apply otherwise.

§45-25-4. Facility Requirements.

4.1. Owners and operators of hazardous waste treatment, storage, and disposal facilities regulated by the provisions of

this rule shall maintain a listing of all permits or construction approvals received or applied for under any of the following programs and their counterpart programs administered by the State, where appropriate:

4.1.a. Hazardous Waste Management Program under RCRA and ~~47~~33 CSR ~~35~~20;

4.1.b. Prevention of Significant Deterioration (PSD) Program under 45 CSR 14 or the Federal Clean Air Act;

4.1.c. Nonattainment program under West Virginia DEP, Office of Air Quality or the Federal Clean Air Act and 45 CSR 19;

4.1.d. National Emission Standards for Hazardous Pollutants (NESHAP) preconstruction approval under 45 CSR 15 or the Federal Clean Air Act;

4.1.e. Standards of Performance for New Stationary Sources under 45 CSR 16 or the Federal Clean Air Act; and

4.1.f. Other relevant air pollution control permits including local permits.

4.2. Owners and operators of hazardous waste treatment, storage and disposal facilities covered under this rule shall comply with the personnel training requirements as specified by 40 CFR 264.16. An outline of the training program and a description of how the training program is designed to meet actual job tasks must be submitted to the Director with Part B of the permit application.

4.3. Owners and operators of hazardous waste tanks, containers, surface impoundments, landfills, waste piles, land treatment, miscellaneous units, thermal treatment units, incinerators, and boiler and industrial furnace facilities must design, construct, maintain, and operate such facilities to minimize the possibility of a fire, explosion, or any unplanned, sudden, or non-sudden release of hazardous waste constituents to the air which could threaten human health or the environment.

4.4. Owners and operators of hazardous waste management facilities that treat, store, or dispose of ignitable or reactive wastes, or mix incompatible waste or incompatible wastes and other materials, must prevent reactions which:

4.4.a. Produce uncontrolled toxic mists, fumes, dust or gases in sufficient quantities to threaten human health or the environment, and

4.4.b. Produce uncontrolled flammable fumes or gases in sufficient quantities to pose a risk of fire or explosion.

4.5. The owners and operators of the hazardous waste treatment, storage and disposal facilities shall manage all hazardous waste placed in a container in accordance with the applicable air emission standard requirements of 40 CFR 264 and 265 including but not limited to subpart CC.

4.6. The owners and operators of the hazardous waste treatment, storage and disposal facilities shall manage all hazardous waste placed in a tank in accordance with the applicable air emission standard requirements of 40 CFR 264 and 265 including but not limited to subparts AA, BB and CC.

4.7. The owners and operators of the hazardous waste treatment, storage and disposal facilities shall manage all hazardous waste placed in a surface impoundment in accordance with the applicable air emission standard requirements of 40 CFR 264 and 265 including but not limited to subpart CC.

4.8. The owners and operators of the hazardous waste treatment, storage and disposal facilities shall manage all hazardous waste placed in a miscellaneous unit in accordance with the applicable air pollution standard requirements of 40 CFR 264 including but not limited to subparts AA, BB, and CC.

4.9. A hazardous waste pile must be fully enclosed or otherwise designed to prevent dispersal of the waste by wind.

4.10. Hazardous waste landfills must be covered or otherwise managed to prevent wind dispersal of the waste.

4.11. All landfills, surface impoundments, and land treatment facilities shall be located, designed, constructed, operated, maintained, and closed in a manner that will assure protection of human health and the environment. Protection of human health and the environment shall include prevention of adverse effects on air quality considering:

4.11.a. The volume and physical and chemical characteristics of the waste in the facility, including its potential for volatilization and wind dispersal;

4.11.b. The existing quality of the air, including other sources of contamination and their cumulative impact on the air;

4.11.c. The potential for health risks caused by human exposure to waste constituents;

4.11.d. The potential damage to wildlife, crops, vegetation, and physical structures caused by exposure to waste constituents;

4.11.e. The potential for interference with the enjoyment of life or property; and

4.11.f. The persistence and permanence of such potential adverse effects.

4.12. Owners and operators of hazardous waste treatment, storage, or disposal facilities shall utilize best available control technology ("BACT") to limit the discharge of hazardous waste constituents to the atmosphere during:

4.12.a. Process turn-arounds;

4.12.b. Cleaning of process equipment;

4.12.c. Planned process shutdowns; and

4.12.d. Tank truck, railroad tank car, and barge cleaning.

4.13. The Director may, on a case-by-case basis, establish performance standards for hazardous waste incinerators for control of emissions of metals, hydrogen halides, and elemental halogen, based on a finding that such standards are necessary to limit the emission rates of these constituents to levels which do not pose an unacceptable risk to human health and environment. The Director may require the following data from the permit applicant:

4.13.a. Emissions of POHCs, hazardous combustion by-products, metals and hydrogen halides, including:

4.13.a.1. Mass emission rates from the stack, and

4.13.a.2. Concentration in the gas stream exiting the stack; and

4.13.b. Air dispersion estimates for those substances, including:

4.13.b.1. Meteorological data, and

4.13.b.2. Description of the air dispersion models, and

4.13.b.3. Assumptions underlying the air dispersion models used; and

4.13.c. Expected human and environmental exposure, including:

4.13.c.1. Topographic considerations,

4.13.c.2. Population distributions,

4.13.c.3. Population activities, and

4.13.c.4. Modes, intensity, and duration of exposure; and

4.13.d. Consequences of exposure, including:

4.13.d.1. Dose-response curves for carcinogens,

4.13.d.2. Health effects based on human or animal studies for other toxic constituents,

4.13.d.3. Potential for accumulation of toxic constituents in the human body, and

4.13.d.4. Statements of expected risk to individuals or populations.

4.14. Emergency Permit. Notwithstanding any other provision in 40 CFR 270.61, in the event the Director finds an imminent and substantial danger to human health or the environment, the Director may issue a temporary permit to a facility to allow treatment, storage, or disposal of hazardous waste at a non-permitted facility, or hazardous waste not covered by the permit for a facility with an effective permit. This emergency permit:

4.14.a. May be oral or written. If oral, it shall be followed within five (5) days by written emergency permit;

4.14.b. Shall not exceed ninety (90) days in duration;

4.14.c. Shall clearly specify the hazardous wastes to be received, and the manner and location of the treatment, storage, or disposal;

4.14.d. May be terminated by the Director at any time without prior notice if it is determined that termination is appropriate to protect human health or the environment; and

4.14.e. Shall be accompanied by public notice as described under Section 7 of this rule and shall include the following:

4.14.e.1. Name and address of the office granting the emergency authorization,

4.14.e.2. Name and location of the permitted hazardous waste management facility,

4.14.e.3. A brief description of the wastes involved,

4.14.e.4. A brief description of the action authorized and reasons for authorizing it,

4.14.e.5. Duration of the emergency permit; and

4.14.f. Shall incorporate, to the extent possible and not inconsistent with the emergency situation, all applicable

requirements of this rule.

4.15. Pathological Waste Incinerators. The owner and operator of a pathological waste incinerator is not subject to the requirements of this regulation. However, mixtures of infectious medical waste and hazardous waste listed in 40 CFR 261 Subpart D are subject to the requirements of this rule and the owner and operator of such a facility shall design, construct and operate the facility in accordance with all other applicable regulations promulgated by the Director, including, but not limited to, 45 CSR 6 and 45 CSR 13.

§45-25-5. Exclusion and Exemptions.

5.1. Wastes and/or materials excluded in ~~47~~33 CSR ~~35~~20, are also excluded from the requirements of this rule.

5.2. Except for recyclable materials exempt pursuant to Section 3 of ~~47~~33 CSR ~~35~~20, hazardous wastes that are stored prior to recycling are subject to all applicable provisions of Section 4 of this rule.

§45-25-6. Confidential Information.

6.1. Any records, reports, or information and any permit, permit applications, and related documents within the Director's possession shall be available to the public for inspection and copying: provided, however, that upon satisfactory showing to the Director that such records, reports, permit documentation, or information, or any part thereof would, if made public, divulge methods or processes, or activities, entitled to protection as trade secrets, the Director shall consider, treat, and protect such records as confidential pursuant to W. Va. Code §22-18-1 et seq., and §22-5-1 et seq.

§45-25-7. Public Participation.

Public notice of the preparation of a draft permit shall be given by the methods contained in ~~47~~33 CSR ~~35~~20 Section 11, and 40 CFR 270.2, 270.14, 270.30, 270.62, and 270.66.

§45-25-8. Application Fees.

8.1. Any person who applies for a permit for the construction and/or operation of an air emitting hazardous waste treatment, storage, or disposal facility shall submit as part of said application a money order or cashier's check payable to the "Air Pollution Control Fund" of the State Treasury. Such fee shall be determined by the schedule set forth below:

ACTIVITY FEES

a. Hazardous Waste Management Facilities

Treatment design capacity more than 1,000 ton/yr	$5,000
Treatment design capacity less than 1,000 ton/yr	$5,000

b. Major Modifications or Renewals of Permits for Hazardous Waste Management Facilities $1,000

All fees required under this section shall be in addition to fees required under any other rule of the West Virginia Division of Environmental Protection.

§45-25-9. Inconsistency Between Rules.

In the event of any inconsistency between this rule and any other rule of the West Virginia Division of Environmental Protection, such inconsistency shall be resolved by the determination of the Director and such determination shall be based upon the application of the more stringent provision, term, condition, method and rule.

45CSR25

TABLE 25-A

Item No.	CFR No.		Part No.		Subpart No.		Title
1.	40 CFR	-	264, 265	-	O	-	Incinerator
2.		-	270.19	-	B	-	Specific Requirements for Incinerators
3.		-	270.62	-	F	-	Hazardous Waste Incinerator Permits
4.	40 CFR	-	264	-	X	-	Miscellaneous Units
5.		-	270.23	-	B	-	Specific Requirements for Miscellaneous Units
6.	40 CFR	-	264, 265	-	AA	-	Air Emission Standards for Process Vents
7.		-	270.24	-	B	-	Specific Requirements for Process Vents
8.	40 CFR	-	264, 265	-	BB	-	Air Emission Standards for Equipment Leaks
9.		-	270.25	-	B	-	Specific Requirements for Equipments Leaks
10.	40 CFR	-	264, 265, 270	-	CC	-	Organic Air Emission Standards for Tanks, Surface Impoundments, and Containers
11.	40 CFR	-	265	-	P	-	Thermal Treatment
12.	40 CFR	-	266	-	H	-	Hazardous Waste Burned in Boilers and Industrial Furnaces

Item No.	CFR No.		Part No.		Subpart No.		Title
13.		-	270.22	-	B	-	Specific Requirements for Boilers and Industrial Furnaces Burning Hazardous Wastes
14.		-	270.66	-	F	-	Permits for Boiler and Industrial Furnaces Burning Hazardous Waste
15.	40 CFR	-	279.23	-	C	-	On-site Burning In Space Heater
16.		-	279.60 279.61	-	G	-	Standards for Used Oil Burners Who Burn Off-Specification Used Oil for Energy Recovery
		-	279.62 279.63				
17.		-	270.14(b)(22)	-	B	-	Part B application General Requirements
18.		-	270.30(m)	-	B	-	Information repository

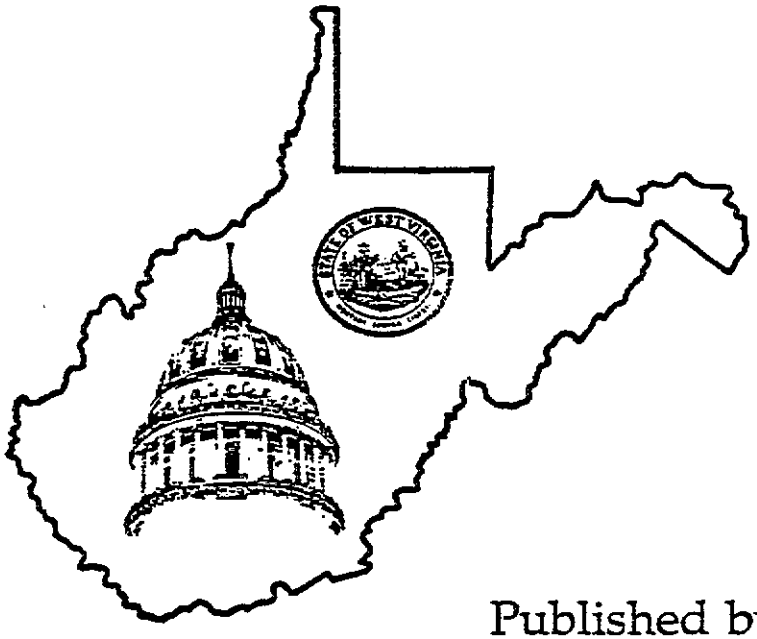

WEST VIRGINIA REGISTER

Published by Ken Hechler, Secretary of State

Volume XIV

Issue 25

June 19, 1997

Pages 959-996

A Weekly Publication

Administrative Law Division

Judy Cooper
Director

Lisa Blake
Leah Powell
Administrative Assistants

Secretary of State
Administrative Law Division
Bldg. 1, Suite 157K
1900 Kanawha Blvd. E.
Charleston, WV 25305-0770

(304)558-6000

CONTENTS

I. Chronological Index

II. Open Government Meetings Listing

III. Price List

IV. Rule Monitor

V. Notices

- *a. Legislative Rules*
- *b. Interpretive Rules*
- *c. Procedural Rules*
- *d. Emergency Rules*
- *e. Legislative Rule-Making Review Committee*

VI. Legislative Interims

VII. Orders

IX. Ethics Commission Opinions

X. Attorney General Opinions

XI. Other Documents or Information Filed

XII. Publication Deadlines and Publication Dates

LEGISLATIVE

WEST VIRGINIA
SECRETARY OF STATE
KEN HECHLER
ADMINISTRATIVE LAW DIVISION

Do Not Mark In This Box
FILED
JUN 17 4 00 PM '97
OFFICE OF WEST VIRGINIA SECRETARY OF STATE

FORM #1

NOTICE OF PUBLIC HEARING ON A PROPOSED RULE

AGENCY: Division of Environmental Protection, Office of Air Quality TITLE NUMBER: 45

RULE TYPE: Legislative ; CITE AUTHORITY W.Va. Code §§22-5-1 et seq.

AMENDMENT TO AN EXISTING RULE: YES ____ NO X

IF YES, SERIES NUMBER OF RULE BEING AMENDED: 23

TITLE OF RULE BEING AMENDED: "To Prevent and Control Emissions From Municipal Solid Waste Landfills"

IF NO, SERIES NUMBER OF NEW RULE BEING PROPOSED: ____

TITLE OF RULE BEING PROPOSED: ____

DATE OF PUBLIC HEARING: July 21, 1997 TIME: 6:00 p.m.

LOCATION OF PUBLIC HEARING: Office of Air Quality
1558 Washington Street, East
Charleston, West Virginia 25311

COMMENTS LIMITED TO: ORAL ____, WRITTEN ____, BOTH X

COMMENTS MAY ALSO BE MAILED TO THE FOLLOWING ADDRESS: John H. Johnston, Chief
Office of Air Quality
1558 Washington Street, East
Charleston, WV 25311

The Department requests that persons wishing to make comments at the hearing make an effort to submit written comments in order to facilitate the review of these comments.

The issues to be heard shall be limited to the proposed rule.

ATTACH A BRIEF SUMMARY OF YOUR PROPOSAL

John H. Johnston
Authorized Signature

WEST VIRGINIA
SECRETARY OF STATE
KEN HECHLER
ADMINISTRATIVE LAW DIVISION

Do Not Mark In This Box
FILED
JUN 17 3 58 PM '97
OFFICE OF WEST VIRGINIA SECRETARY OF STATE

FORM #1

NOTICE OF PUBLIC HEARING ON A PROPOSED RULE

AGENCY: Division of Environmental Protection, Office of Air Quality TITLE NUMBER: 45

RULE TYPE: Legislative ; CITE AUTHORITY W.Va. Code §§22-5-1 et seq. & §§22-18-1 et seq.

AMENDMENT TO AN EXISTING RULE: YES X NO ____

IF YES, SERIES NUMBER OF RULE BEING AMENDED: 25

TITLE OF RULE BEING AMENDED: "To Prevent and Control Air Pollution from Hazardous Waste Treatment, Storage, or Disposal Facilities"

IF NO, SERIES NUMBER OF NEW RULE BEING PROPOSED: ____

TITLE OF RULE BEING PROPOSED: ____

DATE OF PUBLIC HEARING: July 21, 1997 TIME: 6:00 p.m.

LOCATION OF PUBLIC HEARING: Office of Air Quality
1558 Washington Street, East
Charleston, West Virginia 25311

COMMENTS LIMITED TO: ORAL ____, WRITTEN ____, BOTH X

COMMENTS MAY ALSO BE MAILED TO THE FOLLOWING ADDRESS: John H. Johnston, Chief
Office of Air Quality
1558 Washington Street, East
Charleston, WV 25311

The Department requests that persons wishing to make comments at the hearing make an effort to submit written comments in order to facilitate the review of these comments.

The issues to be heard shall be limited to the proposed rule.

ATTACH A BRIEF SUMMARY OF YOUR PROPOSAL

John H. Johnston
Authorized Signature

$5.60

DIVISION OF ENVIRONMENTAL PROTECTION

CECIL H. UNDERWOOD
GOVERNOR

1558 Washington Street East
Charleston, WV 25311-2599

JOHN E. CAFFREY
DIRECTOR

June 16, 1997

Ms. Robin Clark
Charleston Newspapers
Legal Ad Department
1001 Virginia Street, East
Charleston, WV 25301

Dear Ms. Clark:

Please publish the attached "Notice of Public Hearing and Public Comment Period" as soon as possible as a Class I legal advertisement. The publication must occur no later than Friday, June 20, 1997 and must not be published on Sunday as a matter of law. If you have any questions regarding this matter, please contact Tammy Mowrer at 558-2275.

You may submit your invoice and a tear sheet to the attention of Ms. Nadine Sitton, 1558 Washington Street, East, Charleston, West Virginia 25311.

Sincerely yours,

John H. Johnston
tlm

John H. Johnston
Chief, Office of Air Quality

JHJ/tlm

Enclosure

Office of Air Quality
Phone: (304) 558-4022 Fax: (304) 558-3287

NOTICE OF PUBLIC HEARING AND
PUBLIC COMMENT PERIOD

On Monday, July 21, 1997 beginning at 6:00 p.m., the West Virginia Division of Environmental Protection, Office of Air Quality will hold a public hearing on proposed revisions to the following legislative rules:

45CSR23 "To Prevent and Control Emissions from Municipal Waste Solid Landfills"

45CSR25 "To Prevent and Control Air Pollution From Hazardous Waste Treatment, Storage, or Disposal Facilities"

45CSR33 "Acid Rain Provisions and Permits"

45CSR34 "Emission Standards for Hazardous Air Pollutants Pursuant to 40 CFR Part 63"

Upon authorization and promulgation of revisions to 45CSR33 and 45CSR34, the Office of Air Quality will seek federal delegation of authority from the U. S. Environmental Protection Agency to implement and enforce the revised standards.

Upon authorization and promulgation of revisions to 45CSR23 and 45CSR25, the rule will be submitted to the U. S. Environmental Protection Agency as part of the State Hazardous Waste Management Program.

The hearing will be held in the Office of Air Quality's Conference Room located at 1558 Washington Street East, Charleston, West Virginia. The hearing is open to the public. Written and oral comments by the public will be accepted during the hearing on July 21st and will be made a part of the rulemaking record. The public may also submit written comments by mail or other delivery to the Office of Air Quality through July 21st for inclusion in the rulemaking record at the following address:

John Johnston, Chief
Office of Air Quality
1558 Washington Street East
Charleston, WV 25311-2599

Copies of the proposed legislative rules will be available for public review on or before June 19, 1997 at the Office of Air Quality's Charleston office. The proposed legislative rules will also be available for public review on or before June 19, 1997 at the Office of Air Quality's regional offices located at 109 Adams Street, Room M-2, Fairmont; 1911 Warwood Avenue, Wheeling; and New Creek, WV.

CHARLESTON NEWSPAPERS
P.O. Box 2993
Charleston, West Virginia 25330
Billing 348-4898
Classified 348-4848
1-800-WVA-NEWS
FEIN 55-0676079

INVOICE DATE	06/20/97
ACCOUNT NBR	037143002
SALES REP ID	0016
INVOICE NBR	437654001

Legal pricing is based upon 67 words per column inch at a rate of $.0925 per word
Each successive insertion is discounted by 25% of the first insertion rate ($.069375 per word

ISSUE DATE	AD TYPE	PUB	DESCRIPTION / REFERENCE NBR PURCHASE ORDER #	AD NUMBER	AD SIZE / TOTAL RUN	RATE	GROSS AMOUNT	NET AMOUNT
06/19	LEGF	GZ	PUBLIC HEARING 437654001	L371373	1X0738 7.38	6.19	45.69	
06/19	LEGF	DM	PUBLIC HEARING 437654001	L371373	1X0738 7.38	6.19	45.69	91.38
			TOTAL INVOICE AMOUNT					91.38

State of West Virginia.

AFFIDAVIT OF PUBLICATION

I, Sandra Legg of
THE CHARLESTON GAZETTE, A DAILY DEMOCRATIC NEWSPAPER,
THE DAILY MAIL, A DAILY REPUBLICAN NEWSPAPER,
published in the city of Charleston, Kanawha County, West Virginia, do solemnly swear that the annexed notice of:
PUBLIC HEARING
was duly published in said paper(s) during the dates listed below, and was posted at the front door of the court house of said Kanawha County West Virginia, on the 20TH day of JUNE 1997. Published during the following dates: 06/19/97-06/19/97.
Subscribed and sworn to before me this 23 day of June
Printers fee $ 91.38

Notary Public of Kanawha County, West Virginia

NOTICE OF HEARING AND PUBLIC COMMENT PERIOD

On Monday, July 21, 1997 beginning at 6:00 p.m., the West Virginia Division of Environmental Protection, Office of Air Quality will hold a public hearing on proposed revisions to the following legislative rules:

45CSR23 "To Prevent and Control Emissions from Municipal Waste Solid Landfills"

45CSR25 "To Prevent and Control Air Pollution From Hazardous Waste Treatment, Storage, or Disposal Facilities"

45CSR33 "Acid Rain Provisions and Permits"

45CSR34 "Emission Standards for Hazardous Air Pollutants Pursuant to 40 CFR Part 63"

Upon authorization and promulgation of revisions to 45CSR33 and 45CSR34, the Office of Air Quality will seek federal delegation of authority from the U.S. Environmental Protection Agency to implement and enforce the revised standards.

Upon authorization and promulgation of revisions to 45CSR23 and 45CSR25, the rule will be submitted to the U.S. Environmental Protection Agency as part of the State Hazardous Waste Management Program.

The hearing will be held in the Office of the Air Quality's Conference Room located at 1558 Washington Street East, Charleston, West Virginia. The hearing is open to the public. Written and oral comments by the public will be accepted during the hearing on July 21st and will be made a part of the rulemaking record. The public may also submit written comments by mail or other delivery to the Office of Air Quality through July 21st for inclusion in the rulemaking record of the following address:

John Johnston
Office of Air Quality
1558 Washington Street, E.
Charleston, WV 25311-2599

Copies of the proposed legislative rules will be available for public review on or before June 19, 1997 at the Office of Air Quality's Charleston office. The proposed legislative rules will also be available for public review on or before June 19, 1997 at the Office of Air Quality's regional offices located at 109 Adams Street, Room M-2, Fairmont; Warwood Avenue, Wheeling; and New Creek, WV.

(371373)

The items listed hereon conform to specification, were received and are approved for payment.
Date 06-23-97 Signed: N. Ditton

GRANT #:		PROJECT #:	SWC NAME:
			SCO #:
CLAIM # 4	Vendor # 550-676-079		Off Appr Date
PO #			
OS #	VENDOR # 50997		

FIMS FUND	FIMS ACT	FIMS OBJ	FIMS ACT	FIMS OBJ CODE	OFF/FC/PC
3336	1997	9310	099	035	5-537-503

DEP Division of Environmental Protection

Sign-In

Hearing on 45CSR23, 45CSR25, 45CSR33, & 45CSR34

July 21, 1997

Name (please print)	Address
1. JOHN JOHNSTON	WVDEP - OAQ
2. STEPHEN L. CARPENTER	" "
3. Karen Watson	" "
4. Lucy Pontiveros	" "
5.	
6.	
7.	
8.	
9.	
10.	
11.	
12.	
13.	
14.	
15.	
16.	
17.	
18.	
19.	

BEFORE THE WEST VIRGINIA DIVISION OF
ENVIRONMENTAL PROTECTION
OFFICE OF AIR QUALITY

ORIGINAL

In the matter of:

PUBLIC HEARING ON PROPOSED LEGISLATIVE RULE

45 CSR 25 "To Prevent and Control Air Pollution from Hazardous Waste Treatment, Storage or Disposal Facilities"

Transcript of proceedings had at a public hearing in the above-styled matter taken by Paula J. Moore, Certified Court Reporter and Notary Public, at the West Virginia Division of Environmental Protection, Office of Air Quality, Conference Room, 1558 Washington Street, East, Charleston, West Virginia, 25305, commencing at 6:05 p.m. and concluding at 6:07 p.m., the 21st day of July 1997, pursuant to notice.

FORM CSR - LASER REPORTERS PAPER & MFG. CO. 800-626-6313

1 **P R O C E E D I N G S**

2 MS. CHANDLER: This public hearing will
3 now come to order on this 21st day of July, 1997, in the
4 conference room of the West Virginia Division of
5 Environmental Protection, Office of Air Quality, located
6 at 1558 Washington Street, East, Charleston, West
7 Virginia.

8 The purpose of the public hearing is to
9 hear discussions on the proposed rules filed in the
10 Secretary of State's Office on June 17, 1997 and noticed
11 in the State Register on June 19, 1997. The legislative
12 rules are 45 CSR 23, 45 CSR 25, 45 CSR 33 and 45 CSR 34.
13 The rules were noticed in a Class I legal advertisement in
14 both the Charleston Daily Mail and Charleston Gazette, and
15 notice was also sent to various individuals and
16 organizations. This public hearing is being held pursuant
17 to the provisions of 29A of the West Virginia Code and
18 Section 110 of the Clean Air Act.

19 By way of introduction, my name is Jeanne
20 Chandler of the Public Information Office of the West
21 Virginia Division of Environmental Protection. I will be
22 the moderator for these proceedings.

23 In order to obtain separate transcripts

FORM CSR - LASER REPORTERS PAPER & MFG. CO. 800-626-6313

for each of the rules, the hearing procedure this evening will be to introduce each rule individually, allow time for oral comments and close the hearing for that particular rule. Written comments for any rule may be submitted at the end of the public hearing tonight.

For those of you wishing to make formal comments, a sign-up sheet was provided on the counter at the front desk. Please sign up now if you have not already done so. I remind you that the comment period will end at the close of the public hearing.

The court reporter is Paula J. Moore, Q & A Court Reporters, Incorporated. If anyone desires a transcript of these proceedings, please contact Ms. Moore at 937-2555.

The purpose of the public hearing is to hear discussions on proposed rule 45 CSR 25, "To Prevent and Control Air Pollution from Hazardous Waste Treatment, Storage or Disposal Facilities." The current version of 45 CSR 25 establishes a program of regulation over the treatment, storage and disposal of hazardous wastes in order to achieve and maintain such levels of air quality as will protect the public health and safety and the environment from the effects of improper, inadequate or

FORM CSR - LASER REPORTERS PAPER & MFG. CO. 800-626-6313

unsound treatment, storage or disposal of hazardous wastes.

The proposed rule changes are required to reflect the Office of Waste Management's newly revised regulations at 33 CSR 20, formerly 47 CSR 35. The proposed changes will maintain consistency of this rule with the Office of Waste Management's current regulations and with the current federal rule.

Upon authorization and promulgation of revisions to 45 CSR 25, the rule will be submitted to the United States Environmental Protection Agency as part of the State Hazardous Waste Management Program.

The floor is now open for public comment. Please identify yourself and affiliation, if any, prior to making comments.

(No public comment.)

There being nothing further, this public meeting for 45 CSR 25 is concluded.

(WHEREUPON, the public hearing was concluded at 6:07 p.m.)

FORM CSR - LASER REPORTERS PAPER & MFG. CO. 800-626-6313

BEFORE THE WEST VIRGINIA DIVISION OF
ENVIRONMENTAL PROTECTION
OFFICE OF AIR QUALITY

STATE OF WEST VIRGINIA,

COUNTY OF PUTNAM, to-wit:

I, the undersigned, Paula, J. Moore, a Certified Court Reporter and Notary Public within and for the State of West Virginia, duly commissioned and qualified, do hereby certify that the foregoing is, to the best of my skill and ability, a true and accurate transcript of all the proceedings had in the aforementioned matter.

Given under my hand and official seal this 24th day of July 1997.

Paula J. Moore

Certified Court Reporter
Notary Public

OFFICIAL SEAL
NOTARY PUBLIC
STATE OF WEST VIRGINIA
PAULA J. MOORE
223 NASH LANE
BUFFALO, WV 25033
My Commission Expires November 12, 2006

My commission expires November 12, 2006.

FORM CSR - LASER REPORTERS PAPER & MFG. CO. 800-626-6313

Tammy
John J
Karen
Lucy
7/22/97
Sta

LAW OFFICES
ROBINSON & MCELWEE LLP
P. O. BOX 1791
CHARLESTON, WEST VIRGINIA 25326
TELEPHONE (304) 344-5800
TELEFAX (304) 344-9566
600 UNITED CENTER
500 VIRGINIA STREET, EAST
CHARLESTON, WEST VIRGINIA 25301

CLARKSBURG OFFICE
P.O. BOX 128
CLARKSBURG, WEST VIRGINIA 26302
TELEPHONE (304) 622-5022
TELEFAX (304) 622-5065

MICHAEL P. MCTHOMAS
DIRECT DIAL NO. (304) 347-8339
E-MAIL: mpm@ramlaw.com

W. DIV. OF ENVIR. PROT.
OFFICE OF AIR QUALITY
97 JUL 21 P 4: 32
RECEIVED

July 21, 1997

John H. Johnston, Chief
Office of Air Quality
1558 Washington Street, East
Charleston, West Virginia 25311

Re: 45 CSR 25

Dear John:

Attached please find the comments of the West Virginia Manufacturers Association on "Reg 25," "To Prevent and Control Air Pollution from Hazardous Waste Treatment, Storage, or Disposal Facilities" that was proposed by the Office of Air Quality. Since the OAQ has incorporated the federal rules by reference, the number of issues that arises on an annual basis has declined. We have identified only one minor technical change that warranted comment.

If you have any questions, or we may provide assistance to you, please let us know.

Very truly yours,

Michael P. McThomas
Counsel, West Virginia Manufacturers Association

c: Karen Price, President
West Virginia Manufacturers Association
Robert Foster, Chair
Environmental Safety and Health Committee

COMMENTS OF THE

WEST VIRGINIA MANUFACTURERS ASSOCIATION

ON THE

DIVISION OF ENVIRONMENTAL PROTECTION

OFFICE OF AIR QUALITY

TO PREVENT AND CONTROL AIR POLLUTION FROM HAZARDOUS WASTE TREATMENT, STORAGE, OR DISPOSAL FACILITIES

45 CSR 25

July 21, 1997

COMMENTS OF THE
WEST VIRGINIA MANUFACTURERS ASSOCIATION
ON THE
DIVISION OF ENVIRONMENTAL PROTECTION
OFFICE OF AIR QUALITY

TO PREVENT AND CONTROL AIR POLLUTION FROM HAZARDOUS WASTE TREATMENT, STORAGE, OR DISPOSAL FACILITIES 45 CSR 25

July 21, 1996

I. INTRODUCTION

The Office of Air Quality ("OAQ"), Division of Environmental Protection proposed for promulgation revisions to the "To Prevent and Control Air Pollution from Hazardous Waste Treatment, Storage, or Disposal Facilities," 45 CSR 25, also known as "Reg 25" on June 17, 1997. Comments of interested persons were due with the OAQ on July 21, 1997. A public hearing will be held and the public comment period expires on July 21, 1997.

The West Virginia Manufacturers Association ("WVMA") files these comments in accordance with the notice of proposed rule-making discussed above. The WVMA is an organization comprised of a large number of business, manufacturing, and other interests of all sizes located throughout West Virginia. WVMA members are subject to and greatly affected by environmental regulations such as the one now proposed by the Office of Air Quality, and have been interested and involved in legislative and regulatory effort that affect the WVMA community for years. The WVMA seeks to ensure the development of a reasonable and consistent regulatory program.

II. COMMENTS

A. Incorporation by Reference

The WVMA continues to support the incorporation of the federal rules by reference as required by W.Va. Code § 22-1-3. Incorporation by reference creates consistency between the federal and state regulatory requirements, avoids duplication and unnecessary lengthy state rules, and provides correlative guidance from the federal programs.

B. Technical Change

The provisions of 40 CFR part 264 and 265 subparts AA, BB and CC that were adopted by reference last year were retained, but a separate reference set forth in section 1.5.c of the state rule was left unchanged. [The OAQ may recall the need for incorporation of subsequently enacted federal changes to the emission standards that needed to be incorporated specifically to avoid conflict between the state and federal rules.] With the new incorporation date of July 1, 1997, the provisions of the federal change will be incorporated by section 1.5.a automatically. The WVMA does not envision any benefit of retaining a separate incorporation date for historical value or otherwise. Therefore, the WVMA asserts that the deletion of section 1.5.c is appropriate.

III. CONCLUSION

The WVMA is committed to ensuring reasonable regulatory standards, and in the spirit of continued cooperation, submits these comments in anticipation that the OAQ will give them due consideration. If the OAQ has any questions or if additional information is desired, please contact the WVMA at you earliest possible convenience.

Respectfully submitted this 21st day of July, 1997.

Karen S. Price, President
West Virginia Manufacturers Association
2001 Quarrier Street
Charleston, West Virginia 25311
(304) 342-2123

Prepared by:
Robinson & McElwee
P.O. Box 1791
Charleston, West Virginia 25326
Contact: Michael P. McThomas, Esquire
(304) 347-8339

45CSR25

TO PREVENT AND CONTROL AIR POLLUTION FROM HAZARDOUS WASTE TREATMENT, STORAGE, OR DISPOSAL FACILITIES

RESPONSE TO COMMENTS

At the public hearing on proposed revisions to 45CSR25 conducted on July 21, 1997, no one submitted oral comments. The Division of Environmental Protection Office of Air Quality (OAQ) did, however, receive one written comment on the rule from the West Virginia Manufacturers Association. The OAQ has summarized this comment and provides the following response.

Commenter: West Virginia Manufacturers Association

COMMENT: *Incorporation by Reference.*
The commenter proposed a minor technical change be made to delete a section which is no longer necessary.

RESPONSE: The OAQ agrees with the comment and has deleted section 1.5.c of the proposed rule.

CHAPTER I—ENVIRONMENTAL PROTECTION AGENCY

SUBCHAPTER C—AIR PROGRAMS

PART 72—PERMITS

Proposed Regulation(s) Preamble(s)

HISTORY: 40 CFR 72; 58 FR 3650, Jan. 11, 1993; Amended at 58 FR 15647, March 23, 1993; corrected at 58 FR 33770, June 21, 1993; 58 FR 40746, July 30, 1993; amended 59 FR 60229, Nov. 22, 1994; 59 FR 60238, Nov. 22, 1994; 60 FR 17111, April 4, 1995; 60 FR 18468, April 11, 1995; 60 FR 26513, May 17, 1995

AUTHORITY:
42 U.S.C. 7651, *et seq.*

[Amended at 59 FR 60229, Nov. 22, 1994; 60 FR 17111, April 4, 1995; 60 FR 18468, April 11, 1995; 60 FR 26513, May 17, 1995; 60 FR 26513, May 17, 1995]

Subpart A—Acid Rain Program General Provisions

40 CFR 72.1 Purpose and scope.

(a) *Purpose.* The purpose of this part is to establish certain general provisions and the operating permit program requirements for affected sources and affected units under the Acid Rain Program, pursuant to title IV of the Clean Air Act, 42 U.S.C. 7401, et seq., as amended by Public Law 101-549 (November 15, 1990).

(b) *Scope.* The regulations under this part set forth certain generally applicable provisions under the Acid Rain Program. The regulations also set forth requirements for obtaining three types of Acid Rain permits, during Phases I and II, for which an affected source may apply: Acid Rain permits issued by the United States Environmental Protection Agency during Phase I; the Acid Rain portion of an operating permit issued by a State permitting authority during Phase II; and the Acid Rain portion of an operating permit issued by EPA when it is the permitting authority during Phase II. The requirements under this part supplement, and in some cases modify, the requirements under part 70 of this chapter and other regulations implementing title V for

Copyright 1993-1997, The Bureau of National Affairs, Inc.

Endnotes

1 (Popup)

[1] In the case of a transfer unit that shares a common stack with a unit not listed in Table 1 of §73.10(a) of this chapter and whose emissions of sulfur dioxide are not monitored separately or apportioned in accordance with part 75 of this chapter, the projected figures for the transfer unit under paragraph (c)(7) of this section must be for the units combined.

2 (Popup)

[2] In the case of a transfer unit that shares a common stack with a unit not listed in Table 1 of §73.10(a) of this chapter where the units are not monitored separately or apportioned in accordance with part 75 of this chapter, the combined emissions of both units will be deemed to be the transfer unit's emissions for purposes of applying paragraph (f)(1)(i) of this section.

3 (Popup)

[1] In these cases, if the limit was specified as the 'site' limit, the summer net dependable capability for the entire plant is used; otherwise, the summer net dependable capability for the unit is used. For units listed in the NADB, 'HEATRATE' shall be that listed in the NADB under that field and 'SUMNDCAP' shall be that listed in the NADB under that field. For units not listed in the NADB, 'HEATRATE' is the generator not full load heat rate reported on Form EIA-860 and 'SUMNDCAP' is the summer net dependable capability of the generator (in MWe) as reported on Form EIA-860.

4 (Popup)

[1] In these cases, if the limit was specified as the 'site' limit, the summer net dependable capability for the entire plant is used; otherwise, the summer net dependable capability for the unit is used. For units listed in the NADB, 'HEATRATE' shall be that listed in the NADB under that field and 'SUMNDCAP' shall be that listed in the NADB under that field. For units not listed in the NADB, 'HEATRATE' is the generator not full load heat rate reported on Form EIA-860 and 'SUMNDCAP' is the summer net dependable capability of the generator (in MWe) as reported on Form EIA-860.

Copyright 1993-1997, The Bureau of National Affairs, Inc.

$$\frac{\text{max. design heat input}}{3} \times \frac{\times 1 \text{ kw-hr}}{3413 \text{ Btu}} \times \frac{\times 1 \text{ MWe}}{1000 \text{ Kw}}$$

Subbituminous	35
Lignite	30

For oil, the yearly fuel burned is in gal/yr. If it is in bbl/yr, convert using 42 gal/bbl oil. The AP-42 factor (which accounts for the oil density), in lbs SO_2/thousand gal oil, is by oil type:

Oil Type	AP-42 factor
Distillate (light)	142 lbs/1,000 gal
Residual (heavy)	157

For all fuel, the units conversion factor is 1 ton/2000 lbs.

Appendix D to Part 72—Calculation of Potential Electric Output Capacity

[Appendix D added at 58 FR 15647, March 23, 1993]

The potential electrical output capacity is calculated from the maximum design heat input from the boiler by the following equation:

For example:

(1) Assume a boiler with a maximum design heat input capacity of 340 million Btu/hr.

(2) One-third of the maximum design heat input capacity is 113.3 mmBtu/hr. The one-third factor relates to the thermodynamic efficiency of the boiler.

(3) To express this in MWe, the standards conversion of 3413 Btu to 1 kw-hr is used:

113.3×10^6 Btu/hr$\times$1 kw-hr / 3413 Btu$\times$1 MWe / 1000 kw=33.2 MWe

Copyright 1993-1997, The Bureau of National Affairs, Inc.

Table B-1.--Conversion Factors

[Emission limits converted to lbs SO_2/MMBtu by multiplying as below]

Unit measurement	Plant fuel type: Bituminous coal	Subbituminous coal	Lignite coal	Oil
Lbs sulfur/MMBtu	2.0	2.0	2.0	2
% sulfur in fuel	1.66	2.22	2.86	1.
Ppm SO_2	0.00287	0.00384	.....	0.00167
Ppm sulfur in fuel	.....	.....	.....	0.003
Tons SO_2/hour	2,000,000/(HEATRATE*SUMNDCAP*capacity factor)[1](3)			
Lbs SO_2/hour	1,000/(HEATRATE*SUMNDCAP*capacity factor)[1](4)			

[1] In these cases, if the limit was specified as the 'site' limit, the summer net depen listed in the NADB under that field and 'SUMNDCAP' shall be that listed in the NADB und capability of the generator (in MWe) as reported on Form EIA-860.

Table B-2.--Assumed Average Energy Contents

Fuel Type	Average heat contents
Bituminous Coal	24 MMBtu/ton.
Subbituminous Coal	18 MMBtu/ton.
Lignite Coal	14 MMBtu/ton.
Residual Oil	6.2 MMBtu/ton.

Appendix C to Part 72—Actual 1985 Yearly SO_2 Emissions Calculation

The equation used to calculate the yearly SO_2 emissions (SO2) is as follows:

SO2 = (coal SO_2 emissions) + (oil SO_2 emissions) (in tons)

If gas is the only fuel, gas emissions are defaulted to 0.

Each fuel type SO_2 emissions is calculated on a yearly basis, using the equation:

fuel SO_2 emissions (in tons) = (yrly wtd. av. fuel sulfur %) × (AP-42 fact.) × (1-scrb. effic. %/100) × (units conver. fact.) × (yearly fuel burned)

For coal, the yearly fuel burned is in tons/yr and the AP-42 factor (which accounts for the ash retention of sulfur in coal), in lbs SO_2 ton coal, is by coal type:

Coal Type	AP-42 factor
Bituminous, anthracite	39 lbs/ton

Copyright 1993-1997, The Bureau of National Affairs, Inc.

emissions level would require a lower annual average SO_2 emission rate (or annual equivalent SO_2 limit) than would the shorter term statutory limit. EPA has selected a compliance level of one exceedance per 10 years. For example, an SO_2 emission limit of 1.2 lbs/MMBtu, enforced for a scrubbed unit over a 7-day averaging period, would result in an annualized SO_2 emission limit of 1.16 lbs/MMBtu. In general, the shorter the averaging period, the lower the annual equivalent would be. Thus, the annualization of limits is established by multiplying each federally enforceable limit by an annualization factor that is determined by the averaging period and whether or not it's a scrubbed unit.

Table A-1.--SO_x Emission Averaging Periods and Annualization Factors

Definition	Annualization factor Scrubbed unscrubbed Unit	Unit
Oil/gas unit.....	1.00	1.00
<=1 day.....	0.93	0.89
1 week.....	0.97	0.92
30 days.....	1.00	0.96
90 days.....	1.00	1.00
1 year.....	1.00	1.00
Not specified.....	0.93	0.89
At all times.....	0.93	0.89
Coat unit; No federal limit or limit unknown.....	1.00	1.00

Appendix B to Part 72—Methodology for Conversion of Emissions Limits

For the purposes of the Acid Rain Program, all emissions limits must be expressed in pounds of SO_2 per million British Thermal Unit of heat input (lb/mmBtu).

The factor for converting pounds of sulfur to pounds of SO_2 is based on the molecular weights of sulfur (32) and SO_2 (64). Limits expressed as percentage of sulfur or parts per million (ppm) depend on the energy content of the fuel and thus may vary, depending on several factors such as fuel heat content and atmospheric conditions. Generic conversions for these limits are based on the assumed average energy contents listed in Table A-2. In addition, limits in ppm vary with boiler operation (e.g., load and excess air); generic conversions for these limits assume, conservatively, very low excess air. The remaining factors are based on site-specific heat rates and capacities to develop conversions for Btu per hour. Standard conversion factors for residual oil are 42 gal/bbl and 7.88 lbs/gal.

Copyright 1993-1997, The Bureau of National Affairs, Inc.

(d) *Decision to Terminate.* If at any time before the end of the repowering extension the owners and operators decide to terminate good faith efforts to design, construct, and test the qualified repowering technology on the unit to be repowered under an approved repowering plan, then the designated representative shall submit a notice to the Administrator by the earlier of the end of the repowering extension or a date within 30 days of such decision, stating the date on which the decision was made.

40 CFR 72.95 Allowance deduction formula.

The following formula shall be used to determine the total number of allowances to be deducted for the calendar year from the allowances held in an affected unit's compliance subaccount as of the allowance transfer deadline applicable to that year:

Total allowances deducted=Tons emitted + Allowances surrendered for underutilization+Allowances deducted for Phase I extensions

where:

(a) "Tons emitted" is the total tons of sulfur dioxide emitted by the unit during the calendar year, as reported in accordance with part 75 of this chapter.

(b) "Allowances surrendered for underutilization" is the total number of allowances calculated in accordance with §72.92 (a) and (c).

(c) "Allowances deducted for Phase I extensions" is the total number of allowances calculated in accordance with §72.42(f)(1)(i).

40 CFR 72.96 Administrator's action on compliance certifications.

(a) The Administrator may review, and conduct independent audits concerning, any compliance certification and any othersubmission under the Acid Rain Program and make appropriate adjustments of the information in the compliance certifications and other submissions.

(b) The Administrator may deduct allowances from or return allowances to a unit's Allowance Tracking System account in accordance with part 73 of this chapter based on the information in the compliance certifications and other submissions, as adjusted.

Appendix A to Part 72—Methodology for Annualization of Emissions Limits

For the purposes of the Acid Rain Program, 1985 emissions limits must be expressed in pounds of SO_2 per million British Thermal Unit of heat input (lb/mmBtu) and expressed on an annual basis.

Annualization factors are used to develop annual equivalent SO_2 limits as required by §402(18) of the CAA. Many emission limits are enforced on a shorter term basis (or averaging period) than annually. Because of the variability of sulfur in coal and, in some cases, scrubber performance, meeting a particular limit with an averaging period of less than a year and at a specified statutory

Copyright 1993-1997, The Bureau of National Affairs, Inc.

governed by a Phase I extension plan shall include in the unit's annual compliance certification report for calendar year 1997, the start-up test results upon which the vendor is released from liability under the vendor certification of guaranteed sulfur dioxide removal efficiency under §72.42(c)(12).

40 CFR 72.94 Units with repowering extension plans.

(a) *Design and Engineering and Contract Requirements.* No later than January 1, 2000, the designated representative of a unit governed by an approved repowering plan shall submit to the Administrator and the permitting authority:

(1) Satisfactory documentation of a preliminary design and engineering effort.

(2) A binding letter agreement for the executed and binding contract (or for each in a series of executed and binding contracts) for the majority of the equipment to repower the unit using the technology conditionally approved by the Administrator under §72.44(d)(3).

(3) The letter agreement under paragraph (a)(2) of this section shall be signed and dated by each party and specify:

(i) The parties to the contract;

(ii) The date each party executed the contract;

(iii) The unit to which the contract applies;

(iv) A brief list identifying each provision of the contract;

(v) Any dates to which the parties agree, including construction completion date;

(vi) The total dollar amount of the contract; and

(vii) A statement that a copy of the contract is on site at the source and will be submitted upon written request of the Administrator or the permitting authority.

(b) *Removal From Operation to Repower.* The designated representative of a unit governed by an approved repowering plan shall notify the Administrator in writing at least 60 days in advance of the date on which the existing unit is to be removed from operation so that the qualified repowering technology can be installed, or is to be replaced by another unit with the qualified repowering technology, in accordance with the plan.

(c) *Commencement of Operation.* Not later than 60 days after the units repowered under an approved repowering plan commences operation at full load, the designated representative of the unit shall submit a report comparing the actual hourly emissions and percent removal of each pollutant controlled at the unit to the actual hourly emissions and percent removal at the existing unit under the plan prior to repowering, determined in accordance with part 75 of this chapter.

Copyright 1993-1997, The Bureau of National Affairs, Inc.

(D) and (F) of this section and the generation from the facility shall be treated, for purposes of this paragraph (c)(2)(v)as generation from units and generators within the dispatch system if the facility is within the dispatch system or as generation from units and generators outside the dispatch system if the facility is outside the dispatch system.

(3) Notwithstanding paragraphs (c)(2)(v)(F) (*1*) and (2) of this section, if the power production facility is authorized under federal or State law to use only natural gas as fuel, then the most stringent emissions limitation for the facility for the calendar year shall be deemed to be 0.0006 lbs/mmBtu.

(G) "Fraction of generation outside dispatch system" = 1-fraction of generation within dispatch system-fraction of generation from non-utility generators.

(H) "Fraction of non-Phase I and non- foreign generation in NERC region" is the portion of the NERC region's total sales generated by units and generators other than Phase I units or foreign sources in the unit's NERC region in 1985, as set forth in Table 1 of this section.

(I) "NERC region emissions rate" is the weighted average emission rate (in lbs/mmBtu) for the unit's NERC region in 1985, as set forth in Table 1 of this section.

Table 1.--NERC Region Generation and Emissions Rate in 1985

NERC region	Fraction of non-phase I and non-foreign generation in NERC region	NERC weighted average emissions rate (lbs/mmBtu)
WSCC	0.847	0.466
SPP	0.948	0.647
SERC	0.749	1.315
NPCC	0.423	1.058
MAPP	0.725	1.171
MAIN	0.682	1.495
MAAC	0.750	1.599
ERCOT	1.000	0.491
ECAR	0.549	1.564

[§72.92(c)(2)(v) revised at 60 FR 18468, April 11, 1995]

40 CFR 72.93 Units with Phase I extension plans.

Annual Compliance Certification Report. The designated representative for a control unit

Copyright 1993-1997, The Bureau of National Affairs, Inc.

Non-utility generator average emissions rate =

$$\sum_{i=1}^{n} N_i R_i \div \sum_{i=1}^{n} N_i$$

Where:

N_i = non-utility generation from a non-utility generator;

R_i = non-utility generator emissions rate for the calendar year for a non-utility generator, which shall equal the most stringent federally enforceable or State enforceable SO_2 emissions limitation applicable for the calendar year to such power production facility, as determined in accordance with paragraphs (c)(2)(v)(F) (*1*), (*2*), and (*3*) of this section; and

n = number of non-utility generators from which the dispatch system acquired non-utility generation. If n equals zero, then the non-utility generator average emissions rate shall be treated as zero only for purposes of paragraph (c)(2)(v) of this section.

Dispatch system emissions rate =

$$\sum_{i=1}^{k} g_i \, r_i \div \sum_{i=1}^{k} g_i$$

Where:

g_i = the difference between a Phase II unit's actual utilization for the calendar year and that Phase II unit's baseline. If that difference is less than or equal to zero, then the difference shall be treated as zero only for purposes of paragraph (c)(2)(v) of this section and that unit will be excluded from the calculation of dispatch system emissions rate. Notwithstanding the prior sentence, if the actual utilization of each Phase II unit for the year is equal to or less than the baseline, then g_i shall equal a Phase II unit's actual utilization for the year. Notwithstanding any provision in this paragraph (c)(2)(v)(B) to the contrary, if the actual utilization of each Phase II unit in the dispatch system is zero or there are no Phase II units in the dispatch system, then the dispatch system emissions rate shall equal the fraction of non-Phase I and non-foreign generation in the NERC region multiplied by the NERC region emissions rate.

r_i = a Phase II unit's emissions rate (in lbs/mmBtu), determined in accordance with part 75 of this chapter, for the calendar year

k = number of Phase II units in the dispatch system

generation from non-utility generators. This term equals the total generation (in Kwh) by all units and generators within the dispatch system for the calendar year minus the total non-utility generation from non-utility generators within the dispatch system for the calendar year and divided by the total sales (in Kwh) by the dispatch system for the calendar year.

(B) Dispatch system emissions rate" is the weighted average rate (in lbs/mmBtu) for the dispatch system calculated as follows:

(C) "Fraction of generation from non- utility generators" is the fraction of the dispatch system's total sales accounted for by generation acquired from non-utility generators within or outside the dispatch system. This term equals the total non- utility generation from non-utility generators (within or outside the dispatch system) for the calendar year divided by the total sales (in Kwh) by the dispatch system for the calendar year.

(D) "Non-utility generator" is a power production facility (within or outside the dispatch system) that is not an affected unit or a sulfur-free generator and that has a "non-utility generator emissions rate" for the calendar year under paragraph (c)(2)(v)(F) of this section.

(E) "Non-utility generation" is the generation (in Kwh) that the dispatch system acquired from a non-utility generator during the calendar year as required by federal or State law or an order of a utility regulatory authority or under a contract awarded as the result of a power purchase solicitation required by federal or State law or an order of a utility regulatory authority.

(F) "Non-utility generator average emissions rate" is the weighted average rate (in lbs/mmBtu) for the non-utility generators calculated as follows:

(1) For purposes of determining the most stringent emissions limitation, applicable emissions limitations shall be converted to lbs/mmBtu in accordance with Appendix B of this part. If an applicable emissions limitation cannot be converted to a unit-specific limitation in lbs/mmBtu under appendix B of this part, then the limitation shall not be used in determining the most stringent emissions limitation. Where the power production facility is subject to different emissions limitations depending on the type of fuel it uses during the calendar year, the most stringent emissions limitation shall be determined separately with regard to each type of fuel and the resulting limitation with the highest amount of lbs/mmBtu shall be treated as the facility's most stringent federally enforceable or State enforceable emissions limitation.

(2) If there is no applicable emissions limitation that can be used in determining the most stringent emissions limitation under paragraph (c)(2)(v)(F)(*1*) of this section, then the power production facility has no non-utility generator emissions rate for purposes of paragraphs (c)(2)(v)

Copyright 1993-1997, The Bureau of National Affairs, Inc.

allowances are surrendered.

(i) *Calculating Dispatch System Adjusted Utilization.* "Dispatch system adjusted utilization" (in mmBtu) is the sum of the adjusted utilization under §72.91(a) for all Phase I units in the dispatch system. If dispatch system adjusted utilization" is less than or equal to zero, then no allowances are surrendered by any unit in that dispatch system.

(ii) *Calculating Dispatch System Aggregate Baseline.* "Dispatch system aggregate baseline" is the sum of the baselines (as defined in §72.2 of this chapter) for all Phase I units in the dispatch system.

(iii) *Calculating Percentage Change in Dispatch System Sales.* "Percentage change in dispatch system sales" is the "percentage change in dispatch system sales" under §72.91(a)(3)(iii)(C) ; *provided* that if result of the formula in §72.91(a)(3)(iii)(C) is greater than or equal to zero, the value shall be treated as zero only for purposes of paragraph (c)(2) of this section.

(iv) *Calculating Unit's Share.* "Unit's share" is the unit's adjusted utilization divided by the sum of the adjusted utilization for all Phase I units within the dispatch system that have adjusted utilization of greater than zero and is calculated as follows:

$$\textit{Unit's share} = \frac{U_{unit}}{\sum_{i=1}^{m} U_i}$$

where:

(A) U_{unit} = the unit's adjusted utilization for the calendar year;

(B) U_i = the adjusted utilization of a Phase I unit in the dispatch system for the calendar year; and

(C) m = all Phase I units in the dispatch system having an adjusted utilization greater than 0 for the calendar year.

(v) *Calculating Emissions Rate.* "Emissions rate" (in lbs/mmBtu) is the weighted average emissions rate for sulfur dioxide of all units and generators, within and outside the dispatch system, that contributed to the dispatch system's electrical output for the year, calculated as follows:

Emissions rate = [fraction of generation within dispatch system × dispatch system emissions rate] + [fraction of generation from non-utility generators × non-utility generator average emissions rate] + [fraction of generation outside dispatch system × fraction of non-Phase 1 and non-foreign generation in NERC region × NERC region emissions rate]

Where:

(A) "Fraction of generation within dispatch system" is the fraction of the dispatch system's total sales accounted for by generation from units and generators within the dispatch system, other than

Copyright 1993-1997, The Bureau of National Affairs, Inc.

section;

(E) The calculation of "fraction of generation within dispatch system" under paragraph (c)(2)(v)(A) of this section;

[§72.92(b)(2)(ii)(F)—(H) amended at 60 FR 18468, April 11, 1995]

(F) The calculation of "dispatch system emissions rate" under paragraph (c)(2)(v)(B) of this section;

(G) The calculation of "fraction of generation from non-utility generators" under paragraph (c)(2)(v)(C) of this section;

(H) The calculation of "non-utility generator average emissions rate " under paragraph (c)(2)(v)(F) of this section;

[§72.92(b)(2)(ii)(I)—(J) added at 60 FR 18468, April 11, 1995]

(I) A certification that each designated representative will use these figures, as appropriate, in its annual compliance certification report and will submit upon request the data supporting these calculations; and

(J) The signatures of all the designated representatives.

(c) *Allowance Surrender Formula.*

(1) As provided under the allowance surrender formula in paragraph (c)(2) of this section:

(i) Allowances are not surrendered for deduction for the portion of adjusted utilization accounted for by:

(A) Shifts in generation from the unit to other Phase I units;

(B) A dispatch-system-wide sales decline;

(C) Plan reductions under a reduced utilization plan as calculated under §72.91 ; and

(D) Foreign generation.

(ii) Allowances are surrendered for deduction for the portion of adjusted utilization that is not accounted for under paragraph (c)(1)(i) of this section.

(2) The designated representative shall surrender for deduction the number of allowances calculated using the following formula:

Allowances surrendered = [dispatch system adjusted utilization + (dispatch system aggregate baseline × percentage change in dispatch system sales)] ×unit's share × emissions rate ÷ 2000 lbs/ton.

If the result of the formula for "allowances surrendered" is less than or equal to zero, then no

Copyright 1993-1997, The Bureau of National Affairs, Inc.

(ii) The amount of adjusted utilization attributable to the forced outage (in mmBtu and Kwh), if any;

(iii) The duration or expected duration of the forced outage;

(iv) If the unit has not been returned to normal service, the expected date on which the unit will be returned to normal service; and

(v) A demonstration of the measures taken by the owners and operators to restore the unit to normal service as expeditiously as practicable, including any measures taken to prevent any similar forced outage in the future.

(b) *Other Submissions.*

(1) [Reserved]

[§72.92(b)(1) removed and reserved at 60 FR 18468, April 11, 1995]

(2) (i) If any Phase I unit in a dispatch system is governed during the calendar year by an approved reduced utilization plan relying on sulfur-free generation, then the designated representatives of all affected units in such dispatch system shall jointly submit, within 60 days of the end of the calendar year, a dispatch system data report that includes the following elements in a format prescribed by the Administrator:

(A) The name of the dispatch system as reported under §72.33 ;

(B) The calculation of "percentage change in dispatch system sales" under §72.91(a)(3)(iii)(C);

(C) A certification that each designated representative will use this figure, as appropriate, in its annual compliance certification report and will submit upon request the data supporting the calculation; and

(D) The signatures of all the designated representatives.

(ii) If any Phase I unit in a dispatch system has adjusted utilization greater than zero for the calendar year, then the designated representatives of all Phase I units in such dispatch system shall jointly submit, within 60 days of the end of the calendar year, a dispatch system data report that includes the following elements in a format prescribed by the Administrator:

(A) The name of the dispatch system as reported under §72.33 ;

(B) The calculation of "percentage change in dispatch system sales" under §72.91(a)(3)(iii)(C);

(C) The calculation of "dispatch system adjusted utilization" under paragraph (c)(2)(i) of this section;

(D) The calculation of "dispatch system aggregate baseline" under paragraph (c)(2)(ii) of this

Copyright 1993-1997, The Bureau of National Affairs, Inc.

allowances that should be deducted to offset any increase in excess emissions or returned to account for any decrease in excess emissions; and the amount of the excess emissions penalty (excluding interest) that should be paid or returned to account for the change in excess emissions. The Administrator will deduct immediately from the unit's compliance subaccount the amount of allowances that he or she determines is necessary to offset any increase in excess emissions or will return immediately to the unit's compliance subaccount the amount of allowances that he or she determines is necessary to account for any decrease in excess emissions. The designated representative may identify the serial numbers of the allowances to be deducted or returned. In the absence of such identification, the deduction will be on a first-in, first-out basis under §73.35(c)(2) of this chapter and the return will be at the Administrator's discretion.

(8) If the designated representative of a unit fails to submit on a timely basis a confirmation report (in accordance with paragraph (b) of this section) with regard to the estimate of expected kilowatt hour savings or improvement in heat rate from any energy conservation or improved unit efficiency measure under the reduced utilization plan, then the Administrator will reject such estimate and correct it to equal zero in the unit's annual compliance certification report that includes that estimate. The Administrator will deduct immediately, on a first-in, first-out basis under §73.35(c)(2) of this chapter, the amount of allowances that he or she determines is necessary to offset any increase in excess emissions of sulfur dioxide that results from the correction and require the owners and operators to pay an excess emission penalty in accordance with part 77of this chapter.

40 CFR 72.92 Phase I unit allowance surrender.

(a) *Annual Compliance Certification Report.* If a Phase I unit's adjusted utilization for the calendar year in Phase I under §72.91(a) is greater than zero, then the designated representative shall include in the annual compliance certification report the number of allowances that shall be surrendered for adjusted utilization using the formula in paragraph (c) of this section and the calculations that were performed to obtain that number.

[§72.92(a) revised at 60 FR 18468, April 11, 1995]

(1) The number of allowances that shall be surrendered for adjusted utilization using the formula in paragraph (c) of this section and the calculations that were performed to obtain that number.

(2) Identification of the amounts of adjusted utilization that were caused by a dispatch-system-wide decline in sales, a forced outage at the unit, or economic dispatching in accordance with §72.43(e)(1).

(3) If the unit experienced a forced outage during the year that is used to account for any adjusted utilization of the unit under paragraph (a)(2) of this section or if the unit is currently experiencing a forced outage that is expected to last longer than 4 months:

(i) A statement specifying the event that caused the forced outage;

Copyright 1993-1997, The Bureau of National Affairs, Inc.

(ii) "Estimated heat input reduction" is the total of the amounts of reduction in the unit's heat input (in mmBtu) accounted for by energy conservation and improved efficiency measures as estimated in the unit's annual compliance certification report for the calendar year.

(iii) "Emissions rate" is the "emissions rate" under §72.92(c)(2)(v) of this part.

(5) If the total, included in the confirmation report , of the amounts of verified reduction in the unit's heat input from energy conservation and improved unit efficiency measures is less than the total estimated in the unit's annual compliance certification report for such measures for the calendar year, then the designated representative shall include in the confirmation report the number of allowances to be deducted from the unit's compliance subaccount, which equals the absolute value of the result of the formula for allowances credited under paragraph (b)(4) of this section.

(6) Unless paragraph (b)(3) of this section applies, the designated representative shall include in the confirmation report the adjusted amount of allowances that would have held in the unit's compliance subaccount if the deductions made under §73.35(b) of this chapter had been based on the verified, rather than the estimated, reduction in the unit's heat input from energy conservation and improved efficiency measures, calculated as follows:

Adjusted amount of allow- ances=allowances held after deduction-excess emissions + allowances credited-allowances deducted

where:

(i) "*Allowances held after deductions*" is the amount of allowances held in the unit's compliance subaccount after deductions were made under §73.35(b) of this chapter based on the annual compliance certification report.

(ii) "*Excess emission*" is the amount (if any) of excess emissions determined under §73.35(b) for the calendar year based on the annual compliance certification report.

(iii) "*Allowances credited*" is the amount of allowances calculated under paragraph (b)(4) of this section.

(iv) "*Allowances deducted*" is the amount of allowances calculated under paragraph (b)(5) of this section.

(v) If the result of the formula for "adjusted amount of allowances" is negative, the absolute value of the result constitutes excess emissions of sulfur dioxide. If the result is positive, there are no excess emissions of sulfur dioxide.

(7) If the amount of excess emissions of sulfur dioxide calculated under paragraph (b)(6) of this section differs from the amount of excess emissions of sulfur dioxide determined under §73.35(b) of this chapter based on the annual compliance certification report, then the designated representative shall include in the confirmation report a demonstration of: the number of

Copyright 1993-1997, The Bureau of National Affairs, Inc.

(B) Certification, by a State utility regulatory authority that has ratemaking jurisdiction over the utility system that paid for the measures in accordance with §72.43(b)(2) of this part and over rates reflecting any of the amount paid for such measures and that meets the criteria in §73.82(c)(1) (i) and (ii) of this chapter, that such authority verified specified figures related to demand-side measures; and

(C) Certification, by a utility regulatory authority that has ratemaking jurisdiction over the utility system that paid for the measures in accordance with §72.43(b)(2) of this part and over rates reflecting any of the amount paid for such measures, that such authority verified specified figures related to supply-side measures.

(2) Notwithstanding paragraph (b)(1)(i) of this section, where two or more Phase I units include in the confirmation report the verified kilowatt hour savings or reduction in heat rate from the same specific conservation or improved unit efficiency measures:

(i) The designated representatives of all such units shall submit with their confirmation reports a certification signed by all such designated representatives. The certification shall apportion the total kilowatt hour savings or reduction in heat rate among such units.

(ii) Each designated representative shall include in the confirmation report only the respective unit's share of the total savings or reduction in heat rate in accordance with the certification under paragraph (b)(2)(i) of this section.

[§72.91(b)(2) revised at 59 FR 60229, Nov. 22, 1994]

(3) If the total, included in the confirmation report, of the amounts of verified reduction in the unit's heat input from energy conservation and unit efficiency measures equals the total estimated in the unit's annual compliance certification report from such measures for the calendar year, then the designated representatives shall include in the confirmation report a statement indicating that is true.

(4) If the total, included in the confirmation report, of the amounts of verified reduction in the units's heat input from energy conservation and improved unit efficiency measures is greater than the total estimated in the unit's annual compliance certification report from such measures for the calendar year, then the designated representative shall include in the confirmation report the number of allowances to be credited to the unit's compliance subaccount calculated using the following formula:

Allowances credited=(verified heat input reduction-estimated hear input reduction) × emissions rate + 2000 lbs/ton

where:

(i) "Verified heat input reduction" is the total of the amounts of verified reduction in the units' heat input (in mmBtu) from energy conservation and improved unit efficiency measures included in the confirmation report.

Copyright 1993-1997, The Bureau of National Affairs, Inc.

(6) (i) Where a unit includes in "plan reductions" under paragraph (a)(3) of this section the increase in utilization of any sulfur-free generator, the designated representative of the unit shall submit, with the annual compliance certification report, documentation demonstrating that an amount of electrical energy at least equal to the "shift to sulfur-free generator" attributed to the sulfur-free generator in the annual report was actually acquired by the unit's dispatch system from the sulfur-free generator.

(ii) Where a unit includes in "plan reductions" under paragraph (a)(3) of this section utilization of any compensating unit, the designated representative of the unit shall submit with the annual compliance certification report, documentation demonstrating that an amount of electrical energy at least equal to the "shift to compensating unit" attributed to the compensating unit in the annual report was actually acquired by the unit's dispatch system from the compensating unit.

[§72.91(a)(6) revised at 59 FR 60229, Nov. 22, 1994]

(7) Notwithstanding paragraphs (a)(3)(i), (ii), (iii), and (iv), (a)(4) , and (a)(5) of this section, plan reductions" minus "compensating generation provided to other units" shall not exceed "baseline" minus "actual utilization."

[§72.91(a)(7) added at 59 FR 60229, Nov. 22, 1994]

(b) *Confirmation Report.*

(1) If a unit's annual compliance certification report estimates any expected kilowatt hour savings or improvement in heat rate from energy conservation or improved unit efficiency measures under a reduced utilization plan, the designated representative shall submit, by July 1 of the year in which the annual report was submitted, a confirmation report. The Administrator may grant, for good cause shown, an extension of the time to file the confirmation report. The confirmation report shall include the following elements in a format prescribed by the Administrator:

(i) The verified kilowatt hour savings from each such energy conservation measure and the verified corresponding reduction in the unit's heat input resulting from each measure during the calendar year covered by the annual report. For purposes of this paragraph (b), all values in Kwh shall be converted to mmBtu using the actual annual heat rate (Btu/Kwh) of the unit (determined in accordance with part 75 of this chapter) before the employment of any improved unit measures under an approved reduced utilization plan.

(ii) The verified reduction in the heat rate achieved by each improved unit efficiency measure and the verified corresponding reduction in the unit's heat input resulting from such measure.

(iii) For all figures under paragraphs (b)(1)(i) and (ii) of this section:

(A) Documentation (which may follow the EPA Conservation Verification Protocol) verifying specified figures to the satisfaction of the Administrator; or

Copyright 1993-1997, The Bureau of National Affairs, Inc.

paragraph (a)(3)(iii) of this section.

(D) If the result of the formula for "shift to sulfur-free generator" is less than or equal to zero, then "shift to sulfur-free generator" is zero.

(iv) "Shifts to designated compensating units" is the reduction in utilization (in mmBtu) for the calendar year that is accounted for by increased generation at compensating units designated under the reduced utilization plan in effect for the calendar year. This term equals the heat rate, under paragraph (a)(3) of this section, of the unit reducing utilization multiplied by the sum, for all such compensating units, of the "shift to compensating unit" for each compensating unit. "Shift to compensating unit" shall equal the amount of compensating generation (in Kwh), to the extent documented under paragraph (a)(6) of this section, that the designated representatives of the unit reducing utilization and the compensating unit have certified (in their respective annual compliance certification reports) as the amount that will be converted to mmBtus and used, in accordance with paragraph (a)(4) of this section, in calculating the adjusted utilization for the compensating unit.

[§72.91(a)(3)(iv) revised at 59 FR 60229, Nov. 22, 1994]

(4) "Compensating generation provided to other units" is the total amount of utilization (in mmBtu) necessary to provide the generation (if any) that was shifted to the unit as a designated compensating unit under any other reduced utilization plans that were in effect for the unit and for the calendar year. This term equals the heat rate, under paragraph (a)(3) of this section, of such unit multiplied by the sum of each shift to compensating unit" that is attributed to the unit in the annual compliance certification reports submitted by the Phase I units under such other plans and that is certified under paragraph (a)(3)(iv) of this section.

[§72.91(a)(4) revised at 59 FR 60229, Nov. 22, 1994]

(5) Notwithstanding paragraphs (a)(3) (i), (ii), and (iii) of this section, where two or more Phase I units include in "plan reductions", in their annual compliance certification reports for the calendar year, expected kilowatt hour savings or reduction in heat rate from the same specific conservation or improved unit efficiency measures or increased utilization of the same sulfur-free generator:

(i) The designated representatives of all such units shall submit with their annual reports a certification signed by all such designated representatives. The certification shall apportion the total kilowatt hour savings, reduction in heat rate, or increased utilization among such units.

(ii) Each designated representative shall include in the annual report only the respective unit's share of the total kilowatt hour savings, reduction in heat rate, or increased utilization, in accordance with the certification under paragraph (a)(5)(i) of this section.

[§72.91(a)(5) amended at 59 FR 60229, Nov. 22, 1994]

Copyright 1993-1997, The Bureau of National Affairs, Inc.

$$\text{Percentage change in dispatch system sales} = [S_c - (\sum_{y=1985}^{1987} S_y \div 3)] \div [\sum_{y=1985}^{1987} S_y \div 3]$$

where:
S=dispatch system sales (in Kwh)
c=calendar year
y=1985, 1986, or 1987

formula and converting all values in Kwh to mmBtu using the actual annual average heat rate (Btu/Kwh) of the unit (determined in accordance with part 75 of this chapter) before the employment of any improved unit efficiency measures under an approved plan:

Plan reductions=reduction from energy conservation+reduction from improved unit efficiency improvements+shifts to designated sulfur- free generators+shifts to designated compensating units

where:

(i) "Reduction from energy conservation" is a good faith estimate of the expected kilowatt hour savings during the calendar year from all conservation measures under the reduced utilization plan and the corresponding reduction in heat input (in mmBtu) resulting from those savings. The verified amount of such reduction shall be submitted in accordance with paragraph (b) of this section.

(ii) "Reduction from improved unit efficiency" is a good faith estimate of the expected improvement in heat rate during the calendar year and the corresponding reduction in heat input (in mmBtu) at the Phase I unit as a result of all improved unit efficiency measures under the reduced utilization plan. The verified amount of such reduction shall be submitted in accordance with paragraph (b) of this section.

(iii) "Shifts to designated sulfur-free generators" is the reduction in utilization (in mmBtu), for the calendar year, that is accounted for by all sulfur-free generators designated under the reduced utilization plan in effect for the calendar year. This term equals the sum, for all such generators, of the "shift to sulfur-free generator." "Shift to sulfur-free generator" shall equal the amount, to the extent documented under paragraph (a)(6) of this section, calculated for each generator using the following formula:

Shift to sulfur-free generator=actual sulfur-free utilization-[(average 1985-87 sulfur-free annual utilization) (1+percentage change in dispatch system sales)]

[§72.91(a)(3)(iii) corrected at 58 FR 40746, July 30, 1993; introductory text revised at 59 FR 60229, Nov. 22, 1994]

where:

(A) "Actual sulfur-free utilization" is the actual annual generation (in Kwh) of the designated sulfur-free generator for the calendar year converted to mmBtus.

(B) "Average 1985-87 sulfur-free utilization" is the sum of annual generation (in Kwh) for 1985, 1986, and 1987 for the designated sulfur-free generator, divided by three and converted to mmBtus.

(C) "Percentage change in dispatch system sales" is calculated as follows:

If the result of the formula for percentage change in dispatch system sales is less than or equal to zero, then percentage change in dispatch system sales shall be treated as zero only for purposes of

Copyright 1993-1997, The Bureau of National Affairs, Inc.

in compliance with the requirements of the Acid Rain Program applicable to the unit, including:

(1) Whether the unit was operated in compliance with the applicable Acid Rain emissions limitations, including whether the unit held allowances, as of the allowance transfer deadline, in its compliance subaccount (after accounting for any allowance deductions under §73.34(c) of this chapter) not less than the unit's total sulfur dioxide emissions during the calendar year covered by the annual report;

(2) Whether the monitoring plan that governs the unit has been maintained to reflect the actual operation and monitoring of the unit and contains all information necessary to attribute monitored emissions to the unit;

(3) Whether all the emissions from the unit, or a group of units (including the unit) using a common stack, were monitored or accounted for through the missing data procedures and reported in the quarterly monitoring reports;

(4) Whether the facts that form the basis for certification of each monitor at the unit or a group of units (including the unit) using a common stack or for using an Acid Rain Program excepted monitoring method or approved alternative monitoring method, if any, has changed; and

(5) If a change is required to be reported under paragraph (c)(4) of this section, specify the nature of the change, the reason for the change, when the change occurred, and how the unit's compliance status was determined subsequent to the change, including what method was used to determine emissions when a change mandated the need for monitor recertification.

40 CFR 72.91 Phase I unit adjusted utilization.

(a) *Annual Compliance Certification Report.* The designated representative for each Phase I unit shall include in the annual compliance certification report the unit's adjusted utilization for the calendar year in Phase I covered by the report, calculated as follows:

Adjusted utilization=baseline-actual utilization-plan reductions + compensating generation provided to other units

[§72.91(a) introductory paragraph corrected at 58 FR 40746, July 30, 1993; amended at 60 FR 18468, April 11, 1995]

where:

(1) "Baseline" is as defined in §72.2 of this part.

(2) "Actual utilization" is the actual annual heat input (in mmBtu) of the unit for the calendar year determined in accordance with part 75 of this chapter.

(3) "Plan reductions" are the reductions in actual utilization, for the calendar year, below the baseline that are accounted for by an approved reduced utilization plan. The designated representative for the unit shall calculate the "plan reductions" (in mmBtu) using the following

Copyright 1993-1997, The Bureau of National Affairs, Inc.

part.

(c) As provided in §§72.73(b)(2) and 72.74(b)(2) of this part, the permitting authority shall reopen an Acid Rain permit to incorporate nitrogen oxides requirements, consistent with section 407 of the Act and regulations implementing section 407 of the Act.

(d) Any reopening of an Acid Rain permit shall not affect the term of the permit.

Subpart I—Compliance Certification

40 CFR 72.90 Annual compliance certification report.

(a) *Applicability and Deadline.* For each calendar year in which a unit is subject to the Acid Rain emissions limitations, the designated representative of the source at which the unit is located shall submit to the Administrator, within 60 days after the end of the calendar year, an annual compliance certification report for the unit.

(b) *Contents of Report.* The designated representative shall include in the annual compliance certification report under paragraph (a) of this section the following elements, in a format prescribed by the Administrator, concerning the unit and the calendar year covered by the report:

(1) Identification of the unit;

(2) For all Phase I units, the information in accordance with §§72.91(a) and 72.92(a) of this part;

(3) If the unit is governed by an approved Phase I extension plan, then the information in accordance with §72.93 of this part;

(4) At the designated representative's option, the total number of allowances to be deducted for the year, using the formula in §72.95 of this part, and the serial numbers of the allowances that are to be deducted;

(5) At the designated representative's option, for units that share a common stack and whose emissions of sulfur dioxide are not monitored separately or apportioned in accordance with part 75 of this chapter, the percentage of the total number of allowances under paragraph (b)(4) of this section for all such units that is to be deducted from each unit's compliance subaccount; and

(6) The compliance certification under paragraph (c) of this section.

(c) *Annual Compliance Certification.* In the annual compliance certification report under paragraph (a) of this section, the designated representative shall certify, based on reasonable inquiry of those persons with primary responsibility for operating the source and the affected units at the source in compliance with the Acid Rain Program, whether each affected unit for which the compliance certification is submitted was operated during the calendar year covered by the report

Copyright 1993-1997, The Bureau of National Affairs, Inc.

of qualifying Phase I technology, *provided* that they are in accordance with §72.42 of this part;

(9) Changes in the date, specified in a new unit's Acid Rain permit, of commencement of operation or the deadline for monitor certification, *provided* that they are in accordance with §72.9 of this part;

(10) The addition of or change in a nitrogen oxides alternative emissions limitation demonstration period, *provided* that the requirements of regulations implementing section 407 of the Act are met; and

(11) Changes in a thermal energy plan that do not result in the addition or subtraction of a replacement unit or any change affecting the number of allowances transferred for the replacement of thermal energy.

[§72.83(a)(11) revised at 60 FR 17111, April 4, 1995]

(12) Incorporation of changes that the Administrator has determined to be similar to those in paragraphs (a)(1) through (11) of this section.

[§72.83(a)(12) added at 60 FR 17111, April 4, 1995]

(b) Administrative amendments shall follow the procedures set forth at §70.7(d)(3) of this chapter. Where the State is the permitting authority, the permitting authority shall submit the revised portion of the permit to the Administrator within 10 working days after the date of final action on the request for an administrative amendment.

40 CFR 72.84 Automatic permit amendment.

The following permit revisions shall be deemed to amend automatically, and become a part of the affected unit's Acid Rain permit by operation of law without any further review:

(a) Upon recordation by the Administrator under part 73 of this chapter, all allowance allocations to, transfers to, and deductions from an affected unit's Allowance Tracking System account; and

(b) Incorporation of an offset plan that has been approved by the Administrator under part 77 of this chapter.

40 CFR 72.85 Permit reopenings.

(a) As provided in §70.7(f) of this chapter, the permitting authority shall reopen an Acid Rain permit for cause, including whenever additional requirements become applicable to any affected unit governed by the permit.

(b) In reopening an Acid Rain permit for cause, the permitting authority shall issue a draft permit changing the provisions, or adding the requirements, for which the reopening was necessary. The draft permit shall be subject to the requirements of subparts E, F, and G of this

Copyright 1993-1997, The Bureau of National Affairs, Inc.

circulation in the area where the source is located or in a State publication designed to give general public notice.

(b) The public shall have a period of 30 days, commencing on the date of publication of the notice, to comment on the fast- track modification. Comments shall be submitted in writing to the permitting authority and to the designated representative.

(c) The designated representative shall submit the fast-track modification to the permitting authority on or before commencement of the public comment period.

(d) Within 30 days of the close of the public comment period, the permitting authority shall consider the fast-track modification and the comments received and approve, in whole or in part or with changes or conditions as appropriate, or disapprove the modification. A fast-track modification shall be effective immediately upon issuance, in accordance with §70.7(a)(1)(v) of this chapter as applied to significant permit modifications.

40 CFR 72.83 Administrative permit amendment.

(a) Acid Rain permit revisions that shall follow the administrative permit amendment procedures are:

(1) Activation of a compliance option conditionally approved by the permitting authority; *provided* that all requirements for activation under subpart D of this part are met;

(2) Changes in the designated representative or alternative designated representative; *provided* that a new certificate of representation is submitted;

(3) Correction of typographical errors;

(4) Changes in names, addresses, or telephone or facsimile numbers;

(5) Changes in the owners or operators; *provided* that a new certificate of representation is submitted within 30 days;

(6) (i) Termination of a compliance option in the permit; provided that all requirements for termination under subpart D of this part are met and this procedure shall not be used to terminate a repowering plan after December 31, 1999 or a Phase I extension plan;

(ii) For opt-in sources, termination of a compliance option in the permit; provided that all requirements for termination under §74.47 of this chapter are met.

[§72.83(a)(6) revised at 60 FR 17111, April 4, 1995]

(7) Changes in a substitution or reduced utilization plan that do not result in the addition of a new substitution unit or a new compensating unit under the plan;

(8) Changes in the date, specified in a unit's Acid Rain permit, of commencement of operation

Copyright 1993-1997, The Bureau of National Affairs, Inc.

(b) The following permit revisions shall follow, at the option of the designated representative submitting the permit revision, either the permit modification procedures or the fast-track modification procedures under §72.82 of this part:

(1) Consistent with paragraph (a) of this section, incorporation of a compliance option that the designated representative did not submit for approval and comment during the permit issuance process; except that incorporation of a reduced utilization plan that was not submitted during the permit issuance process, that does not designate a compensating unit, and that meets the requirements of §72.43 of this part, may use the administrative permit amendment procedures under §72.83 of this part;

(2) Changes in a substitution plan or reduced utilization plan that result in the addition of a new substitution unit or a new compensating unit under the plan;

(3) Addition of a nitrogen oxides averaging plan to a permit;

[§72.81(b)(3) amended at 60 FR 17111, April 4, 1995]

(4) Changes in a Phase I extension plan, repowering plan, nitrogen oxides averaging plan, or nitrogen oxides compliance deadline extension; and

[§72.81(b)(4) amended at 60 FR 17111, April 4, 1995]

(5) Changes in a thermal energy plan that result in any addition or subtraction of a replacement unit or any change affecting the number of allowances transferred for the replacement of thermal energy.

[§72.81(b)(5) added at 60 FR 17111, April 4, 1995]

(c) (1) Permit modifications shall follow the permit issuance requirements of:

(i) Subparts E, F, and G of this part, where the Administrator is the permitting authority; or

(ii) Subpart G of this part and §70.7(e)(4)(ii) of this chapter, where the State is the permitting authority.

(2) For purposes of applying paragraph (c)(1) of this section, a permit modification shall be treated as an Acid Rain permit application, to the extent consistent with this subpart.

40 CFR 72.82 Fast-track modifications.

The following procedures shall apply to all fast-track modifications.

(a) The designated representative shall serve a copy of the fast-track modification on the Administrator, the permitting authority, and any person entitled to a written notice under §72.65(b)(1) (ii) , (iii) and (iv) of this part. Within 5 business days of serving such copies, the designated representative shall also give public notice by publication in a newspaper of general

Copyright 1993-1997, The Bureau of National Affairs, Inc.

40 CFR 72.80 General.

(a) This subpart shall govern revisions to any Acid Rain permit issued by the Administrator and to the Acid Rain portion of any operating permit issued by a State with an approved operating permit program under part 70 of this chapter.

(b) The provisions of this subpart shall supersede the operating permit revision procedures specified in part 70 of this chapter with regard to revision of any Acid Rain Program permit provision.

(c) A permit revision may be submitted for approval at any time. No permit revision shall affect the term of the Acid Rain permit to be revised. No permit revision shall excuse any violation of an Acid Rain Program requirement that occurred prior to the effective date of the revision.

(d) The terms of the Acid Rain permit shall apply while the permit revision is pending.

(e) Any determination or interpretation by a State (including a State court) modifying or voiding any Acid Rain permit provision shall be subject to review by the Administrator in accordance with §70.8(c) of this chapter as applied to permit modifications, unless the determination or interpretation is an administrative amendment approved in accordance with §72.83 of this part.

(f) The standard requirements of §72.9 of this part shall not be modified or voided by a permit revision.

(g) Any permit revision involving incorporation of a compliance option that was not submitted for approval and comment during the permit issuance process, or involving a change in a compliance option that was previously submitted, shall meet the requirements for applying for such compliance option under subpart D and section 407 of the Act and regulations implementing section 407 of the Act.

(h) For permit revisions not described in §§72.81 and 72.82 of this part, the permitting authority may, in its discretion, determine which of these sections is applicable.

40 CFR 72.81 Permit modifications.

(a) Permit revisions that shall follow the permit modification procedures are:

(1) Relaxation of an excess emission offset requirement after approval of the offset plan by the Administrator;

(2) Incorporation of a final nitrogen oxides alternative emission limitation following a demonstration period;

(3) Determinations concerning failed repowering projects under §72.44(g)(1)(i) and (2) of this part.

Copyright 1993-1997, The Bureau of National Affairs, Inc.

permit application for nitrogen oxides in accordance with §72.21 . Such reopening shall not affect the term of the Acid Rain portion of an operating permit.

40 CFR 72.74 Federal issuance of Phase II permits.

(a) The Administrator will be responsible for issuing Acid Rain permits for Phase II for any affected sources in a geographic area (including a State) that does not have an operating permit program with full, partial, or interim approval by the Administrator on or before July 1, 1996, under part 70 of this chapter. After approval of a State program, the Administrator will suspend, in accordance with this part and part 70 of this chapter, federal issuance of such permits for sources in the geographic area covered by the State program and the State shall be responsible for issuing such permits in accordance with §72.73 of this part.

(b) *Permit Issuance Deadline.*

(1) (i) On or before January 1, 1998, the Administrator will issue an Acid Rain permit for Phase II governing Acid Rain Program sulfur dioxide requirements to each affected source in a geographic area that, on July 1, 1996, did not have an approved operating permit program under part 70 of this chapter; *provided* that the designated representative for the source submitted a timely and complete Acid Rain permit application in accordance with §72.21 of this part. The failure by the Administrator to issue a permit in accordance with this paragraph shall be grounds for the filing of an appeal under part 78 of this chapter.

(ii) Notwithstanding paragraph (b)(1)(i) of this section, the Administrator may delegate to any State that obtains operating permit program approval after July 1, 1996, responsibility for permit review and implementation.

(iii) Each Acid Rain permit issued in accordance with this section shall have a term of 5 years commencing on its effective date. Each Acid Rain permit issued in accordance with paragraph (b)(1) shall take effect by the later of January 1, 2000 or, where a permit governs a unit under §72.6(a)(3) of this part, the deadline for monitor certification under part 75 of this chapter.

[§72.74(b)(1)(iii) corrected at 58 FR 40746, July 30, 1993]

(2) *Nitrogen Oxides.* Not later than 6 months following submission by the designated representative of a timely and complete Acid Rain permit application for nitrogen oxides, the Administrator shall reopen the Acid Rain permit for Phase II to add the Acid Rain Program nitrogen oxides requirements. Such reopening shall not affect the term of the Acid Rain permit.

(c) *Permit Issuance.* The Administrator will issue Acid Rain permits for Phase II in accordance with subparts E and F of this part and the regulations implementing title V of the Act.

Subpart H—Permit Revisions

Copyright 1993-1997, The Bureau of National Affairs, Inc.

accordance with §§72.7 and 72.8 on any petition for exemption of a new unit or retired unit from requirements of the Acid Rain Program.

(8) *State Permit Evaluation.* The State permitting authority shall periodically evaluate the extent to which its operating permit program meets the Acid Rain Program requirements and supports a cost- effective implementation of the program. The permit fee rates set by the State permitting authority shall be adequate to cover such evaluation.

40 CFR 72.73 State issuance of Phase II permits.

(a) *State Permit Issuance.*

(1) A State with an operating permit program that has been approved by the Administrator under this part and part 70 of this chapter on or before July 1, 1996, shall be responsible for issuing Acid Rain permits for Phase II to all affected sources in that State.

(2) A State that has obtained interim operating permit program approval (as defined in §70.4(d) of this chapter) on or before July 1, 1996 shall be responsible for issuing Acid Rain permits for Phase II to all affected sources in that State.

(3) A State that has obtained partial operating permit program approval (as defined in §70.4(c) of this chapter) on or before July 1, 1996 shall be responsible for issuing Acid Rain permits for Phase II to all affected sources in the geographic area to which the partial approval applies.

(4) The State permitting authority shall comply with the procedures for issuance, revision, renewal, and appeal of Acid Rain permits under this subpart.

(b) *Permit Issuance Deadline.*

(1) (i) On or before December 31, 1997, a State with an approved operating permit program shall issue an Acid Rain permit for Phase II to each affected source in the geographic area for which the program is approved as set forth in paragraph (a) of this section; *provided* that the designated representative of the source submitted a timely and complete Acid Rain permit application in accordance with §72.21 of this part and meets the requirements of this subpart and part 70 of this chapter.

(ii) Each Acid Rain permit issued in accordance with this section shall have a term of 5 years commencing on its effective date. Each Acid Rain permit issued in accordance with paragraph (b)(1)(i) of this section shall take effect by the later of January 1, 2000, or, where the permit governs a unit under §72.6(a)(3) of this part, the deadline for monitor certification under part 75 of this chapter.

(2) *Nitrogen Oxides.* Not later than January 1, 1999, the State permitting authority shall reopen the Acid Rain permit to add the Acid Rain Program nitrogen oxides requirements; *provided* that the designated representative of the affected source submitted a timely and complete Acid Rain

Copyright 1993-1997, The Bureau of National Affairs, Inc.

authority that do not challenge or involve decisions or actions of the Administrator under this part, parts 73, 74, 75, 76, 77 and 78 of this chapter, shall be conducted according to procedures established by the State under §70.4(b)(3)(x) of this chapter. Appeals of the Acid Rain portion of such a permit that challenge or involve such decisions or actions of the Administrator shall follow the procedures under part 78 of this chapter and section 307 of the Act. Such decisions or actions include, but are not limited to, allowance allocations, determinations concerning alternative monitoring systems, and determinations of whether a technology is a qualifying repowering technology.

[§72.72(b)(5)(i) revised at 60 FR 17111, April 4, 1995]

(ii) Under no circumstances shall a State administrative appeal or judicial appeal of the Acid Rain portion of an operating permit be allowed more than 90 days (or such shorter period as provided by the applicable State appeals procedures) following respectively issuance of the Acid Rain portion that is subject to administrative appeal or issuance of the final agency action subject to judicial appeal.

(iii) The State permitting authority shall serve written notice on the Administrator of any State administrative or judicial appeal concerning as Acid Rain provision of any operating permit or denial of an Acid Rain portion of any operating permit within 30 days of the filing of the appeal.

(iv) Any State administrative permit appeals procedures shall ensure that the Administrator may intervene as a matter of right in any permit appeal involving an Acid Rain permit provision or denial of an Acid Rain permit.

(v) The State permitting authority shall serve written notice on the Administrator of any determination or order in a State administrative or judicial proceeding that interprets, modifies, voids, or otherwise relates to any portion of an Acid Rain permit . Following any such determination or order, the Administrator will have an opportunity to review and veto the Acid Rain permit or revoke the permit for cause in accordance with §70.8 of this chapter.

(vi) A failure of the State permitting authority to issue an Acid Rain permit in accordance with §72.73(b)(1)(i) or, with regard to combustion or process sources, §74.14(c)(6) of this chapter shall be ground for filing an appeal.

[§72.72(b)(5)(vi) revised at 60 FR 17111, April 4, 1995]

(vii) No appeal concerning an Acid Rain requirement shall result in a stay of any provision of the Acid Rain permit for which a stay is barred under part 78 of this chapter.

(6) *Cooperation with Utility Regulatory Authority.* In considering any Acid Rain permit application, the State permitting authority shall ensure coordination with any utility regulatory authority with jurisdiction over the owners of the affected unit.

(7) *New Units and Retired Units Exemptions.* The State permitting authority shall act in

Copyright 1993-1997, The Bureau of National Affairs, Inc.

(viii) *Effective Date of Acid Rain Permit.* Each source's Acid Rain permit issued by a State permitting authority under this section shall be effective for a period of 5 years.

(ix) *New Owners.* An Acid Rain permit shall be binding on any new owner or operator or designated representative of any source or unit governed by the permit.

(x) Each Acid Rain permit (including a draft or proposed permit) shall contain all applicable Acid Rain requirements, shall be a complete and segregable portion of the operating permit, and shall not incorporate information contained in any other documents, other than documents that are readily available.

(xi) Invalidation of the Acid Rain portion of an operating permit shall not affect the continuing validity of the rest of the operating permit, nor shall invalidation of any other portion of the operating permit affect the continuing validity of the Acid Rain portion of the permit.

(xii) No Acid Rain permit (including a draft or proposed permit) shall be issued unless the Administrator has received a certificate of representation for the designated representative of the source in accordance with subpart B of this part.

(xiii) Notwithstanding any State law providing that a permit must be issued by default after a specified time, no Acid Rain permit shall be issued until the Administrator and other States have had an opportunity to review a proposed Acid Rain permit as provided in this section and §70.8(b) of this chapter.

(xiv) Except as provided in §72.73(b) and, with regard to combustion or process sources, in §74.14(c)(6) of this chapter, the State permitting authority shall issue or deny an Acid Rain permit within 18 months of receiving a complete Acid Rain permit application submitted in accordance with §72.21 or such lesser time approved under part 70 of this chapter.

[§72.72(b)(1)(xiv) amended at 60 FR 17111, April 4, 1995]

(2) *Permit Revisions.* In acting on any Acid Rain permit revision, the State permitting authority shall follow the provisions and procedures set forth at subpart H of this part.

(3) *Permit Renewal.* The renewal of an Acid Rain permit for an affected source shall be subject to all the requirements of this subpart pertaining to the issuance of permits.

(4) *Acid Rain Program Forms.* In developing the Acid Rain portion of the operating permit, the permitting authority shall use the applicable forms or other formats prescribed by the Administrator under the Acid Rain Program; *provided* that the Administrator may waive this requirement in whole or in part.

(5) *Acid Rain Appeal Procedures.*

(i) Appeals of the Acid Rain portion of an operating permit issued by the State permitting

Copyright 1993-1997, The Bureau of National Affairs, Inc.

[§72.72(b)(1)(ii)(A) amended at 60 FR 17111, April 4, 1995]

(B) The State permitting authority shall prepare a statement of basis in accordance with the requirements for a statement of basis under §72.64 of this part.

(C) Prior to issuance of a draft permit for a combustion or process source, the State permitting authority shall provide the designated representative of a combustion or process source an opportunity to confirm its intention to opt-in, in accordance with §74.14 of this chapter.

[§72.72(b)(1)(ii)(C) amended at 60 FR 17111, April 4, 1995]

(iii) *Notice to Administrator.* The State permitting authority shall submit a copy of the draft Acid Rain permit and the statement of basis to the Administrator and all other relevant portions of the operating permit that may affect the draft Acid Rain permit. This submission requirement will not be waived.

(iv) *Public Notice and Comment Period.* Public notice of the issuance or denial of the draft Acid Rain permit and the opportunity to comment and request a public hearing shall be given by publication in a newspaper of general circulation in the area where the source is located or in a State publication designed to give general public notice. A notice shall be served on those persons required to receive notice under §§70.7(h) and 70.8(b) of this chapter.

(v) *Proposed Permit.* Following the public notice and comment period on a draft Acid Rain permit, the permitting authority shall incorporate all changes necessary and issue a proposed Acid Rain permit in accordance with subpart E of this part or, for combustion or process sources, in accordance with subpart B of part 74 of this chapter or deny a proposed Acid Rain permit.

[§72.72(b)(1)(v) amended at 60 FR 17111, April 4, 1995]

(vi) *Submittal to Administrator.*

(A) The State permitting authority shall submit the proposed Acid Rain permit or denial of a proposed Acid Rain permit to the Administrator in accordance with §70.8(a) of this chapter, the provisions of which shall be treated as applying to the issuance or denial of a proposed Acid Rain permit.

(B) The Administrator will review the proposed Acid Rain permit or denial of a proposed Acid Rain permit in accordance with §70.8(c) of this chapter, the provisions of which shall be treated as applying to the issuance or denial of a proposed Acid Rain permit.

(vii) *Acid Rain Permit Issuance.* Following the Administrator's review of the proposed Acid Rain permit or denial of a proposed Acid Rain permit, the State permitting authority shall or, under §70.8(c) of this chapter (treated as applying to the issuance or denial of an Acid Rain permit), the Administrator will, incorporate any required changes and issue or deny the Acid Rain permit in accordance with subpart E of this part.

Copyright 1993-1997, The Bureau of National Affairs, Inc.

(6) Withholding approval of any compliance option that meets the requirements of the Acid Rain Program; or

(7) Any other aspect of implementation that the Administrator determines would hinder the operation of the Acid Rain Program.

(b) The State operating permit program shall require the following:

(1) *Acid Rain Permit Issuance.* Issuance or denial of Acid Rain permits shall follow the procedures under this part, part 70 of this chapter, and, for combustion or process sources, part 74, including:

[§72.72(b)(1) introductory text revised at 60 FR 17111, April 4, 1995]

(i) *Permit application—*

(A) *Requirement to comply.*

(1) The owners and operators and the designated representative for each affected source, except for combustion or process sources, under jurisdiction of the State permitting authority shall be required to comply with subparts B, C, and D of this part.

(2) The owners and operators and the designated representative for each combustion or process source under jurisdiction of the State permitting authority shall be required to comply with subpart B of this part and subparts B, C, D , and E of part 74 of this chapter.

[§72.72(b)(1)(i)(A) revised at 60 FR 17111, April 4, 1995]

(B) *Effect of an Acid Rain Permit Application.* A complete Acid Rain permit application, except for a permit application for a combustion or process source, shall be binding on the owners and operators and the designated representative of the affected source, all affected units at the source, and any other unit governed by the permit application and shall be enforceable as an Acid Rain permit, from the date of submission of the permit application until the issuance or denial of the Acid Rain permit under paragraph (b)(1)(vii) of this section.

[§72.72(b)(1)(i)(B) revised at 60 FR 17111, April 4, 1995]

(C) *Submission to the Administrator.* The State permitting authority shall submit a written notice of application completeness to the Administrator within 10 working days following a determination by the State permitting authority that the Acid Rain permit application is complete.

(ii) *Draft Permit.*

(A) The State permitting authority shall prepare the draft Acid Rain permit in accordance with subpart E of this part or, for a combustion or process source, subpart B of part 74 of this chapter, or deny a draft Acid Rain permit.

Copyright 1993-1997, The Bureau of National Affairs, Inc.

(b) The Administrator will act on State submissions of an operating permit program in accordance with the schedule and procedures set forth in §70.4(e) of this chapter. The Administrator will approve State programs that conform to the applicable requirements of this subpart and §70.4(b) of this chapter.

(c) (1) After approval of a State operating permit program, the Administrator will suspend, in accordance with this part and part 70 of this chapter, federal issuance of Acid Rain permits for Phase II for sources and units subject to the State program.

(2) The Administrator will issue all Acid Rain permits for Phase I. However, the Administrator reserves the right to delegate the remaining administration of Acid Rain permits for Phase I to approved State operating permit programs.

40 CFR 72.72 State permit program approval criteria.

A State operating permit program shall meet the following criteria concerning the Acid Rain Program. Any aspect of the State program or any implementation of the State program that is inconsistent with these criteria shall be grounds for disapproval or withdrawal of approval of the State program by the Administrator:

(a) *Non-Interference with Acid Rain Program.* The State operating permit program shall not include or implement any measures that would interfere with the Acid Rain Program. In particular, the State program shall not restrict or interfere with allowance trading and shall not interfere with the Administrator's decision on an offset plan. Aspects and implementation of the State program that would constitute interference with the Acid Rain Program, and are thus prohibited, include but are not limited to:

(1) Prohibitions, inconsistent with the Acid Rain Program, on the acquisition or transfer of allowances by an affected unit under the jurisdiction of the State permitting authority;

(2) Restrictions, inconsistent with the Acid Rain Program, on an affected unit's ability to sell or otherwise obligate its allowances;

(3) Requirements that an affected unit maintain a balance of allowances in excess of the level determined to be prudent by any utility regulatory authority with jurisdiction over the owners of the affected unit;

(4) Failing to notify the Administrator of any State administrative or judicial appeals of, or decisions covering, Acid Rain permit provisions that might affect Acid Rain Program requirements;

(5) Issuing an order, inconsistent with the Acid Rain Program, interpreting Acid Rain Program requirements as not applicable to an affected source or an affected unit in whole or in part or otherwise adjusting the requirements;

Copyright 1993-1997, The Bureau of National Affairs, Inc.

(1) Identify any permit provision or portion of the statement of basis that has been changed and the reasons for the change; and

(2) Briefly describe and respond to relevant comments under paragraph (a) of this section.

40 CFR 72.69 Issuance and effective date of Acid Rain permits.

(a) After the close of the public comment period, the Administrator will issue or deny an Acid Rain permit. The Administrator will serve a copy of any Acid Rain permit and the response to comments on the designated representative for the source covered by the issuance or denial and serve written notice of the issuance or denial on any persons who are entitled to written notice under §72.65(b)(1) (ii) , (iii), and (iv) of this part. The Administrator will also give notice in the **Federal Register.**

(b) (1) The term of every Acid Rain permit shall be 5 years commencing on its effective date.

(2) Every Acid Rain permit for Phase I shall take effect on January 1, 1995.

Subpart G—Acid Rain Phase II Implementation

40 CFR 72.70 Relationship to title V operating permit program.

(a) *Scope.* This subpart sets forth criteria for approval of State operating permit programs and the requirements with which State permitting authorities with approved programs shall comply, and with which the Administrator will comply in the absence of an approved State program, to issue Phase II Acid Rain permits.

(b) *Relationship to Operating Permit Program.* Each State permitting authority with an affected source shall act in accordance with this part and part 70, and part 78 of this chapter for the purpose of incorporating Acid Rain Program requirements into each affected source's operating permit or for issuing written exemptions under §§72.7 and 72.8 . To the extent that any requirements of this part and part 78 of this chapter are inconsistent with the requirements of part 70 of this chapter, this part and part 78 of this chapter shall take precedence and shall govern the issuance, denial, revision, reopening, renewal, and appeal of the Acid Rain portion of an operating permit. For purposes of applying this subpart, the provisions of this subpart and of part 70 applicable to Acid Rain permit applications and draft, proposed, and final Acid Rain permits shall also apply to petitions for exemption and draft, proposed, and final written exemptions respectively for new or retired units to the extent consistent with §§72.7 and 72.8 of this chapter.

40 CFR 72.71 Approval of state programs—general.

(a) Each State shall submit, to the Administrator for approval, a proposed operating permit program meeting the requirements of this subpart and part 70 of this chapter.

Copyright 1993-1997, The Bureau of National Affairs, Inc.

Acid Rain permit application.

(c) *Contents.* Timely comments on any aspect of the draft permit or denial or a draft permit will be considered unless they concern:

(1) Any standard requirement under §72.9 ;

(2) Issues that are not relevant, such as:

(i) The environmental effects of acid rain, acid deposition, sulfur dioxide, or nitrogen oxides generally; and

(ii) Permit issuance procedures, or actions on other permit applications, that are not relevant to the draft permit issuance or denial in question.

(d) Persons who do not wish to raise issues concerning the issuance or denial of the draft permit, but who wish to be notified of any subsequent actions concerning such matter may so indicate in writing during the public comment period or at any other time. The Administrator will place their names on a list of interested persons.

40 CFR 72.67 Opportunity for public hearing.

(a) During the public comment period, any person may request a public hearing. A request for a public hearing shall be made in writing and shall state the issues proposed to be raised in the hearing.

(b) On the Administrator's own motion or on the request of any person, the Administrator may, at his or her discretion, hold a pubic hearing whenever the Administrator finds that such a hearing will contribute to the decision-making process by clarifying one or more significant issues affecting the draft permit or denial of a draft permit. Public hearings will not be held on issues under §72.66(c) (1) and (2).

(c) During a public hearing under this section, any person may submit oral or written comments concerning the draft permit or denial of a draft permit. The Administrator may set reasonable limits on the time allowed for oral statements and will require the submission of a written summary of each oral statement.

(d) The Administrator will assure that a record is made of the hearing.

40 CFR 72.68 Response to comments.

(a) The Administrator will consider comments on the draft permit or denial of a draft permit that are received during the public comment period and any public hearing. The Administrator is not required to consider comments otherwise received.

(b) In issuing or denying an Acid Rain permit, the Administrator will:

Copyright 1993-1997, The Bureau of National Affairs, Inc.

(4) Any compliance options proposed for approval in the draft permit or for disapproval and the total allowances (including any under the compliance options) allocated to each unit if the Acid Rain permit application is approved.

(5) The address and office hours of a public location where the administrative record is available for public inspection and a statement that all information submitted by the designated representative and not protected as confidential under section 114(c) of the Act is available for public inspection as part of the administrative record.

(6) For public notice under paragraph (a)(1)(i) of this section, a brief description of the public comment procedures, including:

(i) A 30-day period for public comment beginning the date of publication of the notice or, in the case of an extension or reopening of the public comment period, such period as the Administrator deems appropriate;

(ii) The address where public comments should be sent;

(iii) Required formats and contents for public comment;

(iv) An opportunity to request a public hearing to occur not earlier than 15 days after public notice is given and the location, date, time, and procedures of any scheduled public hearing; and

(v) Any other means by which the public may participate.

(d) *Extensions and Reopenings of the Public Comment Period.* On the Administrator's own motion or on the request of any person, the Administrator may, at his or her discretion, extend or reopen the public comment period where he or she finds that doing so will contribute to the decision-making process by clarifying one or more significant issues affecting the draft permit or denial of a draft permit. Notice of any such extension or reopening shall be given under paragraph (a)(1)(i) of this section.

40 CFR 72.66 Public comments.

(a) *General.* During the public comment period, any person may submit written comments on the draft permit or the denial of a draft permit.

(b) *Form.*

(1) Comments shall be submitted in duplicate.

(2) The submission shall clearly indicate the draft permit issuance or denial to which the comments apply.

(3) The submission shall clearly indicate the name of the person commenting, his or her interest in the matter, and his or her affiliation, if any, to owners and operators of any unit covered by the

Copyright 1993-1997, The Bureau of National Affairs, Inc.

regulatory provisions and to the administrative record; and

(2) The name, address, and telephone, and facsimile numbers of the EPA office processing the issuance or denial of the draft permit.

40 CFR 72.65 Public notice of opportunities of public comment.

(a) (1) The Administrator will give public notice of the following:

(i) The draft permit or denial of a draft permit and the opportunity for public review and comment and to request a public hearing; and

(ii) Date, time, location, and procedures for any scheduled hearing on the draft permit or denial of a draft permit.

(2) Any public notice given under this section may be for the issuance or denial of one or more draft permits.

(b) *Methods.* The Administrator will give the public notice required by this section by:

(1) Serving written notice on the following persons (except where such person has waived his or her right to receive such notice):

(i) The designated representative;

(ii) The State or local air pollution agency and any State or local utility regulatory authority with jurisdiction over the owners of any source or any unit covered by the Acid Rain permit application;

(iii) The State or local air pollution agency for any contiguous State whose air quality may be affected by, or for any State located within a 50-mile radius of, any source covered by the Acid Rain permit application; and

(iv) Any interested person.

(2) Giving notice by publication in the FEDERAL REGISTER and in a newspaper of general circulation in the area where the source covered by the Acid Rain permit application is located or in a State publication designed to give general public notice.

(c) *Contents.* All public notices issued under this section will contain the following information:

(1) Identification of the EPA office processing the issuance or denial of the draft permit for which the notice is being given.

(2) Identification of the designated representative for the affected source.

(3) Identification of each unit covered by the Acid Rain permit applicationand the draft permit.

Copyright 1993-1997, The Bureau of National Affairs, Inc.

(d) The Administrator will provide a 30-day period for public comment, and opportunity to request a public hearing, on the draft permit or denial of a draft permit, in accordance with the public notice required under §72.65(a)(1)(i) of this part.

40 CFR 72.63 Administrative record.

(a) *Contents of the Administrative Record.* The Administrator will prepare an administrative record for an Acid Rain permit or denial of an Acid Rain permit. The administrative record will contain:

(1) The permit application and any supporting or supplemental data submitted by the designated representative;

(2) The draft permit;

(3) The statement of basis;

(4) Copies of any documents cited in the statement of basis and any other documents relied on by the Administrator in issuing or denying the draft permit (including any records of discussions or conferences with owners, operators, or the designated representative of affected units at the source or interested persons regarding the draft permit), or, for any such documents that are readily available, a statement of their location;

(5) Copies of all written public comments submitted on the draft permit or denial of a draft permit;

(6) The record of any public hearing on the draft permit or denial of a draft permit;

(7) The Acid Rain permit; and

(8) Any response to public comments submitted on the draft permit or denial of a draft permit and copies of any documents cited in the response and any other documents relied on by the Administrator to issue or deny the Acid Rain permit, or, for any such documents that are readily available, a statement of their location.

(b) [Reserved]

40 CFR 72.64 Statement of basis.

(a) The statement of basis will briefly set forth significant factual, legal, and policy considerations on which the Administrator relied in issuing or denying the draft permit.

(b) The statement of basis will include:

(1) The reasons, and supporting authority, for approval or disapproval of any compliance options requested in the permit application, including references to applicable statutory or

Copyright 1993-1997, The Bureau of National Affairs, Inc.

State permitting authorities with operating permit programs approved under part 70 of this chapter, except as expressly provided in subpart G of this part.

(b) *Permit Decision Deadlines.* The Administrator will issue or deny an Acid Rain permit under §72.69(a) within 6 months of receipt of a complete Acid Rain permit application submitted for a unit, in accordance with §72.21 , at the U.S. EPA Regional Office for the Region in which the source is located.

40 CFR 72.61 Completeness.

(a) *Determination of Completeness.* The Administrator will determine whether the Acid Rain permit application is complete within 30 days of receipt by the U.S. EPA Regional Office for the Region in which the source is located. The permit application shall be deemed to be complete if the Administrator fails to notify the designated representative to the contrary within 30 days of receipt.

(b) *Supplemental Information.*

(1) Regardless of whether the Acid Rain permit application is complete under paragraph (a) of this section, the Administrator may require submission of any additional information that the Administrator determines to be necessary in order to review the Acid Rain permit application and issue an Acid Rain permit.

(2) (i) The designated representative shall submit the information required under paragraph (b)(1) of this section within 30 days after he or she is notified of the requirement for supplemental information unless the Administrator allows for additional time to collect and submit the information.

(ii) If the designated representative fails to submit the supplemental information within the required time period, the Administrator may disapprove that portion of the Acid Rain permit application for the review of which the information was necessary and may deny the source an Acid Rain permit.

40 CFR 72.62 Draft permit.

(a) After the Administrator receives a complete Acid Rain permit application and any supplemental information, the Administrator will issue a draft permit that incorporates in whole, in part, or with changes or conditions as appropriate, the permit application or deny the source a draft permit.

(b) The draft permit will be based on the information submitted by the designated representative of the affected source and other relevant information.

(c) The Administrator will serve a copy of the draft permit and the statement of basis on the designated representative of the affected source.

Copyright 1993-1997, The Bureau of National Affairs, Inc.

(i) The owners and operators of a unit governed by an approved repowering plan shall be liable for any violation of the plan or this section at that or any other unit governed by the plan, including liability for fulfilling the obligations specified in part 77 of this chapter an section 411 of the Act.

(ii) The units governed by the plan under paragraph (b)(2) of this section shall continue to have a common designated representative until the existing unit is permanently retired under the plan.

(4) *Terminations.* Except as provided in paragraph (g) of this section, a repowering extension plan shall not be terminated after December 31, 1999.

Subpart E—Acid Rain Permit Contents

40 CFR 72.50 General.

(a) Each Acid Rain permit (including any draft or proposed Acid Rain permit) will contain the following elements in a format prescribed by the Administrator:

(1) All elements required for a complete Acid Rain permit application under §72.31 of this part, as approved or adjusted by the permitting authority;

(2) The applicable Acid Rain emissions limitation for sulfur dioxide; and

(3) The applicable Acid Rain emissions limitation for nitrogen oxides.

(b) Each Acid Rain permit is deemed to incorporate the definitions of terms under §72.2 of this part.

40 CFR 72.51 Permit shield.

Each affected unit operated in accordance with the Acid Rain permit that governs the unit and that was issued in compliance with title IV of the Act, as provided in this part and parts 73, 75, 77, and 78 of this chapter, and the regulations implementing section 407 of the Act, shall be deemed to be operating in compliance with the Acid Rain Program, except as provided in §72.9(g)(6) of this part.

Subpart F—Federal Acid Rain Permit Issuance Procedures

40 CFR 72.60 General.

(a) *Scope.* This subpart contains the procedures for federal issuance of Acid Rain permits for Phase I of the Acid Rain Program and Phase II for sources in States or geographic areas where the Administrator is the permitting authority as provided under regulations implementing title V of the Act. The procedures in this subpart do not apply to the issuance of Acid Rain permits by

Copyright 1993-1997, The Bureau of National Affairs, Inc.

repowering technology specified in the plan was properly constructed and tested on such unit but was unable to achieve the emissions reduction limitations specified in the plan and that it is economically or technologically infeasible to modify the technology to achieve such limits, the unit shall not be deemed in violation of the Act because of such failure to achieve the emissions reduction limitations. In order to be properly constructed and tested, the repowering technology shall be constructed at least to the extent necessary for direct testing of the multiple combustion emissions (including sulfur dioxide and nitrogen oxides) from such unit while operating the technology at nameplate capacity. Where the preceding requirements of this paragraph are met:

(i) The permitting authority shall revise the Acid Rain portion of the operating permit in accordance with paragraphs (g)(2) (ii) and (iii) and §72.81 (permit modification).

(ii) The existing unit may be retrofitted or repowered with another clean coal or other available control technology.

(iii) The repowering extension will continue in effect until the earlier of the date the existing unit commences commercial operation with such control technology or December 21, 2003. The Administrator will allocate or deduct allowances as necessary to ensure that allowances are allocated in accordance with paragraph (f)(3)of this section applying the repowering extension under this paragraph.

(h) *Special Provisions.*

(1) *Emissions Limitations.*

(i) *Sulfur Dioxide.* Allowances allocated during the repowering extension under paragraphs (f)(3) and (g)(2)(iii) of this section to a unit governed by an approved repowering extension plan shall not be transferred to any Allowance Tracking System account other than the unit accounts of other units at the same source as that unit.

(ii) *Nitrogen Oxides.* Any existing unit governed by an approved repowering extension plan shall be subject to the Acid Rain emissions limitations for nitrogen oxides in accordance with section 407 of the Act and regulations implementing section 407 of the Act beginning on the date that the unit is removed from operation to install the repowering technology or is permanently removed from service.

(iii) No existing unit governed by an approved repowering extension plan shall be eligible for a waiver under section 111(j) of the Act.

(iv) No new unit governed by an approved repowering extension plan shall receive an exemption from the requirements imposed under section 111 of the Act.

(2) *Reporting Requirements.* Each unit governed by an approved repowering extension plan shall comply with the special reporting requirements of §72.94 .

(3) *Liability.*

Copyright 1993-1997, The Bureau of National Affairs, Inc.

(3) *Allowance Allocation.* The Administrator will allocate allowances after issuance of an operating permit containing the repowering extension plan (or, if the plan is conditionally approved, after the revision of the Acid Rain permit under §72.40(c)) and of the Administrator's final determination, under paragraph (d)(4) of this section, that the technology to be used in such plan is a qualifying repowering technology. Allowances will be allocated (including a pro rata allocation for any fraction of a year), as follows:

(i) To the existing unit under the approved plan, in accordance with §73.21 of this chapter during the repowering extension under paragraph (f)(2)(ii) of this section; and

[§72.44(f)(3)(i) amended at 58 FR 15647, March 23, 1993]

(ii) To the existing unit under the approved plan under paragraph (b)(1) of this section or, in lieu of any further allocations to the existing unit, to the new unit under the approved plan under paragraph (b)(2) of this section, in accordance with §73.21 of this chapter, after the repowering extension under paragraph (f)(2)(ii) of this section ends.

[§72.44(f)(3)(ii) amended at 58 FR 15647, March 23, 1993]

(g) *Failed Repowering Projects.*

(1) (i) If, at any time before the end of the repowering extension under paragraph (f)(2)(ii) of this section, the designated representative of a unit governed by an approved repowering extension plan notifies the Administrator in writing that the owners and operators have decided to terminate efforts to properly design, construct, and test the repowering technology specified in the plan before completion of construction or start-up testing and demonstrates, in a proposed permit revision, to the Administrator's satisfaction that such efforts were in good faith, the unit shall not be deemed in violation of the Act because of such a termination. Where the preceding requirements of this paragraph are met, the permitting authority shall revise the operating permit in accordance with this paragraph and paragraph (g)(1)(ii) of this section and §72.81 (permit modification).

(ii) Regardless of whether notification under paragraph (g)(1)(i) of this section is given, the repowering extension will end beginning on the earlier of the date of such notification or the date by which the designated representative was required to give such notification under §72.94(d). The Administrator will deduct allowances (including a pro rata deduction for any fraction of a year) from the Allowance Tracking System account of the existing unit to the extent necessary to ensure that, beginning the day after the extension ends, allowances are allocated in accordance with §73.21(c)(1) of this chapter.

[§72.44(g)(1)(ii) amended at 58 FR 15647, March 23, 1993]

(2) If the designated representative of a unit governed by an approved repowering extension plan demonstrates to the satisfaction of the Administrator, in a proposed permit revision, that the

Copyright 1993-1997, The Bureau of National Affairs, Inc.

(5) For a plan under paragraph (b)(2) of this section:

(i) Identification of the new unit. A new unit shall not be included in more than one repowering extension plan.

(ii) Certification that the new unit will replace the existing unit.

(iii) Certification that the new unit has the same designated representative as the existing unit.

(iv) Certification that the existing unit will be permanently retired from service on or before the date the new unit commences commercial operation.

(6) The special provisions of paragraph (h) of this section.

(f) *Permitting Authority's Action on Repowering Extension Plan.*

(1) The permitting authority shall not approve a repowering extension plan until the Administrator makes a conditional determination that the technology is a qualified repowering technology, unless the permitting authority conditionally approves such plan subject to the conditional determination of the Administrator.

(2) *Permit Issuance.*

(i) Upon a conditional determination by the Administrator that the technology to be used in the repowering extension plan is a qualified repowering technology and a determination by the permitting authority that such plan meets the requirements of this section, the permitting authority shall issue the Acid Rain portion of the operating permit including:

(A) The approved repowering extension plan; and

(B) A schedule of compliance with enforceable milestones for construction, installation, and commencement of operation of the repowering technology and other requirements necessary to ensure that Phase II emission reduction requirements under this section will be met.

(ii) Except as otherwise provided in paragraph (g) of this section, the repowering extension shall be in effect starting January 1, 2000 and ending on the day before the date (specified in the Acid Rain permit) on which the existing unit will be removed from operation to install the qualifying repowering technology or will be permanently removed from service for replacement by a new unit with such technology; *provided* that the repowering extension shall end no later than December 31, 2003.

(iii) The portion of the operating permit specifying the repowering extension and other requirements under paragraph (f)(2)(i) of this section shall be subject to the Administrator's final determination, under paragraph (d)(4) of this section, that the technology to be used in the repowering extension plan is a qualifying repowering technology.

Copyright 1993-1997, The Bureau of National Affairs, Inc.

to which any by- products may be sold.

(iii) If the repowering technology is not listed in the definition of a qualified repowering technology in §72.2 , a vendor certification of the guaranteed performance characteristics that demonstrate that the technology meets the criteria specified for non-listed technologies in §72.2; *provided* that the existence of such guarantee shall not be a defense against the failure to meet the criteria for non- listed technologies.

(2) The Administrator may request any supplemental information that is deemed necessary to review the petition for approval of repowering technology.

(3) The Administrator shall review the petition for approval of repowering technology and, in consultation with the Secretary of Energy, shall make a conditional determination of whether the technology described in the petition is a qualifying repowering technology.

(4) Based on the petition for approval of repowering technology and the information provided under paragraph (d)(2) of this section and §72.94(a), the Administrator will make a final determination of whether the technology described in the petition is a qualifying repowering technology.

(e) *Contents of Repowering Extension Plan.* A complete repowering extension plan shall include the following elements in a format prescribed by the Administrator:

(1) Identification of the existing unit governed by the plan.

(2) The unit's federally-approved State Implementation Plan sulfur dioxide emissions limitation.

(3) The unit's 1995 actual SO_2 emissions rate.

(4) A schedule for construction, installation, and commencement of operation of the repowering technology approved or submitted for approval under paragraph (d) of this section, with dates for the following milestones:

(i) Completion of design engineering;

(ii) For a plan under paragraph (b)(1) of this section, removal of the existing unit from operation to install the qualified repowering technology;

(iii) Commencement of construction;

(iv) Completion of construction;

(v) Start-up testing;

(vi) For a plan under paragraph (b)(2) of this section, shutdown of the existing unit; and

(vii) Commencement of commercial operation of the repowering technology.

Copyright 1993-1997, The Bureau of National Affairs, Inc.

(2) A repowering extension does not exempt the owner or operator for any unit governed by the repowering plan from the requirement to comply with such unit's Acid Rain emissions limitations for sulfur dioxide.

(b) The designated representative of any unit meeting the requirements of paragraph (a)(1)(i) of this section may include in the unit's Phase II Acid Rain permit application a repowering extension plan that includes a demonstration that:

(1) The unit will be repowered with a qualifying repowering technology in order to comply with the Phase II emissions limitations for sulfur dioxide; or

(2) The unit will be replaced by a new utility unit that has the same designated representative and that is located at a different site using a qualified repowering technology and the existing unit will be permanently retired from service on or before the date on which the new utility unit commences commercial operation.

(c) In order to apply for a repowering extension, the designated representative of a unit under paragraph (a) of this section shall:

(1) Submit to the permitting authority, by January 1, 1996, a complete repowering extension plan;

(2) Submit to the Administrator, before June 1, 1997, a complete petition for approval of repowering technology; and

(3) If the repowering extension plan is submitted for conditional approval, submit by December 31, 1997, a notification to activate the plan in accordance with §72.40(c).

(d) *Contents and Review of Petition for Approval of Repowering Technology.*

(1) A complete petition for approval of repowering technology shall include the following elements, in a format prescribed by the Administrator, concerning the technology to be used in a plan under paragraph (b) of this section and may follow the repowering technology demonstration protocol issued by the Administrator:

(i) Identification and description of the technology.

(ii) Vendor certification of the guaranteed performance characteristics of the technology, including:

(A) Percent removal and emission rate of each pollutant being controlled;

(B) Overall generation efficiency; and

(C) Information on the state, chemical constituents, and quantities of solid waste generated (including information on land- use requirements for disposal) and on the availability of a market

Copyright 1993-1997, The Bureau of National Affairs, Inc.

plan shall be liable for any violation of the plan or this section at that or any other unit governed by the plan, including liability for fulfilling the obligations specified in part 77 of this chapter and section 411 of the Act.

(4) *Termination.*

(i) A reduced utilization plan shall be in effect only in Phase I for the calendar years specified in the plan or until the calendar year for which a termination of the plan takes effect; *provided* that no reduced utilization plan that designates a compensating unit that serves as a control unit under a Phase I extension plan shall be terminated, and no such unit shall be de-designated as a compensating unit, before the end of Phase I.

(ii) To terminate a reduced utilization plan for a given calendar year prior to its last year for which the plan was approved:

(A) A notification to terminate in accordance with §72.40(d) shall be submitted no later than 60 days before the allowance transfer deadline applicable to the given year; and

(B) In the notification to terminate, the designated representative of any compensating unit governed by the plan shall state that he or she surrenders for deduction from the unit's Allowance Tracking System account allowances equal in number to, and with the same or an earlier compliance use date as, those allocated under paragraph (d) of this section to each compensating unit for the calendar years for which the plan is to be terminated. The designated representative may identify the serial numbers of the allowances to be deducted. In the absence of such identification, allowances will be deducted on a first-in, first-out basis under §73.35(c)(2) of this chapter.

(iii) If the requirements of paragraph (f)(3)(ii) are met and upon revision of the permit to terminate the reduced utilization plan, the Administrator will deduct the allowances specified in paragraph (f)(3)(ii)(B) of this section. No reduced utilization plan shall be terminated, and no unit shall be de-designated as Phase I unit, unless such deduction is made.

40 CFR 72.44 Phase II repowering extensions.

(a) *Applicability.*

(1) This section shall apply to the designated representative of:

(i) Any existing affected unit that is a coal-fired unit and has a 1985 actual SO_2 emissions rate equal to or greater than 1.2 lbs/mmBtu.

(ii) Any new unit that will be a replacement unit, as provided in paragraph (b)(2) of this section, for a unit meeting the requirements of paragraph (a)(1)(i) of this section.

(iii) Any oil and/or gas-fired unit that has been awarded clean coal technology demonstration funding as of January 1, 1991 by the Secretary of Energy.

Copyright 1993-1997, The Bureau of National Affairs, Inc.

emissions limitations in approving or disapproving the compensating unit. The specified method will not treat a non-unit- specific emissions limitation as a unit-specific emissions limitation and will not result in compensating units retaining allowances allocated under paragraph (d)(1) of this section for emissions reductions necessary to meet a non-unit-specific emissions limitation. Such method may require an end-of-year review and the disapproval and de-designation, and adjustment of the allowances allocated to, the compensating unit and may require the designated representative of the compensating unit to surrender allowances by the allowance transfer deadline of the year that is subject to the review. Any surrendered allowances shall have the same or an earlier compliance use date as the allowances originally allocated for the year, and the designated representative may identify the serial numbers of the allowances to be deducted. In the absence of such identification, such allowances will be deducted on a first-in, first-out basis under §73.35(c)(2) of this chapter.

[§72.43(d) revised at 59 FR 60229, Nov. 22, 1994]

(e) *Failure to Submit a Plan.* The designated representative of a Phase I unit will be deemed not to violate, during a Phase I calendar year, the requirement to submit a reduced utilization plan under paragraph (b)(1) or (4) of this section if the designated representative complies with the allowance surrender and other requirements of §§72.33 , 72.91 , and 72.92 of this chapter.

[§72.43(e) revised at 60 FR 18468, April 11, 1995]

(f) *Special Provisions.*

(1) *Emissions Limitations.*

(i) Any compensating unit designated under an approved reduced utilization plan shall become a Phase I unit from January 1 of the calendar year in which the plan takes effect until January 1 of the year for which the plan is no longer in effect or is terminated, except that such unit shall not become subject to the Acid Rain emissions limitations for nitrogen oxides in Phase I under section 407 of the Act and regulations implementing section 407 of the Act.

(ii) The designated representative of any Phase I unit (including a unit governed by a reduced utilization plan relying on energy conservation, improved unit efficiency, sulfur-free generation, or a compensating unit) shall surrender allowances, and the Administrator will deduct or return allowances, in accordance with paragraph (d)(2) of this section and subpart I of this part.

[§72.43(f)(1)(ii) amended at 59 FR 60229, Nov. 22, 1994]

(2) *Reporting Requirements.* The designated representative of any Phase I unit (including a unit governed by a reduced utilization plan relying on energy conservation, improved unit efficiency, sulfur- free generation, or a compensating unit) shall comply with the special reporting requirements under §§72.91 and 72.92 .

(3) *Liability.* The owners and operators of a unit governed by an approved reduced utilization

Copyright 1993-1997, The Bureau of National Affairs, Inc.

amount under paragraph (c)(4)(ii)(C) of this section. If the difference calculated in the prior sentence for any year exceeds the lesser of 10 percent of the amount under paragraph (c)(4)(ii)(B) of this section or 200 tons, the unit shall not be designated as a compensating unit for the year. Where the most stringent unit-specific federally enforceable or State enforceable SO_2 emissions limitation is not the same for every year in 1995-1999, the difference shall be calculated separately for each year.

(E) The allowance allocation calculated as the amount under paragraph (c)(4)(ii)(B) of this section. If the compensating unit is a new unit, it shall be deemed to have a baseline of zero and shall be allocated no allowances.

(F) Where, as of November 15, 1990, a non-unit-specific federally enforceable or State enforceable SO_2 emissions limitation covers the unit for any year in 1995-1999, the designated representative shall state each such limitation and propose a method for applying unit-specific and non-unit-specific emissions limitations under paragraph (d) of this section.

[§72.43(c)(4)(ii) revised at 59 FR 60229, Nov. 22, 1994]

(iii) For each sulfur-free generator, identification of any other Phase I units that designate the same sulfur-free generator in another plan submitted under paragraphs (b) (1) or (4) of this section.

(iv) For each compensating unit or sulfur-free generator not in the dispatch system of the unit reducing utilization under the plan, the system directives or power purchase agreements or other contractual agreements governing the acquisition, by the dispatch system, of the electrical energy that is generated by the compensating unit or sulfur-free generator and on which the plan relies to accomplish reduced utilization. Such contractual agreements shall identify the specific compensating unit or sulfur-free generator from which the dispatch system acquires such electrical energy.

[§72.43(c)(4)(iv) revised at 59 FR 60229, Nov. 22, 1994]

(5) The special provisions in paragraph (f) of this section.

(d) *Administrator's Action.*

(1) If the Administrator approves the reduced utilization plan, he or she will allocate allowances, as provided in the approved plan, to the Allowance Tracking System account for any designated compensating unit upon issuance of an Acid Rain permit containing the plan, except that, if the plan is conditionally approved, the allowances will be allocated upon revision of the permit to activate the plan.

(2) Where, as of November 15, 1990, a non-unit-specific federally enforceable or State enforceable emissions limitation covers the unit for any year during 1995-1999, the Administrator will specify on a case-by-case basis a method for using unit-specific and non-unit specific

Copyright 1993-1997, The Bureau of National Affairs, Inc.

(c) *Contents of Reduced Utilization Plan.* A complete reduced utilization plan shall include the following elements in a format prescribed by the Administrator:

(1) Identification of each Phase I unit for which the owners and operators plan reduced utilization.

(2) Except where the designated representative requests conditional approval of the plan, the first calendar year and, if known, the last calendar year in which the reduced utilization plan is to be in effect. Unless the designated representative specifies an earlier calendar year, the last calendar year shall be deemed to be 1999.

(3) A statement whether the plan designates a compensating unit or relies on sulfur-free generation, any energy conservation measure, or any improved unit efficiency measure to account for any amount of reduced utilization.

(4) If the plan designates a compensating unit, or relies on sulfur-free generation, to account for any amount of reduced utilization:

(i) Identification of each compensating unit or sulfur-free generator.

[§72.43(c)(4)(i) amended at 59 FR 60229, Nov. 22, 1994]

(ii) For each compensating unit.

(A) Each of the following: The unit's 1985 actual SO_2 emissions rate; the unit's 1985 allowable emissions rate; the unit's 1989 actual SO_2 emissions rate; the unit's 1990 actual SO_2 emissions rate; and, as of November 15, 1990, the most stringent unit-specific federally enforceable or State enforceable SO_2 emissions limitation covering the unit for 1995-1999. For purposes of determining the most stringent emissions limitation, applicable emissions limitations shall be converted to lbs/mmBtu in accordance with appendix B of this part. Where the most stringent emissions limitation is not the same for every year in 1995-1999, the most stringent emissions limitation shall be stated separately for each year.

(B) The unit's baseline divided by 2,000 lbs/ton and multiplied by the lesser of the unit's 1985 actual SO_2 emissions rate or 1985 allowable SO_2 emissions rate.

(C) The unit's baseline divided by 2000 lbs/ton and multiplied by the lesser of: The greater of the unit's 1989 or 1990 actual SO_2 emissions rate; or, as of November 15, 1990, the most stringent unit- specific federally enforceable or State enforceable SO_2 emissions limitation covering the unit for 1995-1999. Where the most stringent emissions limitation is not the same for every year in 1995-1999, the calculation in the prior sentence shall be made separately for each year.

(D) The difference between the amount under paragraph (c)(4)(ii)(B) of this section and the

Copyright 1993-1997, The Bureau of National Affairs, Inc.

directly or, in the case of demand-side measures, through payment to another person who purchases the measure.

(iii) Energy conservation measures shall not include:

(A) Conservation programs that are exclusively informational or educational in nature;

(B) Load management measures that lead to reduction of electric energy demands during a utility's peak generating period, unless kilowatt hour savings can be verified under §72.92 ; or

(C) Utilization of industrial waste gases, unless the designated representative certifies that there is no net increase in sulfur dioxide emissions from such utilization.

(iv) For calendar years when the unit's utility system is a subsidiary of a holding company and the unit's dispatch system is or includes all units that are interconnected and centrally dispatched and included in that holding company, then:

(A) Energy conservation measures shall be either demand-side measures implemented in the residence or facility of a customer to whom any utility system in the holding company sells electricity or supply-side measures implemented in facilities of any utility system in the holding company. Such utility system shall pay in whole or in part for the measures either directly or, in the case of demand-side measures, through payment to another person who purchases the measures.

(B) The limitations in paragraph (b)(2)(iii) of this section shall apply.

(3) (i) Improved unit efficiency measures shall be implemented in the unit after December 31, 1987. Such measures include supply-side measures listed in appendix A, section 2.1 of part 73 of this chapter.

[§72.43(b)(3)(i) amended at 59 FR 60229, Nov. 22, 1994]

(ii) The utility system shall pay in whole or in part for the improved unit efficiency measures.

(4) The requirement to submit a reduced utilization plan shall apply in the event that the owners and operators of a Phase I unit decide, at any time during any Phase I calendar year, to rely on the method of compliance in paragraph (b)(1) of this section. In that case, the designated representative shall submit a reduced utilization plan not later than 90 days, or a notification to activate a conditionally approved plan in accordance with §72.40(c) not later than 60 days, before the allowance transfer deadline applicable to the first year for which the plan is to take effect.

(5) The designated representative of each source with a unit designated as a compensating unit in any plan submitted under paragraphs (b) (1) or (4) of this section shall incorporate by reference in the permit application each such plan.

Copyright 1993-1997, The Bureau of National Affairs, Inc.

(ii) Any other unit that becomes a Phase I unit (including any unit designated as a compensating unit under this section or a substitution unit under §72.41).

(2) Any affected unit that:

(i) Is not otherwise subject to any Acid Rain emissions limitation or emissions reduction requirements during Phase I; and

(ii) Meets the requirement, as set forth in paragraphs (c)(4)(ii) and (d) of this section, that for each year for which the unit is to be covered by the reduced utilization plan, the unit's baseline divided by 2,000 lbs/ton and multiplied by the lesser of the unit's 1985 actual SO_2 emissions rate or 1985 allowable SO_2 emissions rate does not exceed the sum of

(A) The lesser of 10 percent of the amount under paragraph (a)(2)(ii) of this section or 200 tons, plus

(B) The unit's baseline divided by 2,000 lbs/ton and multiplied by the lesser of: The greater of the unit's 1989 or 1990 actual SO_2 emissions rate; or, as of November 15, 1990, the most stringent federally enforceable or State enforceable SO_2 emissions limitation covering the unit for 1995-1999.

[§72.43(a)(2) added at 59 FR 60229, Nov. 22, 1994]

(b) (1) The designated representative of any unit under paragraph (a)(1)of this section shall include in the Acid Rain permit application for the unit a reduced utilization plan, meeting the requirements of this section, when the owners and operators of the unit plan to:

(i) Reduce utilization of the unit below the unit's baseline to achieve compliance, in whole or in part, with the unit's Phase I Acid Rain emissions limitations for sulfur dioxide; and

(ii) Accomplish such reduced utilization through one or more of the following:

(A) Shifting generation of the unit to a unit under paragraph (a)(2) of this section or to a sulfur-free generator; or

[§72.43(b)(1)(ii)(A) amended at 59 FR 60229, Nov. 22, 1994]

(B) Using one or more energy conservation measures or improved unit efficiency measures.

(2) (i) Energy conservation measures shall be either demand-side measures implemented after December 31, 1987 in the residence or facility of a customer to whom the unit's utility system sells electricity or supply-side measures implemented after December 31, 1987 in facilities of the unit's utility system.

(ii) The utility system shall pay in whole or in part for the energy conservation measures either

Copyright 1993-1997, The Bureau of National Affairs, Inc.

section (as adjusted under paragraph (d) of this section and by the Administrator in approving the Phase I extension plan) unless the transfer unit is the last unit allocated Phase I extension reserve allowances under the plan.

(2) *Monitoring Requirements.* Each control unit shall comply with the special monitoring requirements for Phase I extension plans in accordance with part 75 of this chapter.

(3) *Reporting Requirements.* Each control and transfer unit shall comply with the special reporting requirements for Phase I extension plans in accordance with §72.93 .

(4) *Liability.* The owners and operators of a control or transfer unit governed by an approved Phase I extension plan shall be liable for any violation of the plan or this section at that or any other unit governed by the plan, including liability for fulfilling the obligations specified in part 77 of this chapter and section 411 of the Act.

(5) *Termination.* A Phase I extension plan shall be in effect only in Phase I, and no Phase I extension plan shall be terminated before the end of Phase I. The designated representative may, however, withdraw a Phase I extension plan at any time prior to issuance of the Phase I Acid Rain permit that includes the Phase I extension plan, as adjusted.

[1] In the case of a transfer unit that shares a common stack with a unit not listed in Table 1 of §73.10(a) of this chapter and whose emissions of sulfur dioxide are not monitored separately or apportioned in accordance with part 75 of this chapter, the projected figures for the transfer unit under paragraph (c)(7) of this section must be for the units combined.
[2] In the case of a transfer unit that shares a common stack with a unit not listed in Table 1 of §73.10(a) of this chapter where the units are not monitored separately or apportioned in accordance with part 75 of this chapter, the combined emissions of both units will be deemed to be the transfer unit's emissions for purposes of applying paragraph (f)(1)(i) of this section.

40 CFR 72.43 Phase I reduced utilization plans.

(a) *Applicability.* Applicability. This section shall apply to the designated representative of:

[§72.43(a) introductory text amended at 59 FR 60229, Nov. 22, 1994]

(1) Any Phase I unit, including:

[§72.43(a)(1) introductory text amended at 59 FR 60229, Nov. 22, 1994]

(i) Any unit listed in Table 1 of §73.10(a) of this chapter; and

Copyright 1993-1997, The Bureau of National Affairs, Inc.

transfer unit in the order in which it is listed.

(iii) For 1997, to each control unit in the order in which it is listed in the plan, then likewise for 1998, and then likewise for 1999.

(iv) The Administrator will allocate any Phase I extension reserve allowances returned to the Administrator to the next Phase I extension plan, in the rank order established under paragraph (e)(1)(iii) of this section, that continues to meet the requirements of this section and this part.

(f) *Special Provisions.*

(1) *Emissions Limitations.*

(i) *Sulfur Dioxide.*

(A) If a control or transfer unit governed by an approved Phase I extension plan emits in 1997, 1998, or 1999 sulfur dioxide in excess of the projected controlled emissions for the unit specified for the year under paragraph (c)(7) of this section as adjusted under paragraph (d) of this section and by the Administrator in approving the Phase I extension plan, the Administrator will deduct allowances equal to such exceedence from the unit's annual allowance allocation in the following calendar year.[2(2)]

(B) Failure to demonstrate at least a 90% reduction of sulfur dioxide in 1997, 1998, or 1999 in accordance with part 75 of this chapter at a control unit governed by an approved Phase I extension plan shall be a violation of this section. In the event of any such violation, in addition to any other liability under the Act, the Administrator will deduct allowances from the control unit's compliance subaccount for the year of the violation. The deduction will be calculated as follows:

Allowances deducted=(1+(percent reduction achieved + 90%))×Phase I extension reserve allowances received

where:

"Percent reduction achieved" is the percent reduction determined in accordance with part 75 of this chapter.

"Phase I extension reserve allowances received" is the number of Phase I extension reserve allowances allocated for the year under paragraph (e)(2)(ii) of this section.

(ii) *Nitrogen Oxides.*

(A) Beginning on January 1, 1997, each control and transfer unit shall be subject to the Acid Rain emissions limitations for nitrogen oxides.

(B) Notwithstanding paragraph (f)(1)(ii)(A) of this section, a transfer unit shall be subject to the Acid Rain emissions limitations for nitrogen oxides, under section 407 of the Act and regulations implementing section 407 of the Act, beginning on January 1 of any year for which a transfer unit is allocated fewer Phase I extension reserve allowances than the maximum amount that the designated representative could have requested in accordance with paragraph (c)(5) of this

Copyright 1993-1997, The Bureau of National Affairs, Inc.

(A) The award of allowances if the application was complete and the Phase I extension reserve as not oversubscribed;

(B) A determination that the application was incomplete and is disapproved; or

(C) If the Phase I extension reserve was oversubscribed, a list of the applications received on that date, the number of Phase I extension allowances requested in each application, and the date, time, and location of a lottery to determine the order of receipt for all applications received on that date.

(vii) The date of a lottery for all applications received on a given day will not be earlier than 15 days after the Administrator notifies each designated representative whose applications were received on that date.

(viii) Any early ranking application may be withdrawn from the lottery if a letter signed by the designated representative of each unit governed by the application and requesting withdrawal is received by the Administrator before the lottery takes place.

(2) *Phase I extension plans.*

(i) The Administrator will act on each Phase I extension plan in the order that the early ranking application for that plan was received or, if no early ranking application was received, in the order that the Phase I extension plan was received, as determined under paragraph (e)(1)(iii) of this section.

(ii) Based on the allowances requested under paragraph (c)(9) of this section, as adjusted under paragraph (d) of this section and by the Administrator in approving the Phase I extension plan, the Administrator will allocate Phase I extension reserve allowances to the Allowance Tracking System account of each control and transfer unit upon issuance of an Acid Rain permit containing the approved Phase I extension plan. The allowances will be allocated using the procedures set forth in paragraph (e)(3) of this section.

(iii) The Administrator will not approve a Phase I extension plan, even if it meets the requirements of this section, unless unallocated allowances remain in the Phase I extension reserve at the time the Administrator acts on the plan.

(3) *Allowance Allocations.* In addition to any allowances allocated in accordance with Table 1 of §73.10(a) of this chapter and other approved compliance options, the Administrator will allocate Phase I extension reserve allowances to each eligible unit in a Phase I extension plan in the following order.

(i) For 1995, to each control unit in the order in which it is listed in the plan and then to each transfer unit in the order in which it is listed.

(ii) For 1996, to each control unit in the order in which it is listed in the plan and then to each

Copyright 1993-1997, The Bureau of National Affairs, Inc.

reference as modified by the newly submitted elements; *provided* that the Phase I extension plan shall not add any new control units or increase the total Phase I extension allowances requested; or

(iii) All elements required for an early ranking application and a statement that no early ranking application for the plan was submitted.

(e) *Administrator's Action.*

(1) *Early ranking applications.*

(i) The Administrator may approve in whole or in part or with changes or conditions, as appropriate, or disapprove an early ranking application.

(ii) The Administrator will act on each early ranking application in the order of receipt.

(ii) The Administrator will determine the order of receipt by the following procedures:

(A) Hand-delivered submissions and mailed submissions will be deemed to have been received on the date they are received by the Administrator; *provided* that all submissions received by the Administrator prior to the 40th day after publication of this subpart in the **Federal Register** will be deemed received on the 40th day.

(B) All submissions received by the Administrator on the same day will be deemed to have been received simultaneously.

(C) The order of receipt of all submissions received simultaneously will be determined by a public lottery if allocation of Phase I extension reserve allowances to each of the simultaneous submissions would result in oversubscription of the Phase I extension reserve.

(iv) Based on the allowances requested under paragraph (c)(9) of this section, as adjusted by the Administrator in approving the early ranking application, the Administrator will award Phase I extension reserve allowances for each complete early ranking application to the extent that allowances that have not been awarded remain in the Phase I extension reserve at the time the Administrator acts on the application. The allowances will be awarded in accordance with the procedures set forth the allocation of reserve allowances in paragraph (e)(3), of this section.

(v) The Administrator's action on an early ranking application shall be conditional on the Administrator's action on a timely and complete Acid Rain permit application that includes a complete Phase I extension plan and, where the plan includes a unit under paragraph (a)(1) (ii) and (iii) of this section, a complete substitution plan or reduced utilization plan, as appropriate.

(vi) Not later than 15 days after receipt of each early ranking application, the Administrator will notify, in writing, the designated representative of each application of the date that the early ranking application was received and one of the following:

Copyright 1993-1997, The Bureau of National Affairs, Inc.

(9) The total of Phase I extension reserve allowances requested for all units in the plan for 1995 through 1999.

(10) With regard to each executed contract for the design engineering and construction of qualifying Phase I technology at each control unit governed by the early ranking application, either a copy of the contract or a certification that the contract is on site at the source and will be submitted to the Administrator upon written request. The contract or contracts may be contingent on the Administrator approving the Phase I extension plan.

(11) For each contract for which a certification is submitted under paragraph (c)(10) of this section, a binding letter agreement, signed and dated by each party and specifying:

(i) The type of qualifying Phase I technology to which the contract applies;

(ii) The parties to the contract;

(iii) The date each party executed the contracts;

(iv) The unit to which the contract applies;

(v) A brief list identifying each provision of the contract;

(vi) Any dates to which the parties agree, including construction completion date; and

(vii) The total dollar amount of the contract.

(12) A vendor certification of the sulfur dioxide removal efficiency guaranteed to be achievable by the qualifying Phase I technology for the type and range of fossil fuels (before any treatment prior to combustion) that will be used at the control unit; *provided* that a vendor certification shall not be a defense against a control unit's failure to achieve 90% control of sulfur dioxide.

(13) The date (not later than December 31, 1996) on which the owners and operators plan to commence operation of the qualifying Phase I technology.

(14) The special provisions of paragraph (f) of this section.

(d) *Contents of Phase I Extension Plan.* A complete Phase I extension plan shall include the following elements in a format prescribed by the Administrator:

(1) Identification of each unit in the plan.

(2) (i) A statement that the elements in the Phase I extension plan are identical to those in the previously submitted early ranking application for the plan and that such early ranking application is incorporated by reference; or

(ii) All elements that are different from those in the previously submitted early ranking application for the plan and a statement that the early ranking application is incorporated by

Copyright 1993-1997, The Bureau of National Affairs, Inc.

uncontrolled emissions rate (i.e., the emissions rate in the absence of title IV of the Act) for 1995 (in lbs/mmBtu), divided by 2000 lbs/ton.

(ii) The projected annual utilization (in mmBtu) for 1996 multiplied by the projected uncontrolled emissions rate (i.e., the emissions rate in the absence of title IV of the Act) for 1996 (in lbs/mmBtu), divided by 2000 lbs/ton.

(5) For each control and transfer unit, the number of Phase I extension reserve allowances requested for 1995 and for 1996, not to exceed the difference between:

(i) The lesser of the value for the unit under paragraph (c)(3) of this section and the value for the unit for that year under paragraph (c)(4) of this section, and

(ii) Each unit's baseline multiplied by 2.5 lb/mmBtu, divided by 2000 lbs/ton.

(6) Documentation that the annual emissions reduction obligations transferred from all transfer units to all control units do not exceed those authorized under this section, as follows:

(i) For each control unit, the difference, calculated separately for 1995 and 1996, between:

(A) The control unit's allowance allocation in Table 1 of §73.10(2) of this chapter, the allocation under §72.41 if the control unit is a substitution unit, or the allocation under §72.43 if the control unit is a compensating unit; and

(B) The projected emissions resulting from 90% control after installing the qualifying Phase I technology, i.e., 10% of the projected uncontrolled emissions for the control unit for the year in accordance with paragraph (c)(4) of this section.

(ii) The sum, by year, of the results under paragraph (c)(6)(i) of this section for all control units.

(iii) The sum, by year, of Phase I extension reserve allowances requested for all transfer units.

(iv) A showing that, for each year, the sum under paragraph (c)(6)(ii) of this section is greater than or equal to the sum under paragraph (c)(6)(iii) of this section.

(7) For each control and transfer unit, the projected controlled emissions for 1997, for 1998, and for 1999 calculated as follows:
Projected annual utilization (in mmBtu) multiplied by the projected controlled emission rate (in lbs/mmBtu), divided by 2000 lbs/ton.[1(1)]

(8) For each control unit, the number of Phase I extension reserve allowances requested for 1997, for 1998, and for 1999, calculated as follows:
The unit's baseline multiplied by 1.2 lbs/mmBtu and divided by 2000 lbs/ton, minus the projected controlled emissions (in tons/yr) under paragraph (c)(7) of this section for the given year.

Copyright 1993-1997, The Bureau of National Affairs, Inc.

Phase I emissions reduction obligation shall be transferred in whole or in part to one or more control units.

(3) A Phase I extension does not exempt the owner or operator for any unit governed by the Phase I extension plan from the requirement to comply with such unit's Acid Rain emissions limitations for sulfur dioxide.

(b) To apply for a Phase I extension:

(1) The designated representative for each source with a control unit may submit an early ranking application for a Phase I extension plan in person, beginning on the 40th day after publication of this subpart in the FEDERAL REGISTER, between the hours of 9 a.m. and 5 p.m. Eastern Standard Time at Acid Rain Division, Attn: Early Ranking, U.S. Environmental Protection Agency, 501 3rd Street NW., 4th floor, Washington, DC; or send the application by regular mail, certified mail, or overnight delivery service to Acid Rain Division, Attn: Early Ranking, U.S. Environmental Protection Agency, 6204 J, 401 M Street, SW., Washington, DC 20460.

(2) By February 15, 1993:

(i) The designated representative for each source with a control unit shall submit a Phase I extension plan as a part of the Acid Rain permit application for the source, and

(ii) The designated representative for each source with a unit designated as a transfer unit in any plan submitted under paragraph (b)(2)(i) of this section shall incorporate in the Acid Rain permit application each such plan.

(c) *Contents of Early Ranking Application.* A complete early ranking application shall include the following elements in a format prescribed by the Administrator:

(1) Identification of each control unit. All control units in an application must be located at the same source. If the control unit is not a unit under paragraph (a)(1)(i) of this section, a substitution plan or a reduced utilization plan governing the unit shall be submitted by the deadline for submitting a Phase I permit application.

(2) Identification of each transfer unit. A unit shall not be a transfer unit in more than one early ranking application.

(3) For each control and transfer unit, the total tonnage of sulfur dioxide emitted in 1988 plus the total tonnage of sulfur dioxide emitted in 1989, divided by 2. The 1988 and 1989 tonnage figures shall be consistent with the data filed on EIA form 767 for those years and the conversion methodology specified in Appendix B of this part.

(4) For each control and transfer unit:

(i) The projected annual utilization (in mmBtu) for 1995 multiplied by the projected

Copyright 1993-1997, The Bureau of National Affairs, Inc.

of this section and the unit received from the Administrator for the year, under the Partial Settlement in *Environmental Defense Fund* v. *Carol M. Browner*, No. 93-1203 (D.C. Cir. 1993) (signed May 4, 1993), a total number of allowances equal to the unit's baseline multiplied by the lesser of the unit's 1985 actual SO_2 emissions rate or 1985 allowable SO_2 emissions rate.

(1) Except as provided in paragraph (e)(3)(iv)(D)(*2*) of this section, paragraph (e)(3)(iv)(D) of this section shall apply to the first year in Phase I for which the unit is and remains an active substitution unit.

(2) If the unit has a Group 1 boiler under part 76 of this chapter and is and remains an active substitution unit during 1995, paragraph (e)(3)(iv)(D) of this section shall apply to 1995 and to the second year in Phase I for which the unit is and remains an active substitution unit.

(3) If there is a change in the owners, operators, or designated representative of the substitution unit or the Phase I unit during a year under paragraph (e)(3)(iv)(D)(*1*) or (*2*) of this section and, with the change, the units do not have a common owner, operator, or designated representative, then the designated representatives for such units shall submit a notification to terminate the plan so that the plan will terminate as of January 1 of the calendar year during which the change is made. If the plan is not terminated in accordance with the prior sentence, the Administrator, on his or her own motion, will terminate the plan and deduct the allowances required to be surrendered under paragraph (e)(3)(ii)of this section.

[§72.41(e)(3)(iv) 58 FR 40746, July 30, 1993; revised at 59 FR 60238, Nov. 22, 1994]

40 CFR 72.42 Phase I extension plans.

(a) *Applicability.*

(1) This section shall apply to any designated representative seeking a 2-year extension of the deadline for meeting Phase I sulfur dioxide emissions reduction requirements at any of the following types of units by applying for allowances from the Phase I extension reserve:

(i) a unit listed in Table 1 of §73.10(a) of this chapter;

(ii) a unit designated as a substitution unit in accordance with §72.41 ; or

(iii) a unit designated as a compensating unit in accordance with §72.43 , except a compensating unit that is a new unit.

(2) A unit for which a Phase I extension is sought shall be either:

(i) A control unit, which shall be a unit under paragraph (a)(1) of this section and at which qualifying Phase I technology shall commence operation on or after November 15, 1990 but not later than December 31, 1996; or

(ii) A transfer unit, which shall be a unit under paragraph (a)(1)(i) of this section and whose

Copyright 1993-1997, The Bureau of National Affairs, Inc.

days before the allowance transfer deadline applicable to the given year; and

(B) In the notification to terminate, the designated representative of each unit governed by the plan shall state that he or she surrenders for deduction from the unit's Allowance Tracking System account allowances equal in number to, and with the same or an earlier compliance use date as, those allocated under paragraph (d)(1) of this section for all calendar years for which the plan is to be terminated. The designated representative may identify the serial numbers of the allowances to be deducted. In the absence of such identification, allowances will be deducted on a first-in, first-out basis under §73.35(c)(2) of this chapter.

(iii) If the requirements of paragraph (e)(3)(ii) of this section are met and upon revision of the permit to terminate the substitution plan, the Administrator will deduct the allowances specified in paragraph (e)(3)(ii)(B) of this section. No substitution plan shall be terminated, and no unit shall be de-designated as a Phase I unit, unless such deduction is made.

[§72.41(e)(3)(iii) corrected at 58 FR 40476, July 30, 1993]

(iv) (A) If there is a change in the ownership interest of the owners or operators of any unit under a substitution plan approved as meeting the requirements of paragraph (c)(5)(i) or (ii) of this section or a change in such owners' or operators' right to direct dispatch of electricity from a substitution unit under such a plan and the demonstration under paragraph (c)(5)(i) or (ii) of this section cannot be made, then the designated representatives of the units governed by this plan shall submit a notification to terminate the plan so that the plan will terminate as of January 1 of the calendar year during which the change is made.

(B) Where a substitution plan is approved as meeting the requirements of paragraph (c)(5)(iii) of this section, if there is a change in the agreement under paragraph (c)(5)(iii) of this section and a demonstration that the agreement, as changed, meets the requirements of paragraph (c)(5)(iii) cannot be made, then the designated representative of the units governed by the plan shall submit a notification to terminate the plan so that the plan will terminate as of January 1 of the calendar year during which the change is made. Where a substitution plan is approved as meeting the requirements of paragraph (c)(5)(iii) of this section, if the requirements of the first sentence of paragraph (e)(1)(iii)(A) of this section are not met during a calendar year, then the designated representative of the units governed by the plan shall submit a notification to terminate the plan so that the plan will terminate as of January 1 of such calendar year.

(C) If the plan is not terminated in accordance with paragraphs (e)(3)(iv)(A) or (B) of this section, the Administrator, on his or her own motion, will terminate the plan and deduct the allowances required to be surrendered under paragraph (e)(3)(ii) of this section.

(D) Where a substitution unit and the Phase I unit designating the substitution unit in an approved substitution plan have a common owner, operator, or designated representative during a year, the plan shall not be terminated under paragraphs (e)(3)(iv)(A), (B), or (C) of this section with regard to the substitution unit if the year is as specified in paragraph (e)(3)(iv)(D)(*1*) or (*2*)

Copyright 1993-1997, The Bureau of National Affairs, Inc.

the Act.

(iii) Where an approved substitution plan includes a demonstration under paragraphs (c)(5)(iii) and (c)(6) of this section.

(A) The owners and operators of the substitution unit covered by the demonstration shall implement the actions described under paragraph (c)(6)(ii) of this section, as adjusted by the Administrator in approving the plan or in revising the permit. The designated representative may submit proposed permit revisions changing the description of the actions to be taken in order for the substitution unit to achieve the maximum annual average SO_2 emissions rate under the approved plan and shall include in any such submission a showing that the actions in the changed description will not be implemented during Phase I unless the unit remains a substitution unit. The permit revision will be treated as an administrative amendment, except where the Administrator determines that the change in the description alters the fundamental nature of the actions to be taken and that public notice and comment will contribute to the decision-making process, in which case the permit revision will be treated as a permit modification or, at the option of the designated representative, a fast-track modification.

(B) The designated representative of the unit under paragraph (a)(1) of this section shall surrender allowances, and theAdministrator will deduct allowances, in accordance with paragraph (c)(5)(iii)(C) of this section. The surrender and deduction of allowances as required under the prior sentence shall be the only remedy under the Act for a failure to meet the maximum annual average SO_2 emissions rate, provided that, if such deduction of allowance results in excess emissions, the remedies for excess emissions shall be fully applicable.

[§72.41(e)(1)(iii) added at 59 FR 60238, Nov. 22, 1994]

(2) *Liability.* The owners and operators of a unit governed by an approved substitution plan shall be liable for any violation of the plan or this section at that unit or any other unit that is the first unit's substitution unit or for which the first unit is a substitution unit under the plan, including liability for fulfilling the obligations specified in part 77 of this chapter and section 411 of the Act.

(3) *Termination.*

(i) A substitution plan shall be in effect only in Phase I for the calendar years specified in the plan or until the calendar year for which a termination of the plan takes effect, provided that no substitution plan shall be terminated, and no unit shall be de-designated as a substitution unit, before the end of Phase I if the substitution unit serves as a control unit under a Phase I extension plan.

(ii) To terminate a substitution plan for a given calendar year prior to the last year for which the plan was approved:

(A) A notification to terminate in accordance with §72.40(d) shall be submitted no later than 60

Copyright 1993-1997, The Bureau of National Affairs, Inc.

(1) If the Administrator approves a substitution plan, he or she will allocate allowances to the Allowance Tracking System accounts of the units under paragraph (a)(1) of this section and substitution units, as provided in the approved plan, upon issuance of an Acid Rain permit containing the plan, except that if the substitution plan is conditionally approved, the allowances will be allocated upon revision of the permit to activate the plan.

(2) In no event shall allowances be allocated to a substitution unit, under an approved substitution plan, for any year in excess of the sum calculated and applicable to that year under paragraph (c)(3)(ii) of this section, as adjusted by the Administrator in approving the plan.

[§72.41(d)(2) amended at 59 FR 60229, Nov. 22, 1994]

(3) Where, as of November 15, 1990, a non-unit-specific federally enforceable or State enforceable SO_2 emissions limitation covers the unit for any year during 1995-1999, the Administrator will specify on a case-by-case basis a method for using unit-specific and non-unit-specific emissions limitations in allocating allowances to the substitution unit. The specified method will not treat a non-unit- specific emissions limitation as a unit-specific emissions limitation and will not result in substitution units retaining allowances allocated under paragraph (d)(1) of this section for emissions reductions necessary to meet a non-unit- specific emissions limitation. Such method may require an end-of-year review and the adjustment of the allowances allocated to the substitution unit and may require the designated representative of the substitution unit to surrender allowances by the allowance transfer deadline of the year that is subject to the review. Any surrendered allowances shall have the same or an earlier compliance use date as the allowances originally allocated for the year, and the designated representative may identify the serial numbers of the allowances to be deducted. In the absence of such identification, such allowances will be deducted on a first-in, first-out basis under §73.35(c)(2) of this chapter.

[§72.41(d)(3) added at 59 FR 60229, Nov. 22, 1994]

(e) *Special Provisions.*

(1) *Emissions Limitations.*

(i) Each substitution unit governed by an approved substitution plan shall become a Phase I unit from January 1 of the year for which the plan takes effect until January 1 of the year for which the plan is no longer in effect or is terminated. The designated representative of a substitution unit shall surrender allowances, and the Administrator will deduct allowances, in accordance with paragraph (d)(3) of this section.

[§72.41(e)(1)(i) revised at 59 FR 60229, Nov. 22, 1994]

(ii) Each unit under paragraph (a)(1) of this section, and each substitution unit, governed by an approved substitution plan shall be subject to the Acid Rain emissions limitations for nitrogen oxides in accordance with section 407 of the Act and regulations implementing section 407 of

Copyright 1993-1997, The Bureau of National Affairs, Inc.

(D) The unit under paragraph (a)(2)of this section and the unit under paragraph (a)(1) of this section shall designate a common designated representative during the period that the substitution plan is in effect. Having a common alternate designated representative shall not satisfy the requirement in the prior sentence.

(E) Except as provided in paragraph (c)(6)(i) of this section, the actual SO_2 emissions rate for any year and the average actual SO_2 emissions rate for any period shall be determined in accordance with part 75 of this chapter.

[§72.41(c)(5) revised at 59 FR 60238, Nov. 22, 1994]

(6) A demonstration under paragraph (c)(5)(iii) of this section shall include the following supporting documentation:

(i) The calculation of the average actual SO_2 emissions rate and the most stringent federally enforceable or State enforceable SO_2 emissions limitation for the unit for the four consecutive quarters that immediately preceded the 30-day period ending on the date the substitution plan is submitted to the Administrator. To the extent that the four consecutive quarters include a quarter prior to January 1, 1995, the SO_2 emissions rate for the quarter shall be determined applying the methodology for calculating SO_2 emissions set forth in appendix C of this part. This methodology shall be applied using data submitted for the quarter to the Secretary of Energy on United States Department of Energy Form 767 or, if such data has not been submitted for the quarter, using the dataprepared for such submission for the quarter.

(ii) A description of the actions that will be taken in order for the unit under paragraph (a)(2) of this section to comply with the maximum annual average SO_2 emissions rate under paragraph (c)(5)(iii) of this section.

(iii) A description of any contract for implementing the actions described in paragraph (c)(6)(ii) of this section that was executed before the date on which the agreement under paragraph (c)(5)(iii) of this section is executed. The designated representative shall state the execution date of each such contract and state whether the contract is expressly contingent on the agreement under paragraph (c)(5)(iii) of this section.

(iv) A showing that the actions described under paragraph (c)(6)(ii) of this section will not be implemented during Phase I unless the unit is approved as a substitution unit.

[§72.41(c)(6) added at 59 FR 60238, Nov. 22, 1994]

(7) The special provisions in paragraph (e) of this section.

[§72.41(c)(7) added at 59 FR 60238, Nov. 22, 1994]

(d) *Administrator's Action.*

Copyright 1993-1997, The Bureau of National Affairs, Inc.

(iii) A copy of an agreement that is binding on the owners and operators of the unit under paragraph (a)(2) of this section and the owners and operators of the unit under paragraph (a)(1) of this section, provides each of the following elements, and is supported by documentation meeting the requirements of paragraph (c)(6) of this section:

(A) The owners and operators of the unit under paragraph (a)(2) of this section must not allow the unit to emit sulfur dioxide in excess of a maximum annual average SO_2 emissions rate (in lbs/mmBtu), specified in the agreement, for each year during the period that the substitution plan is in effect.

(B) The maximum annual average SO_2 emissions rate for the unit under paragraph (a)(2) of this section shall not exceed 70 percent of the lesser of: the unit's 1985 actual SO_2 emissions rate; the unit's 1985 allowable SO_2 emissions rate; the greater of the unit's 1989 or 1990 actual SO_2 emissions rate; the most stringent federally enforceable or State enforceable SO_2 emissions limitation, as of November 15, 1990, applicable to the unit in Phase I; or the lesser of the average actual SO_2 emissions rate or the most stringent federally enforceable or State enforceable SO_2 emissions limitation for the unit for four consecutive quarters that immediately precede the 30-day period ending on the date the substitution plan is submitted to the Administrator. If the unit is covered by a non-unit-specific federally enforceable or State enforceable SO_2 emissions limitation in the four consecutive quarters or, as of November 15, 1990, in Phase I, the Administrator will determine, on a case-by-case basis, how to apply the non- unit-specific emissions limitation for purposes of determining whether the maximum annual average SO_2 emissions rate meets the requirement of the prior sentence. If a non-unit-specific federally enforceable SO_2 emissions limitation is not different from a non-unit-specific federally enforceable SO_2 emissions limitation that was effective and applicable to the unit in 1985, the Administrator will apply the non-unit-specific SO_2 emissions limitation by using the 1985 allowable SO_2 emissions rate.

(C) For each year that the actual SO_2 emissions rate of the unit under paragraph (a)(2) of this section exceeds the maximum annual average SO_2 emissions rate, the designated representative of the unit under paragraph (a)(1) of this section must surrender allowances for deduction from the Allowance Tracking System account of the unit under paragraph (a)(1) of this section. The designated representative shall surrender allowances authorizing emissions equal to the baseline of the unit under paragraph (a)(2)of this section multiplied by the difference between the actual SO_2 emissions rate of the unit under paragraph (a)(2) of this section and the maximum annual average SO_2 emissions rate and divided by 2000 lbs/ton. The surrender shall be made by the allowance transfer deadline of the year of the exceedance, and the surrendered allowances shall have the same or an earlier compliance use date as the allowances allocated to the unit under paragraph (a)(2) of this section for that year. The designated representative may identify the serial numbers of the allowances to be deducted. In the absence of such identification, allowances will be deducted on a first-in, first-out basis under §73.35(c)(2) of this chapter.

Copyright 1993-1997, The Bureau of National Affairs, Inc.

(iii) Where, as of November 15, 1990, a non-unit-specific federally enforceable or State enforceable SO_2 emissions limitation covers the unit for any year during 1995-1999, the designated representative shall state each such limitation and propose a method for applying the unit-specific and non-unit-specific emissions limitations under paragraph (d) of this section.

[§72.41(c)(3)(iii) added at 59 FR 60229, Nov. 22, 1994]

(4) Distribution of substitution allowances.

(i) A statement that the allowances in paragraph (c)(3)(ii) of this section are not to be distributed to any units under paragraph (a)(1) of this section that are to be governed by the plan; or

(ii) A list showing any annual distribution of the allowances in paragraph (c)(3)(ii) of this section from a substitution unit to a unit under paragraph (a)(1) of this section that, under the plan, designates the substitution unit.

[§72.41(c)(4)(ii) revised at 59 FR 60229, Nov. 22, 1994]

(5) A demonstration that the substitution plan meets the requirement that each unit under paragraph (a)(2) of this section is under the control of the owner or operator of each unit under paragraph (a)(1) of this section that designates the unit under paragraph (a)(2) of this section as a substitution unit. The demonstration shall be one of the following:

(i) If the unit under paragraph (a)(1) of this section has one or more owners or operators that have an aggregate percentage ownership interest of 50 percent or more in the capacity of the unit under paragraph (a)(2) of this section or the units have a common operator, a statement identifying such owners or operators and their aggregate percentage ownership interest in the capacity of the unit under paragraph (a)(2) of this section or identifying the units' common operator. The designated representative shall submit supporting documentation upon request by the Administrator.

(ii) If the unit under paragraph (a)(1) of this section has one or more owners or operators that have an aggregate percentage ownership interest of at least 10 percent and less than 50 percent in the capacity of the unit under paragraph (a)(2)of this section and the units do not have a common operator, a statement identifying such owners or operators and their aggregate percentage ownership interest in the capacity of the unit under paragraph (a)(2) of this seciton and stating that each such owner or operator has the contractual right to direct the dispatch of the electricity that, because of its ownership interest, it has the right to receive from the unit under paragraph (a)(2) of this section. The fact that the electricity that such owner or operator has the right to receive is centrally dispatched through a power pool will not be the basis for determining that the owner or operator does not have the contractual right to direct the dispatch of such electricity. The designated representative shall submit supporting documentation upon request by the Administrator.

Copyright 1993-1997, The Bureau of National Affairs, Inc.

(i) for each substitution unit:

(A) the unit's baseline.

(B) Each of the following: the unit's 1985 actual SO_2 emissions rate; the unit's 1985 allowable SO_2 emissions rate; the unit's 1989 actual SO_2 emissions rate; the unit's 1990 actual SO_2 emissions rate; and, as of November 15, 1990, the most stringent unit-specific federally enforceable or State enforceable SO_2 emissions limitation covering the unit for 1995-1999. For purposes of determining the most stringent emissions limitation, applicable emissions limitations shall be converted to lbs/mmBtu in accordance with appendix B of this part. Where the most stringent emissions limitation is not the same for every year in 1995-1999, the most stringent emissions limitation shall be stated separately for each year.

[§72.41(c)(3)(i)(B) revised at 59 FR 60229, Nov. 22, 1994]

(C) The lesser of: the unit's 1985 actual SO_2 emissions rate; the unit's 1985 allowable SO_2 emissions rate; the greater of the unit's 1989 or 1990 actual SO_2 emissions rate; or, as of November 15, 1990, the most stringent unit-specific federally enforceable or State enforceable SO_2 emissions limitation covering the unit for 1995-99. Where the most stringent emissions limitation is not the same for every year during 1995-1999, the lesser of the emissions rates shall be determined separately for each year using the most stringent emissions limitation for that year.

[§72.41(c)(3)(i)(C) revised at 59 FR 60229, Nov. 22, 1994]

(D) The product of the baseline in paragraph (c)(3)(i)(A) of this section and the emissions rate in paragraph (c)(3)(i)(C) of this section, divided by 2000 lbs/ton. Where the most stringent emissions limitation is not the same for every year during 1995-1999, the product in the prior sentence shall be calculated separately for each year using the emissions rate determined for that year in paragraph (c)(3)(i)(C) of this section.

[§72.41(c)(3)(i)(D) added at 59 FR 60229, Nov. 22, 1994]

(ii) The sum of the amounts in paragraph (c)(3)(i)(D) of this section for all substitution units to be governed by the plan. Except as provided in paragraph (c)(3)(ii)(B) of this section, this sum is the total number of allowances available each year under the substitution plan.

(B) Where the most stringent unit-specific federally enforceable or State enforceable SO_2 emissions limitation is not the same for every year during 1995-1999, the sum in paragraph (c)(3)(ii)(A) of this section shall be calculated separately for each year using the amounts calculated for that year in paragraph (c)(3)(i)(D) of this section. Each separate sum is the total number of allowances available for the respective year under the substitution plan.

[§72.41(c)(3)(ii) revised at 59 FR 60229, Nov. 22, 1994]

Copyright 1993-1997, The Bureau of National Affairs, Inc.

(1) Any unit listed in Table 1 of §73.10(a) of this chapter; and

(2) Any other existing utility unit that is an affected unit under this part, provided that this section shall not apply to a unit under section 410 of the Act.

(b) (1) The designated representative may include, in the Acid Rain permit application for a unit under paragraph (a)(1) of this section, a substitution plan under which one or more units under paragraph (a)(2) of this section are designated as substitution units, provided that:

(i) Each unit under paragraph (a)(2) of this section is under the control of the owner or operator of each unit under paragraph (a)(1) of this section that designates the unit under paragraph (a)(2) of this section as a substitution unit; and

[§72.41(b)(1)(i) amended at 59 FR 60229, Nov. 22, 1994]

(ii) In accordance with paragraph (c)(3) of this section, the emissions reductions achieved under the plan shall be the same or greater than would have been achieved by all units governed by the plan without such plan.

(2) The designated representative of each source with a unit designated as a substitution unit in any plan submitted under paragraph (b)(1) of this section shall incorporate in the permit application each such plan.

(3) The designated representative may submit a substitution plan not later than 90 days, or a notification to activate a conditionally approved plan in accordance with §72.40(c) not later than 60 days, before the allowance transfer deadline applicable to the first year for which the plan is to take effect.

(c) *Contents of a Substitution Plan.* A complete substitution plan shall include the following elements in a format prescribed by the Administrator:

(1) Identification of each unit under paragraph (a)(1) of this section and each substitution unit to be governed by the substitution plan. A unit shall not be a substitution unit in more than one substitution plan.

(2) Except where the designated representative requests conditional approval of the plan, the first calendar year and, if known, the last calendar year in which the substitution plan is to be in effect. Unless the designated representative specifies an earlier calendar year, the last calendar year will be deemed to be 1999.

(3) Demonstration that the total emissions reductions achieved under the substitution plan will be equal to or greater than the total emissions reductions that would have been achieved without the plan, as follows:

[§72.41(c)(3) introductory text amended at 59 FR 60229, Nov. 22, 1994]

Copyright 1993-1997, The Bureau of National Affairs, Inc.

compliance option will actually be pursued beginning January 1 of a specified year. If the conditionally approved compliance option includes a plan described in paragraph (b)(1) of this section, the designated representative of each source governed by the plan shall sign and certify the notification. Such notification shall be subject to the limitations on activation under subpart D of this part and regulations implementing section 407 of the Act.

(2) The notification under paragraph (c)(1) of this section shall specify the first calendar year and the last calendar year for which the conditionally approved Acid Rain compliance option is to be activated. A conditionally approved compliance option shall be activated, if at all, before the date of any enforceable milestone applicable to the compliance option. The date of activation of the compliance option shall not be a defense against failure to meet the requirements applicable to that compliance option during each calendar year for which the compliance option is activated.

(3) Upon submission of a notification meeting the requirements of paragraphs (c) (1) and (2) of this section, the conditionally-approved Acid Rain compliance option becomes binding on the owners and operators and the designated representative of any unit governed by the conditionally-approved compliance option.

(4) A notification meeting the requirements of paragraphs (c) (1) and (2) of this section will revise the unit's permit in accordance with §72.83 (administrative permit amendment).

(d) *Termination of Compliance Option.*

(1) The designated representative for a unit may terminate an Acid Rain compliance option by notifying the permitting authority in writing that an approved compliance option will be terminated beginning January 1 of a specified year. If the compliance option includes a plan described in paragraph (b)(1) of this section, the designated representative for each source governed by the plan shall sign and certify the notification. Such notification shall be subject to the limitations on termination under subpart D of this part and regulations implementing section 407 of the Act.

(2) The notification under paragraph (d)(1) of this section shall specify the calendar year for which the termination will take effect.

(3) Upon submission of a notification meeting the requirements of paragraphs (d) (1) and (2) of this section, the termination becomes binding on the owners and operators and the designated representative of any unit governed by the Acid Rain compliance option to be terminated.

(4) A notification meeting the requirements of paragraphs (d) (1) and (2) of this section will revise the unit's permit in accordance with §72.83 (administrative permit amendment).

40 CFR 72.41 Phase I substitution plans.

(a) *Applicability.* This section shall apply during Phase I to the designated representative of:

Copyright 1993-1997, The Bureau of National Affairs, Inc.

Subpart D—Acid Rain Compliance Plan and Compliance Options

40 CFR 72.40 General.

(a) For each affected unit included in an Acid Rain permit application , a complete compliance plan shall:

(1) For sulfur dioxide emissions, certify that, as of the allowance transfer deadline, the designated representative will hold allowances in the unit's compliance subaccount (after deductions under §73.34(c) of this chapter) not less than the total annual emissions of sulfur dioxide from the unit. The compliance plan may also specify, in accordance with this subpart, one or more of the Acid Rain compliance options.

(2) For nitrogen oxides emissions, certify that the unit will comply with the applicable limitation established by regulations implementing section 407 of the Act or shall specify one or more Acid Rain compliance options, in accordance with section 407 of the Act and regulations implementing section 407 .

(b) *Multi-unit compliance options.*

(1) A plan for a compliance option, under §72.41 , 72.42 , 72.43 , or 72.44 , of this part, under §74.47 of this chapter, or an NO_X averaging plan contained in part 76 of this chapter, that includes units at more than one affected source shall be complete only if:

[§72.40(b)(1) introductory text amended at 60 FR 17111, April 4, 1994]

(i) Such plan is signed and certified by the designated representative for each source with an affected unit governed by such plan; and

(ii) A complete permit application is submitted covering each unit governed by such plan.

(2) A permitting authority's approval of a plan under paragraph (b)(1) of this section that includes units in more than one State shall be final only after every permitting authority with jurisdiction over any such unit has approved the plan with the same modifications or conditions, if any.

(c) *Conditional Approval.* In the compliance plan, the designated representative of an affected unit may propose, in accordance with this subpart, any Acid Rain compliance option for conditional approval, except a Phase I extension plan; *provided* that an Acid Rain compliance option under section 407 of the Act may be conditionally proposed only to the extent provided in regulations implementing section 407 of the Act.

(1) To activate a conditionally-approved Acid Rain compliance option, the designated representative shall notify the permitting authority in writing that the conditionally-approved

Copyright 1993-1997, The Bureau of National Affairs, Inc.

report that the requirements concerning calculation of actual utilization under paragraph (f)(1)(ii) and any requirements established under paragraph (f)(3) of this section are met.

(iii) Except as provided in paragraph (f)(5) of this section, the designated representative shall surrender for deduction the number of allowances calculated using the formula in §72.92(c) and treating, as a separate Phase I unit, each portion of unit for which a petition is approved under paragraph (f)(3) of this section and the remaining portion of the unit.

(5) In the event that the designated representatives fail to make all the proper attributions, apportionments, calculations, and demonstrations under paragraph (f)(4) of this section and §§72.91 and 72.92 , the Administrator may require that:

(i) All portions of the unit be treated as part of the dispatch system of the unit in accordance with paragraph (e)(1) of this paragraph and any identification of dispatch system submitted under paragraph (b) or (d) of this section;

(ii) The designated representatives make all submissions under §§72.91 and 72.92 (including the dispatch system data report), treating the entire unit as a single Phase I unit, in accordance with paragraph (e)(1) of this paragraph and any identification of dispatch system submitted under paragraph (b) or (d) of this section; and

(iii) The designated representative surrender for deduction the number of allowances calculated, consistent with the reports under paragraph (f)(5)(ii) of this section and §§72.91 and 72.92 , using the formula in §72.92(c) and treating the entire unit as a single Phase I unit.

(6) The designated representative may submit a notification to terminate an approved petition by January 30 of the first year for which the termination is to take effect. The notification must be signed and certified by the designated representatives of all units included in all dispatch systems that include any portion of the unit apportioned under the petition. Upon receipt of the notification meeting the requirements of the prior two sentences by the Administrator, the approved petition is no longer in effect for that year and the remaining years in Phase I and the designated representatives shall make all submissions under §§72.91 and 72.92 treating the petition as no longer in effect for all such years.

(7) Except as expressly provided in paragraphs (f)(1) through (6) of this section or the Administrator's approval of the petition, all provisions of the Acid Rain Program applicable to an affected source or an affected unit shall apply to the entire unit regardless of whether a petition has been submitted or approved, or reports have been submitted, under such paragraphs. Approval of a petition under such paragraphs shall not constitute a determination of the percentage ownership in a unit under any other provision of the Acid Rain Program and shall not change the liability of the owners and operators of an affected unit that has excess emissions under §72.9(e).

[§72.33(f) revised at 60 FR 18468, April 11, 1995]

Copyright 1993-1997, The Bureau of National Affairs, Inc.

(v) The following statement, signed by the designated representatives of all units in all dispatch systems that will include any portion of the unit if the petition is approved: "During the period that this petition, if approved, is in effect, all information that concerns the units and generators in any dispatch system including any portion of the unit apportioned under the petition and that is contained in any submissions under 40 CFR 72.91 and 72.92 by me and the other designated representatives of these units shall be consistent and shall conform to the data in the dispatch system data reports under 40 CFR 72.92(b). I am aware of, and will comply with, the requirements imposed under 40 CFR 72.33(f) (4) and (5)."

(3) (i) The Administrator will approve in whole, in part, or with changes or conditions, or deny the petition under paragraph (f)(1) of this section within 90 days of receipt of the petition. The Administrator will treat the petition, as changed or conditioned upon approval, as amending any identification of dispatch system that is submitted prior to the approval and includes any portion of the unit for which the petition is approved. Where any portion of a unit is not covered by an approved petition, that remaining portion of the unit shall continue to be part of the unit's dispatch system.

(ii) In approving the petition, the Administrator will determine, on a case-by- case basis, the proper calculation and treatment, for purposes of the reports required under §§72.91 and 72.92 , of plan reductions and compensating generation provided to other units.

(4) The designated representative for the unit for which a petition is approved under paragraph (f)(3) of this section and the designated representatives of all other units included in all dispatch systems that include any portion of the unit shall submit all annual compliance certification reports, dispatch system data reports, and other reports required under §§72.91 and 72.92 treating, as a separate Phase I unit, each portion of the unit for which a petition is approved under paragraph (f)(3)of this section and the remaining portion of the unit. The reports shall include all required calculations and demonstrations, treating each such portion of the unit as a separate Phase I unit. Upon request, the designated representatives shall demonstrate that the data in all the reports under §§72.91 and 72.92 has been properly attributed or apportioned among the portions of the unit and the dispatch systems and that there is no undercounting or double-counting with regard to such data.

(i) The baseline of each portion of the unit for which a petition is approved shall be determined under paragraphs (f)(1) (i) and (ii) of this section. The baseline of the remaining portion of such unit shall equal the baseline of the unit less the sum of the baselines of any portions of the unit for which a petition is approved.

(ii) The actual utilization of each portion of the unit for which a petition is approved shall be determined under paragraphs (f)(1) (i) and (ii) of this section. The actual utilization of the remaining portion of such unit shall equal the actual utilization of the unit less the sum of the actual utilizations of any portions of the unit for which a petition is approved. Upon request, the designated representative of the unit shall demonstrate in the annual compliance certification

Copyright 1993-1997, The Bureau of National Affairs, Inc.

the actual utilization of the unit for the year that is attributed to the owner.

(ii) The annual or actual utilization of a unit shall be attributed, under paragraph (f)(1)(i) of this section, to an owner of the unit using accounting procedures consistent with those used to determine the owner's share of the fuel costs in the operation of the unit during the period for which the annual or actual utilization is being attributed.

(iii) Upon submission of the petition, the designated representative may not change the election of the apportionment method or the baseline of the owner's portion of the unit.
The same apportionment method must be used for all portions of the unit for all years in Phase I for which any petition under paragraph (f)(1) of this section is approved and in effect.

(2) The petition under paragraph (f)(1) of this section shall be submitted by January 30 of the first year for which the dispatch system proposed in the petition will take effect, if approved. A complete petition shall include the following elements in a format prescribed by the Administrator:

(i) The election of the apportionment method under paragraph (f)(1)(i) of this section.

(ii) The baseline of the owner's portion of the unit and the baseline of any other owner's portion of the unit for which a petition under paragraph (f)(1) of this section has been approved or has been submitted (and not disapproved) and a demonstration that the sum of such baselines and the baseline of any remaining portion of the unit equals 100 percent of the baseline of the unit. The designated representative shall also submit, upon request, either:

(A) Where the unit is to be apportioned under paragraph (f)(1)(i)(A) of this section, documentation of the average of the owner's percentage ownership of the capacity of the unit for each year during 1985-1987; or

(B) Where the unit is to be apportioned under paragraph (f)(1)(i)(B) of this section, documentation showing the attribution of the unit's utilization in 1985, 1986, and 1987 among the portions of the unit and the calculation of the annual average utilization for 1985-1987 for the portions of the unit.

(iii) The name of the proposed dispatch system and a list of all units (including portions of units) and generators in that proposed dispatch system and, upon request, documentation demonstrating that the owner's portion of the unit, along with the other units in the proposed dispatch system, are a group of all units and generators that are interconnected and centrally dispatched by a single utility company, the service company of a single holding company, or a single power pool.

(iv) The following statement, signed by the designated representatives of all units in the proposed dispatch system: "I certify that the units and generators in the dispatch system proposed in this petition are and will continue to be interconnected and centrally dispatched, and will be treated as a dispatch system under 40 CFR 72.91 and 72.92 , during the period that this petition, as approved, is in effect."

Copyright 1993-1997, The Bureau of National Affairs, Inc.

these units shall be consistent and shall conform with the data in the dispatch system data reports under 40 CFR 72.92(b). I am aware of, and will comply with, the requirements imposed under 40 CFR 72.33(e)(2)."

[§72.33(c)(4) amended at 60 FR 18468, April 11, 1995]

(5) The signatures of the designated representative for each affected unit in the dispatch system.

(d) In order to change a unit's current dispatch system, complete identifications of dispatch system shall be submitted for the unit's current dispatch system and the unit's new dispatch system, reflecting the change.

(e) (1) Any unit or generator not listed in a complete identification of dispatch system that is in effect shall treat its utility system as its dispatch system and, if such unit or generator is listed in the NADB, shall treat the utility system reported under the data field "UTILNAME" of the NADB as its utility system.

(2) During the period that the identification of dispatch system is in effect all information that concerns the units and generators in a given dispatch system and that is contained in any submissions under §§72.91 and 72.92 by designated representative of these units shall be consistent and shall conform with the data in the dispatch system data reports under §72.92(b). If this requirement is not met, the Administrator may reject all such submissions and require the designated representatives to make the submissions under §§72.91 and 72.92 (including the dispatch system data report) treating the utility system of each unit or generator as its respective dispatch system and treating the identification of dispatch system as no longer in effect.

[§72.33(e) amended at 60 FR 18468, April 11, 1995]

(f) (1) Notwithstanding paragraph (e)(1) of this section or any submission of an identification of dispatch system under paragraphs (b) or (d) of this section, the designated representative of a Phase I unit with two or more owners may petition the Administrator to treat, as the dispatch system for an owner's portion of the unit, the dispatch system of another unit.

(i) The owner's portion of the unit shall be based on one of the following apportionment methods:

(A) *Owner's share of the unit's capacity in 1985-1987.* Under this method, the baseline of the owner's portion of the unit shall equal the baseline of the unit multiplied by the average of the owner's percentage ownership of the capacity of the unit for each year during 1985-1987. The actual utilization of the owner's portion of the unit for a year in Phase I shall equal the actual utilization of the unit for the year that is attributed to the owner.

(B) *Owner's share of the unit's baseline.* Under this method, the baseline of the owner's portion of the unit shall equal the average of the unit's annual utilization in 1985-1987 that is attributed to the owner. The actual utilization of the owner's portion of the unit for a year in Phase I shall equal

Copyright 1993-1997, The Bureau of National Affairs, Inc.

operating in compliance with the Acid Rain Program.

(c) A complete Acid Rain permit application shall be binding on the owners and operators and the designated representative of the affected source and the affected units covered by the permit application and shall be enforceable as an Acid Rain permit from the date of submission of the permit application until the issuance or denial of an Acid Rain permit covering the units and subject to administrative appeal, where the Administrator is the permitting authority, or the issuance or denial of such permit as a final agency action subject to judicial review, where the State is the permitting authority.

40 CFR 72.33 Identification of dispatch system.

(a) Every Phase I unit shall be treated as part of a dispatch system for purposes of §§72.91 and 72.92 in accordance with this section.

[§72.33(a) amended at 60 FR 18468, April 11, 1995]

(b) (1) The designated representatives of all affected units in a group of all units and generators that are interconnected and centrally dispatched and that are included in the same utility system, holding company, or power pool, may jointly submit to the Administrator a complete identification of dispatch system.

[§72.33(b)(2) and (3) amended at 60 FR 18468, April 11, 1995]

(2) Except as provided in paragraph (f) of this section, each unit or generator may be included in only one dispatch system.

(3) Any identification of dispatch system must be submitted by January 30 of the first year for which the identification is to be in effect.

(c) A complete identification of dispatch system shall include the following elements in a format prescribed by the Administrator:

(1) The name of the dispatch system .

(2) The list of all units and generators (including sulfur-free generators) in the dispatch system.

[§72.33(c)(2) amended at 60 FR 18468, April 11, 1995]

(3) The first calendar year for which the identification is to be in effect.

(4) The following statement: "I certify that, except as otherwise required under a petition as approved under 40 CFR 72.33(f), the units and generators listed herein are and will continue to be interconnected and centrally dispatched, and will be treated as a dispatch system under 40 CFR 72.91 and 72.92 , during the period that this identification of dispatch system is in effect. During such period, all information concerning these units and generators and contained in any submissions under 40 CFR 72.91 and 72.92 by me and the other designated representatives of

Copyright 1993-1997, The Bureau of National Affairs, Inc.

existing Acid Rain permit governing the unit during Phase II or an opt-in permit governing an opt-in source or such longer time as may be approved under part 70 of this chapter that ensures that the term of the existing permit will not expire before the effective date of the permit for which the application is submitted.

[§72.30(c) amended at 60 FR 17111, April 4, 1995]

(d) The original and three copies of all permit applications for Phase I and where the Administrator is the permitting authority, for Phase II, shall be submitted to the EPA Regional Office for the Region where the affected source is located. The original and three copies of all permit applications for Phase II, where the Administrator is not the permitting authority, shall be submitted to the State permitting authority for the State where the affected source is located.

40 CFR 72.31 Information requirements for Acid Rain permit applications.

A complete Acid Rain permit application shall include following elements in a format prescribed by the Administrator:

(a) Identification of the affected source for which the permit application is submitted;

(b) Identification of each Phase I unit at the source for which the permit application is submitted for Phase I or each Phase II unit at the source for which the permit application is submitted for Phase II;

(c) A complete compliance plan for each unit, in accordance with subpart D of this part;

(d) The standard requirements under §72.9; and

(e) If the Acid Rain permit application is for Phase II and the unit is a new unit, the date that the unit has commenced or will commence operation and the deadline for monitor certification.

40 CFR 72.32 Permit application shield and binding effect of permit application.

(a) Once a designated representative submits a timely and complete Acid Rain permit application, the owners and operators of the affected source and the affected units covered by the permit application shall be deemed in compliance with the requirement to have an Acid Rain permit under §72.9(a)(2) and §72.30(a); *provided* that any delay in issuing an Acid Rain permit is not caused by the failure of the designated representative to submit in a complete and timely fashion supplemental information, as required by the permitting authority, necessary to issue a permit.

(b) Prior to the earlier of the date on which an Acid Rain permit is issued subject to administrative appeal under part 78 of this chapter or is issued as a final agency action subject to judicial review, an affected unit governed by and operated in accordance with the terms and requirements of a timely and complete Acid Rain permit application shall be deemed to be

Copyright 1993-1997, The Bureau of National Affairs, Inc.

24 months before the later of January 1,2000 or the date on which the unit begins to serve a generator with a nameplate capacity greater than 25 MWe.

(iv) For any source with a unit under §72.6(a)(3)(iii), the designated representative shall submit a complete Acid Rain permit application governing such unit to the permitting authority at least 24 months before the later of January 1, 2000 or the date on which the auxiliary firing commences operation.

[§72.30(b)(2)(iv) added at 58 FR 15647, March 23, 1993]

(v) For any source with a unit under §72.6(a)(3)(iv), the designated representative shall submit a complete Acid Rain permit application governing such unit to the permitting authority before the later of January 1, 1998 or March 1 of the year following the three calendar year period in which the unit sold to a utility power distribution system an annual average of more than one-third of its potential electrical output capacity and more than 219,000 MWe-hrs actual electric output (on a gross basis).

[§72.30(b)(2)(v) added at 58 FR 15647, March 23, 1993]

(vi) For any source with a unit under §72.6(a)(3)(v), the designated representative shall submit a complete Acid Rain permit application governing such unit to the permitting authority before the later of January 1, 1998 or March 1 of the year following the calendar year in which the facility fails to meet the definition of qualifying facility.

[§72.30(b)(2)(vi) added at 58 FR 15647, March 23, 1993]

(vii) For any source with a unit under §72.6(a)(3)(vi), the designated representative shall submit a complete Acid Rain permit application governing such unit to the permitting authority before the later of January 1, 1998 or March 1 of the year following the calendar year in which the facility fails to meet the definition of an independent power production facility.

[§72.30(b)(2)(vii) added at 58 FR 15647, March 23, 1993]

(viii) For any source with a unit under §72.6(a)(3)(vii), the designated representative shall submit a complete Acid Rain permit application governing such unit to the permitting authority before the later of January 1, 1998 or March 1 of the year following the three calendar year period in which the incinerator consumed 20 percent or more fossil fuel (on a Btu basis).

[§72.30(b)(2)(viii) added at 58 FR 15647, March 23, 1993]

(3) *Acid Rain Compliance Option Deadlines.* The deadlines for applying for approval of any Acid Rain compliance options shall be the deadlines specified in the relevant section of subpart Dof this part and in section 407 of the Act and regulations implementing section 407 of the Act.

(c) *Duty to reapply.* The designated representative shall submit a complete Acid Rain permit application for each source with an affected unit at least 6 months prior to the expiration of an

Copyright 1993-1997, The Bureau of National Affairs, Inc.

the effect of any action or inaction under the Acid Rain Program.

(c) Neither the Administrator nor any permitting authority will adjudicate any private legal dispute concerning the authorization or any submission, action, or inaction of any designated representative, including private legal disputes concerning the proceeds of allowance transfers.

Subpart C—Acid Rain Permit Application

40 CFR 72.30 Requirements to apply.

(a) *Duty to apply.* The designated representative of any source with an affected unit shall submit a complete Acid Rain permit application by the applicable deadline in paragraphs (b) and (c) of this section, and the owners and operators of such source and any affected unit at the source shall not operate the source or unit without a permit that states its Acid Rain program requirements.

(b) *Deadlines.*

(1) *Phase I.*

(i) The designated representative shall submit a complete Acid Rain permit application governing an affected unit during Phase I to the Administrator on or before February 15, 1993 for:

(A) Any source with such a unit under §72.6(a)(1); and

(B) Any source with such a unit under §72.6(a) (2) or (3) that is designated a substitution or compensating unit in a substitution plan or reduced utilization plan submitted to the Administrator for approval or conditional approval.

(ii) Notwithstanding paragraph (b)(1)(i) of this section, if a unit at a source not previously permitted is designated a substitution or compensating unit in a submission requesting revision of an existing Acid Rain permit, the designated representative of the unit shall submit a complete Acid Rain permit application on the date that the submission requesting the revision is made.

(2) *Phase II.* For any source with an existing unit under §72.6(a)(2) the designated representative shall submit a complete Acid Rain permit application governing such unit during Phase II to the permitting authority on or before January 1, 1996.

(ii) For any source with a new unit under §72.6(a)(3)(i), the designated representative shall submit a complete Acid Rain permit application governing such unit to the permitting authority at least 24 months before the later of January 1, 2000 or the date on which the unit commences operation.

(iii) For any source with a unit under §72.6(a)(3)(ii), the designated representative shall submit a complete Acid Rain permit application governing such unit to the permitting authority at least

Copyright 1993-1997, The Bureau of National Affairs, Inc.

(8) The following statement: "I certify that the owners and operators of the affected source and of each affected unit at the source shall be bound by any order issued to me by the Administrator, the permitting authority, or a court regarding the source or unit."

(9) The following statement: "Where there are multiple holders of a legal or equitable title to, or a leasehold interest in, an affected unit, or where a utility or industrial customer purchases power from an affected unit under life-of-the-unit, firm power contractual arrangements, I certify that:

(i) "I have given a written notice of my selection as the "designated representative' or "alternate designated representative', as applicable, and of the agreement by which I was selected to each owner and operator of the affected source and of each affected unit at the source; and

(ii) "Allowances and proceeds of transactions involving allowances will be deemed to be held or distributed in proportion to each holder's legal, equitable, leasehold, or contractual reservation or entitlement or, if such multiple holders have expressly provided for a different distribution of allowances by contract, that allowances and the proceeds of transactions involving allowances will be deemed to be held or distributed in accordance with the contract."

(10) If there is an alternate designated representative, the following statement: "The agreement by which I was selected as the alternate designated representative includes a procedure for the owners and operators of the source and affected units at the source to authorize the alternate designated representative to act in lieu of the designated representative."

(11) The signature of the designated representative and any alternate designated representative and the date signed.

(b) Unless otherwise required by the Administrator or the permitting authority, documents of agreement or notice referred to in the certificate of representation shall not be submitted to the Administrator or the permitting authority. Neither the Administrator nor the permitting authority shall be under any obligation to review or evaluate the sufficiency of such documents, if submitted.

40 CFR 72.25 Objections.

(a) Once a complete certificate of representation has been submitted in accordance with §72.24 , the Administrator will rely on the certificate of representation unless and until a superseding complete certificate is submitted to the Administrator.

(b) Except as provided in §72.23 , no objection or other communication submitted to the Administrator or the permitting authority concerning the authorization, or any submission, action or inaction, of the designated representative shall affect any submission, action, or inaction of the designated representative, or the finality of any decision by the Administrator or permitting authority, under the Acid Rain Program. In the event of such communication, the Administrator and the permitting authority are not required to stay any allowance transfer, any submission, or

Copyright 1993-1997, The Bureau of National Affairs, Inc.

included in the list of owners and operators submitted in the certificate of representation, such new owner or operator shall be deemed to be subject to and bound by the certificate of representation, the submissions, actions, and inactions of the designated representative and any alternative designated representative of the source or unit, and the decisions, actions, and inactions of the Administrator and permitting authority, as if the new owner or operator were included in such list.

(2) Within 30 days following any change in the owners and operators of an affected unit, including the addition of a new owner or operator, the designated representative or any alternative designated representative shall submit a revision to the certificate of representation amending the list of owners and operators to include the change.

40 CFR 72.24 Certificate of representation.

(a) A complete certificate of representation for a designated representative or an alternate designated representative shall include the following elements in a format prescribed by the Administrator:

(1) Identification of the affected source and each affected unit at the source for which the certificate of representation is submitted.

(2) The name, address, and telephone and facsimile numbers of the designated representative and any alternate designated representative.

(3) A list of the owners and operators of the affected source and of each affected unit at the source and all State or local utility regulatory authorities with jurisdiction over each owner.

(4) The following statement: "I certify that I was selected as the "designated representative' or "alternate designated representative,' as applicable, by an agreement binding on the owners and operators of the affected source and each affected unit at the source."

(5) The following statement: "I certify that I have given notice of the agreement, selecting me as the "designated representative' or "alternate designated representative,' as applicable for the affected source and each affected unit at the source identified in this certificate of representation, daily for a period of one week in a newspaper of general circulation in the area where the source is located or in a State publication designed to give general public notice."

(6) The following statement: "I certify that I have all necessary authority to carry out my duties and responsibilities under the Acid Rain Program on behalf of the owners and operators of the affected source and of each affected unit at the source and that each such owner and operator shall be fully bound by my actions, inactions, or submissions."

(7) The following statement: "I certify that I shall abide by any fiduciary responsibilities imposed by the agreement by which I was selected as "designated representative' or "alternate designated representative', as applicable."

Copyright 1993-1997, The Bureau of National Affairs, Inc.

[§72.21(e) revised at 60 FR 17111, April 4, 1995]

40 CFR 72.22 Alternate designated representative.

(a) The certificate of representation may designate one and only one alternate designated representative, who may act on behalf of the designated representative. The agreement by which the alternate designated representative is selected shall include a procedure for the owners and operators of the source and affected units at the source to authorize the alternate designated representative to act in lieu of the designated representative.

(b) Upon receipt by the Administrator of a complete certificate of representation that meets the requirements of §72.24 (including those applicable to the alternate designated representative), any action, representation, or failure to act by the alternate designated representative shall be deemed to be an action, representation, or failure to act by the designated representative.

(c) In the event of a conflict, any action taken by the designated representative shall take precedence over any action taken by the alternate designated representative if, in the Administrator's judgement, the actions are concurrent and conflicting.

(d) Except in this section, §72.23 , and §72.24 , whenever the term "designated representative" is used under the Acid Rain Program, the term shall be construed to include the alternate designated representative.

40 CFR 72.23 Changing the designated representative, alternate designated representative; changes in the owners and operators.

(a) *Changing the designated representative.* The designated representative may be changed at any time upon receipt by the Administrator of a superseding complete certificate of representation. Notwithstanding any such change, all submissions, actions, and inactions by the previous designated representative prior to the time and date when the Administrator receives the superseding certificate of representation shall be binding on the new designated representative and on the owners and operators of the source represented and the affected units at the source.

(b) *Changing the alternate designated representative.* The alternate designated representative may be changed at any time upon receipt by the Administrator of a superseding complete certificate of representation. Notwithstanding any such change, all submissions, actions, and inactions by the previous alternate designated representative prior to the time and date when the Administrator receives the superseding certificate of representation shall be binding on the new alternate designated representative and on the owners and operators of the source represented and the affected units at the source.

(c) *Changes in the owners and operators.*

(1) In the event a new owner or operator of an affected source or an affected unit is not

Copyright 1993-1997, The Bureau of National Affairs, Inc.

(a) Each submission under the Acid Rain Program shall be submitted, signed, and certified by the designated representative for all sources on behalf of which the submission is made.

(b) In each submission under the Acid Rain Program, the designated representative shall certify, by his or her signature:

(1) The following statement, which shall be included verbatim in such submission: "I am authorized to make this submission on behalf of the owners and operators of the affected source or affected units for which the submission is made."

(2) The following statement, which shall be included verbatim in such submission: "I certify under penalty of law that I have personally examined, and am familiar with, the statements and information submitted in this document and all its attachments. Based on my inquiry of those individuals with primary responsibility for obtaining the information, I certify that the statements and information are to the best of my knowledge and belief true, accurate, and complete. I am aware that there are significant penalties for submitting false statements and information or omitting required statements and information, including the possibility of fine or imprisonment."

(c) The Administrator and the permitting authority shall accept or act on a submission made on behalf of owners or operators of an affected source and an affected unit only if the submission has been made, signed, and certified in accordance with paragraphs (a) and (b) of this section.

(d) (1))The designated representative of a source shall serve notice on each owner and operator of the source and of an affected unit at the source:

(i) By the date of submission, of any Acid Rain Program submissions by the designated representative and

(ii) Within 10 business days of receipt of a determination, of any written determination by the Administrator or the permitting authority,

(iii) Provided that the submission or determination covers the source or the unit.

(2) The designated representative of a source shall provide each owner and operator of an affected unit at the source a copy of any submission or determination under paragraph (d)(1) of this section, unless the owner or operator expressly waives the right to receive such a copy.

(e) The provisions of this section shall apply to a submission made under parts 73, 74, 75 , 76, 77, and 78 of this chapter only if it is made or signed or required to be made or signed, in accordance with parts 73, 74, 75, 76, 77, and 78 of this chapter, by:

(1) The designated representative; or

(2) The authorized account representative or alternate authorized account representative of a unit account.

Copyright 1993-1997, The Bureau of National Affairs, Inc.

(7) ASTM D2622-92, Standard Test Method for Sulfur in Petroleum Products by X-Ray Spectrometry, for §72.7 of this chapter.

(8) ASTM D2880-90a, Standard Specification for Gas Turbine Fuel Oils, for §72.2 of this part.

[New §72.13(a)(8) added at 60 FR 26513, May 17, 1995]

(9) ASTM D4057-88, Standard Practice for Manual Sampling of Petroleum and Petroleum Products, for §72.7 of this part.

[Former §72.13(a)(8) amended and redesignated as new (9) at 60 FR 26513, May 17, 1995]

(10) ASTM D4294-90, Standard Test Method for Sulfur in Petroleum Products by Energy-Dispersive X-Ray Fluorescence Spectroscopy, for §72.7 of this part.

[Former §72.13(a)(9) amended and redesignated as new (10) at 60 FR 26513, May 17, 1995]

Subpart B—Designated Representative

40 CFR 72.20 Authorization and responsibilities of the designated representative.

(a) Except as provided under §72.22 , each affected source, including all affected units at the source, shall have one and only one designated representative, with regard to all matters under the Acid Rain Program concerning the source or any affected unit at the source.

(b) Upon receipt by the Administrator of a complete certificate of representation, the designated representative of the source shall represent and, by his or her actions, inactions, or submissions, legally bind each owner and operator of the affected source represented and each affected unit at the source in all matters pertaining to the Acid Rain Program, not withstanding any agreement between the designated representative and such owners and operators. The owners and operators shall be bound by any order issued to the designated representative by the Administrator, the permitting authority, or a court.

(c) The designated representative shall be selected and act in accordance with the certifications set forth in §72.24(a) (4) , (5), (7), and (9).

(d) No Acid Rain permit shall be issued to an affected source, nor shall any allowance transfer be recorded for an Allowance Tracking System account of an affected unit at a source, until the Administrator has received a complete certificate of representation for the designated representative of the source and the affected units at the source.

40 CFR 72.21 Submissions.

Copyright 1993-1997, The Bureau of National Affairs, Inc.

on the occurrence of an act or event shall begin on the day the act or event occurs.

(b) Unless otherwise stated, any time period scheduled, under the Acid Rain Program, to begin before the occurrence of an act or event shall be computed so that the period ends on the day before the act or event occurs.

(c) Unless otherwise stated, if the final day of any time period, under the Acid Rain Program, falls on a weekend or a federal holiday, the time period shall be extended to the next business day.

(d) Whenever a party or interested person has the right, or is required, to act under the Acid Rain Program within a prescribed time period after service of notice or other document upon him or her by mail, 3 days shall be added to the prescribed time.

40 CFR 72.12 Administrative Appeals.

The procedures for appeals of decisions of the Administrator under this part are contained in part 78 of this chapter.

40 CFR 72.13 Incorporation by reference.

The materials listed in this section are incorporated by reference in the corresponding sections noted. These incorporations by reference were approved by the Director of the Federal Register in accordance with 5 U.S.C. 552(a) and 1 CFR part 51. These materials are incorporated as they existed on the date of approval, and a notice of any change in these materials will be published in the **Federal Register.** The materials are available for purchase at the corresponding address noted below and are available for inspection at the Office of the Federal Register, 800 N. Capitol Street, NW., Washington, DC, at the Public Information Reference Unit of the U.S. EPA, 401 M Street SW, Washington, DC and at the Library (MD-35), U.S. EPA, Research Triangle Park, North Carolina.

(a) The following materials are available for purchase from the following addresses: American Society for Testing and Material (ASTM), 1916 Race Street, Philadelphia, Pennsylvania 19103; and the University Microfilms International 300 North Zeeb Road, Ann Arbor, Michigan 48106.

(1) ASTM D129-91, Standard Test Method for Sulfur in Petroleum Products (General Bomb Method), for §72.7 of this chapter.

(2) ASTM D388-92, Standard Classification of Coals by Rank for §72.2 of this chapter.

(3) ASTM D396-90a, Standard Specification for Fuel Oils, for §72.2 of this chapter.

(4) ASTM D975-91, Standard Specification for Diesel Fuel Oils, for §72.2 of this chapter.

(5) ASTMD1072-90, Standard Test Method for Total Sulfur in Fuel Gases, for §72.7 of this chapter.

(6) ASTMD1265-92, Standard Practice for Sampling Liquified Petroleum (LP) Gases (Manual Method), for §72.7 of this chapter.

Copyright 1993-1997, The Bureau of National Affairs, Inc.

owners and operators of such unit. Except as provided under §72.41 (substitution plans), §72.42 (Phase I extension plans), §72.43 (reduced utilization plans), §72.44 (Phase II repowering extension plans), §74.47 of this chapter (thermal energy plans), and part 76 of this chapter (NO_X averaging plans), and except with regard to the requirements applicable to units with a common stack under part 75 of this chapter (including §§75.16 , 75.17 and 75.18 of this chapter), the owners and operators and the designated representative of one affected unit shall not be liable for any violation by any other affected unit of which they are not owners or operators or the designated representative and that is located at a source of which they are not owners or operators or the designated representative.

(7) Each violation of a provision of this part, parts 73, 74 , 75, 76, 77, and 78 of this chapter, by an affected source or affected unit, or by an owner or operator or designated representative of such source or unit, shall be a separate violation of the Act.

(h) *Effect on Other Authorities.* No provision of the Acid Rain Program, an Acid Rain permit application, an Acid Rain permit, or a written exemption under §§72.7 or 72.8 shall be construed as:

(1) Except as expressly provided in title IV of the Act, exempting or excluding the owners and operators and, to the extent applicable, the designated representative of an affected source or affected unit from compliance with any other provision of the Act, including the provisions of title I of the Act relating to applicable National Ambient Air Quality Standards or State Implementation Plans.

(2) Limiting the number of allowances a unit can hold; *provided,* that the number of allowances held by the unit shall not affect the source's obligation to comply with any other provisions of the Act.

(3) Requiring a change of any kind in any State law regulating electric utility rates and charges, affecting any State law regarding such State regulation, or limiting such State regulation, including any prudence review requirements under such State law.

(4) Modifying the Federal Power Act or affecting the authority of the Federal Energy Regulatory Commission under the Federal Power Act.

(5) Interfering with or impairing any program for competitive bidding for power supply in a State in which such program is established.

40 CFR 72.10 Availability of information.

The availability to the public of information provided to, or otherwise obtained by, the Administrator under the Acid Rain Program shall be governed by part 2 of this chapter.

40 CFR 72.11 Computation of time.

(a) Unless otherwise stated, any time period scheduled, under the Acid Rain Program, to begin

Copyright 1993-1997, The Bureau of National Affairs, Inc.

(i) The certificate of representation for the designated representative for the source and each affected unit at the source and all documents that demonstrate the truth of the statements in the certificate of representation, in accordance with §72.24; *provided* that the certificate and documents shall be retained on site at the source beyond such 5-year period until such documents are superseded because of the submission of a new certificate of representation changing the designated representative.

(ii) All emissions monitoring information, in accordance with part 75 of this chapter.

(iii) Copies of all reports, compliance certifications, and other submissions and all records made or required under the Acid Rain Program.

(iv) Copies of all documents used to complete an Acid Rain permit application and any other submission under the Acid Rain Program or to demonstrate compliance with the requirements of the Acid Rain Program.

(2) The designated representative of an affected source and each affected unit at the source shall submit the reports and compliance certifications required under the Acid Rain Program, including those under subpart I of this part and part 75 of this chapter.

(g) *Liability.*

(1) Any person who knowingly violates any requirement or prohibition of the Acid Rain Program, a complete Acid Rain permit application, an Acid Rain permit, or a written exemption under §72.7 or §72.8 , including any requirement for the payment of any penalty owed to the United States, shall be subject to enforcement pursuant to section 113(c) of the Act.

(2) Any person who knowingly makes a false, material statement in any record, submission, or report under the Acid Rain Program shall be subject to criminal enforcement pursuant to section 113(c) of the Act and 18 U.S.C. 1001.

(3) No permit revision shall excuse any violation of the requirements of the Acid Rain Program that occurs prior to the date that the revision takes effect.

(4) Each affected source and each affected unit shall meet the requirements of the Acid Rain Program.

(5) Any provision of the Acid Rain Program that applies to an affected source (including a provision applicable to the designated representative of an affected source) shall also apply to the owners and operators of such source and of the affected units at the source.

[§72.9(g)(6) and (7) revised at 60 FR 17111, April 4, 1995]

(6) Any provision of the Acid Rain Program that applies to an affected unit (including a provision applicable to the designated representative of an affected unit) shall also apply to the

Copyright 1993-1997, The Bureau of National Affairs, Inc.

(iii) Starting January 1, 2000, an affected unit under §72.6(a)(2) that is not a substitution or compensating unit; or

(iv) Starting on the later of January 1, 2000 or the deadline for monitor certification under part 75 of this chapter, an affected unit under §72.6(a)(3) that is not a substitution or compensating unit.

(4) Allowances shall be held in, deducted from, or transferred among Allowance Tracking System accounts in accordance with the Acid Rain Program.

(5) An allowance shall not be deducted, in order to comply with the requirements under paragraph (c)(1)(i) of this section, prior to the calendar year for which the allowance was allocated.

(6) An allowance allocated by the Administrator under the Acid Rain Program is a limited authorization to emit sulfur dioxide in accordance with the Acid Rain Program. No provision of the Acid Rain Program, the Acid Rain permit application, the Acid Rain permit , or the written exemption under §§72.7 and 72.8 and no provision of law shall be construed to limit the authority of the United States to terminate or limit such authorization.

(7) An allowance allocated by the Administrator under the Acid Rain Program does not constitute a property right.

(d) *Nitrogen Oxides Requirements.* The owners and operators of the source and each affected unit at the source shall comply with the applicable Acid Rain emissions limitation for nitrogen oxides.

(e) *Excess Emissions Requirements.*

(1) The designated representative of an affected unit that has excess emissions in any calendar year shall submit a proposed offset plan, as required under part 77 of this chapter.

(2) The owners and operators of an affected unit that has excess emissions in any calendar year shall:

(i) Pay without demand the penalty required, and pay upon demand the interest on that penalty, as required by part 77 of this chapter; and

(ii) Comply with the terms of an approved offset plan, as required by part 77 of this chapter.

(f) *Recordkeeping and Reporting Requirements.*

(1) Unless otherwise provided, the owners and operators of the source and each affected unit at the source shall keep on site at the source each of the following documents for a period of 5 years from the date the document is created. This period may be extended for cause, at any time prior to the end of 5 years, in writing by the Administrator or permitting authority.

Copyright 1993-1997, The Bureau of National Affairs, Inc.

Acid Rain permit.

(2) The owners and operators of each affected source and each affected unit at the source shall:

(i) Operate the unit in compliance with a complete Acid Rain permit application or a superseding Acid Rain permit issued by the permitting authority; and

(ii) Have an Acid Rain Permit.

(b) *Monitoring Requirements.*

(1) The owners and operators and, to the extent applicable, designated representative of each affected source and each affected unit at the source shall comply with the monitoring requirements as provided in part 75 of this chapter and section 407 of the Act and regulations implementing section 407 of the Act.

(2) The emissions measurements recorded and reported in accordance with part 75 of this chapter and section 407 of the Act and regulations implementing section 407 of the Act shall be used to determine compliance by the unit with the Acid Rain emissions limitations and emissions reduction requirements for sulfur dioxide and nitrogen oxides under the Acid Rain Program.

(3) The requirements of part 75 of this chapter and regulations implementing section 407 of the Act shall not affect the responsibility of the owners and operators to monitor emissions of other pollutants or other emissions characteristics at the unit under other applicable requirements of the Act and other provisions of the operating permit for the source.

(c) *Sulfur Dioxide Requirements.*

(1) The owners and operators of each source and each affected unit at the source shall:

(i) Hold allowances, as of the allowance transfer deadline, in the unit's compliance subaccount (after deductions under §73.34(c) of this chapter) not less than the total annual emissions of sulfur dioxide for the previous calendar year from the unit; and

(ii) Comply with the applicable Acid Rain emissions limitation for sulfur dioxide.

(2) Each ton of sulfur dioxide emitted in excess of the Acid Rain emissions limitations for sulfur dioxide shall constitute a separate violation of the Act.

(3) An affected unit shall be subject to the requirements under paragraph (c)(1) of this section as follows:

(i) Starting January 1, 1995, an affected unit under §72.6(a)(1);

(ii) Starting on or after January 1, 1995 in accordance with §§72.41 and 72.43 , an affected unit under §72.6(a) (2) or (3) that is a substitution or compensating unit;

Copyright 1993-1997, The Bureau of National Affairs, Inc.

(ii) Issuing or denying a draft written exemption that is treated as the issuance or denial of a draft permit under such provisions; and

[§72.8(c)(2)(ii) corrected at 58 FR 40746, July 30, 1993]

(iii) Where the Administrator is the permitting authority, issuing or denying a written exemption that is treated as a permit under subpart F of this part or, where a State is the permitting authority, issuing or denying a proposed written exemption that is treated as a proposed permit under subpart G of this part and part 70 of this chapter; *provided* that no provision under subparts F and G of this part and part 70 of this chapter concerning, the content, effective date, or term of an Acid Rain permit shall apply to the written exemption or proposed written exemption under this section.

(3) A written exemption issued under this section shall have a term of 5 years, except as provided in paragraph (d)(3) of this section.

(d) *Special Provisions.*

(1) A unit exempted under this section shall not emit any sulfur dioxide and nitrogen dioxide starting on the date it is exempted.

(2) The owners and operators of a unit exempted under this section shall comply with monitoring requirements in accordance with part 75 of this chapter and will be allocated allowances in accordance with part 73 of this chapter.

(3) A unit exempted under this section shall not resume operation unless the designated representative of the source that includes the unit submits an Acid Rain permit application for the unit not less than 24 months prior to the later of January 1, 2000 or the date the unit is to resume operation. On the earlier of the date the written exemption expires or the date an Acid Rain permit application is submitted or is required to be submitted under this paragraph, the unit shall no longer be exempted under this section and shall be subject to all requirements of this part.

40 CFR 72.9 Standard requirements.

(a) *Permit Requirements.*

(1) The designated representative of each affected source and each affected unit at the source shall:

(i) Submit a complete Acid Rain permit application (including a compliance plan) under this part in accordance with the deadlines specified in §72.30;

(ii) Submit in a timely manner a complete reduced utilization plan if required under §72.43; and

(iii) Submit in a timely manner any supplemental information that the permitting authority determines is necessary in order to review an Acid Rain permit application and issue or deny an

Copyright 1993-1997, The Bureau of National Affairs, Inc.

requirements of this part.

(2) A petition under this section shall be submitted on or before:

(i) The deadline for submitting an Acid Rain permit application for Phase II; or

(ii) If the unit has a Phase II Acid Rain permit, the deadline for reapplying for such permit.

(3) The petition under this section shall include the following elements in a format prescribed by the Administrator:

(i) Identification of the unit.

(ii) The applicable deadline under paragraph (b)(2) of this section

(iii) The actual or expected date of retirement of the unit.

(iv) The following statement: "I certify that this unit [`is' or `will be', as applicable] permanently retired on the date specified in this petition and will not emit any sulfur dioxide or nitrogen oxides after such date."

(v) A description of any actions that have been or will be taken and provide the basis for the certification in paragraph (b)(3)(iv) of this section.

(iv) The special provisions in paragraph (d) of this section.

(c) *Permitting Authority's Action.*

(1) (i) The permitting authority shall issue, for any unit meeting the requirements of paragraphs (a) and (b) of this section, a written exemption from the requirements of this part except for the requirements specified in this section and §§72.1 through 72.6 and §§72.10 through 72.13 .

(ii) The exemption shall take effect on January 1 of the year following the earlier of the date on which the written exemption is issued subject to administrative appeal under part 78 of this chapter or is issued as a final agency action subject to judicial review, in accordance with paragraph (c)(2) of this section; *provided* that the owners and operators, and, to the extent applicable, the designated representative, shall comply with the requirements of this part concerning all years for which the unit was not exempted, even if such requirements arise or must be complied with after the exemption takes effect. The exemption shall not be a defense against any violation of such requirements of the Acid Rain Program whether the violation occurs before or after the exemption takes effect.

(2) In considering and issuing or denying a written exemption under paragraph (c)(1) of this section, the permitting authority shall apply the procedures in subparts F and G of this part and part 70 of this chapter, as applicable, by:

(i) Treating the petition as an Acid Rain permit application under such provisions;

Copyright 1993-1997, The Bureau of National Affairs, Inc.

or ASTM D4294-90 (all methods incorporated by reference under §72.13 of this part.)

(ii) For natural gas that the unit burns starting on the first day on which the exemption takes effect until the exemption terminates, the sulfur content shall be assumed to be 0.05 per cent or less by weight.

(iii) For gaseous fuel (other than natural gas) that the unit burns starting on the first day on which the exemption takes effect until the exemption terminates, a sample of each delivery of such fuel shall be tested using ASTM methods ASTM D1072-90 and ASTM D1265-92 (incorporated by reference under §72.13 of this part); *provided* that if the gaseous fuel is delivered by pipeline to the unit, a sample of the fuel shall be tested, at least once every quarter in which the unit operates during any year for which the exemption is in effect, using ASTM method ASTM D1072-90 (incorporated by reference under §72.13 of this part).

(3) The owners and operators of each unit exempted under this section shall retain at the source that includes the unit, the records of the results of the tests performed under paragraph (d)(2) (i) and (iii) of this section and a copy of the purchase agreements for the fuel under paragraph (d)(2) of this section, stating the sulfur content of such fuel. Such records and documents shall be retained for 5 years from the date they are created.

(4) On the earlier of the date the written exemption expires, the date a unit exempted under this section burns any fuel with a sulfur content in excess of 0.05 percent by weight (as determined in accordance with paragraph (d)(2) of this section), or 24 months prior to the date the unit first serves one or more generators with total nameplate capacity in excess of 25 MWe, the unit shall no longer be exempted under this section and shall be subject to all requirements of the Acid Rain Program, except that:

(i) Notwithstanding §72.30 (b) and (c), the designated representative of the source that includes the unit shall submit a complete Acid Rain permit application on the later of January 1, 1998 or the date the unit is no longer exempted under this section.

(ii) For purposes of applying monitoring requirements under part 75 of this chapter, the unit shall be treated as a new unit that commenced commercial operation on the date the unit no longer meets the requirements of paragraph (a) of this section.

40 CFR 72.8 Retired units exemption.

(a) *Applicability.* This section applies to any affected unit that is retired prior to the issuance (including renewal) of a Phase II Acid Rain permit for the unit as a final agency action.

(b) *Petition for Written Exemption.*

(1) The designated representative, authorized in accordance with subpart B of this part, of a source that includes a unit under paragraph (a) of this section may petition the permitting authority for a written exemption, or to renew a written exemption, for the unit from certain

Copyright 1993-1997, The Bureau of National Affairs, Inc.

(ii) The exemption shall take effect on January 1 of the year immediately following the earlier of the date on which the written exemption is issued subject to administrative appeal under part 78 of this chapter or is issued as a final agency action subject to judicial review, in accordance with paragraph (c)(2) of this section; *provided* that the owners and operators, and, to the extent applicable, the designated representative, shall comply with the requirements of the Acid Rain Program concerning all years for which the unit was not exempted, even if such requirements arise, or must be complied with, after the exemption takes effect. The exemption shall not be a defense against any violation of such requirements of the Acid Rain Program whether the violation occurs before or after the exemption takes effect.

(2) In considering and issuing or denying a written exemption under paragraph (c)(1) of this section, the permitting authority shall apply the procedures in subparts F and G of this part and part 70 of this chapter, as applicable, by:

(i) Treating the petition as an Acid Rain permit application under such provisions;

(ii) Issuing or denying a draft written exemption that is treated as the issuance or denial of a draft permit under such provisions; and

(iii) Where the Administrator is the permitting authority, issuing or denying a written exemption that is treated as the issuance or denial of a permit under subpart F of this part or, where a State is the permitting authority, issuing or denying a proposed written exemption that is treated as the issuance or denial of a proposed permit under subpart G of this part and part 70 of this chapter; *provided* that no provision under subparts F and G of this part and part 70 of this chapter concerning the content, effective date, or term of an Acid Rain permit shall apply to the written exemption or proposed written exemption under this section.

(3) A written exemption issued under this section shall have a term of 5 years from its effective date, except as provided in paragraph (d)(4) of this section.

(d) *Special Provisions.*

(1) The owners and operators of each unit exempted under this section shall surrender allowances equal in number to, and with the same or an earlier compliance use date as, all of those allocated to the unit under subpart B of part 73 of this chapter for any year for which the unit is exempted and shall waive the right to receive any allowances to be allocated under subpart B of part 73 of this chapter for any year for which the unit is exempted.

(2) The owners and operators of each unit exempted under this section shall determine the sulfur content by weight of its fuel as follows:

(i) For petroleum or petroleum products that the unit burns starting on the first day on which the exemption takes effect until the exemption terminates, a sample of each delivery of such fuel shall be tested using ASTM methods ASTM D4057-88 and ASTM D129-91, ASTM D2622-92,

Copyright 1993-1997, The Bureau of National Affairs, Inc.

(4) *Response.* The Administrator will issue a written response based upon the factual submittal meeting the requirements of paragraph (c)(1) of this section.

(5) *Administrative Appeals.* The Administrator's determination of applicability is a decision appealable under 40 CFR part 78 of this chapter.

(6) *Effect of Determination.* The Administrator's determination of applicability shall be binding upon the permitting authority, unless the petition is found to have contained significant errors or omissions.

[§72.6(c) added at 58 FR 15647, March 23, 1993]

40 CFR 72.7 New units exemption.

(a) *Applicability.* This section applies to any new utility unit that serves one or more generators with total nameplate capacity of 25 MWe or less and bums only fuels with a sulfur content of 0.05 percent or less by weight, as determined in accordance with paragraph (d)(2) of this section.

(b) *Petition for Written Exemption.* The designated representative, authorized in accordance with subpart B of this part, of a source that includes a unit under paragraph (a) of this section may petition the permitting authority for a written exemption, or to renew a written exemption, for the unit from certain requirements of the Acid Rain Program. The petition shall include the following elements in a format prescribed by the Administrator:

(1) Identification of the unit.

(2) The nameplate capacity of each generator served by the unit.

(3) A list of all fuels currently burned by the unit and their percentage sulfur content by weight, determined in accordance with paragraph (a) of this section.

(4) A list of all fuels that are expected to be burned by the unit and their sulfur content by weight.

(5) The special provisions in paragraph (d) of this section.

(c) *Permitting Authority's Action.*

(1) (i) The permitting authority shall issue, for any unit meeting the requirements of paragraphs (a) and (b) of this section, a written exemption from the requirements of the Acid Rain Program except for the requirements specified in this section and §§72.1 through 72.6 and §§72.10 through 72.13 ; *provided* that no unit shall be exempted unless allowances, equal in number to, and with the same or earlier compliance use date as, all of those allocated under subpart B of part 73 of this chapter for any year for which the unit will be exempted, are deducted from the unit's Allowance Tracking System account.

Copyright 1993-1997, The Bureau of National Affairs, Inc.

output capacity not exceeding 130 percent of the total planned net output capacity. If the emissions rates of the units are not the same, the Administrator may exercise discretion to designate which units are exempt.

[§72.6(b)(5) added at 58 FR 15647, March 23, 1993]

(6) An independent power production facility that:

(i) Has, as of November 15, 1990, one or more qualifying power purchase commitments to sell at least 15 percent of its total planned net output capacity; and

(ii) Consists of one or more units designated by the owner or operator with total installed net output capacity not exceeding 130 percent of its total planned net output capacity. If the emissions rates of the units are not the same, the Administrator may exercise discretion to designate which units are exempt.

[§72.6(b)(6) added at 58 FR 15647, March 23, 1993]

(7) A solid waste incinerator, if more than 80 percent (on a Btu basis) of the annual fuel consumed at such incinerator is other than fossil fuels. For solid waste incinerators which began operation before January 1, 1985, the average annual fuel consumption of non-fossil fuels for calendar years 1985 through 1987 must be greater than 80 percent for such an incinerator to be exempt. For solid waste incinerators which began operation after January 1, 1985, the average annual fuel consumption of non-fossil fuels for the first three years of operation must be greater than 80 percent for such an incinerator to be exempt. If, during any three calendar year period after November 15, 1990, such incinerator consumes 20 percent or more (on a Btu basis) fossil fuel, such incinerator will be an affected source under the Acid Rain Program.

[§72.6(b)(7) added at 58 FR 15647, March 23, 1993]

(8) A non-utility unit.

(c) A certifying official of any unit may petition the Administrator for a determination of applicability under this section.

(1) *Petition Content.* The petition shall be in writing and include identification of the unit and relevant and appropriate facts about the unit. The petition shall meet the requirements of §72.21 . In accordance with §72.21(d), the certifying official shall provide each owner or operator of the unit, facility, or source with a copy of the petition and a copy of the Administrator's response.

(2) *Timing.* The petition shall be submitted to the Administrator prior to the issuance (including renewal) of a Phase II Acid Rain permit for the unit as a final agency action.

(3) *Submission.* All submittals under this section shall be made by the certifying official to the Director, Acid Rain Division, (6204J), 401 M Street, SW., Washington, DC, 20460.

Copyright 1993-1997, The Bureau of National Affairs, Inc.

[§72.6(a)(3)(vii) added at 58 FR 15647, March 23, 1993]

(b) The following types of units are not affected units subject to the requirements of the Acid Rain Program:

(1) A simple combustion turbine that commenced operation before November 15, 1990.

(2) Any unit that commenced commercial operation before November 15, 1990 and that did not, as of November 15, 1990, and does not currently, serve a generator with a nameplate capacity of greater than 25 MWe.

(3) Any unit that, during 1985, did not serve a generator that produced electricity for sale and that did not, as of November 15, 1990, and does not currently, serve a generator that produces electricity for sale.

(4) A cogeneration facility which:

(i) For a unit that commenced construction on or prior to November 15, 1990, was constructed for the purpose of supplying equal to or less than one-third its potential electrical output capacity or equal to or less than 219,000 MWe-hrs actual electric output on an annual basis to any utility power distribution system for sale (on a gross basis). If the purpose of construction is not known, the Administrator will presume that actual operation from 1985 through 1987 is consistent with such purpose. However, if in any three calendar year period after November 15, 1990, such unit sells to a utility power distribution system an annual average of more than one-third of its potential electrical output capacity and more than 219,000 MWe-hrs actual electric output (on a gross basis), that unit shall be an affected unit, subject to the requirements of the Acid Rain Program; or

(ii) For units which commenced construction after November 15, 1990, supplies equal to or less than one-third its potential electrical output capacity or equal to or less than 219,000 MWe-hrs actual electric output on an annual basis to any utility power distribution system for sale (on a gross basis). However, if in any three calendar year period after November 15, 1990, such unit sells to a utility power distribution system an annual average of more than one-third of its potential electrical output capacity and more than 219,000 MWe-hrs actual electric output (on a gross basis), that unit shall be an affected unit, subject to the requirements of the Acid Rain Program.

[§72.6(b)(4) added at 58 FR 15647, March 23, 1993]

(5) A qualifying facility that:

(i) Has, as of November 15, 1990, one or more qualifying power purchase commitments to sell at least 15 percent of its total planned net output capacity; and

(ii) Consists of one or more units designated by the owner or operator with total installed net

Copyright 1993-1997, The Bureau of National Affairs, Inc.

requirements.

40 CFR 72.6 Applicability.

(a) Each of the following units shall be an affected unit, and any source that includes such a unit shall be an affected source, subject to the requirements of the Acid Rain Program:

(1) A unit listed in Table 1 of §73.10(a) of this chapter.

(2) A unit that is listed in Table 2 or 3 of §73.10 of this chapter and any other existing utility unit, except a unit under paragraph (b) of this section.

[§72.6(a)(2) amended at 58 FR 15647, March 23, 1993]

(3) A utility unit, except a unit under paragraph (b) of this section, that:

(i) Is a new unit; or

(ii) Did not serve a generator with a nameplate capacity greater than 25 MWe on November 15, 1990 but serves such a generator after November 15, 1990.

(iii) Was a simple combustion turbine on November 15, 1990 but adds or uses auxiliary firing after November 15, 1990;

[§72.6(a)(3)(iii) added at 58 FR 15647, March 23, 1993]

(iv) Was an exempt cogeneration facility under paragraph (b)(4) of this section but during any three calendar year period after November 15, 1990 sold, to a utility power distribution system, an annual average of more than one-third of its potential electrical output capacity and more than 219,000 MWe-hrs electric output, on a gross basis;

[§72.6(a)(3)(iv) added at 58 FR 15647, March 23, 1993]

(v) Was an exempt qualifying facility under paragraph (b)(5) of this section but, at any time after the later of November 15, 1990 or the date the facility commences commercial operation, fails to meet the definition of qualifying facility;

[§72.6(a)(3)(v) added at 58 FR 15647, March 23, 1993]

(vi) Was an exempt IPP under paragraph (b)(6) of this section but, at any time after the later of November 15, 1990 or the date the facility commences commercial operation, fails to meet the definition of independent power production facility; or

[§72.6(a)(3)(vi) added at 58 FR 15647, March 23, 1993]

(vii) Was an exempt solid waste incinerator under paragraph (b)(7) of this section but during any three calendar year period after November 15, 1990 consumes 20 percent or more (on a Btu basis) fossil fuel.

Copyright 1993-1997, The Bureau of National Affairs, Inc.

MWge—gross megawatt electrical.
ppm—parts per million.
psi—pounds per square inch.
°R—degree Rankine.
scf—cubic feet at standard conditions.
scfh—cubic feet per hour at standard conditions.
sec—second.
std—at standard conditions.
CO_2—carbon dioxide.
NO_x—nitrogen oxides.
O_2—oxygen.
THC—total hydrocarbon content.
SO_2—sulfur dioxide.

40 CFR 72.4 Federal authority.

(a) The Administrator reserves all authority under sections 112(r)(9), 113 , 114 , 120 , 301 , 303 , 304 , 306 , and 307 of the Act, including, but not limited to, the authority to:

[§72.4(a)(1) and (2) revised at 60 FR 17111, April 4, 1995]

(1) Secure information needed for the purpose of developing, revising, or implementing, or of determining whether any person is in violation of, any standard, method, requirement, or prohibition of the Act, this part, parts 73, 74, 75, 76, 77, and 78 of this chapter;

(2) Make inspections, conduct tests, examine records, and require an owner or operator of an affected unit to submit information reasonably required for the purpose of developing, revising, or implementing, or of determining whether any person is in violation of, any standard, method, requirement, or prohibition of the Act, this part, parts 73, 74, 75, 76, 77, and 78 of this chapter;

(3) Issue orders, call witnesses, and compel the production of documents.

(b) The Administrator reserves the right under title IV of the Act to take any action necessary to protect the orderly and competitive functioning of the allowance system, including actions to prevent fraud and misrepresentation.

40 CFR 72.5 State authority.

Consistent with section 116 of the Act, the provisions of the Acid Rain Program shall not be construed in any manner to preclude any State from adopting and enforcing any other air quality requirement (including any continuous emissions monitoring) that is not less stringent than, and does not alter, any requirement applicable to an affected unit or affected source under the Acid Rain Program; *provided* that such State requirement, if articulated in an operating permit, is in a portion of the operating permit separate from the portion containing the Acid Rain Program

Copyright 1993-1997, The Bureau of National Affairs, Inc.

air conditioned and purified by a continuous emission monitoring system for which the continuous emission monitoring system manufacturer or vendor certifies that the particular continuous emission monitoring system model produces conditioned gas that does not contain concentrations of either SO_2 or NO_X above 0.1 ppm or CO_2 above 400 ppm; and that does not contain concentrations of other gases that interfere with instrument readings or cause the instrument to read concentrations of SO_2, NO_X, or CO_2 for a particular continuous emission monitoring system model.

[Added at 60 FR 26513, May 17, 1995]

Zero ambient air material

[Removed at 60 FR 26513, May 17, 1995]

40 CFR 72.3 Measurements, abbreviations, and acronyms.

Measurements, abbreviations, and acronyms used in this part are defined as follows:

acfh—actual cubic feet per hour.
atm—atmosphere.
bbl—barrel.
Btu—British thermal unit.
°C—degree Celsius (centigrade).
cfm—cubic feet per minute.
cm—centimeter.
dcf—dry cubic feet.
DOE—Department of Energy.
dscf—dry cubic feet at standard conditions.
dscfh—dry cubic feet per hour at standard conditions.
EIA—Energy Information Administration.
eq—equivalent.
°F—degree Fahrenheit.
fps—feet per second.
gal—gallon.
hr—hour.
in—inch.
°K—degree Kelvin.
Kwh—kilowatt hour.
lb—pounds.
m—meter.
mmBtu—million Btu.
min—minute.
mol. wt.—molecular weight.
MWe—megawatt electrical.

Copyright 1993-1997, The Bureau of National Affairs, Inc.

Unit operating day means a calendar day in which a unit combusts any fuel.

[Added at 60 FR 26513, May 17, 1995]

Unit operating hour means any hour (or fraction of an hour) during which a unit combusts any fuel.

[Amended at 60 FR 26513, May 17, 1995]

Unit operating quarter means a calendar quarter in which a unit combusts any fuel.

[Added at 60 FR 26513, May 17, 1995]

Utility means any person that sells electricity.

Utility competitive bid solicitation is a public request from a regulated utility for offers to the utility for meeting future generating needs. A qualifying facility, independent power production facility, or new IPP may be regarded as having been "selected" in such solicitation if the utility has named the facility as a project with which the utility intends to negotiate a power sales agreement.

[Amended at 58 FR 15647, March 23, 1993]

Utility regulatory authority means an authority, board, commission, or other entity (limited to the local-, State-, or federal-level, whenever so specified) responsible for overseeing the business operations of utilities located within its jurisdiction, including, but not limited to, utility rates and charges to customers.

Utility system means all interconnected units and generators operated by the same utility operating company.

[Amended at 60 FR 18468, April 11, 1995]

Utility unit means a unit owned or operated by a utility:

(1) That serves a generator in any State that produces electricity for sale, or

(2) That during 1985, served a generator in any State that produced electricity for sale.

(3) Notwithstanding paragraphs (1) and (2) of this definition, a unit that was in operation during 1985, but did not serve a generator that produced electricity for sale during 1985, and did not commence commercial operation on or after November 15, 1990 is not a utility unit for purposes of the Acid Rain Program.

(4) Notwithstanding paragraphs (1) and (2) of this definition, a unit that cogenerates steam and electricity is not a utility unit for purposes of the Acid Rain Program, unless the unit is constructed for the purpose of supplying, or commences construction after November 15, 1990 and supplies, more than one-third of its potential electrical output capacity and more than 25 MWe output to any power distribution system for sale.

Utilization means the heat input (expressed in mmBtu/time) for a unit.

Volumetric flow means the rate of movement of a specified volume of gas past a cross-sectional area (e.g., cubic feet per hour).

Zero air material means either: (1) a calibration gas certified by the gas vendor not to contain concentrations of either SO_2, NO_X, or total hydrocarbons above 0.1 parts per million (ppm); a concentration of CO above 1 ppm; and a concentration of CO_2 above 400 ppm, or (2) ambient

Copyright 1993-1997, The Bureau of National Affairs, Inc.

system is not functional or is operating outside applicable performance specifications.

Substitution unit means an affected unit, other than a unit under section 410 of the Act, that is designated as a Phase I unit in a substitution plan under §72.41.

Sulfur-free generation means: the generation of electricity by a process that does not have any emissions of sulfur dioxide, including hydroelectric, nuclear, solar, or wind generation. A "sulfur-free generator" is a generator that is located in one of the 48 contiguous States or the District of Columbia and produces "sulfur-free generation."

[Revised at 60 FR 18468, April 11, 1995]

Supply-side measure means a measure to improve the efficiency of the generation, transmission, or distribution of electricity, implemented by a utility in connection with its operations or facilities to provide electricity to its customers, and includes the measures set forth in part 73, Appendix A, section 2 of this chapter.

Thermal energy means the thermal output produced by a combustion source used directly as part of a manufacturing process but not used to produce electricity.

[Added at 60 FR 17111, April 4, 1995]

Total planned net output capacity means the planned generator output capacity, excluding that portion of the electrical power which is designed to be used at the power production facility, as specified under one or more qualifying power purchase commitments or contemporaneous documents as of November 15, 1990; "Total installed net output capacity" shall be the generator output capacity, excluding that portion of the electrical power actually used at the power production facility, as installed.

[Added at 58 FR 15647, March 23, 1993]

Ton or tonnage means any "short ton" (i.e., 2,000 pounds). For the purpose of determining compliance with the Acid Rain emissions limitations and reduction requirements, total tons for a year shall be calculated as the sum of all recorded hourly emissions (or the tonnage equivalent of the recorded hourly emissions rates) in accordance with part 75 of this chapter, with any remaining fraction of a ton equal to or greater than 0.50 ton deemed to equal one ton and any fraction of a ton less than 0.50 ton deemed not to equal any ton.

Transfer unit means a Phase I unit that transfers all or part of its Phase I emission reduction obligations to a control unit designated pursuant to a Phase I extension plan under §72.42 .

Underutilization means a reduction, during any calendar year in Phase I, of the heat input (expressed in mmBtu for the calendar year) at a Phase I unit below the unit's baseline.

Unit means a fossil fuel-fired combustion device.

Unit account means an Allowance Tracking System account, established by the Administrator for an affected unit pursuant to §73.31 (a) or (b) of this chapter.

Unit load means the total (i.e., gross) output of a unit or source in any calendar year (or other specified time period) produced by combusting a given heat input of fuel, expressed in terms of:

(1) The total electrical generation (MWe) for use within the plant and for sale; or

(2) In the case of a unit or source that uses part of its heat input for purposes other than electrical generation, the total steam pressure (psia) produced by the unit or source.

Copyright 1993-1997, The Bureau of National Affairs, Inc.

Span means the range of values that a monitor component is required to be capable of measuring under part 75 of this chapter.

Spot allowance means an allowance that may be used for purposes of compliance with a unit's Acid Rain sulfur dioxide emissions limitation requirements beginning in the year in which the allowance is offered for sale.

Spot Auction means an auction of a spot allowance.

Spot Sale means a sale of a spot allowance.

Stack means a structure that includes one or more flues and the housing for the flues.

Standard conditions means 68°F at 1 atm (29.92 in. of mercury).

Standard reference material or *SRM* means a calibration gas mixture issued and certified by NIST as having specific known chemical or physical property values.

State means one of the 48 contiguous States and the District of Columbia and includes any non-federal authorities, including local agencies, interstate associations, and State-wide agencies with approved State operating permit programs. The term "State" shall have its conventional meaning where such meaning is clear from the context.

State operating permit program means an operating permit program that the Administrator has approved as meeting the requirements of titles IV and V of the Act, part 70 of this chapter, and this part, including subpart G of this part.

Stationary gas turbine means a turbine that is not self-propelled and that combusts natural gas, other gaseous fuel with a sulfur content no greater than natural gas, or fuel oil in order to heat inlet combustion air and thereby turn a turbine, in addition to or instead of producing steam or heating water.

[Amended at 60 FR 26513, May 17, 1995]

Steam sales agreement is a legally binding agreement between a QF, IPP, new IPP, or firm associated with such facility and an industrial or commercial establishment requiring steam that establishes the terms and conditions under which the facility will supply steam to the establishment.

[Amended at 58 FR 15647, March 23, 1993]

Submit or serve means to send or transmit a document, information, or correspondence to the person specified in accordance with the applicable regulation:

(1) In person;

(2) By United States Postal Service certified mail with the official postmark or, if service is by the Administrator or the permitting authority, by any other mail service by the United States Postal Service; or

(3) By other means with an equivalent time and date mark used in the regular course of business to indicate the date of dispatch or transmission and a record of prompt delivery. Compliance with any "submission", "service", or "mailing" deadline shall be determined by the date of dispatch, transmission, or mailing and not the date of receipt.

Substitute data means emissions or volumetric flow data provided to assure 100 percent recording and reporting of emissions when all or part of the continuous emission monitoring

Copyright 1993-1997, The Bureau of National Affairs, Inc.

applicable reference method(s) plus the 2.5 percent error confidence coefficient of a series of tests divided by the mean of the reference method tests in accordance with part 75 of this chapter.

Replacement unit means an affected unit replacing the thermal energy provided by an opt-in source, where both the affected unit and the opt-in source are governed by a thermal energy plan.

[Added at 60 FR 17111, April 4, 1995]

Research gas material (RGM) means a calibration gas mixture developed by agreement of a requestor and the National Institutes for Standards and Technologies (NIST) that NIST analyzes and certifies as "NIST traceable." RGMs may have concentrations different from those of standard reference materials.

[Added at 60 FR 26513, May 17, 1995]

Schedule of compliance means an enforceable sequence of actions, measures, or operations designed to achieve or maintain compliance, or correct non-compliance, with an applicable requirement of the Acid Rain Program, including any applicable Acid Rain permit requirement.

Secretary of Energy means the Secretary of the United States Department of Energy or the Secretary's duly authorized representative.

Serial number means, when referring to allowances, the unique identification number assigned to each allowance by the Administrator, pursuant to §73.34(d) of this chapter.

Simple combustion turbine means a unit that is a rotary engine driven by a gas under pressure that is created by the combustion of any fuel. This term includes combined cycle units without auxiliary firing. This term excludes combined cycle units with auxiliary firing, unless the unit did not use the auxiliary firing from 1985 through 1987 and does not use auxiliary firing at any time after November 15, 1990.

[Amended at 58 FR 15647, March 23, 1993]

Site lease, as used in part 73, subpart E of this chapter, means a legally-binding agreement signed between a new IPP or a firm associated with a new IPP and a site owner that establishes the terms and conditions under which the new IPP or the firm associated with the new IPP has the binding right to utilize a specific site for the purposes of operating or constructing the new IPP.

Small Diesel Refinery means a domestic motor diesel fuel refinery or portion of a refinery that, as an annual average of calendar years 1988 through 1990 and as reported to the Department of Energy on Form 810, had bona fide crude oil throughput less than 18,250,000 barrels per year, and the refinery or portion of a refinery is owned or controlled by a refiner with a total combined bona fide crude oil throughput of less than 50,187,500 barrels per year.

[Added at 58 FR 15647, March 23, 1993]

Solid Waste Incinerator means a source as defined in section 129(g)(1) of the Act.

[Added at 58 FR 15647, March 23, 1993]

Source means any governmental, institutional, commercial, or industrial structure, installation, plant, building, or facility that emits or has the potential to emit any regulated air pollutant under the Act. For purposes of section 502(c) of the Act, a "source", including a "source" with multiple units, shall be considered a single "facility."

Copyright 1993-1997, The Bureau of National Affairs, Inc.

(1) Replacement of an existing coal- fired boiler with one of the following clean coal technologies: atmospheric or pressurized fluidized bed combustion, integrated gasification combined cycle, magnetohydrodynamics, direct and indirect coal-fired turbines, integrated gasification fuel cells, or as determined by the Administrator, in consultation with the Secretary of Energy, a derivative of one or more of these technologies, and any other technology capable of controlling multiple combustion emissions simultaneously with improved boiler or generation efficiency and with significantly greater waste reduction relative to the performance of technology in widespread commercial use as of the date of enactment of the Clean Air Act Amendments of 1990; or

(2) Any oil- or gas-fired unit that has been awarded clean coal technology demonstration funding as of January 1, 1991, by the Department of Energy.

Quality-assured monitor operating hour means any unit operating hour or portion thereof over which a certified CEMS, or other monitoring system approved by the Administrator under part 75 of this chapter, is operating:

(1) Within the performance specifications set forth in part 75, appendix A of this chapter and the quality assurance/quality control procedures set forth in part 75, appendix B of this chapter, without unscheduled maintenance, repair, or adjustment; and

(2) In accordance with § 75.10(d), (e), and (f) of this chapter.

[Amended at 60 FR 26513, May 17, 1995]

Receive or receipt of means the date the Administrator or a permitting authority comes into possession of information or correspondence (whether sent in writing or by authorized electronic transmission), as indicated in an official correspondence log, or by a notation made on the information or correspondence, by the Administrator or the permitting authority in the regular course of business.

Recordation, record, or recorded means, with regard to allowances, the transfer of allowances by the Administrator from one Allowance Tracking System account or subaccount to another.

Reduced utilization means a reduction, during any calendar year in Phase I, in the heat input (expressed in mmBtu for the calendar year) at a Phase I unit below the unit's baseline, where such reduction subjects the unit to the requirement to submit a reduced utilization plan under §72.43; or, in the case of an opt-in source, means a reduction in the average utilization, as specified in §74.44 of this chapter, of an opt-in source below the opt-in source's baseline.

[Revised at 60 FR 17111, April 4, 1995]

Reference value or reference signal means the known concentration of a calibration gas, the known value of an electronic calibration signal, or the known value of any other measurement standard approved by the Administrator, assumed to be the true value for the pollutant or diluent concentration or volumetric flow being measured.

Relative accuracy means a statistic designed to provide a measure of the systematic and random errors associated with data from continuous emission monitoring systems, and is expressed as the absolute mean difference between the pollutant concentration or volumetric flow measured by the pollutant concentration or flow monitor and the value determined by the

Copyright 1993-1997, The Bureau of National Affairs, Inc.

[Amended at 58 FR 15647, March 23, 1993]

Power sales agreement is a legally- binding agreement between a new IPP or a firm associated with a new IPP and a regulated electric utility that establishes the terms and conditions for the sale of power from the new IPP to the utility.

[Amended at 58 FR 15647, March 23, 1993]

Presiding Officer means an Administrative Law Judge appointed under 5 U.S.C. 3105 and designated to preside at a hearing in an appeal under part 78 of this chapter or an EPA lawyer designated to preside at any such hearing under §78.6(b)(3)(ii) of this chapter.

Primary fuel or primary fuel supply means the main fuel type (expressed in mmBtu) consumed by an affected unit for the applicable calendar year.

Proposed Acid Rain permit or proposed permit means, in the case of a State operating permit program, the version of an Acid Rain permit that the permitting authority submits to the Administrator after the public comment period, but prior to completion of the EPA permit review period, as provided for in part 70 of this chapter.

Protocol 1 gas means a calibration gas mixture prepared and analyzed according to the "Procedure for NBS-Traceable Certification of Compressed Gas Working Standards Used for Calibration and Audit of Continuous Emission Monitors ("Revised Traceability Protocol No. 1")," Quality Assurance Handbook for Air Pollution Measurement Systems, Volume III, Stationary Source Specific Methods, Section 3.04, EPA-600/4-77-027b, June 1987 (set forth in Appendix H of part 75 of this chapter) or such revised procedure as approved by the Administrator.

[Corrected at 58 FR 40746, July 30, 1993]

Qualifying facility (QF) means a "qualifying small power production facility" within the meaning of section 3(17)(C) of the Federal Power Act or a "qualifying cogeneration facility" within the meaning of section 3(18)(B) of the Federal Power Act.

[Added at 58 FR 15647, March 23, 1993]

Qualifying Phase I technology means a technological system of continuous emission reduction that is demonstrated to achieve a ninety (90) percent (or greater) reduction in emissions of sulfur dioxide from the emissions that would have resulted from the use of fossil fuels that were not subject to treatment prior to combustion, as provided in §72.42 .

Qualifying power purchase commitment means a power purchase commitment in effect as of November 15, 1990 without regard to changes to that commitment so long as:

(1) The identity of the electric output purchaser; or

(2) The identity of the steam purchaser and the location of the facility, remain unchanged as of the date the facility commences commercial operation; and

(3) The terms and conditions of the power purchase commitment are not changed in such a way as to allow the costs of compliance with the Acid Rain Program to be shifted to the purchaser.

[Added at 58 FR 15647, March 23, 1993]

Qualifying repowering technology means:

Copyright 1993-1997, The Bureau of National Affairs, Inc.

is subject to an Acid Rain emissions reduction requirement or Acid Rain emissions limitations beginning in Phase I.

[Revised at 60 FR 17111, April 4, 1995]

Phase II means the Acid Rain Program period beginning January 1, 2000, and continuing into the future thereafter.

Phase II unit means any affected unit, except an affected unit under part 74 of this chapter, that is subject to an Acid Rain emissions reduction requirement or Acid Rain emissions limitation during Phase II only.

[Revised at 60 FR 17111, April 4, 1995]

Pipeline natural gas means natural gas that is provided by a supplier through a pipeline.

[Added at 60 FR 26513, May 17, 1995]

Pollutant concentration monitor means that component of the continuous emission monitoring system that measures the concentration of a pollutant in a unit's flue gas.

Potential electrical output capacity means the MWe capacity rating for the units which shall be equal to 33 percent of the maximum design heat input capacity of the steam generating unit, as calculated according to appendix D of part 72.

[Added at 58 FR 15647, March 23, 1993]

Power distribution system means the portion of an electricity grid owned or operated by a utility that is dedicated to delivering electric energy to customers.

Power purchase commitment means a commitment or obligation of a utility to purchase electric power from a facility pursuant to:

(1) A power sales agreement;

(2) A state regulatory authority order requiring a utility to:

(i) Enter into a power sales agreement with the facility;

(ii) Purchase from the facility; or

(iii) Enter into arbitration concerning the facility for the purpose of establishing terms and conditions of the utility's purchase of power;

(3) A letter of intent or similar instrument committing to purchase power (actual electrical output or generator output capacity) from the source at a previously offered or lower price and a power sales agreement applicable to the source is executed within the time frame established by the terms of the letter of intent but no later than November 15, 1992 or, where the letter of intent does not specify a timeframe, a power sales agreement applicable to the source is executed on or before November 15, 1992; or

(4) A utility competitive bid solicitation that has resulted in the selection of the qualifying facility or independent power production facility as the winning bidder.

[Added at 58 FR 15647, March 23, 1993]

Power sales agreement is a legally binding agreement between a QF, IPP, new IPP, or firm associated with such facility and a regulated electric utility that establishes the terms and conditions for the sale of power from the facility to the utility.

Copyright 1993-1997, The Bureau of National Affairs, Inc.

Act.

[Added at 60 FR 26513, May 17, 1995]

Peaking unit means:

(1) A unit that has:

(i) An average capacity factor of no more than 10.0 percent during the previous three calendar years and

(ii) A capacity factor of no more than 20.0 percent in each of those calendar years.

(2) For purposes of part 75 of this chapter, a unit may initially qualify as a peaking unit under the following circumstances:

(i) If the designated representative provides capacity factor data for the unit for the three calendar years immediately prior to submission of the monitoring plan and if the unit's capacity factor is projected to change on or before the certification deadline for NO_X monitoring in §75.4 of this chapter, the designated representative submits a demonstration satisfactory to the Administrator that the unit will qualify as a peaking unit under the first sentence of this definition using the three calendar years beginning with the year of the certification deadline for NO_X monitoring in §75.4 of this chapter (either 1995 or 1996) as the three year period; or

(ii) If the unit does not have capacity factor data for any one or more of the three calendar years immediately prior to submission of the monitoring plan, the designated representative submits:

(A) Any capacity factor data, beginning with the unit's first calendar year of commercial operation following the first year of the three calendar years immediately prior to the certification deadline for NO_X monitoring in §75.4of this chapter (either 1992 or 1993),

(B) Capacity factor information for the unit for any remaining future period needed to provide capacity factor data for three consecutive calendar years, and

(C) A demonstration satisfactory to the Administrator that the unit will qualify as a peaking unit under the first sentence of this definition using the three consecutive calendar years specified in (2) (ii) (A) and (B) as the three calendar year period.

[Amended at 60 FR 26513 May 17, 1995]

Permit revision means a permit modification, fast track modification, administrative permit amendment, or automatic permit amendment, as provided in subpart H of this part.

Permitting authority means either

(1) the Administrator in the case of issuance and administration of Acid Rain permits or

(2) the State air pollution control agency, local agency, other State agency, or other agency authorized by the Administrator to issue proposed Acid Rain permits under subpart G of this part and the other regulations promulgated pursuant to titles IV and V of the Act.

Person includes an individual, corporation, partnership, association, State, municipality, political subdivision of a State, any agency, department, or instrumentality of the United States, and any officer, agent, or employee thereof.

Phase I means the Acid Rain Program period beginning January 1, 1995 and ending December 31, 1999.

Phase I unit means any affected unit, except an affected unit under part 74 of this chapter, that

Copyright 1993-1997, The Bureau of National Affairs, Inc.

[Added at 60 FR 17111, April 4, 1995]

Opt-in source means a combustion source or process source that has elected to become an affected unit under the Acid Rain Program and whose opt-in permit has been issued and is in effect.

[Added at 60 FR 17111, April 4, 1995]

Out-of-control period means any period

(1) Beginning with the hour corresponding to the completion of a daily calibration error, linearity check, or quality assurance audit that indicates that the instrument is not measuring and recording within the applicable performance specifications; and

(2) Ending with the hour corresponding to the completion of an additional calibration error, linearity check, or quality assurance audit following corrective action that demonstrates that the instrument is measuring and recording within the applicable performance specifications.

Oversubscription payment deadline means 30 calendar days prior to the allowance transfer deadline.

Owner means any of the following persons:

(1) Any holder of any portion of the legal or equitable title in an affected unit or in a combustion source or process source; or

(2) Any holder of a leasehold interest in an affected unit or in a combustion source or process source; or

(3) Any purchaser of power from an affected unit or from a combustion source or process source under a life-of-the-unit, firm power contractual arrangement as the term is defined herein and used in section 408(i) of the Act. However, unless expressly provided for in a leasehold agreement, owner shall not include a passive lessor, or a person who has an equitable interest through such lessor, whose rental payments are not based, either directly or indirectly, upon the revenues or income from the affected unit; or

(4) With respect to any Allowance Tracking System general account, any person identified in the submission required by §73.31(c) of this chapter that is subject to the binding agreement for the authorized account representative to represent that person's ownership interest with respect to allowances.

[Revised at 60 FR 17111, April 4, 1995]

Owner or operator means any person who is an owner or who operates, controls, or supervises an affected unit, affected source, combustion source, or process source and shall include, but not be limited to, any holding company, utility system, or plant manager of an affected unit, affected source, combustion source, or process source.

[Revised at 60 FR 17111, April 4, 1995]

Ozone nonattainment area means an area designated as a nonattainment area for ozone under subpart C of part 81 of this chapter.

[Added at 60 FR 26513, May 17, 1995]

Ozone transport region means the ozone transport region designated under Section 184 of the

Copyright 1993-1997, The Bureau of National Affairs, Inc.

sulfur dioxide that have occurred at an affected unit in any calendar year.

Oil-fired means:

(1) The combustion of:

(i) Fuel oil for more than 10.0 percent of the average annual heat input during the previous three calendar years or for more than 15.0 percent of the annual heat input during any one of those calendar years; and

(ii) Any solid, liquid, or gaseous fuel (including coal-derived gaseous fuel), other than coal or any other coal derived fuel, for the remaining heat input, if any; provided that for purposes of part 75 of this chapter, any fuel used other than fuel oil shall be limited to gaseous fuels containing no more sulfur than natural gas.

(2) For purposes of part 75 of this chapter, a unit that does not have fuel usage data for one or more of the three calendar years immediately prior to submission of the monitoring plan may initially qualify as oil-fired under the following circumstances: the designated representative submits:

(i) Unit design fuel usage,

(ii) The unit's designed fuel usage,

(iii) Any fuel usage data, beginning with the unit's first calendar year of commercial operation following 1992,

(iv) The unit's projected fuel usage for any remaining future period needed to provide fuel usage data for three consecutive calendar years, and

(v) A demonstration satisfactory to the Administrator that the unit will qualify as oil-fired under the first sentence of this definition using those three consecutive calendar years as the three calendar year period.

[Amended at 60 FR 26513, May 17, 1995]

Opacity means the degree to which emissions reduce the transmission of light and obscure the view of an object in the background.

Operating when referring to a combustion or process source seeking entry into the Opt-in Program, means that the source had documented consumption of fuel input for more than 876 hours in the 6 months immediately preceding the submission of a combustion source's opt-in application under §74.16(a) of this chapter.

[Added at 60 FR 17111, April 4, 1995]

Operating permit means a permit issued under part 70 of this chapter and any other regulations implementing title V of the Act.

Opt in or opt into means to elect to become an affected unit under the Acid Rain Program through the issuance of the final effective opt-in permit under §74.14 of this chapter.

[Added at 60 FR 17111, April 4, 1995]

Opt-in permit means the legally binding written document that is contained within the Acid Rain permit and sets forth the requirements under part 74 of this chapter for a combustion source or a process source that opts into the Acid Rain Program.

Copyright 1993-1997, The Bureau of National Affairs, Inc.

or propane) containing 1 grain or less hydrogen sulfide per 100 standard cubic feet, and 20 grains or less total sulfur per 100 standard cubic feet), produced in geological formations beneath the Earth's surface, and maintaining a gaseous state at standard atmospheric temperature and pressure under ordinary conditions.

[Amended at 60 FR 26513, May 17, 1995]

NERC region means the North American Electric Reliability Council region or, if any, subregion.

Net income neutrality means, in the case of energy conservation measures undertaken by an investor-owned utility whose rates are regulated by a State utility regulatory authority, rates and charges established by the State utility regulatory authority that ensure that the net income earned by the utility on its State-jurisdictional equity investment will be *no lower* as a consequence of its expenditures on cost-effective qualified energy conservation measures and any associated lost sales than it would have been had the utility not made such expenditures, or that the State utility regulatory authority has implemented a ratemaking approach designed to meet this objective.

New independent power production facility or *new IPP* means a unit that:

(1) Commences commercial operation on or after November 15, 1990;

(2) Is nonrecourse project-financed, as defined in 10 CFR part 715;

(3) Sells 80% of electricity generated at wholesale; and

(4) Does not sell electricity to any affiliate or, if it does, demonstrates it cannot obtain the required allowances from such an affiliate.

New unit means a unit that commences commercial operation on or after November 15, 1990, including any such unit that serves a generator with a nameplate capacity of 25 MWe or less or that is a simple combustion turbine.

Ninetieth (90th) percentile means a value that would divide an ordered set of increasing values so that at least 90 percent are less than or equal to the value and at least 10 percent are greater than or equal to the value.

Ninety-fifth (95th) percentile means a value that would divide an ordered set of increasing values so that at least 95 percent of the set are less than or equal to the value and at least 5 percent are greater than or equal to the value.

NIST/EPA-approved certified reference material or NIST/EPA-approved CRM means a calibration gas mixture that has been approved by EPA and the National Institutes of Standards and Technologies (NIST) as having specific known chemical or physical property values certified by a-technically valid procedure as evidenced by a certificate or other documentation issued by a certifying standard-setting body.

NIST traceable reference material (NTRM) means a calibration gas mixture tested by and certified by the National Institutes of Standards and Technologies (NIST) to have a certain specified concentration of gases. NTRMs may have different concentrations from those of standard reference materials.

[Added at 60 FR 26513, May 17, 1995]

Offset plan means a plan pursuant to part 77 of this chapter for offsetting excess emissions of

Copyright 1993-1997, The Bureau of National Affairs, Inc.

the unit determined as of the time the unit was built, with option rights to purchase or release some portion of the nameplate capacity and associated energy generated by the unit at the end of the period.

Mail or serve by mail means to submit or serve by means other than personal service.

Maximum potential NO_X emission rate means the emission rate of nitrogen oxides (in lb/mmBtu) calculated in accordance with section 3 of appendix F of part 75 of this chapter, using the maximum potential nitrogen oxides concentration as defined in section 2 of appendix A of part 75 of this chapter, and either the maximum oxygen concentration (in percent O_2) or the minimum carbon dioxide concentration (in percent CO_2) under all operating conditions of the unit except for unit start-up, shutdown, and upsets.

[Corrected at 58 FR 40746, July 30, 1993; amended at 60 FR 26513, May 17, 1995]

Missing data period means the total number of consecutive hours during which any component part of a certified CEMS or approved alternative monitoring system is not providing quality-assured data, regardless of the reason.

Monitor accuracy means the closeness of the measurement made by a CEMS or by one of its component parts to the reference value of the emissions or volumetric flow being measured, expressed as the difference between the measurement and the reference value.

Monitor operating hour means any unit operating hour or portion thereof over which a CEMS, or other monitoring system approved by the Administrator under part 75 of this chapter is operating, regardless of the number of measurements (i.e., data points) collected during the hour or portion of an hour.

[Amended at 60 FR 26513, May 17, 1995]

Most stringent federally enforceable emissions limitation means the most stringent emissions limitation for a given pollutant applicable to the unit, which has been approved by the Administrator under the Act, whether in a State implementation plan approved pursuant to title I of the Act, a new source performance standard, or otherwise. To determine the most stringent emissions limitation for sulfur dioxide, each limitation shall be converted to lbs/mmBtu, using the appropriate conversion factors in appendix B of this part; *provided* that for determining the most stringent emissions limitation for sulfur dioxide for 1985, each limitation shall also be annualized, using the appropriate annualization factors in appendix A of this part.

Multi-header generator means a generator served by ductwork from more than one unit.

Multi-header unit means a unit with ductwork serving more than one generator.

Nameplate capacity means the maximum electrical generating output (expressed in MWe) that a generator can sustain over a specified period of time when not restricted by seasonal or other deratings, as listed in the NADB under the data field "NAMECAP" if the generator is listed in the NADB or as measured in accordance with the United States Department of Energy standards if the generator is not listed in the NADB.

National Allowance Data Base or *NADB* means the data base established by the Administrator under section 402(4)(C) of the Act.

Natural gas means a naturally occurring fluid mixture of hydrocarbons (e.g., methane, ethane,

Copyright 1993-1997, The Bureau of National Affairs, Inc.

gases, or exhaust from other sources.

Hour before and after means, for purposes of the missing data substitution procedures of part 75 of this chapter, the quality-assured hourly SO_2 or CO_2 concentration, hourly flow rate, or hourly NO_X emission rate recorded by a certified monitor during the unit operating hour immediately before and the unit operating hour immediately after a missing data period.

[Added at 60 FR 26513, May 17, 1995]

Hybrid generation facility means a plant that generates electrical energy derived from a combination of qualified renewable energy (wind, solar, biomass, or geothermal) and one or more other energy resources.

Independent auditor means a professional engineer who is not an employee or agent of the source being audited.

Independent Power Production Facility (IPP) means a source that:

(1) Is nonrecourse project financed, as defined by the Secretary of Energy at 10 CFR part 715

(2) Is used for the generation of electricity, eighty percent or more of which is sold at wholesale; and

(3) Is a new unit required to hold allowances under Title IV of the Clean Air Act; but only if direct public utility ownership of the equipment comprising the facility does not exceed 50 percent.

[Added at 58 FR 15647, March 23, 1993; corrected at 58 FR 33770, June 21, 1993]

Interested person means any person who submitted written comments or testified at a public hearing on the draft permit or other matter subject to notice and comment under the Acid Rain Program or any person who submitted his or her name to the Administrator or the permitting authority, as appropriate, to be placed on a list of persons interested in such matter. The Administrator or the permitting authority may update the list of interested persons from time to time by requesting additional written indication of continued interest from the persons listed and may delete from the list the name of any person failing to respond as requested.

Investor-owned utility means a utility that is organized as a tax-paying for-profit business.

Kilowatthour saved or *savings* means the net savings in electricity use (expressed in Kwh) that result directly from a utility's energy conservation measures or programs.

Least-cost plan or *least-cost planning process* means an energy conservation and electric power planning methodology meeting the requirements of §73.82(a)(4) of this chapter.

Life-of-the-unit, firm power contractual arrangement means a unit participation power sales agreement under which a utility or industrial customer reserves, or is entitled to receive, a specified amount or percentage of nameplate capacity and associated energy generated by any specified generating unit and pays its proportional amount of such unit's total costs, pursuant to a contract:

(1) For the life of the unit;

(2) For a cumulative term of no less than 30 years, including contracts that permit an election for early termination; or

(3) For a period equal to or greater than 25 years or 70 percent of the economic useful life of

Copyright 1993-1997, The Bureau of National Affairs, Inc.

(i) Natural gas or other gaseous fuel (including coal-derived gaseous fuel), for at least 90.0 percent of the unit's average annual heat input during the previous three calendar years and for at least 85.0 percent of the annual heat input in each of those calendar years; and

(ii) Any fuel other than coal or coal- derived fuel (other than coal-derived gaseous fuel) for the remaining heat input, if any; *provided* that for purposes of part 75 of this chapter, any fuel used other than natural gas, shall be limited to:

(A) Gaseous fuels containing no more sulfur than natural gas; or

(B) Fuel oil.

(2) For purposes of part 75 of this chapter, a unit may initially qualify as gas- fired under the following circumstances:

(i) If the designated representative provides fuel usage data for the unit for the three calendar years immediately prior to submission of the monitoring plan, and if the unit's fuel usage is projected to change on or before January 1, 1995, the designated representative submits a demonstration satisfactory to the Administrator that the unit will qualify as gas-fired under the first sentence of this definition using the years 1995 through 1997 as the three calendar year period; or

(ii) If a unit does not have fuel usage data for one or more of the three calendar years immediately prior to submission of the monitoring plan, the designated representative submits:

(A) The unit's designed fuel usage;

(B) Any fuel usage data, beginning with the unit's first calendar year of commercial operation following 1992;

(C) The unit's projected fuel usage for any remaining future period needed to provide fuel usage data for three consecutive calendar years; and

(D) Demonstration satisfactory to the Administrator that the unit will qualify as gas-fired under the first sentence of this definition using those three consecutive calendar years as the three calendar year period.

[Amended at 60 FR 26513, May 17, 1995]

General account means an Allowance Tracking System account that is not a unit account.

Generator means a device that produces electricity and was or would have been required to be reported as a generating unit pursuant to the United States Department of Energy Form 860 (1990 edition).

Generator Output capacity means the full-load continuous rating of a generator under specific conditions as designed by the manufacturer.

[Added at 58 FR 15647, March 23, 1993]

Hearing clerk means an EPA employee designated by the Administrator to establish a repository for all books, records, documents, and other materials relating to proceedings under part 78 of this chapter.

Heat input means the product (expressed in mmBtu/time) of the gross calorific value of the fuel (expressed in Btu/lb) and the fuel feed rate into the combustion device (expressed in mass of fuel/time) and does not include the heat derived from preheated combustion air, recirculated flue

Copyright 1993-1997, The Bureau of National Affairs, Inc.

document, information, or correspondence.

Flow meter accuracy means the closeness of the measurement made by a flow meter to the reference value of the fuel flow being measured, expressed as the difference between the measurement and the reference value.

Flow monitor means a component of the continuous emission monitoring system that measures the volumetric flow of exhaust gas.

Flue means a conduit or duct through which gases or other matter are exhausted to the atmosphere.

Flue gas desulfurization system means a type of add-on emission control used to remove sulfur dioxide from flue gas, commonly referred to as a "scrubber."

[Added at 60 FR 26513, May 17, 1995]

Forced outage means the removal of a unit from service due to an unplanned component failure or other unplanned condition that requires such removal immediately or within 7 days from the onset of the unplanned component failure or condition. For purposes of §§72.43 , 72.43 , and 72.92 , "forced outage" also includes a partial reduction in the heat input or electrical output due to an unplanned component failure or other unplanned condition that requires such reduction immediately or within 7 days from the onset of the unplanned component failure or condition.

Fossil fuel means natural gas, petroleum, coal, or any form of solid, liquid, or gaseous fuel derived from such material.

Fossil fuel-fired means the combustion of fossil fuel or any derivative of fossil fuel, alone or in combination with any other fuel, independent of the percentage of fossil fuel consumed in any calendar year (expressed in mmBtu).

Fuel oil means any petroleum-based fuel (including diesel fuel or petroleum derivatives such as oil tar) as defined by the American Society for Testing and Materials in ASTM D396-90a, "Standard Specification for Fuel Oils" (incorporated by reference in §72.13), and any recycled or blended petroleum products or petroleum by-products used as a fuel whether in a liquid, solid or gaseous state; *provided* that for purposes of the monitoring requirements of part 75 of this chapter, "fuel oil" shall be limited to the petroleum- based fuels for which applicable ASTM methods are specified in Appendices D, E, or F of part 75 of this chapter.

Fuel supply agreement means a legally binding agreement between a new IPP or a firm associated with a new IPP and a fuel supplier that establishes the terms and conditions under which the fuel supplier commits to provide fuel to be delivered to the new IPP.

Future year subaccount means a subaccount in an Allowance Tracking System account, established by the Administrator pursuant to §73.31 of this chapter, in which allowances are held for one of the 30 years following the later of 1995 or a current calendar year following 1995.

Gaseous fuel means a material that is in the gaseous state at standard atmospheric temperature and pressure conditions and that is combusted to produce heat.

[Added at 60 FR 26513, May 17, 1995]

Gas-fired means:

(1) The combustion of:

Copyright 1993-1997, The Bureau of National Affairs, Inc.

designated by the Administrator to investigate, litigate, and present evidence, arguments, and positions of EPA in any evidentiary hearing under part 78 of this chapter. Any EPA or permitting authority employee, consultant, or contractor who is called as a witness in the evidentiary hearing by EPA trial staff shall be deemed to be "EPA trial staff".

Equivalent diameter means a value, calculated using the equation in paragraph 2.1 of Method 1 in part 60, Appendix A of this chapter, and used to determine the upstream and downstream distances for locating CEMS or CEMS components in flues or stacks with rectangular cross sections.

Excepted monitoring system means a monitoring system that follows the procedures and requirements of appendix D or E of part 75 of this chapter for approved exceptions to the use of continuous emission monitoring systems.

[Added at 60 FR 26513, May 17, 1995]

Existing unit means a unit (including a unit subject to section 111 of the Act) that commenced commercial operation before November 15, 1990 and that on or after November 15, 1990 served a generator with a nameplate capacity of greater than 25 MWe. "Existing unit" does not include simple combustion turbines or any unit that on November 15, 1990 served only generators with a nameplate capacity of 25 MWe or less. Any "existing unit" that is modified, reconstructed, or repowered after November 15, 1990 shall continue to be an "existing unit."

[Amended at 58 FR 15647, March 23, 1993]

Ex parte communication means any communication, written or oral, relating to the merits of an adjudicatory proceeding under part 78 of this chapter, that was not originally included or stated in the administrative record, in a pleading, or in an evidentiary hearing or oral argument under part 78 of this chapter, between the decisional body and any interested person outside EPA or any EPA trial staff. Ex parte communication shall not include:

(1) Communication between EPA employees other than between EPA trial staff and a member of the decisional body; or

(2) Communication between the decisional body and interested persons outside the Agency, or EPA trial staff, where all parties to the proceeding have received prior written notice of the proposed communication and are given an opportunity to be present and to participate therein.

Excess emissions means:

(1) Any tonnage of sulfur dioxide emitted by an affected unit during a calendar year that exceeds the Acid Rain emissions limitation for sulfur dioxide for the unit; and

(2) Any tonnage of nitrogen oxide emitted by an affected unit during a calendar year that exceeds the annual tonnage equivalent of the Acid Rain emissions limitation for nitrogen oxides applicable to the affected unit taking into account the unit's heat input for the year.

Facility means any institutional, commercial, or industrial structure, installation, plant, source, or building.

File means to send or transmit a document, information, or correspondence to the official custody of the person specified to take possession in accordance with the applicable regulation. Compliance with any "filing" deadline shall be determined by the date that person receives the

Copyright 1993-1997, The Bureau of National Affairs, Inc.

Direct Sale Subaccount means a subaccount in the Special Allowance Reserve, as specified in section 416(b) of the Act, which contains Phase II allowances to be sold in the amount of 25,000 per year, from calendar year 1993 to 1999, inclusive, and of 50,000 per year for each year beginning in calendar year 2000, subject to the adjustments noted in the regulations at part 73, subpart E of this chapter.

Dispatch means the assignment within a dispatch system of generating levels to specific units and generators to effect the reliable and economical supply of electricity, as customer demand rises or falls, and includes:

(1) The operation of high-voltage lines, substations, and related equipment; and

(2) The scheduling of generation for the purpose of supplying electricity to other utilities over interconnecting transmission lines.

Dispatch system means either:

(1) A specified unit and generator or specified group of units, and portions of units, and generators that are interconnected and centrally dispatched, *provided* that the requirements of §72.33 are met; or

(2) In the event the requirements specified in paragraph (1) of this definition are not met, the unit and generator or group of units and generators that make up one utility system.

Draft Acid Rain permit or draft permit means the version of the Acid Rain permit , or the Acid Rain portion of an operating permit, that a permitting authority offers for public comment.

Dual-fuel reciprocating engine unit means an internal combustion engine that combusts any combination of natural gas and diesel fuel and that thereby generates electricity through the operation of pistons, rather than by heating steam or water.

Emergency fuel means either:

(1) For purposes of the requirements for a fuel flowmeter used in an excepted monitoring system under appendix D or E of part 75 of this chapter, the fuel identified by the designated representative in the unit's monitoring plan as the fuel which is combusted only during emergencies where the primary fuel is not available; or

(2) For purposes of the requirement for stack testing for an excepted monitoring system under appendix E of part 75 of this chapter, the fuel identified in the State, local, or Federal permit for a plant and is identified by the designated representative in the unit's monitoring plan as the fuel which is combusted only during emergencies where the primary fuel is not available, as established in a petition under §75.66 of this chapter.

[Added at 60 FR 26513, May 17, 1995]

Emissions means air pollutants exhausted from a unit or source into the atmosphere, as measured, recorded, and reported to the Administrator by the designated representative and as determined by the Administrator, in accordance with the emissions monitoring requirements of part 75 of this chapter.

Environmental Appeals Board means the three-member board established pursuant to §1.25(e) of this chapter and authorized to hear appeals pursuant to part 78 of this chapter.

EPA means the United States Environmental Protection Agency.

EPA trial staff means an employee of EPA, whether temporary or permanent, who has been

Copyright 1993-1997, The Bureau of National Affairs, Inc.

gases. "Demand-side measure" includes the measures listed in part 73, Appendix A, section 1 of this chapter.

Designated representative means a responsible natural person authorized by the owners and operators of an affected source and of all affected units at the source or by the owners and operators of a combustion source or process source, as evidenced by a certificate of representation submitted in accordance with subpart B of this part, to represent and legally bind each owner and operator, as a matter of federal law, in matters pertaining to the Acid Rain Program. Whenever the term "responsible official" is used in part 70 of this chapter, in any other regulations implementing title V of the Act, or in a State operating permit program, it shall be deemed to refer to the "designated representative" with regard to all matters under the Acid Rain Program.

[Revised at 60 FR 17111, April 4, 1995]

Desulfurization refers to various procedures whereby sulfur is removed from petroleum during or apart from the refining process. "Desulfurization" does not include such processes as dilution or blending of low sulfur content diesel fuel with high sulfur content diesel fuel from a diesel refinery not eligible under 40 CFR part 73, subpart G.

[Added at 58 FR 15647, March 23, 1993]

Diesel-fired unit means, for the purposes of part 75 of this chapter, an oil- fired unit that combusts diesel fuel as its fuel oil, where the supplementary fuel, if any, shall be limited to natural gas or gaseous fuels containing no more sulfur than natural gas.

[Added at 60 FR 26513, May 17, 1995]

Diesel fuel means a low sulfur fuel oil of grades 1-D or 2-D, as defined by the American Society for Testing and Materials standard ASTM D975-91, "Standard Specification for Diesel Fuel Oils," grades 1-GT or 2-GT, as defined by ASTM D2880-90a, "Standard Specification for Gas Turbine Fuel Oils," or grades 1 or 2, as defined by ASTM D396-90, "Standard Specification for Fuel Oils" (incorporated by reference in § 72.13).

[Amended at 60 FR 26513, May 17, 1995]

Diesel reciprocating engine unit means an internal combustion engine that combusts only diesel fuel and that thereby generates electricity through the operation of pistons, rather than by heating steam or water.

Diluent gas means a major gaseous constituent in a gaseous pollutant mixture, which in the case of emissions from fossil fuel-fired units are carbon dioxide and oxygen.

Diluent gas monitor means that component of the continuous emission monitoring system that measures the diluent gas concentration in a unit's flue gas.

Direct public utility ownership means direct ownership of equipment and facilities by one or more corporations, the principal business of which is sale of electricity to the public at retail. Percentage ownership of such equipment and facilities shall be measured on the basis of book value.

[Added at 58 FR 15647, March 23, 1993]

Copyright 1993-1997, The Bureau of National Affairs, Inc.

(1990)" is 124.6 (with 1982-1984=100). Beginning in the month for which a new reference base is established, "CPI (1990)" will be the CPI value for August 1989 on the new reference base.

(2) *CPI (year)* means the CPI for all urban consumers for the month of August of the previous year.

Continuous emission monitoring system or CEMS means the equipment required by part 75 of this chapter used to sample, analyze, measure, and provide, by readings taken at least once every 15 minutes, a permanent record of emissions, expressed in pounds per hour (lb/hr) for sulfur dioxide and in pounds per million British thermal units (lb/mmBtu) for nitrogen oxides. The following systems are component parts included in a continuous emission monitoring system:

(1) Sulfur dioxide pollutant concentration monitor;

(2) Flow monitor;

(3) Nitrogen oxides pollutant concentration monitors;

(4) Diluent gas monitor (oxygen or carbon dioxide);

(5) A continuous moisture monitor when such monitoring is required by part 75 of this chapter; and

(6) A data acquisition and handling system.

Continuous opacity monitoring system or COMS means the equipment required by part 75 of this chapter to sample, measure, analyze, and provide, with readings taken at least once every 6 minutes, a permanent record of opacity or transmittance. The following systems are component parts included in a continuous opacity monitoring system:

(1) Opacity monitor; and

(2) A data acquisition and handling system.

Control unit means a unit employing a qualifying Phase I technology in accordance with a Phase I extension plan under §72.42 .

Current year subaccount means the subaccount in an Allowance Tracking System general account, established pursuant to §73.31(c) of this chapter, in which are held allowances that may be transferred to a unit's compliance subaccount for use by the unit for the purpose of meeting its Acid Rain sulfur dioxide emissions limitation.

Customer means a purchaser of electricity not for purposes of transmission or resale.

Decisional body means any EPA employee who is or may reasonably be expected to act in a decision-making role in a proceeding under part 78 of this chapter, including the Administrator, a member of the Environmental Appeals Board, and a Presiding Officer, and any staff of any such person who are participating in the decisional process.

Demand-side measure means a measure:

(1) To improve the efficiency of consumption of electricity from a utility by customers of the utility; or

(2) To reduce the amount of consumption of electricity from a utility by customers of the utility without increasing the use by the customer of fuel other than: Biomass (i.e., combustible energy-producing materials from biological sources, which include wood, plant residues, biological wastes, landfill gas, energy crops, and eligible components of municipal solid waste), solar, geothermal, or wind resources; or industrial waste gases where the party making the submission involved certifies that there is no net increase in sulfur dioxide emissions from the use of such

Copyright 1993-1997, The Bureau of National Affairs, Inc.

including start-up of an emissions control technology or emissions monitor or of a unit's combustion chamber.

Common stack means the exhaust of emissions from two or more units through a single flue.

Compensating unit means an affected unit that is not otherwise subject to Acid Rain emissions limitation or Acid Rain emissions reduction requirements during Phase I and that is designated as a Phase I unit in a reduced utilization plan under §72.43 ; provided that an opt-in source shall not be a compensating unit.

[Revised at 60 FR 17111, April 4, 1995]

Compliance certification means a submission to the Administrator or permitting authority, as appropriate, that is required by this part, by part 73, 74, 75, 76, 77, or 78 of this chapter, to report an affected source or an affected unit's compliance or non-compliance with a provision of the Acid Rain Program and that is signed and verified by the designated representative in accordance with subparts B and I of this part and the Acid Rain Program regulations generally.

[Revised at 60 FR 17111, April 4, 1995]

Compliance plan, for the purposes of the Acid Rain Program, means the document submitted for an affected source in accordance with subpart C of this part or subpart E of part 74 of this chapter, or part 76 of this chapter, specifying the method(s) (including one or more Acid Rain compliance options as provided under subpart D of this part or subpart E of part 74 of this chapter, or part 76 of this chapter by which each affected unit at the source will meet the applicable Acid Rain emissions limitation and Acid Rain emissions reduction requirements.

[Revised at 60 FR 17111, April 4, 1995]

Compliance subaccount means the subaccount in an affected unit's Allowance Tracking System account, established pursuant to §73.31(a) or (b) of this chapter, in which are held, from the date that allowances for the current calendar year are recorded under §73.34(a) until December 31, allowances available for use by the unit in the current calendar year and, after December 31 until the date that deductions are made under §73.35(b), allowances available for use by the unit in the preceding calendar year, for the purpose of meeting the unit's Acid Rain emissions limitation for sulfur dioxide.

Compliance use date means the first calendar year for which an allowance may be used for purposes of meeting a unit's Acid Rain emissions limitation for sulfur dioxide.

Conservation Verification Protocol means a methodology developed by the Administrator for calculating the kilowatt hour savings from energy conservation measures and improved unit efficiency measures for the purposes of title IV of the Act.

Construction means fabrication, erection, or installation of a unit or any portion of a unit.

Consumer Price Index or CPI means, for purposes of the Acid Rain Program, the U.S. Department of Labor, Bureau of Labor Statistics unadjusted Consumer Price Index for All Urban Consumers for the U.S. city average, for All Items on the latest reference base, or if such index is no longer published, such other index as the Administrator in his or her discretion determines meets the requirements of the Clean Air Act Amendments of 1990.

(1) *CPI (1990)* means the CPI for all urban consumers for the month of August 1989. The "CPI

Copyright 1993-1997, The Bureau of National Affairs, Inc.

identified affected sources authorized to represent the owners and operators of such source(s) and of the affected units at such source(s) with regard to matters under the Acid Rain Program.

Certifying official, for purposes of part 73 of this chapter, means:

(1) For a corporation, a president, secretary, treasurer, or vice-president of the corporation in charge of a principal business function, or any other person who performs similar policy or decision-making functions for the corporation;

(2) For partnership or sole proprietorship, a general partner or the proprietor, respectively; and

(3) For a local government entity or State, federal, or other public agency, either a principal executive officer or ranking elected official.

Coal means all solid fuels classified as anthracite, bituminous, subbituminous, or lignite by the American Society for Testing and Materials Designation ASTM D388-92 "Standard Classification of Coals by Rank" (as incorporated by reference in §72.13).

Coal-derived fuel means any fuel, whether in a solid, liquid, or gaseous state, produced by the mechanical, thermal, or chemical processing of coal (e.g., pulverized coal, coal refuse, liquified or gasified coal, washed coal, chemically cleaned coal, coal-oil mixtures, and coke).

Coal-fired means the combustion of fuel consisting of coal or any coal-derived fuel (except a coal-derived gaseous fuel with a sulfur content no greater than natural gas), alone or in combination with any other fuel, where:

(1) For purposes of the requirements of part 75 of this chapter, a unit is "coal- fired" independent of the percentage of coal or coal-derived fuel consumed in any calendar year (expressed in mmBtu); and

(2) For all other purposes under the Acid Rain Program (including for calculating allowance allocations pursuant to part 73 of this chapter and applicability of the requirements of section 407 of the Act), a unit is "coal-fired" if it uses coal or coal-derived fuel as its primary fuel (expressed in mmBtu); *provided* that, if the unit is listed in the NADB, the primary fuel is the fuel listed in the NADB under the data field "PRIMFUEL".

[Corrected at 58 FR 40746, July 30, 1993]

Cogeneration unit means a unit that has equipment used to produce electric energy and forms of useful thermal energy (such as heat or steam) for industrial, commercial, heating or cooling purposes, through the sequential use of energy.

Combustion source means a stationary fossil fuel fired boiler, turbine, or internal combustion engine that has submitted or intends to submit an opt-in permit application under §74.14 of this chapter to enter the Opt-in Program.

[Added at 60 FR 17111, April 4, 1995]

Commence commercial operation means to have begun to generate electricity for sale, including the sale of test generation.

Commence construction means that an owner or operator has either undertaken a continuous program of construction or has entered into a contractual obligation to undertake and complete, within a reasonable time, a continuous program of construction.

Commence operation means to have begun any mechanical, chemical, or electronic process,

Copyright 1993-1997, The Bureau of National Affairs, Inc.

Administrator pursuant to section 403 and section 405 (b)(1), (3), and (4) ; (c)(1), (2), (3), and (5) ; (d)(1), (2) , (4), and (5); (e); (f); (g)(1), (2), (3), (4), and (5); (h)(1); (h)(3), (i); and (j).

Bias means systematic error, resulting in measurements that will be either consistently low or high relative to the reference value.

Boiler means an enclosed fossil or other fuel-fired combustion device used to produce heat and to transfer heat to recirculating water, steam, or any other medium.

Bypass operating quarter means a calendar quarter during which emissions pass through a stack, duct or flue that bypasses add-on emission controls.

[Added at 60 FR 26513, May 17, 1995]

By-pass stack means any duct, stack, or conduit through which emissions from an affected unit may or do pass to the atmosphere, which either augments or substitutes for the principal stack exhaust system or ductwork during any portion of the unit's operation.

Calibration error means the difference between:

(1) The response of gaseous monitor to a calibration gas and the known concentration of the calibration gas;

(2) The response of a flow monitor to a reference signal and the known value of the reference signal; or

(3) The response of a continuous opacity monitoring system to an attenuation filter and the known value of the filter after a stated period of operation during which no unscheduled maintenance, repair, or adjustment took place.

Calibration gas means: (1) a standard reference material; (2) a NIST traceable reference material; (3) a Protocol 1 gas; (4) a research gas material; or (5) zero air material.

[Corrected at 58 FR 40746, July 30, 1993; amended at 60 FR 26513, May 17, 1995]

Capacity factor means either: (1) the ratio of a unit's actual annual electric output (expressed in MWe-hr) to the unit's nameplate capacity times 8760 hours, or (2) the ratio of a unit's annual heat input (in million British thermal units or equivalent units of measure) to the unit's maximum design heat input (in million British thermal units per hour or equivalent units of measure) times 8,760 hours.

[Amended at 60 FR 26513, May 17, 1995]

CEMS precision or precision as applied to the monitoring requirements of part 75 of this chapter, means the closeness of a measurement to the actual measured value expressed as the uncertainty associated with repeated measurements of the same sample or of different samples from the same process (e.g., the random error associated with simultaneous measurements of a process made by more than one instrument). A measurement technique is determined to have increasing "precision" as the variation among the repeated measurements decreases.

Centroidal area means a representational concentric area that is geometrically similar to the stack or duct cross section, and is not greater than 1 percent of the stack or duct cross-sectional area.

Certificate of representation means the completed and signed submission required by §72.20 , for certifying the appointment of a designated representative for an affected source or a group of

Copyright 1993-1997, The Bureau of National Affairs, Inc.

73, subpart E of this chapter.

Authorized account representative means a responsible natural person who is authorized, in accordance with part 73 of this chapter, to transfer and otherwise dispose of allowances held in an Allowance Tracking System general account; or, in the case of a unit account, the designated representative of the owners and operators of the affected unit.

Automated data acquisition and handling system means that component of the CEMS, COMS, or other emissions monitoring system approved by the Administrator for use in the Acid Rain Program, designed to interpret and convert individual output signals from pollutant concentration monitors, flow monitors, diluent gas monitors, opacity monitors, and other component parts of the monitoring system to produce a continuous record of the measured parameters in the measurement units required by part 75 of this chapter.

Award means the conditional set-aside by the Administrator, based on the submission of an early ranking application pursuant to subpart D of this part, of an allowance from the Phase I extension reserve, for possible future allocation to a Phase I extension applicant's Allowance Tracking System unit account.

Backup fuel means a fuel for a unit where: (1) For purposes of the requirements of the monitoring exception of appendix E of part 75 of this chapter, the fuel provides less than 10.0 percent of the heat input to a unit during the three calendar years prior to certification testing for the primary fuel and the fuel provides less than 15.0 percent of the heat input to a unit in each of those three calendar years; or the Administrator approves the fuel as a backup fuel; and (2) For all other purposes under the Acid Rain Program, a fuel that is not the primary fuel (expressed in mmBtu) consumed by an affected unit for the applicable calendar year.

[Added at 60 FR 26513, May 17, 1995]

Baseline means the annual average quantity of fossil fuel consumed by a unit, measured in millions of British Thermal Units (expressed in mmBtu) for calendar years 1985 through 1987; *provided* that in the event that a unit is listed in the NADB, the baseline will be calculated for each unit-generator pair that includes the unit, and the unit's baseline will be the sum of such unit-generator baselines. The unit-generator baseline will be as provided in the NADB under the data field "BASE8587", as adjusted by the outage hours listed in the NADB under the data field "OUTAGEHR" in accordance with the following equation:

$$\text{Baseline} = \text{BASE8587} \times \{26280/(26280-\text{OUTAGEHR})\} \times \{36/(36 - \text{months not on line})\} \times 10^6$$

"Months not on line" is the number of months during January 1985 through December 1987 prior to the commencement of firing for units that commenced firing in that period, i.e., the number of months, in that period, prior to the on-line month listed under the data field "BLRMNONL" and the on-line year listed in the data field "BLRYRONL" in the NADB.

Basic Phase II allowance allocations means:

(1) For calendar years 2000 through 2009 inclusive, allocations of allowances made by the Administrator pursuant to section 403 and section 405 (b)(1), (3), and (4); (c)(1) , (2), (3), and (5); (d)(1), (2), (4), and (5); (e); (f); (g)(1), (2), (3), (4), and (5); ; (h)(1); (i); and (j).

(2) For each calendar year beginning in 2010, allocations of allowances made by the

Copyright 1993-1997, The Bureau of National Affairs, Inc.

be the rate specified by the Administrator in the NADB under the data field "1985 annualized boiler SO_2 emission limit."

[Revised at 60 FR 17111, April 4, 1995]

Allowance means an authorization by the Administrator under the Acid Rain Program to emit up to one ton of sulfur dioxide during or after a specified calendar year.

Allowance deduction, or deduct when referring to allowances, means the permanent withdrawal of allowances by the Administrator from an Allowance Tracking System compliance subaccount, or future year subaccount, to account for the number of tons of SO_2 emissions from an affected unit for the calendar year, for tonnage emissions estimates calculated for periods of missing data as provided in part 75 of this chapter, or for any other allowance surrender obligations of the Acid Rain Program.

[Revised at 60 FR 17111, April 4, 1995]

Allowances held or hold allowances means the allowances recorded by the Administrator, or submitted to the Administrator for recordation in accordance with §73.50 of this chapter, in an Allowance Tracking System account.

Allowance reserve means any bank of allowances established by the Administrator in the Allowance Tracking System pursuant to sections 404(a)(2) (Phase I extension reserve), 404(g) (energy conservation and renewable energy reserve), or 416(b) (special allowance reserve) of the Act, and implemented in accordance with part 73, subpart B of this chapter.

Allowance Tracking or ATS means the Acid Rain Program system by which the Administrator allocates, records, deducts, and tracks allowances.

Allowance Tracking System account means an account in the Allowance Tracking System established by the Administrator for purposes of allocating, holding, transferring, and using allowances.

Allowance transfer deadline means midnight of January 30 or, if January 30 is not a business day, midnight of the first business day thereafter and is the deadline by which allowances may be submitted for recordation in an affected unit's compliance subaccount for the purposes of meeting the unit's Acid Rain emissions limitation requirements for sulfur dioxide for the previous calendar year.

Alternative monitoring system means a system or a component of a system designed to provide direct or indirect data of mass emissions per time period, pollutant concentrations, or volumetric flow, that is demonstrated to the Administrator as having the same precision, reliability, accessibility, and timeliness as the data provided by a certified CEMS or certified CEMS component in accordance with part 75 of this chapter.

As-fired means the taking of a fuel sample just prior to its introduction into the unit for combustion.

Auction subaccount means a subaccount in the Special Allowance Reserve, as specified in section 416(b) of the Act, which contains allowances to be sold at auction in the amount of 150,000 per year from calendar year 1995 through 1999, inclusive, and 200,000 per year for each year begnning in calendar year 2000, subject to the adjustments noted in the regulations in part

Copyright 1993-1997, The Bureau of National Affairs, Inc.

Acid Rain permit or permit means the legally binding written document, or portion of such document, issued by a permitting authority under this part (following an opportunity for appeal pursuant to part 78 of this chapter or any State administrative appeals procedure), including any permit revisions, specifying the Acid Rain Program requirements applicable to an affected source, to each affected unit at an affected source, and to the owners and operators and the designated representative of the affected source or the affected unit.

Acid Rain Program means the national sulfur dioxide and nitrogen oxides air pollution control and emissions reduction program established in accordance with title IV of the Act, this part, and parts 73, 74, 75, 76 , 77, and 78 of this chapter.

[Revised at 60 FR 17111, April 4, 1995]

Act means the Clean Air Act, 42 U.S.C. §7401, et seq. as amended by Public Law No. 101-549 (November 15, 1990).

Actual SO_2 emissions rate means the annual average sulfur dioxide emissions rate for the unit (expressed in lb/mmBtu), for the specified calendar year; *provided* that, if the unit is listed in the NADB, the "1985 actual SO_2 emissions rate" for the unit shall be the rate specified by the Administrator in the NADB under the data field "SO2RTE."

Add-on control means a pollution reduction control technology that operates independent of the combustion process.

Additional advance auction means the auction of advance allowances that were offered the previous year for sale in an advance sale.

Administrator means the Administrator of the United States Environmental Protection Agency or the Administrator's duly authorized representative.

Advance allowance means an allowance that may be used for purposes of compliance with a unit's Acid Rain sulfur dioxide emissions limitation requirements beginning no earlier than seven years following the year in which the allowance is first offered for sale.

Advance auction means an auction of advance allowances.

Advance sale means a sale of advance allowances.

Affected source means a source that includes one or more affected units.

Affected unit means a unit that is subject to any Acid Rain emissions reduction requirement or Acid Rain emissions limitation under §72.6 or part 74 of this chapter.

[Revised at 60 FR 17111, April 4, 1995]

Affiliate shall have the meaning set forth in section 2(a)(11) of the Public Utility Holding Company Act of 1935, 15 U.S.C. 79b(a)(11), as of November 15, 1990.

Allocate or allocation means the initial crediting of an allowance by the Administrator to an Allowance Tracking System unit account or general account.

Allowable SO_2 emissions rate means the most stringent federally enforceable emissions limitation for sulfur dioxide (in lb/mmBtu) applicable to the unit or combustion source for the specified calendar year, or for such subsequent year as determined by the Administrator where such a limitation does not exist for the specified year; provided that, if a Phase I or Phase II unit is listed in the NADB, the "1985 allowable SO_2 emissions rate" for the Phase I or Phase II unit shall

Copyright 1993-1997, The Bureau of National Affairs, Inc.

approving and implementing State operating permit programs and for federal issuance of operating permits under title V , as such requirements apply to affected sources under the Acid Rain Program.

40 CFR 72.2 Definitions.

The terms used in this part, in parts 73 , 74, 75, 76, 77 and 78 of this chapter shall have the meanings set forth in the Act, including sections 302 and 402 of the Act, and in this section, as follows:

[§72.2 introductory text revised at 60 FR 17111, April 4, 1995]

Account number means the identification number given by the Administrator to each Allowance Tracking System account pursuant to §73.31(d) of this chapter.

Acid Rain compliance option means one of the methods of compliance used by an affected unit under the Acid Rain Program as described in a compliance plan submitted and approved in accordance with subpart D of this part, part 74 of this chapter or part 76 of this chapter.

[Revised at 60 FR 17111, April 4, 1995]

Acid Rain emissions limitation means:

(1) For the purposes of sulfur dioxide emissions:

(i) The tonnage equivalent of the allowances authorized to be allocated to an affected unit for use in a calendar year under section 404(a)(1) and (a)(3) of the Act, the basic Phase II allowance allocations authorized to be allocated to an affected unit for use in a calendar year, or the allowances authorized to be allocated to an opt-in source under section 410 of the Act for use in a calendar year;

(ii) As adjusted:

(A) By allowances allocated by the Administrator pursuant to section 403 , section 405 (a)(2), (a)(3), (b)(2), (c)(4) , (d)(3), and (h)(2), and section 406 of the Act;

(B) By allowances allocated by the Administrator pursuant to subpart Dof this part; and thereafter

(C) By allowance transfers to or from the compliance subaccount for that unit that were recorded or properly submitted for recordation by the allowance transfer deadline as provided in §73.35 of this chapter, after deductions and other adjustments are made pursuant to §73.34(c) of this chapter; and

(2) For purposes of nitrogen oxides emissions, the applicable limitation established by regulations promulgated by the Administrator pursuant to section 407 of the Act, as modified by an Acid Rain permit application submitted to the permitting authority, and an Acid Rain permit issued by the permitting authority, in accordance with regulations implementing section 407 of the Act.

[Revised at 60 FR 17111, April 4, 1995]

Acid Rain emissions reduction requirement means a requirement under the Acid Rain Program to reduce the emissions of sulfur dioxide or nitrogen oxides from a unit to a specified level or by a specified percentage.

Copyright 1993-1997, The Bureau of National Affairs, Inc.

CHAPTER I—ENVIRONMENTAL PROTECTION AGENCY

SUBCHAPTER C—AIR PROGRAMS

PART 74—SULFUR DIOXIDE OPT-INS

Proposed Regulation(s) Preamble(s) APC Analysis

HISTORY: 40 CFR 74; 60 FR 17114, Apr. 4, 1995

AUTHORITY:
42 U.S.C. 7601 and 7651 *et seq.*

Subpart A—Background and Summary

40 CFR 74.1 Purpose and scope.

The purpose of this part is to establish the requirements and procedures for:

(a) The election of a combustion or process source that emits sulfur dioxide to become an affected unit under the Acid Rain Program, pursuant to section 410 of title IV of the Clean Air Act, 42 U.S.C. 7401, *et seq.*, as amended by Public Law 101-549 (November 15, 1990); and

(b) Issuing and modifying operating permits; certifying monitors; and allocating, tracking, transferring, surrendering and deducting allowances for combustion or process sources electing to become affected units.

40 CFR 74.2 Applicability.

Combustion or process sources that are not affected units under §72.6 of this chapter and that are operating and are located in the 48 contiguous States or the District of Columbia may submit an opt- in permit application to become opt-in sources upon issuance of an opt-in permit . Units for which a written exemption under §72.7 or §72.8 of this chapter is in effect and combustion or process sources that are not operating are not eligible to submit an opt-in permit application to become opt-in sources.

40 CFR 74.3 Relationship to the Acid Rain program requirements.

(a) *General.*

Copyright 1993-1997, The Bureau of National Affairs, Inc.

(1) For purposes of applying parts 72,73, 75,77 and 78, each opt-in source shall be treated as an affected unit.

(2) Subpart A,B, G, and H of part 72 of this chapter, including §§72.2 (definitions), 72.3 (measurements, abbreviations, and acronyms), 72.4 (federal authority), 72.5 (State authority), 72.6 (applicability), 72.7 (New units exemption), 72.8 (Retired units exemption), 72.9 (Standard Requirements), 72.10 (availability of information), and 72.11 (computation of time), shall apply to this part.

(b) *Permits.* The permitting authority shall act in accordance with this part and parts 70 and 72 of this chapter in issuing or denying an opt-in permit and incorporating it into a combustion or process source's operating permit. To the extent that any requirements of this part, part 72, and part 78 of this chapter are inconsistent with the requirements of part 70 of this chapter, the requirements of this part, part 72, and part 78 of this chapter shall take precedence and shall govern the issuance, denials, revision, reopening, renewal, and appeal of the opt-in permit.

(c) *Appeals.* The procedures for appeals of decisions of the Administrator under this part are contained in part 78 of this chapter.

(d) *Allowances.* A combustion or process source that becomes an affected unit under this part shall be subject to all the requirements of subparts C and D of part 73 of this chapter.

(e) *Excess emissions.* A combustion or process source that becomes an affected unit under this part shall be subject to the requirements of part 77 of this chapter applicable to excess emissions of sulfur dioxide and shall not be subject to the requirements of part 77 of this chapter applicable to excess emissions of nitrogen oxides.

(f) *Monitoring.* A combustion or process source that becomes an affected unit under this part shall be subject to all the requirements of part 75, consistent with subparts F and G of this part.

40 CFR 74.4 Designated representative.

(a) The provisions of subpart B of part 72 of this chapter shall apply to the designated representative of an opt-in source .

(b) If a combustion or process source is located at the same source as one or more affected units, the combustion or process source shall have the same designated representative as the other affected units at the source.

Subpart B—Permitting Procedures

40 CFR 74.10 Roles—EPA and permitting authority.

(a) *Administrator responsibilities.* The Administrator shall be responsible for the following

Copyright 1993-1997, The Bureau of National Affairs, Inc.

activities under the opt- in provisions of the Acid Rain Program:

(1) *Calculating* the baseline or alternative baseline and allowance allocation, and allocating allowances for combustion or process sources that become affected units under this part;

(2) Certifying or recertifying monitoring systems for combustion or process sources as provided under §74.62;

(3) Establishing allowance accounts, tracking allowances, assessing end-of-year compliance, determining reduced utilization, approving thermal energy transfer and accounting for the replacement of thermal energy, closing accounts for opt- in sources that shut down, are reconstructed, become affected under §72.6 of this chapter, or fail to renew their opt-in permit, and deducting allowances as provided under subpart E of this part; and

(4) Ensuring that the opt-in source meets all withdrawal conditions prior to withdrawal from the Acid Rain Program as provided under §74.18; and

(5) Approving and disapproving the request to withdraw from the Acid Rain Program.

(b) *Permitting authority responsibilities.* The permitting authority shall be responsible for the following activities:

(1) Issuing the draft and final opt-in permit;

(2) Revising and renewing the opt-in permit; and

(3) Terminating the opt-in permit for an opt-in source as provided in §74.18 (withdrawal), §74.46 (shutdown, reconstruction or change in affected status) and § 74.50 (deducting allowances).

40 CFR 74.12 Opt-in permit contents.

(a) The opt-in permit shall be included in the Acid Rain permit.

(b) *Scope.* The opt-in permit provisions shall apply only to the opt-in source and not to any other affected units.

(c) *Contents.* Each opt-in permit , including any draft or proposed opt-in permit, shall contain the following elements in a format specified by the Administrator:

(1) All elements required for a complete opt-in permit application as provided under §74.16 for combustion sources or under §74.17 for process sources or, if applicable, all elements required for a complete opt-in permit renewal application as provided in §74.19 for combustion sources or under §74.17 for process sources;

(2) The allowance allocation for the opt-in source as determined by the Administrator under subpart C of this part for combustion sources or subpart D of this part for process sources;

Copyright 1993-1997, The Bureau of National Affairs, Inc.

(3) The standard permit requirements as provided under §72.9 of this chapter, except that the provisions in §72.9(d) of this chapter shall not be included in the opt-in permit; and

(4) *Termination.* The provision that participation of a combustion or process source in the Acid Rain Program may be terminated only in accordance with § 74.18 (withdrawal), §74.46 (shutdown, reconstruction, or change in affected status), and §74.50 (deducting allowances).

(d) Each opt-in permit is deemed to incorporate the definitions of terms under § 72.2 of this chapter.

(e) *Permit shield.* Each opt-in source operated in accordance with the opt-in permit that governs the opt-in source and that was issued in compliance with title IV of the Act, as provided in this part and parts 72, 73,75, 77, and 78 of this chapter, shall be deemed to be operating in compliance with the Acid Rain Program, except as provided in §72.9(g)(6) of this chapter.

(f) *Term of opt-in permit* . An opt-in permit shall be issued for a period of 5 years and may be renewed in accordance with §74.19; provided

(1) If an opt-in permit is issued prior to January 1, 2000, then the opt-in permit may, at the option of the permitting authority, expire on December 31, 1999; and

(2) If an affected unit with an Acid Rain permit is located at the same source as the combustion source, the combustion source's opt-in permit may, at the option of the permitting authority, expire on the same date as the affected unit's Acid Rain permit expires.

40 CFR 74.14 Opt-in permit process.

(a) *Submission.* The designated representative of a combustion or process source may submit an opt-in permit application and a monitoring plan to the Administrator at any time for any combustion or process source that is operating.

(b) *Issuance or denial of opt-in permits.* The permitting authority shall issue or deny opt-in permits or revisions of opt- in permits in accordance with the procedures in part 70 of this chapter and subparts F and G of part 72 of this chapter, except as provided in this section.

(1) *Supplemental information.* Regardless of whether the opt-in permit application is complete, the Administrator or the permitting authority may request submission of any additional information that the Administrator or the permitting authority determines to be necessary in order to review the opt-in permit application or to issue an opt-in permit .

(2) *Interim review of monitoring plan.* The Administrator will determine, on an interim basis, the sufficiency of the monitoring plan, accompanying the opt-in permit application . A monitoring plan is sufficient, for purposes of interim review, if the plan appears to contain information demonstrating that all SO_2 emissions, NO_x emissions, CO_2 emissions, and opacity of the combustion or process source are monitored and reported in accordance with part 75 of this

Copyright 1993-1997, The Bureau of National Affairs, Inc.

chapter. This interim review of sufficiency shall not be construed as the approval or disapproval of the combustion or process source's monitoring system.

(3) *Issuance of draft opt-in permit*. After the Administrator determines whether the combustion or process source's monitoring plan is sufficient under paragraph (b)(2) of this section, the permitting authority shall serve the draft opt-in permit or the denial of a draft permit or the draft opt-in permit revisions or the denial of draft opt-in permit revisions on the designated representative of the combustion or process source submitting an opt-in permit application. A draft permit or draft opt-in permit revision shall not be served or issued if the monitoring plan is determined not to be sufficient.

(4) *Confirmation by source of intention to opt-in.* Within 21 calendar days from the date of service of the draft opt-in permit or the denial of the draft opt-in permit, the designated representative of a combustion or process source submitting an opt-in permit application must submit to the Administrator, in writing, a confirmation or recision of the source's intention to become an opt-in source under this part. The Administrator shall treat the failure to make a timely submission as a recision of the source's intention to become an opt-in source and as a withdrawal of the opt-in permit application.

(5) *Issuance of draft opt-in permit*. If the designated representative confirms the combustion or process source's intention to opt in under paragraph (b)(4) of this section, the permitting authority will give notice of the draft opt-in permit or denial of the draft opt-in permit and an opportunity for public comment, as provided under §72.65 of this chapter with regard to a draft permit or denial of a draft permit if the Administrator is the permitting authority or as provided in accordance with part 70 of this chapter with regard to a draft permit or the denial of a draft permit if the State is the permitting authority.

(6) *Permit decision deadlines.*

(i) If the Administrator is the permitting authority, an opt-in permit will be issued or denied within 12 months of receipt of a complete opt-in permit application.

(ii) If the State is the permitting authority, an opt-in permit will be issued or denied within 18 months of receipt of a complete opt-in permit application or such lesser time approved under part 70 of this chapter.

(7) *Withdrawal of opt-in permit application.* A combustion or process source may withdraw its opt-in permit application at any time prior to the issuance of the final opt-in permit. Once a combustion or process source withdraws its application, in order to re-apply, it must submit a new opt-in permit application in accordance with §74.16 for combustion sources or §74.17 for process sources.

(d) *Entry into Acid Rain Program.—*

(1) *Effective date.* The effective date of the opt-in permit shall be the January 1, April 1, July 1,

Copyright 1993-1997, The Bureau of National Affairs, Inc.

or October 1 for a combustion or process source providing monthly data under §74.20, or January 1 for a combustion or process source providing annual data under §74.20, following the later of the issuance of the opt-in permit by the permitting authority or the completion of monitoring system certification, as provided in subpart F of this part for combustion sources or subpart G of this part for process sources. The combustion or process source shall become an opt-in source and an affected unit as of the effective date of the opt-in permit.

(2) *Allowance allocation.* After the opt-in permit becomes effective, the Administrator will allocate allowances to the opt-in source as provided in §74.40 . If the effective date of the opt-in permit is not January 1, allowances for the first year shall be pro-rated as provided in §74.28.

(e) *Expiration of opt-in permit* . An opt-in permit that is issued before the completion of monitoring system certification under subpart F of this part for combustion sources or under subpart G of this part for process sources shall expire 180 days after the permitting authority serves the opt-in permit on the designated representative of the combustion or process source governed by the opt-in permit , unless such monitoring system certification is complete. The designated representative may petition the Administrator to extend this time period in which an opt-in permit expires and must explain in the petition why such an extension should be granted. The designated representative of a combustion source governed by an expired opt-in permit and that seeks to become an opt-in source must submit a new opt-in permit application.

40 CFR 74.16 Application requirements for combustion sources.

(a) *Opt-in permit application* . Each complete opt-in permit application for a combustion source shall contain the following elements in a format prescribed by the Administrator:

(1) Identification of the combustion source, including company name, plant name, plant site address, mailing address, description of the combustion source, and information and diagrams on the combustion source's configuration;

(2) Identification of the designated representative, including name, address, telephone number, and facsimile number;

(3) The year and month the combustion source commenced operation;

(4) The number of hours the combustion source operated in the six months preceding the opt-in permit application and supporting documentation;

(5) The baseline or alternative baseline data under §74.20;

(6) The actual SO_2 emissions rate under §74.22;

(7) The allowable 1985 SO_2 emissions rate under §74.23;

(8) The current allowable SO_2 emissions rate under §74.24;

Copyright 1993-1997, The Bureau of National Affairs, Inc.

(9) The current promulgated SO_2 emissions rate under §74.25;

(10) If the combustion source seeks to qualify for a transfer of allowances from the replacement of thermal energy, a thermal energy plan as provided in §74.47 for combustion sources; and

(11) A statement whether the combustion source was previously an affected unit under this part;

(12) A statement that the combustion source is not an affected unit under §72.6 of this chapter;

(13) A complete compliance plan for SO_2 under §72.40 of this chapter; and

(14) The following statement signed by the designated representative of the combustion source: "I certify that the data submitted under subpart C of part 74 reflects actual operations of the combustion source and has not been adjusted in any way."

(b) *Accompanying documents.* The designated representative of the combustion source shall submit a monitoring plan in accordance with §74.61.

40 CFR 74.17 Application requirements for process sources [Reserved].

40 CFR 74.18 Withdrawal.

(a) *Withdrawal through administrative amendment.* An opt-in source may request to withdraw from the Acid Rain Program by submitting an administrative amendment under §72.83 of this chapter; provided that the amendment will be treated as received by the permitting authority upon issuance of the notification of the acceptance of the request to withdraw under paragraph (f)(1) of this section.

(b) *Requesting withdrawal.* To withdraw from the Acid Rain Program, the designated representative of an opt-in source shall submit to the Administrator and the permitting authority a request to withdraw effective January 1 of the year after the year in which the submission is made. The submission shall be made no later than December 1 of the calendar year preceding the effective date of withdrawal.

(c) *Conditions for withdrawal.* In order for an opt-in source to withdraw, the following conditions must be met:

(1) By no later than January 30 of the first calendar year in which the withdrawal is to be effective, the designated representative must submit to the Administrator an annual compliance certification report pursuant to §74.43.

(2) If the opt-in source has excess emissions in the calendar year before the year for which the withdrawal is to be in effect, the designated representative must submit an offset plan for excess

Copyright 1993-1997, The Bureau of National Affairs, Inc.

emissions, pursuant to part 77 of this chapter, that provides for immediate deduction of allowances.

(d) *Administrator's action on withdrawal.* After the opt-in source meets the requirements for withdrawal under paragraphs (b) and (c) of this section, the Administrator will deduct allowances required to be deducted under §73.35 of this chapter and part 77 of this chapter and allowances equal in number to and with the same or earlier compliance use date as those allocated under §74.40 for the first year for which the withdrawal is to be effective and all subsequent years. The Administrator will close the opt-in source's unit account and transfer any remaining allowances to a new general account as specified under §74.46(c).

(e) *Opt-in source's prior violations.* An opt-in source that withdraws from the Acid Rain Program shall comply with all requirements under the Acid Rain Program concerning all years for which the opt-in source was an affected unit, even if such requirements arise, or must be complied with after the withdrawal takes effect. The withdrawal shall not be a defense against any violation of such requirements of the Acid Rain Program whether the violation occurs before or after the withdrawal takes effect.

(f) *Notification.*

(1) After the requirements for withdrawal under paragraphs (b) and (c) of this section are met and after the Administrator's action on withdrawal under paragraph (d) of this section is complete, the Administrator will issue a notification to the permitting authority and the designated representative of the opt-in source of the acceptance of the opt-in source's request to withdraw.

(2) If the requirements for withdrawal under paragraphs (b) and (c) of this section are not met or the Administrator's action under paragraph (d) of this section cannot be completed, the Administrator will issue a notification to the permitting authority and the designated representative of the opt-in source that the opt-in source's request to withdraw is denied. If the opt-in source's request to withdraw is denied, the opt-in source shall remain in the Opt-in Program and shall remain subject to the requirements for opt-in sources contained in this part.

(g) *Permit amendment.*

(1) After the Administrator issues a notification under paragraph (f)(1) of this section that the requirements for withdrawal have been met (including the deduction of the full amount of allowances as required under paragraph (d) of this section), the permitting authority shall amend, in accordance with § §72.80 and 72.83 (administrative amendment) of this chapter, the opt-in source's Acid Rain permit to terminate the opt-in permit , not later than 60 days from the issuance of the notification under paragraph (f) of this section.

(2) The termination of the opt-in permit under paragraph (g)(1) of this section will be effective on January 1 of the year for which the withdrawal is requested. An opt-in source shall continue to be an affected unit until the effective date of the termination.

Copyright 1993-1997, The Bureau of National Affairs, Inc.

(h) *Reapplication upon failure to meet conditions of withdrawal.* If the Administrator denies the opt-in source's request to withdraw, the designated representative may submit another request to withdraw in accordance with paragraphs (b) and (c) of this section.

(i) *Ability to return to the Acid Rain Program.* Once a combustion or process source withdraws from the Acid Rain Program and its opt-in permit is terminated, a new opt-in permit application for the combustion or process source may not be submitted prior to the date that is four years after the date on which the opt-in permit became effective.

40 CFR 74.19 Revision and renewal of opt-in permit.

(a) The designated representative of an opt-in source may submit revisions to its opt-in permit in accordance with subpart H of part 72 of this chapter.

(b) The designated representative of an opt-in sourceM may renew its opt-in permit by meeting the following requirements:

(1) (i) In order to renew an opt-in permit if the Administrator is the permitting authority for the renewed permit, the designated representative of an opt-in source must submit to the Administrator an opt- in permit application at least 6 months prior to the expiration of an existing opt- in permit.

(ii) In order to renew an opt-in permit if the State is the permitting authority for the renewed permit, the designated representative of an opt-in source must submit to the permitting authority an opt-in permit application at least 18 months prior to the expiration of an existing opt-in permit or such shorter time as may be approved for operating permits under part 70 of this chapter.

(2) Each complete opt-in permit application submitted to renew an opt-in permit shall contain the following elements in a format prescribed by the Administrator:

(i) Elements contained in the opt-in source's initial opt-in permit application as specified under §74.16(a)(1), (2), (10) , (11), (12), and (13).

(ii) An updated monitoring plan, if applicable under §75.53(b) of this chapter.

(c) (1) Upon receipt of an opt-in permit application submitted to renew an opt-in permit, the permitting authority shall issue or deny an opt-in permit in accordance with the requirements under subpart B of this part, except as provided in paragraph (c)(2) of this section.

(2) When issuing a renewed opt-in permit , the permitting authority shall not alter an opt-in source's allowance allocation as established, under subpart B and subpart C of this part for combustion sources and under subpart B and subpart D of this part for process sources, in the opt-in permit that is being renewed.

Copyright 1993-1997, The Bureau of National Affairs, Inc.

Subpart C—Allowance Calculations for Combustion Sources

40 CFR 74.20 Data for baseline and alternative baseline.

(a) *Acceptable data.*

(1) The designated representative of a combustion source shall submit either the data specified in this paragraph or alternative data under paragraph (c) of this section. The designated representative shall also submit the calculations under this section based on such data.

(2) The following data shall be submitted for the combustion source for the calendar year(s) under paragraph (a)(3) of this section:

(i) Monthly or annual quantity of each type of fuel consumed, expressed in thousands of tons for coal, thousands of barrels for oil, and million standard cubic feet (scf) for natural gas. If other fuels are used, the combustion source must specify units of measure.

(ii) Monthly or annual heat content of fuel consumed for each type of fuel consumed, expressed in British thermal units (Btu) per pound for coal, Btu per barrel for oil, and Btu per standard cubic foot (scf) for natural gas. If other fuels are used, the combustion source must specify units of measure.

(iii) Monthly or annual sulfur content of fuel consumed for each type of fuel consumed, expressed as a percentage by weight.

(3) *Calendar Years.*

(i) For combustion sources that commenced operating prior to January 1, 1985, data under this section shall be submitted for 1985, 1986, and 1987.

(ii) For combustion sources that commenced operation after January 1, 1985, the data under this section shall be submitted for the first three consecutive calendar years during which the combustion source operated after December 31, 1985.

(b) *Calculation of baseline and alternative baseline.*

(1) For combustion sources that commenced operation prior to January 1, 1985, the baseline is the average annual quantity of fuel consumed during 1985, 1986, and 1987, expressed in mmBtu. The baseline shall be calculated as follows:

$$\text{baseline} = \frac{\sum_{\text{Year}=1985}^{1987} \text{annual fuel consumption}}{3}$$

Copyright 1993-1997, The Bureau of National Affairs, Inc.

where,

(i) for a combustion source submitting monthly data,

and unit conversion
= 2 for coal
= 0.001 for oil
= 1 for gas
For other fuels, the combustion source must specify unit conversion; or

(ii) for a combustion source submitting annual data,

and unit conversion
= 2 for coal
= 0.001 for oil
= 1 for gas
For other fuels, the combustion source must specify unit conversion.

(2) For combustion sources that commenced operation after January 1, 1985, the alternative baseline is the average annual quantity of fuel consumed in the first three consecutive calendar years during which the combustion source operated after December 31, 1985, expressed in mmBtu. The alternative baseline shall be calculated as follows:

where,
"annual fuel consumption" is as defined under paragraph (b)(1)(i) or (ii) of this section.

(c) *Alternative data.*

(1) For combustion sources for which any of the data under paragraph (b) of this section is not available due solely to a natural catastrophe, data as set forth in paragraph (a)(2) of this section for the first three consecutive calendar years for which data is available after December 31, 1985, may be submitted. The alternative baseline for these combustion sources shall be calculated using the equation for alternative baseline in paragraph (b)(2) of this section and the definition of annual fuel consumption in paragraphs (b)(1)(i) or (ii) of this section.

(2) Except as provided in paragraph (c)(1) of this section, no alternative data may be submitted. A combustion source that cannot submit all required data, in accordance with this section, shall not be eligible to submit an opt-in permit application.

(d) *Administrator's action.* The Administrator may accept in whole or in part or with changes

Copyright 1993-1997, The Bureau of National Affairs, Inc.

$$\text{annual fuel consumption} = \sum_{\text{Fuel Types}} \left[\begin{array}{c} \text{quantity of fuel consumed} \\ \times \text{ heat content } \times \text{ unit conversion} \end{array} \right]$$

$$\text{annual fuel consumption} = \sum_{\text{months}=\text{Jan}}^{\text{Dec}} \sum_{\text{Fuel Types}} \left[\begin{array}{c} \text{quantity of fuel consumed} \\ \times \text{ heat content} \times \text{ unit conversion} \end{array} \right]$$

$$\text{alternative baseline} = \frac{\sum_{\text{First 3 consecutive years}} \text{annual fuel consumption}}{3}$$

as appropriate, request additional information, or reject data or alternative data submitted for a combustion source's baseline or alternative baseline.

40 CFR 74.22 Actual SO_2 emissions rate.

(a) *Data requirements.* The designated representative of a combustion source shall submit the calculations under this section based on data submitted under § 74.20 for the following calendar year:

(1) For combustion sources that commenced operation prior to January 1, 1985, the calendar year for calculating the actual SO_2 emissions rate shall be 1985.

(2) For combustion sources that commenced operation after January 1, 1985, the calendar year for calculating the actual SO_2 emissions rate shall be the first year of the three consecutive calendar years of the alternative baseline under §74.20(b)(2).

(3) For combustion sources meeting the requirements of §74.20(c), the calendar year for calculating the actual SO_2 emissions rate shall be the first year of the three consecutive calendar years to be used as alternative data under §74.20(c) .

(b) *SO_2 emissions factor calculation.* The SO_2 emissions factor for each type of fuel consumed during the specified year, expressed in pounds per thousand tons for coal, pounds per thousand barrels for oil and pounds per million cubic feet (scf) for gas, shall be calculated as follows:
SO_2 Emissions Factor
= (average percent of sulfur by weight) x (k),
where,
average percent of sulfur by weight
= annual average, for a combustion source submitting annual data
= monthly average, for a combustion source submitting monthly data
k = 39,000 for bituminous coal or anthracite
= 35,000 for subbituminous coal
= 30,000 for lignite
= 5,964 for distillate (light) oil
= 6,594 for residual (heavy) oil
= 0.6 for natural gas
For other fuels, the combustion source must specify the SO_2 emissions factor.

(c) *Annual SO_2 emissions calculation.* Annual SO_2 Emissions for the specified calendar year, expressed in pounds, shall be calculated as follows:

(1) For a combustion source submitting monthly data,

Copyright 1993-1997, The Bureau of National Affairs, Inc.

$$\text{Annual } SO_2 \text{ Emissions} = \sum_{\text{months}=\text{Jan}}^{\text{Dec}} \sum_{\text{Fuel Types}} \left[\begin{array}{c} \text{quantity of fuel consumed} \\ \times\, SO_2 \text{ emissions factor} \\ \times\, (1 - \text{control system efficiency}) \\ \times\, (1 - \text{fuel pre-treatment efficiency}) \end{array} \right]$$

(2) For a combustion source submitting annual data:

where,

"quantity of fuel consumed" is as defined under §74.20(a)(2)(A);

"SO_2 emissions factor" is as defined under paragraph (b) of this section;

"control system efficiency" is as defined under §60.48(a) and part 60, Appendix A, Method 19 of this chapter, if applicable; and

"fuel pre-treatment efficiency" is as defined under §60.48(a) and part 60, Appendix A, Method 19 of this chapter, if applicable.

(d) *Annual fuel consumption calculation.* Annual fuel consumption for the specified calendar year, expressed in mmBtu, shall be calculated as defined under §74.20(b)(1)(i) or (ii).

(e) *Actual SO_2 emissions rate calculation.* The actual SO_2 emissions rate for the specified calendar year, expressed in lbs/mmBtu, shall be calculated as follows:

40 CFR 74.23 1985 Allowable SO_2 emissions rate.

(a) *Data requirements.*

(1) The designated representative of the combustion source shall submit the following data and the calculations under paragraph (b) of this section based on the submitted data:

(i) Allowable SO_2 emissions rate of the combustion source expressed in lbs/mmBtu as defined under §72.2 of this chapter for the calendar year specified in paragraph (a)(2) of this section. If the allowable SO_2 emissions rate is not expressed in lbs/mmBtu, the allowable emissions rate shall be converted to lbs/mmBtu by multiplying the emissions rate by the appropriate factor as specified in Table 1 of this section.

Table 1.--Factors to Convert Emission Limits to Pounds of SO_2/mmBtu

Unit measurement	Bituminous coal	Subbituminous coal	Lignite coal	Oil
lbs Sulfur/mmBtu	2.0	2.0	2.0	2.0
% Sulfur in fuel	1.66	2.22	2.86	1.07
ppm SO_2	0.00287	0.00384	.....	0.00167
ppm Sulfur in fuel	...	.....	.....	0.00334
tons SO_2/hour	2X8760/(annual fuel consumption for specified year[1(1)]X10[3])			

Copyright 1993-1997, The Bureau of National Affairs, Inc.

$$\text{Annual } SO_2 \text{ Emissions} = \sum_{\text{Fuel Types}} \left[\begin{array}{c} \text{quantity of fuel consumed} \\ \times\, SO_2 \text{ emissions factor} \\ \times\, (1 - \text{control system efficiency}) \\ \times\, (1 - \text{fuel pre-treatment efficiency}) \end{array} \right]$$

$$\text{Actual } SO_2 \text{ Emissions Rate} = \frac{\text{Annual } SO_2 \text{ Emissions}}{\text{Annual Fuel Consumption}}$$

lbs SO_2/hour..... 8760/(annual fuel consumption for specified year[1](2)x10^6)

[1] Annual fuel consumption as defined under §74.20(b)(1)(i) or (ii);specified calendar

(ii) Citation of statute, regulations, and any other authority under which the allowable emissions rate under paragraph (a)(1) of this section is established as applicable to the combustion source;

(iii) Averaging time associated with the allowable emissions rate under paragraph (a)(1) of this section.

(iv) The annualization factor for the combustion source, based on the type of combustion source and the associated averaging time of the allowable emissions rate of the combustion source, as set forth in the Table 2 of this section:

Table 2.--Annualization Factors for SO_2 Emission Rates

Type of combustion source	Annualization factor for scrubbed unit	Annualization factor for unscrubbed unit
Unit Combusting Oil, Gas, or some combination.....	1.00	1.00
Coal Unit with Averaging Time <= 1 day.....	0.93	0.89
Coal Unit with Averaging Time = 1 week.....	0.97	0.92
Coal Unit with Averaging Time = 30 days.....	1.00	0.96
Coal Unit with Averaging Time = 90 days.....	1.00	1.00
Coal Unit with Averaging Time = 1 year.....	1.00	1.00
Coal Unit with Federal Limit, but Averaging Time Not Specified.....	0.93	0.89

(2) *Calendar* Year.

(i) For combustion sources that commenced operation prior to January 1, 1985, the calendar year for the allowable SO_2 emissions rate shall be 1985.

(ii) For combustion sources that commenced operation after January 1, 1985, the calendar year for the allowable SO_2 emissions rate shall be the first year of the three consecutive calendar years of the alternative baseline under §74.20(b)(2) .

Copyright 1993-1997, The Bureau of National Affairs, Inc.

(iii) For combustion sources meeting the requirements of §74.20(c), the calendar year for calculating the allowable SO_2 emissions rate shall be the first year of the three consecutive calendar years to be used as alternative data under §74.20(c) .

(b) *1985 Allowable SO_2 emissions rate calculation.* The allowable SO_2 emissions rate for the specified calendar year shall be calculated as follows:

1985 Allowable SO_2 Emissions Rate = (Allowable SO_2 Emissions Rate) × (Annualization Factor)

40 CFR 74.24 Current allowable SO_2 emissions rate.

The designated representative shall submit the following data:

(a) Current allowable SO_2 emissions rate of the combustion source, expressed in lbs/mmBtu, which shall be the most stringent federally enforceable emissions limit in effect as of the date of submission of the opt-in application. If the allowable SO_2 emissions rate is not expressed in lbs/mmBtu, the allowable emissions rate shall be converted to lbs/mmBtu by multiplying the allowable rate by the appropriate factor as specified in Table 1 in §74.23(a)(1)(i).

(b) Citations of statute, regulation, and any other authority under which the allowable emissions rate under paragraph (a) of this section is established as applicable to the combustion source;

(c) Averaging time associated with the allowable emissions rate under paragraph (a) of this section.

40 CFR 74.25 Current promulgated SO_2 emissions limit.

The designated representative shall submit the following data:

(a) Current promulgated SO_2 emissions limit of the combustion source, expressed in lbs/mmBtu, which shall be the most stringent federally enforceable emissions limit that has been promulgated as of the date of submission of the opt-in permit application and that either is in effect on that date or will take effect after that date. If the promulgated SO_2 emissions limit is not expressed in lbs/mmBtu, the limit shall be converted to lbs/mmBtu by multiplying the limit by the appropriate factor as specified in Table 1 of § 74.23(a)(1)(i).

(b) Citations of statute, regulation and any other authority under which the emissions limit under paragraph (a) of this section is established as applicable to the combustion source;

(c) Averaging time associated with the emissions limit under paragraph (a) of this section.

(d) Effective date of the emissions limit under paragraph (a) of this section.

40 CFR 74.26 Allocation formula.

Copyright 1993-1997, The Bureau of National Affairs, Inc.

(a) The Administrator will calculate the annual allowance allocation for a combustion source based on the data, corrected as necessary, under §74.20 through § 74.25 as follows:

(1) For combustion sources for which the current promulgated SO_2 emissions limit under §74.25 is greater than or equal to the current allowable SO_2 emissions rate under §74.24, the number of allowances allocated for each year equals:

(2) For combustion sources in which the current promulgated SO_2 emissions limit under §74.25 is less than the current allowable SO_2 emissions rate under § 74.24.

(i) The number of allowances for each year ending prior to the effective date of the promulgated SO_2 emissions limit equals:

(ii) The number of allowances for the year that includes the effective date of the promulgated SO_2 emissions limit and for each year thereafter equals:

40 CFR 74.28 Allowance allocation for combustion sources becoming opt-in sources on a date other than January 1.

(a) *Dates of entry.*

(1) If an opt-in source provided monthly data under §74.20, the opt-in source's opt-in permit may become effective at the beginning of a calendar quarter as of January 1, April 1, July 1, or October 1.

(2) If an opt-in source provided annual data under §74.20, the opt-in source's opt- in permit must become effective on January 1.

(b) *Prorating by Calendar Quarter.* Where a combustion source's opt-in permit becomes effective on April 1, July 1, or October 1 of a given year, the Administrator will prorate the allowance allocation for that first year by the calendar quarters remaining in the year as follows:
Allowances for the first year

(1) For combustion sources that commenced operations before January 1, 1985,

Copyright 1993-1997, The Bureau of National Affairs, Inc.

$$\text{Allowances} = \frac{\begin{bmatrix}\text{baseline}\\ \text{or}\\ \text{alternative baseline}\end{bmatrix} \times \text{the lesser of} \begin{bmatrix}\text{the actual } SO_2 \text{ emissions rate}\\ \text{or}\\ \text{the 1985 allowable } SO_2 \text{ emissions rate}\\ \text{or}\\ \text{the current allowable } SO_2 \text{ emissions rate}\end{bmatrix}}{2000}$$

$$\text{Allowances} = \frac{\begin{bmatrix}\text{baseline}\\ \text{or}\\ \text{alternative baseline}\end{bmatrix} \times \text{the lesser of} \begin{bmatrix}\text{the actual } SO_2 \text{ emissions rate}\\ \text{or}\\ \text{the 1985 allowable } SO_2 \text{ emissions rate}\\ \text{or}\\ \text{the current allowable } SO_2 \text{ emissions rate}\end{bmatrix}}{2000}$$

$$\text{Allowances} = \frac{\begin{bmatrix}\text{baseline}\\ \text{or}\\ \text{alternative baseline}\end{bmatrix} \times \text{the lesser of} \begin{bmatrix}\text{the actual } SO_2 \text{ emissions rate}\\ \text{or}\\ \text{the 1985 allowable } SO_2 \text{ emissions rate}\\ \text{or}\\ \text{the current promulgated } SO_2 \text{ emissions rate}\end{bmatrix}}{2000}$$

$$= \left(\frac{\text{first year partial baseline}}{\text{baseline or alternative baseline}} \right) \times \text{annual allocation of allowances for the first year}$$

(2) For combustion sources that commenced operations after January 1, 1985,

(3) Under paragraphs (b)(1) and (2) of this section,

(i) "Remaining calendar quarters" shall be the calendar quarters in the first year for which the opt-in permit will be effective.

(ii) Fuel consumption for remaining calendar quarters =

where unit conversion
= 2 for coal
= 0.001 for oil
= 1 for gas
For other fuels, the combustion source must specify unit conversion;
and where starting month
= April, if effective date is April 1;
= July, if effective date is July 1; and
= October, if effective date is October 1.

Subpart D—Allowance Calculations for Process Sources—[Reserved]

Subpart E—Allowance Tracking and Transfer and End of Year Compliance

40 CFR 74.40 Establishment of opt-in source allowance accounts.

(a) *Establishing accounts.* Not earlier than the date on which a combustion or process source becomes an affected unit under this part and upon receipt of a request for an opt-in account under paragraph (b) of this section, the Administrator will establish an account and allocate allowances in accordance with subpart C of this part for combustion sources or subpart D of this part for process sources. A separate unit account will be established for each opt-in source.

(b) *Request for opt-in account.* The designated representative of the opt-in source shall, on or after the effective date of the opt-in permit as specified in § 74.14(d), submit a letter requesting the opening of an allowance account in the Allowance Tracking System to the Administrator.

40 CFR 74.41 Identifying allowances.

Copyright 1993-1997, The Bureau of National Affairs, Inc.

$$\text{first year partial baseline} = \frac{\sum_{\text{Year}=1985}^{1987} \text{fuel consumption for remaining calendar quarters}}{3}$$

$$\text{first year partial baseline} = \sum_{\text{First 3 consecutive years}} \frac{\text{fuel consumption for the remaining calendar quarters}}{3}$$

$$\sum_{\text{months}=\text{Apr., Jul., or Oct.}}^{\text{Dec}} \sum_{\text{Fuel Types}} \text{quantity of fuel consumed} \times \text{heat content} \times \text{unit conversion}$$

(a) *Identifying allowances.* Allowances allocated to an opt-in source will be assigned a serial number that identifies them as being allocated under an opt-in permit.

(b) *Submittal of opt-in allowances for auction.*

(1) An authorized account representative may offer for sale in the spot auction under §73.70 of this chapter allowances that are allocated to opt-in sources , if the allowances have a compliance use date earlier than the year in which the spot auction is to be held and if the Administrator has completed the deductions for compliance under §73.35(b) for the compliance year corresponding to the compliance use date of the offered allowances.

(2) Authorized account representatives may not offer for sale in the advance auctions under §73.70 of this chapter allowances allocated to opt-in sources.

40 CFR 74.42 Prohibition on future year transfers.

(a) The Administrator will not record a transfer of opt-in allowances allocated to opt-in sources from a future year subaccount into any other future year subaccount in the Allowance Tracking System.

40 CFR 74.43 Annual compliance certification report.

(a) *Applicability and deadline.* For each calendar year in which an opt-in source is subject to the Acid Rain emissions limitations, the designated representative of the opt-in source shall submit to the Administrator, no later than 60 days after the end of the calendar year, an annual compliance certification report for the opt-in source in lieu of any annual compliance certification report required under subpart I of part 72 of this chapter.

(b) *Contents of report.* The designated representative shall include in the annual compliance certification report the following elements, in a format prescribed by the Administrator, concerning the opt-in source and the calendar year covered by the report:

(1) Identification of the opt-in source ;

(2) An opt-in utilization report in accordance with §74.44 for combustion sources and §74.45 for process sources;

(3) A thermal energy compliance report in accordance with §74.47 for combustion sources and §74.48 for process sources, if applicable;

(4) Shutdown or reconstruction information in accordance with §74.46, if applicable;

(5) A statement that the opt-in source has not become an affected unit under § 72.6 of this chapter;

(6) At the designated representative's option, the total number of allowances to be deducted for

Copyright 1993-1997, The Bureau of National Affairs, Inc.

the year, using the formula in §74.49, and the serial numbers of the allowances that are to be deducted; and

(7) At the designated representative's option, for opt-in sources that share a common stack and whose emissions of sulfur dioxide are not monitored separately or apportioned in accordance with part 75 of this chapter, the percentage of the total number of allowances under paragraph (b)(6) of this section for all such affected units that is to be deducted from each affected unit's compliance subaccount; and

(8) The compliance certification under paragraph (c) of this section.

(c) *Annual compliance certification.* In the annual compliance certification report under paragraph (a) of this section, the designated representative shall certify, based on reasonable inquiry of those persons with primary responsibility for operating the opt-in source in compliance with the Acid Rain Program, whether the opt- in source was operated during the calendar year covered by the report in compliance with the requirements of the Acid Rain Program applicable to the opt-in source, including:

(1) Whether the opt-in source was operated in compliance with applicable Acid Rain emissions limitations, including whether the opt-in source held allowances, as of the allowance transfer deadline, in its compliance subaccount (after accounting for any allowance deductions or other adjustments under §73.34(c) of this chapter) not less than the opt-in source 's total sulfur dioxide emissions during the calendar year covered by the annual report;

(2) Whether the monitoring plan that governs the opt-in source has been maintained to reflect the actual operation and monitoring of the opt-in source and contains all information necessary to attribute monitored emissions to the opt-in source;

(3) Whether all the emissions from the opt-in source or group of affected units (including the opt-in source) using a common stack were monitored or accounted for through the missing data procedures and reported in the quarterly monitoring reports in accordance with part 75 of this chapter;

(4) Whether the facts that form the basis for certification of each monitor at the opt-in source or group of affected units (including the opt-in source) using a common stack or of an opt-in source's qualifications for using an Acid Rain Program excepted monitoring method or approved alternative monitoring method, if any, have changed;

(5) If a change is required to be reported under paragraph (c)(4) of this section, specify the nature of the change, the reason for the change, when the change occurred, and how the unit's compliance status was determined subsequent to the change, including what method was used to determine emissions when a change mandated the need for monitoring recertification; and

(6) When applicable, whether the opt- in source was operating in compliance with its thermal energy plan as provided in §74.47 for combustion sources and §74.48 for process sources.

Copyright 1993-1997, The Bureau of National Affairs, Inc.

40 CFR 74.44 Reduced utilization for combustion sources.

(a) *Calculation of Utilization.*

(1) *Annual utilization.*

(i) Except as provided in paragraph (a)(1)(ii) of this section, annual utilization for the calendar year shall be calculated as follows:
Annual Utilization = Actual heat input + Reduction from improved efficiency
where,

(A) "Actual heat input" shall be the actual annual heat input (in mmBtu) of the opt-in source for the calendar year determined in accordance with Appendix F of part 75 of this chapter.

(B) "Reduction from improved efficiency" shall be the sum of the following four elements: Reduction from demand side measures that improve the efficiency of electricity consumption; reduction from demand side measures that improve the efficiency of steam consumption; reduction from improvements in the heat rate at the opt-in source; and reduction from improvement in the efficiency of steam production at the opt-in source . Qualified demand side measures applicable to the calculation of utilization for opt-in sources are listed in Appendix A, Section 1 of part 73 of this chapter.

(C) "Reduction from demand side measures that improve the efficiency of electricity consumption" shall be a good faith estimate of the expected kilowatt hour savings during the calendar year for such measures and the corresponding reduction in heat input (in mmBtu) resulting from those measures. The demand side measures shall be implemented at the opt-in source, in the residence or facility to which the opt-in source delivers electricity for consumption or in the residence or facility of a customer to whom the opt- in source's utility system sells electricity. The verified amount of such reduction shall be submitted in accordance with paragraph (c)(2) of this section.

(D) "Reduction from demand side measures that improve the efficiency of steam consumption" shall be a good faith estimate of the expected steam savings (in mmBtu) from such measures during the calendar year and the corresponding reduction in heat input (in mmBtu) at the opt-in source as a result of those measures. The demand side measures shall be implemented at the opt-in source or in the facility to which the opt-in source delivers steam for consumption. The verified amount of such reduction shall be submitted in accordance with paragraph (c)(2) of this section.

(E) "Reduction from improvements in heat rate" shall be a good faith estimate of the expected reduction in heat rate during the calendar year and the corresponding reduction in heat input (in mmBtu) at the opt-in source as a result of all improved unit efficiency measures at the opt- in source and may include supply-side measures listed in Appendix A, section 2.1 of part 73 of this chapter. The verified amount of such reduction shall be submitted in accordance with paragraph

Copyright 1993-1997, The Bureau of National Affairs, Inc.

(c)(2) of this section.

(F) "Reduction from improvement in the efficiency of steam production at the opt-in source" shall be a good faith estimate of the expected improvement in the efficiency of steam production at the opt- in source during the calendar year and the corresponding reduction in heat input (in mmBtu) at the opt-in source as a result of all improved steam production efficiency measures. In order to claim improvements in the efficiency of steam production, the designated representative of the opt-in source must demonstrate to the satisfaction of the Administrator that the heat rate of the opt-in source has not increased. The verified amount of such reduction shall be submitted in accordance with paragraph (c)(2) of this section.

(G) Notwithstanding paragraph (a)(1)(i)(B) of this section, where two or more opt-in sources, or two or more opt-in sources and Phase I units, include in their annual compliance certification reports their good faith estimate of kilowatt hour savings or steam savings from the same demand side measures that improve the efficiency of electricity or steam consumption:

(1) The designated representatives of all such opt-in sources and Phase I units shall submit with their annual compliance certification reports a certification signed by all such designated representatives. The certification shall apportion the total kilowatt hour savings or steam savings among such opt-in sources and Phase I units.

(2) Each designated representative shall include in its annual compliance certification report only its share of kilowatt hour savings or steam savings.

(ii) For an opt-in source whose opt-in permit becomes effective on a date other than January 1, annual utilization for the first year shall be calculated as follows:

where "actual heat input" and "reduction from improved efficiency" are defined as set forth in paragraph (a)(1)(i) of this section but are restricted to data or estimates for the "remaining calendar quarters", which are the calendar quarters that begin on or after the date the opt-in permit becomes effective.

(2) *Average utilization.* Average utilization for the calendar year shall be defined as the average of the annual utilization calculated as follows:

(i) For the first two calendar years after the effective date of an opt-in permit taking effect on January 1 or for the first two calendar years after the effective date of a thermal energy plan governing an opt-in source in accordance with §74.47 of this chapter, average utilization will be calculated as follows:

(A) Average utilization for the first year = annual utilization$_{year\ 1}$
where "annual utilization$_{year\ 1}$" is as calculated under paragraph (a)(1)(i) of this section.

Copyright 1993-1997, The Bureau of National Affairs, Inc.

$$\text{Annual Utilization} = \begin{matrix}\text{Actual heat input}\\ \text{for the remaining calendar quarters}\end{matrix} + \begin{matrix}\text{Reduction from improved efficiency}\\ \text{for the remaining calendar quarters}\end{matrix}$$

(B) Average utilization for the second year

where,

"revised annual utilization$_{year\ 1}$" is as submitted for the year under paragraph (c)(2)(i)(B) of this section and adjusted under paragraph (c)(2)(iii) of this section;

"annual utilization$_{year\ 2}$" is as calculated under paragraph (a)(1)(i) of this section.

(ii) For the first three calendar years after the effective date of the opt-in permit taking effect on a date other than January 1, average utilization will be calculated as follows:

(A) Average utilization for the first year after opt-in = annual utilization$_{year\ 1}$

where "annual utilization$_{year\ 1}$" is as calculated under paragraph (a)(1)(ii) of this section.

(B) Average utilization for the second year after opt-in

where,

"revised annual utilization$_{year\ 1}$" is as submitted for the year under paragraph (c)(2)(i)(B) of this section and adjusted under paragraph (c)(2)(iii) of this section; and

"annual utilization$_{year\ 2}$" is as calculated under paragraph (a)(1)(ii) of this section.

(C) Average utilization for the third year after opt-in

where,

"revised annual utilization$_{year\ 1}$" is as submitted for the year under paragraph (c)(2)(i)(B) of this section and adjusted under paragraph (c)(2)(iii) of this section; and

"revised annual utilization$_{year\ 2}$" is as submitted for the year under paragraph (c)(2)(i)(B) of this section and adjusted under paragraph (c)(2)(iii) of this section; and

"annual utilization$_{year\ 3}$" is as calculated under paragraph (a)(1)(ii) of this section.

(iii) Except as provided in paragraphs (a)(2)(i) and (a)(2)(ii), average utilization shall be the sum of annual utilization for the calendar year and the revised annual utilization, submitted under paragraph (c)(2)(i)(B) of this section and adjusted by the Administrator under paragraph (c)(2)(iii) of this section, for the two immediately preceding calendar years divided by 3.

(b) *Determination of reduced utilization and calculation of allowances.—*

(1) *Determination of reduced utilization.* For a year during which its opt-in permit is effective, an opt-in source has reduced utilization if the opt-in source 's average utilization for the calendar

Copyright 1993-1997, The Bureau of National Affairs, Inc.

$$= \left(\frac{\text{revised annual utilization}_{\text{year 1}} + \text{annual utilization}_{\text{year 2}}}{2} \right)$$

$$= \left(\frac{\text{revised annual utilization}_{\text{year 1}} + \text{annual utilization}_{\text{year 2}}}{\left(\begin{array}{c} \text{Number of months} \\ \text{in year 1 and year 2 for which} \\ \text{the opt-in permit is effective} \end{array} \right)} \right) \times 12$$

$$= \left(\frac{\text{revised annual utilization}_{\text{year 1}} + \text{revised annual utilization}_{\text{year 2}} + \text{annual utilization}_{\text{year 3}}}{\left(\begin{array}{c} \text{Number of months} \\ \text{in year 1, year 2, and year 3} \\ \text{for which the opt-in permit is effective} \end{array} \right)} \right) \times 12$$

year, as calculated under paragraph (a) of this section, is less than its baseline.

(2) *Calculation of allowances deducted for reduced utilization.* If the Administrator determines that an opt-in source has reduced utilization for a calendar year during which the opt-in source's opt- in permit is in effect, the Administrator will deduct allowances, as calculated under paragraph (b)(2)(i) of this section , from the compliance subaccount of the opt-in source's Allowance Tracking System account.

(i) Allowances deducted for reduced utilization =

(ii) The allowances deducted shall have the same or an earlier compliance use date as those allocated under subpart C of this part for the calendar year for which the opt-in source has reduced utilization.

(c) *Compliance.—*

(1) *Opt-in Utilization Report.* The designated representative for each opt-in source shall submit an opt-in utilization report for the calendar year, as part of its annual compliance certification report under §74.43, that shall include the following elements in a format prescribed by the Administrator:

(i) The name, authorized account representative identification number, and telephone number of the designated representative of the opt-in source;

(ii) The opt-in source's account identification number in the Allowance Tracking System;

(iii) The opt-in source's annual utilization for the calendar year, as defined under paragraph (a)(1) of this section, and the revised annual utilization, submitted under paragraph (c)(2)(i)(B) of this section and adjusted under paragraph (c)(2)(iii) of this section, for the two immediately preceding calendar years;

(iv) The opt-in source's average utilization for the calendar year, as defined under paragraph (a)(2) of this section;

(v) The difference between the opt-in source's average utilization and its baseline;

(vi) The number of allowances that shall be deducted, if any, using the formula in paragraph (b)(2)(i) of this section and the supporting calculations;

(2) *Confirmation report.*

(i) If the annual compliance certification report for an opt-in source includes estimates of any reduction in heat input resulting from improved efficiency as defined under paragraph (a)(1)(i) of this section, the designated representative shall submit, by July 1 of the year in which the annual

Copyright 1993-1997, The Bureau of National Affairs, Inc.

$$\text{Number of allowances allocated for the calendar year} \times \left(1 - \left(\frac{\text{average utilization}_{\text{calendar year}}}{\text{baseline}}\right)\right)$$

compliance certification report was submitted, a confirmation report, concerning the calendar year covered by the annual compliance certification report. The Administrator may grant, for good cause shown, an extension of the time to file the confirmation report. The confirmation report shall include the following elements in a format prescribed by the Administrator:

(A) *Verified reduction in heat input.* Any verified kwh savings or any verified steam savings from demand side measures that improve the efficiency of electricity or steam consumption, any verified reduction in the heat rate at the opt-in source , or any verified improvement in the efficiency of steam production at the opt-in source achieved and the verified corresponding reduction in heat input for the calendar year that resulted.

(B) *Revised annual utilization.* The opt-in source's annual utilization for the calendar year as provided under paragraph (c)(1)(iii) of this section, recalculated using the verified reduction in heat input for the calendar year under paragraph (c)(2)(i)(A) of this section.

(C) *Revised average utilization.* The opt-in source's average utilization as provided under paragraph (c)(1)(iv) of this section, recalculated using the verified reduction in heat input for the calendar year under paragraph (c)(2)(i)(A) of this section.

(D) *Recalculation of reduced utilization.* The difference between the opt-in source's recalculated average utilization and its baseline.

(E) *Allowance adjustment.* The number of allowances that should be credited or deducted using the formulas in paragraphs (c)(2)(iii)(C)and (D) of this section and the supporting calculations; and the number of adjusted allowances remaining using the formula in paragraph (c)(2)(iii)(E) of this section and the supporting calculations.

(ii) *Documentation.*

(A) For all figures under paragraphs (c)(2)(i)(A) of this section, the opt-in source must provide as part of the confirmation report, documentation (which may follow the EPA Conservation Verification Protocol) verifying the figures to the satisfaction of the Administrator.

(B) Notwithstanding paragraph (c)(2)(i)(A) of this section, where two or more opt-in sources, or two or more opt-in sources and Phase I units include in the confirmation report under paragraph (c)(2) of this section or §72.91(b) of this chapter the verified kilowatt hour savings or steam savings defined under paragraph (c)(2)(i)(A) of this section, for the calendar year, from the same specific measures:

(1) The designated representatives of all such opt-in sources and Phase I units shall submit with their confirmation reports a certification signed by all such designated representatives. The certification shall apportion the total kilowatt hour savings or steam savings as defined under paragraph (c)(2)(i)(A) of this section for the calendar year among such opt-in sources.

(2) Each designated representative shall include in the opt-in source 's confirmation report only

Copyright 1993-1997, The Bureau of National Affairs, Inc.

its share of the verified reduction in heat input as defined under paragraph (c)(2)(i)(A) of this section for the calendar year under the certification under paragraph (c)(2)(ii)(B)(1) of this section.

(iii) *Determination of reduced utilization based on confirmation report.*

(A) If an opt-in source must submit a confirmation report as specified under paragraph (c)(2) of this section, the Administrator, upon such submittal, will adjust his or her determination of reduced utilization for the calendar year for the opt-in source . Such adjustment will include the recalculation of both annual utilization and average utilization, using verified reduction in heat input as defined under paragraph (c)(2)(i)(A) of this section for the calendar year instead of the previously estimated values.

(B) *Estimates confirmed.* If the total, included in the confirmation report, of the amounts of verified reduction in the opt-in source's heat input equals the total estimated in the opt-in source 's annual compliance certification report for the calendar year, then the designated representative shall include in the confirmation report a statement indicating that is true.

(C) *Underestimate.* If the total, included in the confirmation report, of the amounts of verified reduction in the opt-in source's heat input is greater than the total estimated in the opt-in source 's annual compliance certification report for the calendar year, then the designated representative shall include in the confirmation report the number of allowances to be credited to the opt-in source's compliance subaccount calculated using the following formula:

Allowances credited for the calendar year in which the reduced utilization occurred=

where,

Average $\text{Utilization}_{\text{estimate}}$=

the average utilization of the opt-in source as defined under paragraph (a)(2) of this section, calculated using the estimated reduction in the opt-in source's heat input under (a)(1) of this section, and submitted in the annual compliance certification report for the calendar year.

Average $\text{Utilization}_{\text{verified}}$=

the average utilization of the opt-in source as defined under paragraph (a)(2) of this section, calculated using the verified reduction in the opt-in source's heat input as submitted under paragraph (c)(2)(i)(A) of this section by the designated representative in the confirmation report.

(D) *Overestimate.* If the total of the amounts of verified reduction in the opt-in source's heat input included in the confirmation report is less than the total estimated in the opt-in source's annual compliance certification report for the calendar year, then the designated representative shall include in the confirmation report the number of allowances to be deducted from the opt-in source's compliance subaccount, which equals the absolute value of the result of the formula for allowances credited under paragraph (c)(2)(iii)(C) of this section.

Copyright 1993-1997, The Bureau of National Affairs, Inc.

$$\text{Number of allowances allocated for the calendar year} \times \left[\frac{\text{Average utilization}_{\text{Verified}} - \text{Average utilization}_{\text{Estimate}}}{\text{baseline}} \right]$$

(E) *Adjusted allowances remaining*. Unless paragraph (c)(2)(iii)(B) of this section applies, the designated representative shall include in the confirmation report the adjusted amount of allowances that would have been held in the opt-in source's compliance subaccount if the deductions made under §73.35(b) of this chapter had been based on the verified, rather than the estimated, reduction in the opt-in source's heat input, calculated as follows:

where:

"Allowances held after deduction" shall be the amount of allowances held in the opt-in source's compliance subaccount after deduction of allowances was made under §73.35(b) of this chapter based on the annual compliance certification report.

"Excess emissions" shall be the amount (if any) of excess emissions determined under §73.35(d) for the calendar year based on the annual compliance certification report. "Allowances credited" shall be the amount of allowances calculated under paragraph (c)(2)(iii)(C) of this section.

"Allowances deducted" shall be the amount of allowances calculated under paragraph (c)(2)(iii)(D) of this section.

(1) If the result of the formula for "adjusted amount of allowances" is negative, the absolute value of the result constitutes excess emissions of sulfur dioxide. If the result is positive, there are no excess emissions of sulfur dioxide.

(2) If the amount of excess emissions of sulfur dioxide calculated under "adjusted amount of allowances" differs from the amount of excess emissions of sulfur dioxide determined under §73.35 of this chapter based on the annual compliance certification report, then the designated representative shall include in the confirmation report a demonstration of:

(*i*) The number of allowances that should be deducted to offset any increase in excess emissions or returned to the account for any decrease in excess emissions; and

(*ii*) The amount of the excess emissions penalty (excluding interest) that should be paid or returned to the account for the change in excess emissions.

(3) The Administrator will deduct immediately from the opt-in source 's compliance subaccount the amount of allowances necessary to offset any increase in excess emissions or will return immediately to the opt-in source's compliance subaccount the amount of allowances that he or she determines is necessary to account for any decrease in excess emissions.

(4) The designated representative may identify the serial numbers of the allowances to be deducted or returned. In the absence of such identification, the deduction will be on a first-in, first-out basis under §73.35(c)(2) of this chapter and the identification of allowances returned will be at the Administrator's discretion.

(5) If the designated representative of an opt-in source fails to submit on a timely basis a confirmation report, in accordance with paragraph (c)(2) of this section, with regard to the estimate of reductions in heat input as defined under paragraph (c)(2)(i)(A) of this section, then

Copyright 1993-1997, The Bureau of National Affairs, Inc.

$$\text{Adjusted amount of allowances} = \begin{array}{c}\text{Allowances held after deduction} - \text{Excess emissions} \\ + \text{Allowances credited} - \text{Allowances deducted}\end{array}$$

the Administrator will reject such estimate and correct it to equal zero in the opt-in source's annual compliance certification report that includes that estimate. The Administrator will deduct immediately, on a first-in, first-out basis under §73.35(c)(2) of this chapter, the amount of allowances that he or she determines is necessary to offset any increase in excess emissions of sulfur dioxide that results from the correction and will require the owners and operators of the opt- in source to pay an excess emission penalty in accordance with part 77 of this chapter.

(F) If the opt-in source is governed by an approved thermal energy plan under § 74.47 and if the opt-in source must submit a confirmation report as specified under paragraph (c)(2) of this section, the adjusted amount of allowances that should remain in the opt-in source's compliance subaccount shall be calculated as follows:

Adjusted amount of allowances =

where,

"Allowances allocated" shall be the original number of allowances allocated under section §74.40 for the calendar year.

"Tons emitted" shall be the total tons of sulfur dioxide emitted by the opt-in source during the calendar year, as reported in accordance with subpart F of this part for combustion sources.

"Allowances transferred to all replacement units" shall be the sum of allowances transferred to all replacement units under an approved thermal energy plan in accordance with §74.47 and adjusted by the Administrator in accordance with §74.47(d)(2).

"Allowances deducted for reduced utilization" shall be the total number of allowances deducted for reduced utilization as calculated in accordance with this section including any adjustments required under paragraph (c)(iii)(E) of this section.

40 CFR 74.45 Reduced utilization for process sources. [Reserved]

40 CFR 74.46 Opt-in source permanent shutdown, reconstruction, or change in aff ected status.

(a) *Notification.*

(1) When an opt-in source has permanently shutdown during the calendar year, the designated representative shall notify the Administrator of the date of shutdown, within 30 days of such shutdown.

(2) When an opt-in source has undergone a modification that qualifies as a reconstruction as defined in §60.15 of this chapter, the designated representative shall notify the Administrator of the date of completion of the reconstruction, within 30 days of such completion.

(3) When an opt-in source becomes an affected unit under §72.6 of this chapter, the designated representative shall notify the Administrator of such change in the opt-in source's affected status

Copyright 1993-1997, The Bureau of National Affairs, Inc.

$$= \text{allowances allocated} - \text{tons emitted} - \text{the larger of} \begin{pmatrix} \text{allowances transferred} \\ \text{to all replacement units} \\ \text{or} \\ \text{allowances deducted} \\ \text{for reduced utilization} \end{pmatrix}$$

within 30 days of such change.

(b) *Administrator's action.*

(1) The Administrator will terminate the opt-in source's opt-in permit and deduct allowances as provided below in the following circumstances:

(i) When an opt-in source has permanently shutdown. The Administrator shall deduct allowances equal in number to and with the same or earlier compliance use date as those allocated to the opt-in source under §74.40 for the calendar year in which the shut down occurs and for all future years following the year in which the shut down occurs; or

(ii) When an opt-in source has undergone a modification that qualifies as a reconstruction as defined in §60.15 of this chapter. The Administrator shall deduct allowances equal in number to and with the same or earlier compliance use date as those allocated to the opt-in source under § 74.40 for the calendar year in which the reconstruction is completed and all future years following the year in which the reconstruction is completed; or

(iii) When an opt-in source becomes an affected unit under §72.6 of this chapter. The Administrator shall deduct allowances equal in number to and with the same or earlier compliance use date as those allocated to the opt-in source under § 74.40 for the calendar year in which the opt-in source becomes affected under § 72.6 of this chapter and all future years following the calendar year in which the opt-in source becomes affected under § 72.6; or

(iv) When an opt-in source does not renew its opt-in permit. The Administrator shall deduct allowances equal in number to and with the same or earlier compliance use date as those allocated to the opt-in source under §74.40 for the calendar year in which the opt-in source's opt- in permit expires and all future years following the year in which the opt-in source's opt-in permit expires.

(2) After the allowance deductions under paragraph (b)(1) of this section are made, the Administrator will close the opt-in source's unit account in the Allowance Tracking System. If any allowances remain in the opt-in source's unit account after allowance deductions are made under paragraph (b)(1) of this section, and any deductions made under part 77 of this chapter, the Administrator will establish a general account for the opt-in source, and transfer any remaining allowances into this general account. The designated representative for the opt-in source shall become the authorized account representative for the general account.

40 CFR 74.47 Transfer of allowances from the replacement of thermal energy—combustion sources.

(a) *Thermal energy plan.—*

(1) *General provisions.* The designated representative of an opt-in source that seeks to qualify for the transfer of allowances based on the replacement of thermal energy by a replacement unit

Copyright 1993-1997, The Bureau of National Affairs, Inc.

shall submit a thermal energy plan subject to the requirements of §72.40(b) of this chapter for multi-unit compliance options and this section. The effective period of the thermal energy plan shall begin from January 1 of the first full calendar year for which the plan is approved and end December 31 of the last full calendar year for which the opt-in permit containing the plan is in effect.

(2) *Applicability.* This section shall apply to any designated representative of an opt-in source and any designated representative of each replacement unit seeking to transfer allowances based on the replacement of thermal energy.

(3) *Contents.* Each thermal energy plan shall contain the following elements in a format prescribed by the Administrator:

(i) The calendar year that the thermal energy plan takes effect, which shall be the first year the replacement unit(s) will replace thermal energy of the opt-in source;

(ii) The name, authorized account representative identification number, and telephone number of the designated representative of the opt-in source;

(iii) The name, authorized account representative identification number, and telephone number of the designated representative of each replacement unit;

(iv) The opt-in source's account identification number in the Allowance Tracking System;

(v) Each replacement unit's account identification number in the Allowance Tracking System (ATS);

(vi) The type of fuel used by each replacement unit;

(vii) The allowable SO_2 emissions rate, expressed in lbs/mmBtu, of each replacement unit for the calendar year for which the plan will take effect. When a thermal energy plan is renewed in accordance with paragraph (a)(9) of this section, the allowable SO_2 emission rate at each replacement unit will be the most stringent federally enforceable allowable SO_2 emissions rate applicable at the time of renewal for the calendar year for which the renewal will take effect. This rate will not be annualized;

(viii) The estimated amount of total thermal energy to be reduced at the opt-in source, including all energy flows (steam, gas, or hot water) used for any process or in any heating or cooling application;

(ix) The estimated total thermal energy at each replacement unit for the year prior to the year for which the plan is to take effect, including all energy flows (steam, gas, or hot water) used for any process or in any heating or cooling application;

(x) The estimated amount of total thermal energy at each replacement unit after replacing

Copyright 1993-1997, The Bureau of National Affairs, Inc.

thermal energy at the opt- in source, including all energy flows (steam, gas, or hot water) used for any process or in any heating or cooling application;

(xi) The estimated amount of thermal energy at each replacement unit, including all energy flows (steam, gas, or hot water) used for any process or in any heating or cooling application, replacing the thermal energy at the opt-in source;

(xii) Estimated total annual fuel input at each replacement unit after replacing thermal energy at the opt-in source;

(xiii) The number of allowances calculated under paragraph (b) of this section that the opt-in source will transfer to each replacement unit represented in the thermal energy plan.

(xiv) The estimated number of allowances to be deducted for reduced utilization under §74.44 ;

(xv) Certification that each replacement unit has entered into a legally binding steam sales agreement to provide the thermal energy, as calculated under paragraph (a)(3)(xi) of this section, that it is replacing for the opt-in source . The designated representative of each replacement unit shall maintain and make available to the Administrator, at the Administrator's request, copies of documents demonstrating that the replacement unit is replacing the thermal energy at the opt-in source.

(4) *Submission.* The designated representative of the opt-in source seeking to qualify for the transfer of allowances based on the replacement of thermal energy shall submit a thermal energy plan to the permitting authority by no later than July 1 of the calendar year prior to the first calendar year for which the plan is to be in effect. The thermal energy plan shall be signed and certified by the designated representative of the opt-in source and each replacement unit covered by the plan.

(5) *Retirement of opt-in source upon enactment of plan.*

(i) If the opt-in source will be permanently retired as of the effective date of the thermal energy plan, the opt-in source shall not be required to monitor its emissions upon retirement, consistent with § 75.67 of this chapter, provided that the following requirements are met:

(A) The designated representative of the opt-in source shall include in the plan a request for an exemption from the requirements of part 75 in accordance with §75.67 of this chapter and shall submit the following statement: "I certify that the opt-in source ("is" or "will be", as applicable) permanently retired on the date specified in this plan and will not emit any sulfur dioxide or nitrogen oxides after such date."

(B) The opt-in source shall not emit any sulfur dioxide or nitrogen oxides after the date specified in the plan.

(ii) Notwithstanding the monitoring exemption discussed in paragraph (a)(5)(i) of this section, the designated representative for the opt-in source shall submit the annual compliance certification

Copyright 1993-1997, The Bureau of National Affairs, Inc.

report provided under paragraph (d) of this section.

(6) *Administrator's action.* If the permitting authority approves a thermal energy plan, the Administrator will annually transfer allowances to the Allowance Tracking System account of each replacement unit, as provided in the approved plan.

(7) *Incorporation, modification and renewal of a thermal energy plan.*

(i) An approved thermal energy plan, including any revised or renewed plan that is approved, shall be incorporated into both the opt-in permit for the opt-in source and the Acid Rain permit for each replacement unit governed by the plan. Upon approval, the thermal energy plan shall be incorporated into the Acid Rain permit for each replacement unit pursuant to the requirements for administrative permit amendments under §72.83 of this chapter.

(ii) In order to revise an opt-in permit to add an approved thermal energy plan or to change an approved thermal energy plan, the designated representative of the opt-in source shall submit a plan or a revised plan under paragraph (a)(4) of this section and meet the requirements for permit revisions under §72.80 and either §72.81 or §72.82 of this chapter.

(8) *Termination of plan.*

(i) A thermal energy plan shall be in effect until the earlier of the expiration of the opt-in permit for the opt-in source or the year for which a termination of the plan takes effect under paragraph (a)(8)(ii) of this section.

(ii) *Termination of plan by opt-in source and replacement units.* A notification to terminate a thermal energy plan in accordance with §72.40(d) of this chapter shall be submitted no later than December 1 of the calendar year for which the termination is to take effect.

(iii) If the requirements of paragraph (a)(8)(ii) of this section are met and upon revision of the opt-in permit of the opt-in source and the Acid Rain permit of each replacement unit governed by the thermal energy plan to terminate the plan pursuant to §72.83 of this chapter, the Administrator will adjust the allowances for the opt-in source and the replacement units to reflect the transfer back to the opt-in source of the allowances transferred from the opt-in source under the plan for the year for which the termination of the plan takes effect.

(9) *Renewal of thermal energy plan.* The designated representative of an opt-in source may renew the thermal energy plan as part of its opt-in permit renewal in accordance with §74.19.

(b) *Calculation of transferable allowances—*

(1) *Qualifying thermal energy.* The amount of thermal energy credited towards the transfer of allowances based on the replacement of thermal energy shall equal the qualifying thermal energy and shall be calculated for each replacement unit as follows:

Copyright 1993-1997, The Bureau of National Affairs, Inc.

(2) *Fuel associated with qualifying thermal energy.* The fuel associated with the qualifying thermal energy at each replacement unit shall be calculated as follows:

where,

"Qualifying thermal energy" for the replacement unit is as defined in paragraph (b)(1) of this section;

"Efficiency constant" for the replacement unit

= 0.85, where the replacement unit is a boiler

= 0.80, where the replacement unit is a cogenerator

(3) *Allowances transferable from the opt-in source to each replacement unit.* The number of allowances transferable from the opt-in source to each replacement unit for the replacement of thermal energy is calculated as follows:

where,

"Allowable SO_2 emission rate" for the replacement unit is as defined in paragraph (a)(3)(vii) of this section;

"Fuel associated with qualifying thermal energy" is as defined in paragraph (b)(2) of this section;

(c) *Transfer prohibition.* The allowances transferred from the opt-in source to each replacement unit shall not be transferred from the unit account of the replacement unit to any other account in the Allowance Tracking System.

(d) *Compliance—*

(1) *Annual compliance certification report.*

(i) As required for all opt-in sources , the designated representative of the opt-in source covered by a thermal energy plan must submit an opt-in utilization report for the calendar year as part of its annual compliance certification report under § 74.44(c)(1).

(ii) The designated representative of an opt-in source must submit a thermal energy compliance report for the calendar year as part of the annual compliance certification report, which must include the following elements in a format prescribed by the Administrator:

(A) The name, authorized account representative identification number, and telephone number of the designated representative of the opt-in source;

(B) The name, authorized account representative identification number, and telephone number

Copyright 1993-1997, The Bureau of National Affairs, Inc.

$$\text{Qualifying thermal energy} = \begin{array}{c}\text{the estimated thermal energy}\\ \text{at the replacement unit}\\ \text{under paragraph (a)(3)(xi) of this section}\end{array}$$

$$\text{Fuel associated with Qualifying thermal energy} = \frac{\text{Qualifying thermal energy}}{\text{Efficiency constant}}$$

$$\text{transferable allowances for the replacement unit} = \frac{\text{Fuel Associated with Qualifying thermal energy} \times \text{allowable } SO_2 \text{ emission rate}_{\text{replacement unit}} \text{ (in lb/mmBtu)}}{2000}$$

of the designated representative of each replacement unit;

(C) The opt-in source's account identification number in the Allowance Tracking System (ATS);

(D) The account identification number in the Allowance Tracking System (ATS) for each replacement unit;

(E) The actual amount of total thermal energy reduced at the opt-in source during the calendar year, including all energy flows (steam, gas, or hot water) used for any process or in any heating or cooling application;

(F) The actual amount of thermal energy at each replacement unit, including all energy flows (steam, gas, or hot water) used for any process or in any heating or cooling application, replacing the thermal energy at the opt-in source;

(G) The actual amount of total thermal energy at each replacement unit after replacing thermal energy at the opt-in source, including all energy flows (steam, gas, or hot water) used for any process or in any heating or cooling application;

(H) Actual total fuel input at each replacement unit as determined in accordance with part 75 of this chapter;

(I) Calculations of allowance adjustments to be performed by the Administrator in accordance with paragraph (d)(2) of this section.

(2) *Allowance adjustments by Administrator.*

(i) The Administrator will adjust the number of allowances in the Allowance Tracking System accounts for the opt-in source and for each replacement unit to reflect any changes between the estimated values submitted in the thermal energy plan pursuant to paragraph (a) of this section and the actual values submitted in the thermal energy compliance report pursuant to paragraph (d) of this section. The values to be considered for this adjustment include:

(A) The number of allowances transferable by the opt-in source to each replacement unit, calculated in paragraph (b) of this section using the actual, rather than estimated, thermal energy at the replacement unit replacing thermal energy at the opt-in source.

(B) The number of allowances deducted from the Allowance Tracking System account of the opt-in source, calculated under §74.44(b)(2).

(ii) If the opt-in source includes in the opt-in utilization report under §74.44 estimates for reductions in heat input, then the Administrator will adjust the number of allowances in the Allowance Tracking System accounts for the opt-in source and for each replacement unit to reflect any differences between the estimated values submitted in the opt-in utilization report and the actual values submitted in the confirmation report pursuant to § 74.44(c)(2).

Copyright 1993-1997, The Bureau of National Affairs, Inc.

(3) *Liability.* The owners and operators of an opt-in source or a replacement unit governed by an approved thermal energy plan shall be liable for any violation of the plan or this section at that opt-in source or replacement unit that is governed by the thermal energy plan, including liability for fulfilling the obligations specified in part 77 of this chapter and section 411 of the Act.

40 CFR 74.48 Transfer of allowances from the replacement of thermal energy—process sources [Reserved]

40 CFR 74.49 Calculation for deducting allowances.

(a) *Allowance deduction formula.* The following formula shall be used to determine the total number of allowances to be deducted for the calendar year from the allowances held in an opt-in source 's compliance subaccount as of the allowance transfer deadline applicable to that year:
Total allowances deducted = Tons emitted + Allowances deducted for reduced utilization
where:

(1) (i) Except as provided in paragraph (a)(1)(ii) of this section, Tons emitted" shall be the total tons of sulfur dioxide emitted by the opt-in source during the calendar year, as reported in accordance with subpart F of this part for combustion sources or subpart G of this part for process sources.

(ii) If the effective date of the opt-in source's permit took effect on a date other than January 1, "Tons emitted" for the first calendar year shall be the total tons of sulfur dioxide emitted by the opt-in source during the calendar quarters for which the opt-in source's opt-in permit is effective, as reported in accordance with subpart F of this part for combustion sources or subpart G of this part for process sources.

(2) "Allowances deducted for reduced utilization" shall be the total number of allowances deducted for reduced utilization as calculated in accordance with § 74.44 for combustion sources or §74.45 for process sources.

40 CFR 74.50 Deducting opt-in source allowances from ATS accounts.

(a) *Deduction of allowances.* The Administrator may deduct any allowances that were allocated to an opt-in source under §74.40 by removing, from any Allowance Tracking System accounts in which they are held, the allowances in an amount specified in paragraph (d) of this section, under the following circumstances:

(1) When the opt-in source has permanently shut down; or

(2) When the opt-in source has been reconstructed; or

(3) When the opt-in source becomes an affected unit under §72.6 of this chapter; or

(4) When the opt-in source fails to renew its opt-in permit.

Copyright 1993-1997, The Bureau of National Affairs, Inc.

(b) *Method of deduction.* The Administrator will deduct allowances beginning with those allowances with the latest recorded date of transfer out of the opt-in source's unit account.

(c) *Notification of deduction.* When allowances are deducted, the Administrator will send a written notification to the authorized account representative of each Allowance Tracking System account from which allowances were deducted. The notification will state:

(1) The serial numbers of all allowances deducted from the account,

(2) The reason for deducting the allowances, and

(3) The date of deduction of the allowances.

(d) *Amount of deduction.* The Administrator may deduct allowances in accordance with paragraph (a) of this section in an amount required to offset any excess emissions in accordance with part 77 of this chapter and when an opt-in source does not hold allowances equal in number to and with the same or earlier compliance use date for the calendar years specified under §74.46(b)(1)(i) through (iv) in an amount required to be deducted under §74.46(b)(1)(i) through (iv).

Subpart F—Monitoring Emissions: Combustion Sources

40 CFR 74.60 Monitoring requirements.

(a) *Monitoring requirements for combustion sources.* The owner or operator of each combustion source shall meet all of the requirements specified in part 75 of this chapter for the owners and operators of an affected unit to install, certify, operate, and maintain a continuous emission monitoring system, an excepted monitoring system, or an approved alternative monitoring system in accordance with part 75 of this chapter.

(b) *Monitoring requirements for opt- in sources.* The owner or operator of each opt-in source shall install, certify, operate, and maintain a continuous emission monitoring system, an excepted monitoring system, an approved alternative monitoring system in accordance with part 75 of this chapter.

40 CFR 74.61 Monitoring plan.

(a) *Monitoring plan.* The designated representative of a combustion source shall meet all of the requirements specified under part 75 of this chapter for a designated representative of an affected unit to submit to the Administrator a monitoring plan that includes the information required in a monitoring plan under §75.53 of this chapter. This monitoring plan shall be submitted as part of the combustion source's opt-in permit application under §74.14 of this part.

(b) [Reserved].

Copyright 1993-1997, The Bureau of National Affairs, Inc.

Subpart G—Monitoring Emissions: Process Sources—[Reserved]

Copyright 1993-1997, The Bureau of National Affairs, Inc.

Endnotes

1 (Popup)

[1] Annual fuel consumption as defined under §74.20(b)(1)(i) or (ii);specified calendar year as defined under 74.23(a)(2).

2 (Popup)

[1] Annual fuel consumption as defined under §74.20(b)(1)(i) or (ii);specified calendar year as defined under 74.23(a)(2).

Copyright 1993-1997, The Bureau of National Affairs, Inc.

CHAPTER I—ENVIRONMENTAL PROTETION AGENCY

SUBCHAPTER C—AIR PROGRAMS

PART 75—CONTINUOUS EMISSION MONITORING

Proposed Regulation(s) Preamble(s) APC Analysis

HISTORY: 40 CFR 75; 58 FR 3702, Jan. 11, 1993; amended at 58 FR 15716, March 23, 1993; corrected at 58 FR 34126, June 23, 1993; 58 FR 40746, July 30, 1993; amended at 59 FR 42511, Aug. 18, 1994; 60 FR 17111, April 4, 1995; 60 FR 26513, May 17, 1995; 60 FR 26566, May 17, 1995; 60 FR 40296, Aug. 8, 1995; 61 FR 25580, May 22, 1996; 61 FR 59142, Nov. 20, 1996

AUTHORITY:
42 U.S.C. 7601 and 7651k.

[Amended at 58 FR 15716, March 23, 1993; 59 FR 42511, Aug. 18, 1994; 60 FR 17111, April 4, 1995; 60 FR 26513, May 17, 1995; 60 FR 26566, May 17, 1995; 61 FR 25581, May 22, 1996; 61 FR 59157, Nov. 20, 1996]

Subpart A—General

40 CFR 75.1 Purpose and scope.

(a) *Purpose.* The purpose of this part is to establish requirements for the monitoring, recordkeeping, and reporting of sulfur dioxide, nitrogen oxides, and carbon dioxide emissions, volumetric flow, and opacity data from affected units under the Acid Rain Program pursuant to Sections 412 and 821 of the Clean Air Act, 42 U.S.C. 7401-7671q as amended by Public Law 101-549 [November 15, 1990] [the Act].

(b) (1) *Scope.* The regulations established under this part include general requirements for the installation, certification, operation, and maintenance of continuous emission or opacity monitoring systems and specific requirements for the monitoring of SO_2 emissions, volumetric flow, NO_x emissions, opacity, CO_2 emissions and SO_2 emissions removal by qualifying Phase I technologies. Specifications for the installation and performance of continuous emission monitoring systems, certification tests and procedures, and quality assurance tests and procedures

Copyright 1993-1997, The Bureau of National Affairs, Inc.

are included in Appendices A and B to this part. Criteria for alternative monitoring systems and provisions to account for missing data from certified continuous emission monitoring systems or approved alternative monitoring systems are also included in the regulation.

[Former 75.1(b) redesignated as (b)(1) at 58 FR 40746, July 30, 1993]

(2) Statistical estimation procedures for missing data are included in appendix C to this part. Optional protocols for estimating SO_2 mass emissions from gas-fired or oil-fired units and NO_x emissions from gas-fired peaking or oil-fired peaking units are included in appendices D and E, respectively, to this part. Requirements for recording and recordkeeping of monitoring data and for quarterly electronic reporting also are specified. Procedures for conversion of monitoring data into units of the standard are included in appendix F to this part. Procedures for the monitoring and calculation of CO_2 emissions are included in appendix G of this part.

[§75.1(b) corrected at 58 FR 34126, June 23, 1993; corrected and designated as (b)(2) at 58 FR 40746, July 30, 1993]

40 CFR 75.2 Applicability.

(a) Except as provided in paragraph (b) of this section, the provisions of this part apply to each affected unit subject to Acid Rain emission limitations or reduction requirements for SO_2 or NO_x.

(b) The provisions of this part do not apply to:

(1) A new unit for which a written exemption has been issued under §72.7 of this chapter (any new unit that serves one or more generators with total nameplate capacity of 25 MWe or less and burns only fuels with a sulfur content of 0.05 percent or less by weight may apply to the Administrator for an exemption); or

(2) Any unit not subject to the requirements of the Acid Rain Program due to operation of any paragraph of §72.6(b) of this chapter; or

[§75.2(b)(2) revised at 58 FR 15716, March 23, 1993]

(3) An affected unit for which a written exemption has been issued under §72.8 of this chapter and an exception granted under §75.67 of this part.

[§75.2(b)(3) revised at 58 FR 15716, March 23, 1993]

(4) [Removed]

[§75.2(b)(4) removed at 60 FR 26513, May 17, 1995]

40 CFR 75.3 General Acid Rain Program provisions.

The provisions of part 72, including the following, shall apply to this part:

(a) §72.2 (Definitions);

Copyright 1993-1997, The Bureau of National Affairs, Inc.

(b) §72.3 (Measurements, Abbreviations, and Acronyms);
(c) §72.4 (Federal Authority);
(d) §72.5 (State Authority);
(e) §72.6 (Applicability);
(f) §72.7 (New Unit Exemption);
(g) §72.8 (Retired Units Exemption);
(h) §72.9 (Standard Requirements);
(i) §72.10 (Availability of Information); and
(j) §72.11 (Computation of Time).

In addition, the procedures for appeals of decisions of the Administrator under this part are contained in part 78 of this chapter.

40 CFR 75.4 Compliance dates.

(a) The provisions of this part apply to each existing Phase I and Phase II unit on February 10, 1993. For substitution or compensating units that are so designated under the acid rain permit which governs the unit and contains the approved substitution or reduced utilization plan, pursuant to §72.41 or §72.43 of this chapter, the provisions of this part become applicable upon the issuance date of the acid rain permit. For combustion sources seeking to enter the Opt-in Program in accordance with part 74 of this chapter, the provisions of this part become applicable upon the submission of an opt-in permit application in accordance with §74.14 of this chapter. In accordance with §75.20, the owner or operator of each existing affected unit shall ensure that all monitoring systems required by this part for monitoring SO_2, NO_x, CO_2, opacity, and volumetric flow are installed and all certification tests are completed not later than the following dates (except as provided in paragraphs (d) through (h) of this section):

[§75.4(a) introductory text amended at 60 FR 71111, April 4, 1995; 60 FR 26513, May 17, 1995]

[§75.4(a)(1) and (2) revised at 60 FR 26513, May 17, 1995]

(1) For a unit listed in Table 1 of §73.10(a) of this chapter, November 15, 1993.

(2) For a substitution or a compensating unit that is designated under an approved substitution plan or reduced utilization plan pursuant to §72.41 or §72.43 of this chapter, or for a unit that is designated an early election unit under an approved NO_X compliance plan pursuant to part 76 of this chapter, that is not conditionally approved and that is effective for 1995, the earlier of the following dates:

(i) January 1, 1995; or

(ii) 90 days after the issuance date of the Acid Rain permit (or date of approval of permit revision) that governs the unit and contains the approved substitution plan, reduced utilization plan, or NO_X compliance plan.

Copyright 1993-1997, The Bureau of National Affairs, Inc.

(3) For either a Phase II unit, other than a gas-fired unit or an oil-fired unit, or a substitution or compensating unit that is not a substitution or compensating unit under paragraph (a)(2) of this section: January 1, 1995.

[§75.4(a)(3) revised at 59 FR 42511, Aug. 18, 1994; 60 FR 26513, May 17, 1995]

(4) For a gas-fired Phase II unit or an oil-fired Phase II unit, January 1, 1995, except that installation and certification tests for continuous emission monitoring systems for NO_X and CO_2 or excepted monitoring systems for NO_X under appendix E or CO_2 estimation under appendix G of this part shall be completed as follows:

(i) For an oil-fired Phase II unit or a gas-fired Phase II unit located in an ozone nonattainment area or the ozone transport region, not later than July 1, 1995; or

(ii) For an oil-fired Phase II unit or a gas-fired Phase II unit not located in an ozone nonattainment area or the ozone transport region, not later than January 1, 1996.

[§75.4(a)(4) added at 59 FR 42511, Aug. 18, 1994; revised at 60 FR 26513, May 17, 1995]

(5) For combustion sources seeking to enter the Opt-in Program in accordance with part 74 of this chapter, the expiration date of a combustion source's opt-in permit under §74.14(e) of this chapter.

[§75.4(a)(5) added at 60 FR 71111, April 4, 1995]

(b) In accordance with §75.20, the owner or operator of each new affected unit shall ensure that all monitoring systems required under this part for monitoring of SO_2, NO_X, CO_2, opacity, and volumetric flow are installed and all certification tests are completed on or before the later of the following dates:

(1) January 1, 1995, except that for a gas-fired unit or oil-fired unit located in an ozone nonattainment area or the ozone transport region, the date for installation and completion of all certification tests for NO_X and CO_2 monitoring systems shall be July 1, 1995 and for a gas-fired unit or an oil-fired unit not located in an ozone nonattainment area or the ozone transport region, the date for installation and completion of all certification tests for NO_X and CO_2 monitoring systems shall be January 1, 1996; or

(2) Not later than 90 days after the date the unit commences commercial operation, notice of which date shall be provided under subpart G of this part.

[§75.4(b) revised at 60 FR 26513, May 17, 1995]

(c) In accordance with §75.20, the owner or operator of any unit affected under any paragraph of §72.6(a)(3)(ii) through (vii) of this chapter shall ensure that all monitoring systems required

Copyright 1993-1997, The Bureau of National Affairs, Inc.

under this part for monitoring of SO_2, NO_X, CO_2, opacity, and volumetric flow are installed and all certification tests are completed on or before the later of the following dates:

(1) January 1, 1995, except that for a gas-fired unit or oil-fired unit located in an ozone nonattainment area or the ozone transport region, the date for installation and completion of all certification tests for NO_X and CO_2 monitoring systems shall be July 1, 1995 and for a gas-fired unit or an oil-fired unit not located in an ozone nonattainment area or the ozone transport region, the date for installation and completion of all certification tests for NO_X and CO_2 monitoring systems shall be January 1, 1996; or

(2) Not later than 90 days after the date the unit becomes subject to the requirements of the Acid Rain Program, notice of which date shall be provided under subpart G of this part.

[§75.4(c) revised at 58 FR 15716, March 23, 1993; 60 FR 26513, May 17, 1995]

(d) In accordance with §75.20, the owner or operator of an existing unit that is shutdown and is not yet operating by the applicable dates listed in paragraph (a) of this section, shall ensure that all monitoring systems required under this part for monitoring of SO_2, NO_X, CO_2, opacity, and volumetric flow are installed and all certification tests are completed not later than the earlier of 45 unit operating days or 180 calendar days after the date that the unit recommences commercial operation of the affected unit, notice of which date shall be provided under subpart G of this part. The owner or operator shall determine and report SO_2 concentration, NO_X emission rate, CO_2 concentration, and flow data for all unit operating hours after the applicable compliance date in paragraph (a) of this section until all required certification tests are successfully completed using either:

(1) The maximum potential concentration of SO_2, the maximum potential NO_X emission rate, the maximum potential flow rate, as defined in section 2.1 of appendix A of this part, or the maximum CO_2 concentration used to determine the maximum potential concentration of SO_2 in section 2.1.1.1 of appendix A of this part; or

(2) Reference methods under §75.22(b); or

(3) Another procedure approved by the Administrator pursuant to a petition under §75.66.

[§75.4(d) revised at 60 FR 26513, May 17, 1995]

[New §75.4(e)—(g) added at 60 FR 26513, May 17, 1995]

(e) In accordance with §75.20, if the owner or operator of an existing unit completes construction of a new stack, flue, or flue gas desulfurization system after the applicable deadline in paragraph (a) of this section, then the owner or operator shall ensure that all monitoring systems required under this part for monitoring SO_2, NO_X, CO_2, opacity, and volumetric flow are installed on the new stack or duct and all certification tests are completed not later than 90

Copyright 1993-1997, The Bureau of National Affairs, Inc.

calendar days after the date that emissions first exit to the atmosphere through the new stack, flue, or flue gas desulfurization system, notice of which date shall be provided under subpart G of this part. Until emissions first pass through the new stack, flue or flue gas desulfurization system, the unit is subject to the appropriate deadline in paragraph (a) of this section. The owner or operator shall determine and report SO_2 concentration, NO_X emission rate, CO_2 concentration, and flow data for all unit operating hours after emissions first pass through the new stack, flue, or flue gas desulfurization system until all required certification tests are successfully completed using either:

(1) The appropriate value for substitution of missing data upon recertification pursuant to §75.20(b)(3); or

(2) Reference methods under §75.22(b) of this part; or

(3) Another procedure approved by the Administrator pursuant to a petition under §75.66.

(f) In accordance with §75.20, the owner or operator of a gas-fired or oil- fired peaking unit, if planning to use appendix E of this part, shall ensure that the required certification tests for excepted monitoring systems under appendix E are completed for backup fuel as defined in §72.2 of this chapter by no later than the later of: 30 unit operating days after the date that the unit first combusted that backup fuel after the certification testing of the primary fuel; or The deadline in paragraph (a) of this section. The owner or operator shall determine and report NO_X emission rate data for all unit operating hours that the backup fuel is combusted after the applicable compliance date in paragraph (a) of this section until all required certification tests are successfully completed using either:

(1) The maximum potential NO_X emission rate; or

(2) Reference methods under §75.22(b) of this part; or

(3) Another procedure approved by the Administrator pursuant to a petition under §75.66.

(g) In accordance with §75.20, whenever the owner or operator of a gas-fired or oil-fired unit uses an excepted monitoring system under appendix D or E of this part and combusts emergency fuel as defined in §72.2 of this chapter, then the owner or operator shall ensure that a fuel flowmeter measuring emergency fuel is installed and the required certification tests for excepted monitoring systems are completed by no later than 30 unit operating days after the first date after January 1, 1995 that the unit combusts emergency fuel. For all unit operating hours that the unit combusts emergency fuel after January 1, 1995 until the owner or operator installs a flowmeter for emergency fuel and successfully completes all required certification tests, the owner or operator shall determine and report SO_2 mass emission data using either:

(1) The maximum potential fuel flow rate, as described in appendix D of this part, and the maximum sulfur content of the fuel, as described in section 2.1.1.1 of appendix A of this part;

(2) Reference methods under §75.22(b) of this part; or

Copyright 1993-1997, The Bureau of National Affairs, Inc.

(3) Another procedure approved by the Administrator pursuant to a petition under §75.66.

(h) In accordance with §75.20, the owner or operator of a unit with a qualifying Phase I technology shall ensure that all certification tests for the inlet and outlet SO_2-diluent continuous emission monitoring systems are completed no later than January 1, 1997 if the unit with a qualifying Phase I technology requires the use of an inlet SO_2-diluent continuous emission monitoring system for the purpose of monitoring SO_2 emissions removal from January 1, 1997 through December 31, 1999.

[Former §75.4(e) revised and redesignated as (h) at 60 FR 26513, May 17, 1995]

40 CFR 75.5 Prohibitions.

(a) A violation of any applicable regulation in this part by the owners or operators or the designated representative of an affected source or an affected unit is a violation of the Act.

(b) No owner or operator of an affected unit shall operate the unit without complying with the requirements of §§75.2 through 75.67 and appendices A through I of this part.

[§75.5(b) corrected at 58 FR 40746, July 30, 1993]

(c) No owner or operator of an affected unit shall use any alternative monitoring system, alternative reference method, or any other alternative for the required continuous emission monitoring system without having obtained the Administrator's prior written approval in accordance with §§75.23, 75.48 and 75.66.

(d) No owner or operator of an affected unit shall operate the unit so as to discharge, or allow to be discharged, emissions of SO_2, NO_x, or CO_2 to the atmosphere without accounting for all such emissions in accordance with the provisions of §§75.10 through 75.18.

(e) No owner or operator of an affected unit shall disrupt the continuous emission monitoring system, any portion thereof, or any other approved emission monitoring method, and thereby avoid monitoring and recording SO_2, NO_x, or CO_2 emissions discharged to the atmosphere, except for periods of recertification, or periods when calibration, quality assurance, or maintenance is performed pursuant to §75.21 and appendix B of this part.

[§75.5(e) revised at 60 FR 26513, May 17, 1995]

(f) No owner or operator of an affected unit shall retire or permanently discontinue use of the continuous emission monitoring system, any component thereof, the continuous opacity monitoring system, or any other approved emission monitoring system under this part, except under any one of the following circumstances:

(1) During the period that the unit is covered by an approved retired unit exemption under

Copyright 1993-1997, The Bureau of National Affairs, Inc.

§72.8 of this chapter that is in effect; or

(2) The owner or operator is monitoring emissions from the unit with another certified monitoring system that provides emission data for the same pollutant or parameter as the retired or discontinued monitoring system; or

(3) The designated representative submits notification of the date of recertification testing of a replacement monitoring system in accordance with §§75.20 and 75.61, and the owner or operator recertifies thereafter a replacement monitoring system in accordance with §75.20.

[§75.5(f) added at 60 FR 26513, May 17, 1995]

40 CFR 75.6 Incorporation by reference.

The materials listed in this section are incorporated by reference in the corresponding sections noted. These incorporations by reference were approved by the Director of the Federal Register in accordance with 5 U.S.C. 552(a) and 1 CFR part 51. These materials are incorporated as they existed on the date of approval, and a notice of any change in these materials will be published in the **Federal Register** . The materials are available for purchase at the corresponding address noted below and are available for inspection at the Office of the Federal Register, 800 N. Capitol Street, NW., Washington, DC, at the Public Information Reference Unit of the U.S. EPA, 401 M Street, SW., Washington, DC and at the Library (MD-35), U.S. EPA, Research Triangle Park, North Carolina.

(a) The following materials are available for purchase from the following addresses: American Society for Testing and Material (ASTM), 1916 Race Street, Philadelphia, Pennsylvania 19103; and the University Microfilms International 300 North Zeeb Road, Ann Arbor, Michigan 48106.

(1) ASTM D129-91, Standard Test Method for Sulfur in Petroleum Products (General Bomb Method), for appendices A and D of this part.

(2) ASTM D240-87 (Reapproved 1991), Standard Test Method for Heat of Combustion of Liquid Hydrocarbon Fuels by Bomb Calorimeter, for appendices A, D and F of this part.

(3) ASTM D287-82 (Reapproved 1987), Standard Test Method for API Gravity of Crude Petroleum and Petroleum Products (Hydrometer Method), for appendix Dof this part.

(4) ASTM D388-92, Standard Classification of Coals by Rank, incorporation by reference for appendix F of this part.

[§75.6(a)(4) corrected at 58 FR 40746, July 30, 1993]

(5) ASTM D941-88, Standard Test Method for Density and Relative Density (Specific Gravity) of Liquids by Lipkin Bicapillary Pycnometer, for appendix D of this part.

(6) ASTM D1072-90, Standard Test Method for Total Sulfur in Fuel Gases, for appendix D of this part.

Copyright 1993-1997, The Bureau of National Affairs, Inc.

(7) ASTM D1217-91, Standard Test Method for Density and Relative Density (Specific Gravity) of Liquids by Bingham Pycnometer, for appendix D of this part.

(8) ASTM D1250-80 (Reapproved 1990), Standard Guide for Petroleum Measurement Tables, for appendix D of this part.

(9) ASTM D1298-85 (Reapproved 1990), Standard Practice for Density, Relative Density (Specific Gravity) or API Gravity of Crude Petroleum and Liquid Petroleum Products by Hydrometer Method, for appendix D of this part.

(10) ASTM D1480-91, Standard Test Method for Density and Relative Density (Specific Gravity) of Viscous Materials by Bingham Pycnometer, for appendix D of this part.

(11) ASTM D1481-91, Standard Test Method for Density and Relative Density (Specific Gravity) of Viscous Materials by Lipkin Bicapillary Pycnometer, for appendix D of this part.

(12) ASTM D1552-90, Standard Test Method for Sulfur in Petroleum Products (High Temperature Method), for appendices A and D of the part.

[§75.6(a)(12) corrected at 58 FR 34126, June 23, 1993]

(13) ASTM D1826-88, Standard Test Method for Calorific (Heating) Value of Gases in Natural Gas Range by Continuous Recording Calorimeter, for appendix F of this part.

(14) ASTM D1945-91, Standard Test Method for Analysis of Natural Gas by Gas Chromatography, for appendices F and G of this part.

(15) ASTM D1946-90, Standard Practice for Analysis of Reformed Gas by Gas Chromatography, for appendices F and G of this part.

(16) ASTM D1989-92, Standard Test Method for Gross Calorific Value of Coal and Coke by Microprocessor Controlled Isoperibol Calorimeters, for appendix F of this part.

(17) ASTM D2013-86, Standard Method of Preparing Coal Samples for Analysis, for §75.15 and appendix F of this part.

(18) ASTM D2015-91, Standard Test Method for Gross Calorific Value of Coal and Coke by the Adiabatic Bomb Calorimeter, for §75.15 and appendices AD and F of this part.

(19) ASTM D2234-89, Standard Test Methods for Collection of a Gross Sample of Coal, for §75.15 and appendix F of this part.

(20) ASTM D2382-88, Standard Test Method for Heat of Combustion of Hydrocarbon Fuels by Bomb Calorimeter (High-Precision Method), for appendices D and F of this part.

(21) ASTM D2502-87, Standard Test Method for Estimation of Molecular Weight (Relative

Copyright 1993-1997, The Bureau of National Affairs, Inc.

Molecular Mass) of Petroleum Oils from Viscosity Measurements, for appendix G of this part.

(22) ASTM D2503-82 (Reapproved 1987), Standard Test Method for Molecular Weight (Relative Molecular Mass) of Hydrocarbons by Thermoelectric Measurement of Vapor Pressure, for appendix G of this part.

(23) ASTM D2622-92, Standard Test Method for Sulfur in Petroleum Products by X-Ray Spectrometry, for appendices A and D of this part.

(24) ASTM D3174-89, Standard Test Method for Ash in the Analysis Sample of Coal and Coke From Coal, for appendix G of this part.

(25) ASTM D3176-89, Standard Practice for Ultimate Analysis of Coal and Coke, for appendices A and F of this part.

(26) ASTM D3177-89, Standard Test Methods for Total Sulfur in the Analysis Sample of Coal and Coke, for §75.15 and appendix A of this part.

(27) ASTM D3178-89, Standard Test Methods for Carbon and Hydrogen in the Analysis Sample of Coal and Coke, for appendix G of this part.

(28) ASTM D3238-90, Standard Test Method for Calculation of Carbon Distribution and Structural Group Analysis of Petroleum Oils by the n-d-M Method, for appendix G of this part.

(29) ASTM D3246-81 (Reapproved 1987), Standard Test Method for Sulfur in Petroleum Gas By Oxidative Microcoulometry, for appendix D of this part.

(30) ASTM D3286-91a, Standard Test Method for Gross Calorific Value of Coal and Coke by the Isoperibol Bomb Calorimeter, for appendix F of this part.

(31) ASTM D3588-91, Standard Practice for Calculating Heat Value, Compressibility Factor, and Relative Density (Specific Gravity) of Gaseous Fuels, for appendix F of this part.

(32) ASTM D4052-91, Standard Test Method for Density and Relative Density of Liquids by Digital Density Meter, for appendix D of this part.

(33) ASTM D4057-88, Standard Practice for Manual Sampling of Petroleum and Petroleum Products, for appendix D of this part.

(34) ASTM D4177-82 (Reapproved 1990), Standard Practice for Automatic Sampling of Petroleum and Petroleum Products, for appendix D of this part.

(35) ASTM D4239-85, Standard Test Methods for Sulfur in the Analysis Sample of Coal and Coke Using High Temperature Tube Furnace Combustion Methods, for §75.15 and appendix A of this part.

(36) ASTM D4294-90, Standard Test Method for Sulfur in Petroleum Products by

Copyright 1993-1997, The Bureau of National Affairs, Inc.

Energy-Dispersive X-Ray Fluorescence Spectroscopy, for appendices A and D of this part.

(37) ASTM D4468-85 (Reapproved 1989), Standard Test Method for Total Sulfur in Gaseous Fuels by Hydrogenolysis and Rateometric Colorimetry, for appendix D of this part .

(38) ASTM D4891-89, Standard Test Method for Heating Value of Gases in Natural Gas Range by Stoichiometric Combustion, for appendix F of this part.

(39) ASTM D5291-92, Standard Test Methods for Instrumental Determination of Carbon, Hydrogen, and Nitrogen in Petroleum Products and Lubricants, for appendix G of this part.

(40) ASTM D5504-94, Standard Test Method for Determination of Sulfur Compounds in Natural Gas and Gaseous Fuels by Gas Chromatography and Chemiluminescence, for appendix D of this part.

[§75.6(a) revised at 60 FR 26513, May 17, 1995]

(b) The following materials are available for purchase from the American Society of Mechanical Engineers (ASME), 22 Law Drive, Box 2350, Fairfield, NJ 07007-2350.

[§75.6(b)(1)—(6) revised at 60 FR 26513, May 17, 1995]

(1) ASME MFC-3M-1989 with September 1990 Errata, Measurement of Fluid Flow in Pipes Using Orifice, Nozzle, and Venturi, for §75.20 and appendix D of this part.

(2) ASME MFC-4M-1986 (Reaffirmed 1990), Measurement of Gas Flow by Turbine Meters, for §75.20 and appendix D of this part.

(3) ASME-MFC-5M-1985, Measurement of Liquid Flow in Closed Conduits Using Transit-Time Ultrasonic Flowmeters, for §75.20 and appendix D of this part.

(4) ASME MFC-6M-1987 with June 1987 Errata, Measurement of Fluid Flow in Pipes Using Vortex Flow Meters, for §75.20 and appendix D of this part .

(5) ASME MFC-7M-1987 (Reaffirmed 1992), Measurement of Gas Flow by Means of Critical Flow Venturi Nozzles, for §75.20 and appendix D of this part.

(6) ASME MFC-9M-1988 with December 1989 Errata, Measurement of Liquid Flow in Closed Conduits by Weighing Method, for §75.20 and appendix D of this part.

(7)-(9) [Removed]

[§75.6(b)(7)—(9) removed at 60 FR 26513, May 17, 1995]

(c) The following materials are available for purchase from the American National Standards Institute (ANSI), 11 W. 42nd Street, New York NY 10036: ISO 8316: 1987(E) Measurement of Liquid Flow in Closed Conduits—Method by Collection of the Liquid in a Volumetric Tank, for

Copyright 1993-1997, The Bureau of National Affairs, Inc.

§75.20 and appendices D and E of this part.

[§75.6(c) added at 60 FR 26513, May 17, 1995]

(d) The following materials are available for purchase from the following address: Gas Processors Association (GPA), 6526 East 60th Street, Tulsa, Oklahoma 74145:

(1) GPA Standard 2172-86, Calculation of Gross Heating Value, Relative Density and Compressibility Factor for Natural Gas Mixtures from Compositional Analysis, for appendices D, E, and F of this part.

(2) GPA Standard 2261-90, Analysis for Natural Gas and Similar Gaseous Mixtures by Gas Chromatography, for appendices D, F, and G of this part.

[§75.6(d) added at 60 FR 26513, May 17, 1995]

(e) The following materials are available for purchase from the following address: American Gas Association, 1515 Wilson Boulevard, Arlington VA 22209:

(1) American Gas Association Report No. 3: Orifice Metering of Natural Gas and Other Related Hydrocarbon Fluids, Part 1: General Equations and Uncertainty Guidelines (October 1990 Edition), Part 2: Specification and Installation Requirements (February 1991 Edition) and Part 3: Natural Gas Applications (August 1992 Edition), for §75.20 and appendices D and E of this part.

(2) American Gas Association Transmission Measurement Committee Report No. 7: Measurement of Gas by Turbine Meters (1985 Edition), for §75.20 and appendix D of this part.

[§75.6(e) added at 60 FR 26513, May 17, 1995; revised at 61 FR 59157, Nov. 20, 1996]

40 CFR 75.7 EPA Study.

The Agency will initiate rulemaking to adjust the equations in the bias test by an amount sufficient to compensate for reference method variance based on a study, which EPA shall complete by October 31, 1993, unless the Administrator determines that adjustments are technically unnecessary or infeasible to properly determine bias.

[§75.7 corrected at 58 FR 40746, July 30, 1993]

40 CFR 75.8 Relative accuracy and availability analysis.

[§75.8 added at 60 FR 26513, May 17, 1995]

(a) The Agency will conduct an analysis of monitoring data submitted to EPA under this part between November 15, 1993 and December 31, 1996 to evaluate the appropriateness of the current performance specifications for relative accuracy and availability trigger conditions for missing data substitution for SO_2 and CO_2 pollutant concentration monitors, flow monitors, and

Copyright 1993-1997, The Bureau of National Affairs, Inc.

NO_X continuous emission monitoring systems.

(b) Prior to July 1, 1997, the Agency will prepare a report evaluating quarterly report data for the period between January 1, 1994 and December 31, 1996 and initial certification test data. Based upon this evaluation, the Administrator will sign for publication in the **Federal Register**, either:

(1) A notice that the Agency has completed its analysis and has determined that retaining the current performance specifications for relative accuracy and availability trigger conditions are appropriate; or

(2) A notice that the Agency will develop a proposed rule, based on the results of the study, proposing alternatives to the current performance specifications for relative accuracy and availability trigger conditions.

(c) If the Administrator signs a notice that the Agency will develop a proposed rule, the Administrator will:

(1) Sign a notice of proposed rulemaking by October 31, 1997; and

(2) Sign a notice of final rulemaking by October 31, 1998.

Subpart B—Monitoring Provisions

40 CFR 75.10 General operating requirements.

(a) *Primary Measurement Requirement.* The owner or operator shall measure opacity, and all SO_2, NO_x, and CO_2 emissions for each affected unit as follows:

[§75.10(a)(1)—(3) revised at 60 FR 26513, May 17, 1995]

(1) The owner or operator shall install, certify, operate, and maintain, in accordance with all the requirements of this part, a SO_2 continuous emission monitoring system and a flow monitoring system with the automated data acquisition and handling system for measuring and recording SO_2 concentration (in ppm), volumetric gas flow (in scfh), and SO_2 mass emissions (in lb/hr) discharged to the atmosphere, except as provided in §§75.11 and 75.16 and subpart E of this part;

(2) The owner or operator shall install, certify, operate, and maintain, in accordance with all the requirements of this part, a NO_X continuous emission monitoring system (consisting of a NO_X pollutant concentration monitor and an O_2 or CO_2 diluent gas monitor) with the automated data acquisition and handling system for measuring and recording NO_X concentration (in ppm), O_2 or CO_2 concentration (in percent O_2 or CO_2) and NO_X emission rate (in lb/mmBtu) discharged to

Copyright 1993-1997, The Bureau of National Affairs, Inc.

the atmosphere, except as provided in §§75.12 and 75.17 and subpart E of this part. The owner or operator shall account for total NO_X emissions, both NO and NO_2, either by monitoring for both NO and NO_2 or by monitoring for NO only and adjusting the emissions data to account for NO_2;

(3) The owner or operator shall determine CO_2 emissions by using one of the following options, except as provided in §75.13 and subpart E of this part:

(i) The owner or operator shall install, certify, operate, and maintain, in accordance with all the requirements of this part, a CO_2 continuous emission monitoring system and a flow monitoring system with the automated data acquisition and handling system for measuring and recording CO_2 concentration (in ppm or percent), volumetric gas flow (in scfh), and CO_2 mass emissions (in tons/hr) discharged to the atmosphere;

(ii) The owner or operator shall determine CO_2 emissions based on the measured carbon content of the fuel and the procedures in appendix G of this part to estimate CO_2 emissions (in ton/day) discharged to the atmosphere; or

(iii) The owner or operator shall install, certify, operate, and maintain, in accordance with all the requirements of this part, a flow monitoring system and a CO_2 continuous emission monitoring system using an O_2 concentration monitor in order to determine CO_2 emissions using the procedures in appendix F of this part with the automated data acquisition and handling system for measuring and recording O_2 concentration (in percent), CO_2 concentration (in percent), volumetric gas flow (in scfh), and CO_2 mass emissions (in tons/hr) discharged to the atmosphere; and

(4) The owner or operator shall install, certify, operate, and maintain, in accordance with all the requirements in this part, a continuous opacity monitoring system with the automated data acquisition and handling system for measuring and recording the opacity of emissions (in percent opacity) discharged to the atmosphere, except as provided in §§75.14 and 75.18.

(b) *Primary Equipment Performance Requirements.* The owner or operator shall ensure that each continuous emission monitoring system required by this part meets the equipment, installation, and performance specifications in Appendix A to this part ; and is maintained according to the quality assurance and quality control procedures in Appendix B to this part; and shall record SO_2 and NO_x emissions in the appropriate units of measurement (i.e., lb/hr for SO_2 and lb/mmBtu for NO_x).

(c) *Heat Input Measurement Requirement.* The owner or operator shall determine and record the heat input to each affected unit for every hour or part of an hour any fuel is combusted following the procedures in Appendix F to this part.

Copyright 1993-1997, The Bureau of National Affairs, Inc.

[§75.10(d)—(f) revised at 60 FR 26513, May 17, 1995]

(d) *Primary equipment hourly operating requirements.* The owner or operator shall ensure that all continuous emission and opacity monitoring systems required by this part are in operation and monitoring unit emissions or opacity at all times that the affected unit combusts any fuel except as provided in §75.11(e) and during periods of calibration, quality assurance, or preventive maintenance, performed pursuant to §75.21 and appendix B of this part, periods of repair, periods of backups of data from the data acquisition and handling system, or recertification performed pursuant to §75.20. The owner or operator shall also ensure, subject to the exceptions above in this paragraph, that all continuous opacity monitoring systems required by this part are in operation and monitoring opacity during the time following combustion when fans are still operating, unless fan operation is not required to be included under any other applicable Federal, State, or local regulation, or permit. The owner or operator shall ensure that the following requirements are met:

(1) The owner or operator shall ensure that each continuous emission monitoring system and component thereof is capable of completing a minimum of one cycle of operation (sampling, analyzing, and data recording) for each successive 15-min interval. The owner or operator shall reduce all SO_2 concentrations, volumetric flow, SO_2 mass emissions, SO_2 emission rate in lb/mmBtu (if applicable), CO_2 concentration, O_2 concentration, CO_2 mass emissions (if applicable), NO_X concentration, and NO_X emission rate data collected by the monitors to hourly averages. Hourly averages shall be computed using at least one data point in each fifteen minute quadrant of an hour, where the unit combusted fuel during that quadrant of an hour. Notwithstanding this requirement, an hourly average may be computed from at least two data points separated by a minimum of 15 minutes (where the unit operates for more than one quadrant of an hour) if data are unavailable as a result of the performance of calibration, quality assurance, or preventive maintenance activities pursuant to §75.21 and appendix B of this part, backups of data from the data acquisition and handling system, or recertification, pursuant to §75.20. The owner or operator shall use all valid measurements or data points collected during an hour to calculate the hourly averages. All data points collected during an hour shall be, to the extent practicable, evenly spaced over the hour.

(2) The owner or operator shall ensure that each continuous opacity monitoring system is capable of completing a minimum of one cycle of sampling and analyzing for each successive 10-sec period and one cycle of data recording for each successive 6-min period. The owner or operator shall reduce all opacity data to 6-min averages calculated in accordance with the provisions of part 51, appendix M of this chapter, except where the applicable State implementation plan or operating permit requires a different averaging period, in which case the State requirement shall satisfy this Acid Rain Program requirement.

(3) Failure of an SO_2, CO_2 or O_2 pollutant concentration monitor, flow monitor, or NO_X continuous emission monitoring system, to acquire the minimum number of data points for

Copyright 1993-1997, The Bureau of National Affairs, Inc.

calculation of an hourly average in paragraph (d)(1) of this section, shall result in the failure to obtain a valid hour of data and the loss of such component data for the entire hour. An hourly average NO_X or SO_2 emission rate in lb/mmBtu is valid only if the minimum number of data points are acquired by both the pollutant concentration monitor (NO_X or SO_2) and the diluent monitor (CO_2 or O_2). Except for SO_2 emission rate data in lb/mmBtu, if a valid hour of data is not obtained, the owner or operator shall estimate and record emission or flow data for the missing hour by means of the automated data acquisition and handling system, in accordance with the applicable procedure for missing data substitution in subpart D of this part.

(e) *Optional backup monitor requirements.* If the owner or operator chooses to use two or more continuous emission monitoring systems, each of which is capable of monitoring the same stack or duct at a specific affected unit, or group of units using a common stack, then the owner or operator shall designate one monitoring system as the primary monitoring system, and shall record this information in the monitoring plan, as provided for in §75.53. The owner or operator shall designate the other monitoring system(s) as backup monitoring system(s) in the monitoring plan. The backup monitoring system(s) shall be designated as redundant backup monitoring system(s), non-redundant backup monitoring system(s), or reference method backup system(s), as described in §75.20(d). When the certified primary monitoring system is operating and not out-of-control as defined in §75.24, only data from the certified primary monitoring system shall be reported as valid, quality-assured data. Thus, data from the backup monitoring system may be reported as valid, quality-assured data only when the backup is operating and not out-of-control as defined in §75.24 (or in the applicable reference method in appendix A of part 60 of this chapter) and when the certified primary monitoring system is not operating (or is operating but out-of- control). A particular monitor may be designated both as a certified primary monitor for one unit and as a certified redundant backup monitor for another unit.

(f) *Minimum measurement capability requirement.* The owner or operator shall ensure that each continuous emission monitoring system and component thereof is capable of accurately measuring, recording, and reporting data, and shall not incur a full scale exceedance, except as provided in sections 2.1.1.4, 2.1.2.4, and 2.1.4 of appendix A of this part.

(g) Minimum Recording and Reporting Requirements. The owner or operator shall record and the designated representative shall report the hourly, daily, quarterly, and annual information collected under the requirements of this part as specified in subparts F and G of this part.

40 CFR 75.11 Specific provisions for monitoring SO_2 emissions (SO_2 and flow monitors).

(a) *Coal-fired units.* The owner or operator shall meet the general operating requirements in §75.10 for an SO_2 continuous emission monitoring system and a flow monitoring system for each affected coal-fired unit while the unit is combusting coal and/or any other fuel, except as provided in paragraph (e) of this section, in §75.16 , and in subpart E of this part. During hours in which

Copyright 1993-1997, The Bureau of National Affairs, Inc.

only natural gas or gaseous fuel with a sulfur content no greater than natural gas (i.e., >20 grains per 100 standard cubic feet (gr/100 scf) is combusted in the unit, the owner or operator shall comply with the applicable provisions of paragraph (e)(1) , (e)(2), or (e)(3) of this section.

[§75.11(a) amended at 60 FR 26566, May 17, 1995; revised at 61 FR 59157, Nov. 20, 1996]

(b) *Moisture correction.* Where SO_2 concentration is measured on a dry basis, the owner or operator shall either:

(1) Install, operate, and maintain a continuous moisture monitor for measuring and recording the moisture content of the flue gases; or

(2) Determine the moisture content of the flue gases continuously (or on an hourly basis) and correct the measured hourly volumetric flow rates for moisture when calculating SO_2 mass emissions (in lb/hr) using the procedures in appendix F of this part.

(c) *Unit with no location for a flow monitor meeting siting requirements.* Where no location exists that satisfies the minimum physical siting criteria in appendix A to this part for installation of a flow monitor in either the stack or the ducts serving an affected unit or installation of a flow monitor in either the stack or ducts is demonstrated to the satisfaction of the Administrator to be technically infeasible, either:

(1) The designated representative shall petition the Administrator for an alternative method for monitoring volumetric flow in accordance with §75.66; or

(2) The owner or operator shall construct a new stack or modify existing ductwork to accommodate the installation of a flow monitor, and the designated representative shall petition the Administrator for an extension of the required certification date given in §75.4 and approval of an interim alternative flow monitoring methodology in accordance with §75.66. The Administrator may grant existing Phase I affected units an extension to January 1, 1995, and existing Phase II affected units an extension to January 1, 1996 for the submission of the certification application for the purpose of constructing a new stack or making substantial modifications to ductwork for installation of a flow monitor; or

(3) The owner or operator shall install a flow monitor in any existing location in the stack or ducts serving the affected unit at which the monitor can achieve the performance specifications of this part.

[§75.11(c) corrected at 58 FR 40746, July 30, 1993; revised at 60 FR 26513, May 17, 1995]

(d) *Gas-fired and oil-fired units.* The owner or operator of an affected unit that qualifies as a gas-fired or oil-fired unit, as defined in §72.2 of this chapter, based on information submitted by the designated representative in the monitoring plan, shall measure and record SO_2 emissions:

(1) By meeting the general operating requirements in §75.10 for an SO_2 continuous emission

Copyright 1993-1997, The Bureau of National Affairs, Inc.

monitoring system and flow monitoring system. If this option is selected, the owner or operator shall comply with the applicable provisions in paragraph (e)(1), (e)(2) , or (e)(3) of this section during hours in which the unit combusts only natural gas (or gaseous fuel with a sulfur content no greater than natural gas); or

(2) By providing other information satisfactory to the Administrator using the applicable procedures specified in appendix D of this part for estimating hourly SO_2 mass emissions. Appendix D shall not, however, be used when the unit combusts gaseous fuel with a sulfur content greater than natural gas (i.e., ≤ 20 gr/100 scf); when such fuel is burned, the owner or operator shall comply with the provisions of paragraph (e)(4) of this section.

[§75.11(d) revised at 60 FR 26513, May 17, 1995; 61 FR 59157, Nov. 20, 1996]

(e) Units with SO_2 continuous emission monitoring systems during the combustion of gaseous fuel. The owner or operator of an affected unit with an SO_2 continuous emission monitoring system shall, during any hours in which the unit combusts only gaseous fuel, determine SO_2 emissions in accordance with paragraph (e)(1), (e)(2), (e)(3) or (e)(4) of this section, as applicable.

(1) When pipeline natural gas is burned in the unit, the owner or operator may, in lieu of operating and recording data from the SO_2 monitoring system, determine SO_2 emissions by using the heat input calculated using a certified flow monitoring system and a certified diluent monitor, in conjunction with the default SO_2 emission rate for pipeline natural gas from section 2.3.2 of appendix D of this part, and Equation F-23 in appendix F of this part. When this option is chosen, the owner or operator shall perform the necessary data acquisition and handling system tests under §75.20(c), and shall meet all quality control and quality assurance requirements in appendix B of this part for the flow monitor and the diluent monitor.

(2) When gaseous fuel with a sulfur content no greater than natural gas (i.e., ≤20 gr/100 scf) is combusted in the unit, the owner or operator may, in lieu of operating and recording data from the SO_2 monitoring system, determine SO_2 emissions by certifying an excepted monitoring system in accordance with §75.20 and with appendix D of this part, by following the fuel sampling and analysis procedures in section 2.3.1 of appendix D of this part , by meeting the recordkeeping requirements of §75.55, and by meeting all quality control and quality assurance requirements for fuel flowmeters in appendix D of this part. If this compliance option is selected, the hourly unit heat input reported under §75.54(b)(5) shall be determined using a certified flow monitoring system and a certified diluent monitor, in accordance with the procedures in section 5.2 of appendix F of this part. The flow monitor and diluent monitor shall meet all of the applicable quality control and quality assurance requirements of appendix B of this part.

(3) When gaseous fuel with a sulfur content no greater than natural gas (i.e., ≤20 gr/100 scf) is burned in the unit, the owner or operator may determine SO_2 mass emissions by using a certified

Copyright 1993-1997, The Bureau of National Affairs, Inc.

SO_2 continuous monitoring system, in conjunction with a certified flow rate monitoring system. However, on and after January 1, 1999, the SO_2 monitoring system shall be subject to the following provisions; prior to January 1, 1999, the owner or operator may comply with these provisions:

(i) When conducting the daily calibration error tests of the SO_2 monitoring system, as required by section 2.1.1 in appendix B of this part , the zero-level calibration gas shall have an SO_2 concentration of 0.0 percent of span. This restriction does not apply if gaseous fuel is burned in the affected unit only during unit startup.

(ii) The zero-level calibration response of the SO_2 monitoring system shall be adjusted, either automatically or manually, to read exactly 0.0 ppm SO_2 following each successful daily calibration error test conducted in accordance with section 2.1.1 in appendix B of this part . This calibration adjustment is optional if gaseous fuel is burned in the affected unit only during unit startup.

(iii) Any hourly average SO_2 concentration of less than 2.0 ppm recorded by the SO_2 monitoring system shall be adjusted to a default value of 2.0 ppm, for reporting purposes. Such adjusted hourly averages shall be considered to be quality- assured data, provided that the monitoring system is operating and is not out-of- control with respect to any of the quality assurance tests required by appendix B of this part (i.e., daily calibration error, linearity and relative accuracy test audit).

(iv) Notwithstanding the requirements of sections 2.1.1.1 and 2.1.1.2 of appendix A of this part, a second, low-scale measurement range is not required for units that sometimes burn natural gas (or gaseous fuel with a sulfur content no greater than naturalgas) and at other times burn higher-sulfur fuel(s) such as coal or oil. For units that burn only natural gas (or gaseous fuel with a sulfur content no greater than natural gas) and burn no other type(s) of fuel(s), the owner or operator shall set the span of the SO_2 monitoring system to a value no greater than 200 ppm.

(4) During any hours in which a unit combusts only gaseous fuel(s) with a sulfur content greater than natural gas (i.e., >20 gr/100 scf), the owner or operator shall meet the general operating requirements in §75.10 for an SO_2 continuous emission monitoring system and a flow monitoring system.

[§75.11(e) added and reserved at 60 FR 26513, May 17, 1995; added at 60 FR 26566, May 17, 1995; revised at 61 FR 59157, Nov. 20, 1996]

(f) *Other units.* The owner or operator of an affected unit that combusts wood, refuse, or other material in addition to oil or gas shall comply with the monitoring provisions for coal-fired units specified in paragraph (a) of this section.

[Former §75.11(e) redesignated as new (f) at 60 FR 26513, May 17, 1995]

Copyright 1993-1997, The Bureau of National Affairs, Inc.

(g) [Reserved]

[§75.11(g) added at 60 FR 26566, May 17, 1995; removed at 61 FR 59157, Nov. 20, 1996]

40 CFR 75.12 Specific provisions for monitoring NO_x emissions (NO_x and diluent gas monitors).

(a) *Coal-fired units, gas-fired nonpeaking units or oil-fired nonpeaking units.* The owner or operator shall meet the general operating requirements in §75.10 of this part for a NO_x continuous emission monitoring system for each affected coal- fired unit, gas-fired nonpeaking unit, or oil-fired nonpeaking unit, except as provided in paragraph (c) of this section, §75.17, and in subpart E of this part. The diluent gas monitor in the NO_x continuous emission monitoring system may measure either O_2 or CO_2 concentration in the flue gases.

(b) *Determination of NO_x emission rate.* The owner or operator shall calculate hourly, quarterly, and annual NO_x emission rates (in lb/mmBtu) by combining the NO_x concentration (in ppm) and diluent concentration (in percent O_2 or CO_2) measurements according to the procedures in appendix F of this part.

(c) *Gas-fired peaking units or oil-fired peaking units.* The owner or operator of an affected unit that qualifies as a gas- fired peaking unit or oil-fired peaking unit, as defined in §72.2 of this chapter, based on information submitted by the designated representative in the monitoring plan shall comply with one of the following:

(1) Meet the general operating requirements in §75.10 for a NO_X continuous emission monitoring system; or

[§75.12(c)(1) corrected at 58 FR 34126, June 23, 1993]

(2) Provide information satisfactory to the Administrator using the procedure specified in appendix E of this part for estimating hourly NO_X emission rate. However, if in the years after certification of an excepted monitoring system under appendix E of this part , a unit's operations exceed a capacity factor of 20 percent in any calendar year or exceed a capacity factor of 10.0 percent averaged over three years, the owner or operator shall install, certify, and operate a NO_X continuous emission monitoring system no later than December 31 of the following calendar year.

[§75.12(c) revised at 60 FR 26513, May 17, 1995]

(d) *Other units.* The owner or operator of an affected unit that combusts wood, refuse, or other material in addition to oil or gas shall comply with the monitoring provisions specified in paragraph (a) of this section.

40 CFR 75.13 Specific provisions for monitoring CO_2 emissions.

Copyright 1993-1997, The Bureau of National Affairs, Inc.

(a) *CO_2* continuous emission monitoring system. If the owner or operator chooses to use the continuous emission monitoring method, then the owner or operator shall meet the general operating requirements in §75.10 for a CO_2continuous emission monitoring system and flow monitoring system for each affected unit. The owner or operator shall comply with the applicable provisions specified in §75.11(a) through (e) or §75.16, except that the phrase "SO_2 continuous emission monitoring system" is replaced with "CO_2 continuous emission monitoring system," the term "maximum potential concentration for SO_2" is replaced with "maximum CO_2 concentration," and the phrase "SO_2 mass emissions" is replaced with "CO_2 mass emissions."

[§75.13(a) revised at 60 FR 26513, May 17, 1995]

(b) *Determination of CO_2 emissions using Appendix G of this part.*If the owner or operator chooses to use the appendix G method, then the owner or operator may provide information satisfactory to the Administrator for estimating daily CO_2 mass emissions based on the measured carbon content of the fuel and the amount of fuel combusted. For units with wet flue gas desulfurization systems or other add-on emissions controls generating CO_2, the owner or operator shall use the procedures in appendix G to this part to estimate both combustion-related emissions based on the measured carbon content of the fuel and the amount of fuel combusted and sorbent-related emissions based on the amount of sorbent injected. The owner or operator shall calculate daily, quarterly, and annual CO_2 mass emissions (in tons) in accordance with the procedures in appendix G to this part .

(c) *Determination of CO_2 mass emissions using an O_2monitor according to appendix F.* If the owner or operator chooses to use the appendix F method, then the owner or operator may determine hourly CO_2 concentration and mass emissions with a flow monitoring system, a continuous O_2 concentration monitor, fuel F and F_c factors, and where O_2 concentration is measured on a dry basis, hourly corrections for the moisture content of the flue gases, using the methods and procedures specified in appendix F to this part. For units using a common stack, multiple stack, or by-pass stack, the owner or operator may use the provisions of §75.16, except that the phrase SO_2 continuous emission monitoring system" is replaced with CO_2 continuous emission monitoring system," the term "maximum potential concentration of SO" is replaced with "maximum CO_2 concentration," and the phrase "SO_2 mass emissions" is replaced with "CO_2 mass emissions."

[§75.13(c) revised at 60 FR 26513, May 17, 1995]

40 CFR 75.14 Specific provisions for monitoring opacity.

(a) *Coal-fired units and oil-fired units.* The owner or operator shall meet the general operating provisions in §75.10 of this part for a continuous opacity monitoring system for each affected coal-fired or oil- fired unit, except as provided in paragraphs (b), (c), and (d) of this section and

Copyright 1993-1997, The Bureau of National Affairs, Inc.

in §75.18. Each continuous opacity monitoring system shall meet the design, installation, equipment, and performance specifications in Performance Specification 1 in appendix B to part 60 of this chapter. Any continuous opacity monitoring system previously certified to meet Performance Specification 1 shall be deemed certified for the purposes of this part.

(b) *Unit with wet flue gas pollution control system.* If the owner or operator can demonstrate that condensed water is present in the exhaust flue gas stream and would impede the accuracy of opacity measurements, then the owner or operator of an affected unit equipped with a wet flue gas pollution control system for SO_2 emissions or particulates is exempt from the opacity monitoring requirements of this part.

(c) *Gas-fired units.* The owner or operator of an affected unit that qualifies as gas-fired, as defined in §72.2 of this chapter, based on information submitted by the designated representative in the monitoring plan is exempt from the opacity monitoring requirements of this part. Whenever a unit previously categorized as a gas-fired unit is recategorized as another type of unit by changing its fuel mix, the owner or operator shall install, operate, and certify a continuous opacity monitoring system as required by paragraph (a) of this section by December 31 of the following calendar year.

[§75.14(c) revised at 60 FR 26513, May 17, 1995; 61 FR 25581, May 22, 1996]

(d) *Diesel-fired units and dual-fuel reciprocating engine units.* The owner or operator of an affected diesel-fired unit or a dual-fuel reciprocating engine unit is exempt from the opacity monitoring requirements of this part.

[§75.14(d) corrected at 58 FR 34126, June 23, 1993]

40 CFR 75.15 Specific provisions for monitoring SO_2 emissions removal by qualifying Phase I technology.

(a) *Additional monitoring provisions.* In addition to the SO_2 monitoring requirements in §75.11 or §75.16, for the purposes of adequately monitoring SO_2 emissions removal by qualifying Phase I technology operated pursuant to §72.42 of this chapter, the owner or operator shall, except where specified below, use both an inlet SO_2-diluent continuous emission monitoring system and an outlet SO_2-diluent continuous emission monitoring system, consisting of an SO_2 pollutant concentration monitor and a diluent CO_2 or O_2 monitor. (The outlet SO_2-diluent continuous emission monitoring system may consist of the same SO_2 pollutant concentration monitor that is required under §75.11 or §75.16 for the measurement of SO_2 emissions discharged to the atmosphere and the diluent monitor used as part of the NO_X continuous emission monitoring system that is required under §75.12 or §75.17 for the measurement of NO_X emissions discharged into the atmosphere.) During the period when required to measure emissions removal efficiency, from January 1, 1997 through December 31, 1999, the owner or operator

Copyright 1993-1997, The Bureau of National Affairs, Inc.

shall meet the general operating requirements in §75.10 for both the inlet and the outlet SO_2-diluent continuous emission monitoring systems, and in addition, the owner or operator shall comply with the monitoring provisions in this section. On January 1, 2000, the owner or operator may cease operating and/or reporting on the inlet SO_2-diluent continuous emission monitoring system results for the purposes of the Acid Rain Program.

[§75.15(a) introductory text corrected at 58 FR 40746, July 30, 1993; amended at 60 FR 26513, May 17, 1995]

(1) *Pre-combustion technology.* The owner or operator of an affected unit for which a precombustion technology has been employed for the purpose of meeting qualifying Phase I technology requirements shall use sections 4 and 5 of Method 19 in appendix A of part 60 of this chapter to estimate, daily, for the purposes of this part, the percentage SO_2 removal efficiency from such technology, and shall substitute the following ASTM methods for sampling, preparation, and analysis of coal for those cited in Method 19: ASTM D2234-89, Standard Test Method for Collection of a Gross Sample of Coal (Type I, Conditions A, B, or C and systematic spacing), ASTM D2013-86, Standard Method of Preparing Coal Samples for Analysis, ASTM D2015-91, Standard Test Method for Gross Calorific Value of Coal and Coke by the Adiabatic Calorimeter, and ASTM D3177-89, Standard Test Methods for Total Sulfur in the Analysis Sample of Coal and Coke, or ASTM D4239-85, Standard Test Method for Sulfur in the Analysis Sample of Coal and Coke Using High Temperature Tube Furnace Combustion Methods. Each of the preceding ASTM methods is incorporated by reference in §75.6.

[§75.15(a)(1) amended at 60 FR 26513, May 17, 1995]

(2) *Combustion technology.* The owner or operator of an affected unit for which a combustion technology has been installed and operated for the purpose of meeting qualifying Phase I technology requirements shall use the coal sampling and analysis procedures in paragraph (a)(1) of this section and Equation 5 in paragraph (b) of this section to estimate the percentage SO_2 removal efficiency from such technology.

[§75.15(a)(2) corrected at 58 FR 40746, July 30, 1993; amended at 60 FR 26513, May 17, 1995]

(3) *Post-combustion technology.* The owner or operator of an affected unit for which a post-combustion technology has been installed and operated for the purpose of meeting qualifying Phase I technology requirements shall install, certify, operate, and maintain both an inlet and an outlet SO_2-diluent continuous emission monitoring system.

(i) Both inlet and outlet SO_2-diluent continuous emission monitoring systems shall consist of an SO_2 pollutant concentration monitor and a diluent gas monitor for measuring the O_2 or CO_2 concentrations in the flue gas and shall measure and record average hourly SO_2 emission rates (in lb/mmBtu).

Copyright 1993-1997, The Bureau of National Affairs, Inc.

(ii) The SO_2-diluent continuous emission monitoring systems for measuring and recording the SO_2 emissions removal by a qualifying Phase I technology shall meet all the requirements of this part during the period when required to measure emissions removal, from January 1, 1997 through December 31, 1999, and shall meet the certification deadline specified in §75.4.

(iii) The SO_2 pollutant concentration monitors and the diluent gas monitors at the inlet and outlet of the SO_2 emission controls shall meet all requirements specified in appendices A and B to this part.

[§75.15(a)(3)(iii) corrected at 58 FR 34126, June 23, 1993]

(b) *Demonstration of SO_2 emissions removal efficiency.* The owner or operator shall demonstrate the average annual percentage SO_2 emissions removal efficiency of the installed technology or combination of technologies during the period when required to measure emissions removal, from January 1, 1997 through December 31, 1999, according to the following procedures:

[§75.15(b) corrected at 58 FR 34126, June 23, 1993]

(1) Calculate the average annual SO_2 emissions removal efficiency using Equations 1-7 as follows:

$$\%R=100[1.0-(1.0-\%R_f/100)\ (1.0-\%R_g/100)\ (1.0-\%R_c/100)]\quad \text{(Eq.1)}$$

where,

$\%R$ = Overall percentage SO_2 emissions removal efficiency.

$\%R_f$ = Percentage SO_2 emissions removal efficiency from fuel pretreatment, calculated from Equation 19-22 in Reference Method 19 in Appendix A to part 60 of this chapter.

$\%R_c$ = Percentage SO_2 emissions removal of combustion emission controls, calculated from Equation 5.

$\%R_g$ = Percentage SO_2 removal efficiency of post-combustion emission controls, calculated from Equation 2.

$$\%Rg = 100\ [1.0 - \frac{E_o}{E_i}]$$

Copyright 1993-1997, The Bureau of National Affairs, Inc.

(Eq.2)
where,
E_o=Average hourly SO_2 emission rate in lb/mmBtu, measured at the outlet of the post-combustion emission controls during the calendar year, calculated from Equation 3.
E_i=Average hourly SO_2 emission rate in lb/mmBtu, measured at the inlet to the post-combustion emission controls during the calendar year, calculated from Equation 4.

$$E_o = \frac{\sum_{j=1}^{n} E_{hoj}}{n}$$

(Eq. 3)
where,
E_{hoj}=Each hourly SO_2 emission rate in lb/mmBtu, measured by the continuous emission monitoring system at the outlet to the post-combustion emission controls.
n=Total unit operating hours during which the SO_2 continuous emission monitoring system at the outlet of the emission controls collected quality-assured data.

$$E_i = \frac{\sum_{j=1}^{m} E_{hij}}{m}$$

(Eq. 4)
where,
E_{hij}=Each hourly SO_2 emission rate in lb/mmBtu, measured by the continuous emission monitoring system at the inlet to the post-combustion emission controls.
m=Total unit operating hours during which the SO_2 continuous emission monitoring system at the inlet to the emission controls collected quality- assured data.

$$\%R_c = 100\left[1.0 - \frac{E_{co}}{E_{ci}}\right]$$

(Eq. 5)
where,

Copyright 1993-1997, The Bureau of National Affairs, Inc.

E_{co}=Average hourly SO_2 emission rate in lb/mmBtu, measured at the outlet of the combustion emission controls during the calendar year, calculated from Equation 6.

E_{ci}=Average hourly SO_2 emission rate in lb/mmBtu, determined by coal sampling and analysis according to the methods and procedures in paragraph (a)(1) of this section, calculated from Equation 7.

[§75.15(b)(1) Equation 5, corrected at 58 FR 40746, July 30, 1993; revised at 60 FR 26513, May 17, 1995]

$$E_{co} = \frac{\sum_{j=1}^{q} E_{ocj}}{q}$$

(Eq. 6)

where,

E_{ocj}=Each hourly SO_2 emission rate in lb/mmBtu, measured by the continuous emission monitoring system at the outlet to the combustion controls.

q=Total unit operating hours for which the outlet SO_2 continuous emission monitoring system collected quality- assured data during the calendar year.

$$E_{ci} = \frac{\sum_{j=1}^{p} E_{icj}}{p}$$

(Eq.

(Eq. 7)

where,

E_{icj}=Each hourly SO_2 emission rate in lb/mmBtu, determined by the coal sampling and analysis methods and procedures in paragraph (a)(1) of this section and calculated using apppendix A, Method 19 of part 60 of this chapeter, performed once a day.

p=Total unit operation hours during which coal and analysis is performed to determine SO_2 emissions at the inlet to the combustion controls.

[§75.15(b)(1) Equation 7, corrected at 58 FR 40746, July 30, 1993; revised at 60 FR 26513, May 17, 1995; amended at 61 FR 25582, May 22, 1996]

(2) The owner or operator shall include all periods when fuel is being combusted in determining

Copyright 1993-1997, The Bureau of National Affairs, Inc.

total unit operating hours for the purpose of calculating the average SO_2 emissions removal efficiency during the calendar year.

(3) The owner or operator shall use only quality-assured SO_2 emissions data in the calculation of SO_2 emissions removal efficiency.

(4) Compliance with the 90-percent SO_2 emissions removal efficiency requirement under this part is determined annually beginning January 1, 1997 through December 31, 1999.

40 CFR 75.16 Special provisions for monitoring emissions from common, by-pass, and multiple stacks for SO_2 emissions and heat input determinations.

[§75.16 revised at 60 FR 26513, May 17, 1995]

(a) *Phase I common stack procedures.* Prior to January 1, 2000, the following procedures shall be used when more than one unit utilize a common stack:

(1) *Only Phase I units or only Phase II units using common stack.* When a Phase I unit uses a common stack with one or more other Phase I units, but no other units, or when a Phase II unit uses a common stack with one or more Phase II units, but no other units, the owner or operator shall either:

(i) Install, certify, operate, and maintain an SO_2 continuous emission monitoring system and flow monitoring system in the duct to the common stack from each affected unit; or

(ii) Install, certify, operate, and maintain an SO_2 continuous emission monitoring system and flow monitoring system in the common stack; and

(A) Combine emissions for the affected units for recordkeeping and compliance purposes; or

(B) Provide information satisfactory to the Administrator on methods for apportioning SO_2 mass emissions measured in the common stack to each of the affected units. The designated representative shall provide the information to the Administrator through a petition submitted under §75.66. The Administrator may approve such substitute methods for apportioning SO_2 mass emissions measured in a common stack whenever the method ensures complete and accurate accounting of all emissions regulated under this part.

(2) *Phase I unit using common stack with non-Phase I unit(s).* When one or more Phase I units uses a common stack with one or more Phase II or nonaffected units, the owner or operator shall either:

(i) Install, certify, operate, and maintain an SO_2 continuous emission monitoring system and flow monitoring system in the duct to the common stack from each affected unit; or

Copyright 1993-1997, The Bureau of National Affairs, Inc.

(ii) Install, certify, operate, and maintain an SO_2 continuous emission monitoring system and flow monitoring system in the common stack; and

(A) Designate any Phase II unit(s) as a substitution or compensating unit(s) in accordance with part 72 of this chapter and any nonaffected unit(s) as opt-in units in accordance with part 74 of this chapter and combine emissions for recordkeeping and compliance purposes; or

[§75.16(a)(2)(ii)(A) amended at 60 FR 71111, April 4, 1995; 61 FR 25582, May 22, 1996]

(B) Install, certify, operate, and maintain an SO_2 continuous emission monitoring system and flow monitoring system in the duct from each Phase II or nonaffected unit; calculate SO_2 mass emissions from the Phase I units as the difference between SO_2 mass emissions measured in the common stack and SO_2 mass emissions measured in the ducts of the Phase II and nonaffected units; record and report the calculated SO_2 mass emissions from the Phase I units, not to be reported as an hourly average value less than zero; and combine emissions for the Phase I units for compliance purposes; or

[§75.16(a)(2)(ii)(B) amended at 61 FR 59158, Nov. 20, 1996]

(C) Install, certify, operate, and maintain an SO_2 continuous emission monitoring system and flow monitoring system in the duct from each Phase I or nonaffected unit; calculate SO_2 mass emissions from the Phase II units as the difference between SO_2 mass emissions measured in the common stack and SO_2 mass emissions measured in the ducts of the Phase I and nonaffected units, not to be reported as an hourly average value less than zero; and combine emissions for the Phase II units for recordkeeping and compliance purposes; or

[§75.16(a)(2)(ii)(C) amended at 61 FR 59158, Nov. 20, 1996]

(D) Record the combined emissions from all units as the combined SO_2 mass emissions for the Phase I units for recordkeeping and compliance purposes; or

(E) Provide information satisfactory to the Administrator on methods for apportioning SO_2 mass emissions measured in the common stack to each of the units using the common stack. The designated representative shall provide the information to the Administrator through a petition submitted under §75.66. The Administrator may approve such substitute methods for apportioning SO_2 mass emissions measured in a common stack whenever the method ensures complete and accurate accounting of all emissions regulated under this part.

(3) *Phase II unit using common stack with non-affected unit(s).* When one or more Phase II units uses a common stack with one or more nonaffected units, the owner or operator shall follow the procedures in paragraph (b)(2) of this section.

(b) *Phase II common stack procedures.* On or after January 1, 2000, the following procedures

Copyright 1993-1997, The Bureau of National Affairs, Inc.

shall be used when more than one unit uses a common stack:

(1) *Unit utilizing common stack with other affected unit(s).* When a Phase I or Phase II affected unit utilizes a common stack with one or more other Phase I or Phase II affected units, but no nonaffected units, the owner or operator shall either:

(i) Install, certify, operate, and maintain an SO_2 continuous emission monitoring system and flow monitoring system in the duct to the common stack from each affected unit; or

(ii) Install, certify, operate, and maintain an SO_2 continuous emission monitoring system and flow monitoring system in the common stack; and

(A) Combine emissions for the affected units for recordkeeping and compliance purposes; or

(B) Provide information satisfactory to the Administrator on methods for apportioning SO_2 mass emissions measured in the common stack to each of the Phase I and Phase II affected units. The designated representative shall provide the information to the Administrator through a petition submitted under §75.66. The Administrator may approve such substitute methods for apportioning SO_2 mass emissions measured in a common stack whenever the method ensures complete and accurate accounting of all emissions regulated under this part.

(2) *Unit utilizing common stack with nonaffected unit(s).* When one or more Phase I or Phase II affected units utilizes a common stack with one or more nonaffected units, the owner or operator shall either:

(i) Install, certify, operate, and maintain an SO_2 continuous emission monitoring system and flow monitoring system in the duct to the common stack from each Phase I and Phase II unit; or

[§75.16(b)(2)(i) corrected at 58 FR 34126, June 23, 1993]

(ii) Install, certify, operate, and maintain an SO_2 continuous emission monitoring system and flow monitoring system in the common stack; and

(A) Designate the nonaffected units as opt-in units in accordance with part 74 of this chapter and combine emissions for recordkeeping and compliance purposes; or

[§75.16(b)(2)(ii)(A) amended at 60 FR 71111, April 4, 1995]

(B) Install, certify, operate, and maintain an SO_2 continuous emission monitoring system and flow monitoring system in the duct from each nonaffected unit; determine SO_2 mass emissions from the affected units as the difference between SO_2 mass emissions measured in the common stack and SO_2 mass emissions measured in the ducts of the nonaffected units, not to be reported as an hourly average value less than zero; and combine emissions for the Phase I and Phase II affected units for recordkeeping and compliance purposes; or

Copyright 1993-1997, The Bureau of National Affairs, Inc.

[§75.16(b)(2)(ii)(B) amended at 61 FR 59158, Nov. 20, 1996]

(C) Record the combined emissions from all units as the combined SO_2 mass emissions for the Phase I and Phase II affected units for recordkeeping and compliance purposes; or

(D) Petition through the designated representative and provide information satisfactory to the Administrator on methods for apportioning SO_2 mass emissions measured in the common stack to each of the units using the common stack. The Administrator may approve such demonstrated substitute methods for apportioning SO_2 mass emissions measured in a common stack whenever the demonstration ensures complete and accurate accounting of all emissions regulated under this part.

(c) *Unit with bypass stack.* Whenever any portion of the flue gases from an affected unit can be routed so as to avoid the installed SO_2 continuous emission monitoring system and flow monitoring system, the owner or operator shall either:

(1) Install, certify, operate, and maintain an SO_2 continuous emission monitoring system or flow monitoring system on the bypass flue, duct, or stack gas stream and calculate SO_2 mass emissions for the unit as the sum of the emissions recorded by all required monitoring systems; or

(2) Monitor SO_2 mass emissions on the bypass flue, duct, or stack gas stream using the reference methods in §75.22(b) for SO_2 and flow and calculate SO_2 mass emissions for the unit as the sum of the emissions recorded by the installed monitoring systems on the main stack and the emissions measured by the reference method monitoring systems; or

(3) Where a Federal, State, or local regulation or permit prohibits operation of the bypass stack or duct or limits operation of the bypass stack or duct to emergency situations resulting from the malfunction of a flue gas desulfurization system record the following values for each hour during which emissions pass through the bypass stack or duct: the maximum potential concentration for SO_2 as determined under section 2 of appendix A of this part, and the hourly volumetric flow value that would be substituted for the flow monitor installed on the main stack or flue under the missing data procedures in subpart D of this part if data from the flow monitor installed on the main stack or flue were missing for the hour. Calculate SO_2 mass emissions for the unit as the sum of the emissions calculated with the substitute values and the emissions recorded by the SO_2 and flow monitoring systems installed on the main stack.

(d) *Unit with multiple stacks or ducts.* When the flue gases from an affected unit utilize two or more ducts feeding into two or more stacks (that may include flue gases from other affected or nonaffected units), or when the flue gases utilize two or more ducts feeding into a single stack and the owner or operator chooses to monitor in the ducts rather than the stack, the owner or operator shall either:

Copyright 1993-1997, The Bureau of National Affairs, Inc.

(1) Install, certify, operate, and maintain an SO_2 continuous emission monitoring system and flow monitoring system in each duct feeding into the stack or stacks and determine SO_2 mass emissions from each affected unit as the sum of the SO_2 mass emissions recorded for each duct; or

(2) Install, certify, operate, and maintain an SO_2 continuous emission monitoring system and flow monitoring system in each stack. Determine SO_2 mass emissions from each affected unit as the sum of the SO_2 mass emissions recorded for each stack, except that where another unit also exhausts flue gases to one or more of the stacks, the owner or operator shall also comply with the applicable common stack requirements of this section to determine and record SO_2 mass emissions from the units using that stack.

(e) *Heat input.* The owner or operator of an affected unit using a common stack, bypass stack, or multiple stacks shall account for heat input according to the following:

[§75.16(e) corrected at 58 FR 40746, July 30, 1993]

(1) The owner or operator of an affected unit using a common stack, bypass stack, or multiple stack with a diluent monitor and a flow monitor on each stack may choose to determine the heat input for the affected unit, wherever flow and diluent monitor measurements are used to determine the heat input, using the procedures specified in paragraphs (a) through (d) of this section, except that the terms "SO_2 mass emissions" and "emissions" are replaced with the term "heat input" and the phrase "SO_2 continuous emission monitoring system and flow monitoring system" is replaced with the phrase "a diluent monitor and a flow monitor".

(2) Notwithstanding paragraph (e)(1) of this section, for any common stack where any unit utilizing the common stack has a NO_X emission limitation pursuant to Section 407(b) of the Act, the owner or operator shall not combine heat input for compliance purposes and shall determine heat input for that unit separately.

(3) Notwithstanding paragraph (e)(1) of this section, during the period prior to January 1, 2000, the owner or operator shall not combine heat input for units utilizing a common stack in order to determine heat input for each unit for purposes of §75.10 .

(4) In the event that an owner or operator of a unit with a bypass stack does not install and certify a diluent monitor and flow monitoring system in a bypass stack, the owner or operator shall determine total heat input to the unit for each unit operating hour during which the bypass stack is used according to the missing data provisions for heat input under §75.36 or the procedures for calculating heat input from fuel sampling and analysis in section 5.5 of appendix F of this part.

(5) The owner or operator of an affected unit with a diluent monitor and a flow monitor

Copyright 1993-1997, The Bureau of National Affairs, Inc.

installed on a common stack to determine heat input at the common stack may choose to apportion the heat input from the common stack to each affected unit utilizing the common stack by using either of the following two methods, provided that all of the units utilizing the common stack are combusting fuel with the same F-factor found in section 3 of appendix F of this part. The heat input may be apportioned either by using the ratio of load (in MWe) for each individual unit to the total load for all units utilizing the common stack or by using the ratio of steam flow (in 1000 lb/hr) for each individual unit to the total steam flow for all units utilizing the common stack.

[§75.16(e)(5) added at 61 FR 59158, Nov. 20, 1996]

40 CFR 75.17 Specific provisions for monitoring emissions from common, by-pass, and multiple stacks for NO_x emission rate.

(a) *Unit utilizing common stack with other affected unit(s).* When an affected unit utilizes a common stack with one or more affected units, but no nonaffected units, the owner or operator shall either:

(1) Install, certify, operate, and maintain a NO_x continuous emission monitoring system in the duct to the common stack from each affected unit; or

(2) Install, certify, operate, and maintain a NO_x continuous emission monitoring system in the common stack and follow the appropriate procedure in paragraphs (a)(2) (i) through (iii) of this section, depending on whether or not the units are required to comply with a NO_x emission limitation (in lb/mmBtu, annual average basis) pursuant to section 407(b) of the Act (referred to hereafter as "NO_x emission limitation").

(i) When each of the affected units has a NO_x emission limitation, the designated representative shall submit a compliance plan to the Administrator that indicates:

(A) Each unit will comply with the most stringent NO_x emission limitation of any unit utilizing the common stack; or

(B) Each unit will comply with the applicable NO_x emission limitation by averaging its emissions with the other unit(s) utilizing the common stack, pursuant to the emissions averaging plan submitted under part 76 of this chapter; or

[§75.17(a)(2)(i)(B) revised at 60 FR 26513, May 17, 1995]

(C) Each unit's compliance with the applicable NO_x emission limit will be determined by a method satisfactory to the Administrator for apportioning to each of the units the combined NO_x emission rate (in lb/mmBtu) measured in the common stack, as provided in a petition submitted by the designated representative. The Administrator may approve such demonstrated substitute

Copyright 1993-1997, The Bureau of National Affairs, Inc.

methods for apportioning NO_X emission rate measured in a common stack whenever the demonstration ensures complete and accurate estimation of all emissions regulated under this part.

[§75.17(a)(2)(i)(C) added at 60 FR 26513, May 17, 1995]

(ii) When none of the affected units has a NO_X emission limitation, the owner or operator and the designated representative have no additional obligations pursuant to section 407 of the Act and may record and report a combined NO_X emission rate (in lb/mmBtu) for the affected units utilizing the common stack.

(iii) When at least one of the affected units has a NO_X emission limitation and at least one of the affected units does not have a NO_X emission limitation, the owner or operator shall either:

(A) Install, certify, operate, and maintain NO_X and diluent monitors in the ducts from the affected units; or

[Former §75.17(a)(2)(iii)(a) corrected as (A) at 58 FR 40746, July 30, 1993]

(B) Develop, demonstrate, and provide information satisfactory to the Administrator on methods for apportioning the combined NO_X emission rate (in lb/mmBtu) measured in the common stack on each of the units. The Administrator may approve such demonstrated substitute methods for apportioning the combined NO_X emission rate measured in a common stack whenever the demonstration ensures complete and accurate estimation of all emissions regulated under this part.

[§75.17(a)(2)(iii)(B) corrected at 58 FR 40746, July 30, 1993]

(b) *Unit utilizing common stack with nonaffected unit(s).* When one or more affected units utilizes a common stack with one or more nonaffected units, the owner or operator shall either:

[§75.17(b) corrected at 58 FR 34126, June 23, 1993]

(1) Install, certify, operate, and maintain a NO_X continuous emission monitoring system in the duct from each affected unit; or

(2) Develop, demonstrate, and provide information satisfactory to the Administrator on methods for apportioning the combined NO_X emission rate (in lb/mmBtu) measured in the common stack for each of the units. The Administrator may approve such demonstrated substitute methods for apportioning the combined NO_X emission rate measured in a common stack whenever the demonstration ensures complete and accurate estimation of all emissions regulated under this part.

[§75.17(b)(2) corrected at 58 FR 40746, July 30, 1993]

Copyright 1993-1997, The Bureau of National Affairs, Inc.

(c) *Unit with multiple stacks or bypass stack.* When the flue gases from an affected unit utilize two or more ducts feeding into two or more stacks (that may include flue gases from other affected or nonaffected units), or when flue gases utilize two or more ducts feeding into a single stack and the owner or operator chooses to monitor in the ducts rather than the stack, the owner or operator shall monitor the NO_X emission rate representative of each affected unit. Where another unit also exhausts flue gases to one or more of the stacks where monitoring systems are installed, the owner or operator shall also comply with the applicable common stack monitoring requirements of this section. The owner or operator shall either:

(1) Install, certify, operate, and maintain a NO_X continuous emission monitoring system in each stack or duct and determine the NO_X emission rate for the unit as the Btu-weighted sum of the NO_X emission rates measured in the stacks or ducts using the heat input estimation procedures in appendix F of this part; or

(2) Install, certify, operate, and maintain a NO_X continuous emission monitoring system in one stack or duct from each affected unit and record the monitored value as the NO_X emission rate for the unit. The owner or operator shall account for NO_X emissions from the unit during all times when the unit combusts fuel.

[§75.17(c) removed and former (d) revised and redesignated as new (c) at 60 FR 26513, May 17, 1995]

40 CFR 75.18 Specific provisions for monitoring emissions from common and by-pass stacks for opacity.

(a) *Unit using common stack.* When an affected unit utilizes a common stack with other affected units or nonaffected units, the owner or operator shall comply with the applicable monitoring provision in this paragraph, as determined by existing Federal, State, or local opacity regulations.

(1) Where another regulation requires the installation of a continuous opacity monitoring system upon each affected unit, the owner or operator shall install, certify, operate, and maintain a continuous opacity monitoring system meeting Performance Specification 1 in appendix B to part 60 of this chapter (referred to hereafter as a "certified continuous opacity monitoring system") upon each unit.

(2) Where another regulation does not require the installation of a continuous opacity monitoring system upon each affected unit, and where the affected source is not subject to any existing Federal, State, or local opacity regulations, the owner or operator shall install, certify, operate, and maintain a certified continuous opacity monitoring system upon each common stack for the combined effluent.

Copyright 1993-1997, The Bureau of National Affairs, Inc.

(b) *Unit using bypass stack.* Where any portion of the flue gases from an affected unit can be routed so as to bypass the installed continuous opacity monitoring system, the owner or operator shall install, certify, operate, and maintain a certified continuous opacity monitoring system on each bypass stack flue, duct, or stack gas stream unless either:

(1) An applicable Federal, State, or local opacity regulation or permit exempts the unit from a requirement to install a continuous opacity monitoring system in the bypass stack; or

(2) A continuous opacity monitoring system is already installed and certified at the inlet of the add-on emissions controls.

[§75.18(b)(2) amended at 60 FR 40296, Aug. 8, 1995]

(3) The owner or operator monitors opacity using Method 9 of appendix A of part 60 of this chapter whenever emissions pass through the bypass stack. Method 9 shall be used in accordance with the applicable State regulations.

[§75.18(b)(3) revised at 60 FR 26513, May 17, 1995; removed at 60 FR 40296, Aug. 8, 1995; added at 61 FR 59158, Nov. 20, 1996]

Subpart C—Operation and Maintenance Requirements

40 CFR 75.20 Certification and recertification procedures.

(a) *Initial certification approval process.* The owner or operator shall ensure that each continuous emission or opacity monitoring system required by this part, which includes the automated data acquisition and handling system, and, where applicable, the CO_2 continuous emission monitoring system, meets the initial certification requirements of this section and shall ensure that all applicable certification tests under paragraph (c) of this section are completed by the deadlines specified in §75.4 and prior to use in the Acid Rain Program. In addition, whenever the owner or operator installs a continuous emission or opacity monitoring system in order to meet the requirements of §§75.13 through 75.18 where no continuous emission or opacity monitoring system was previously installed, initial certification is required.

[§75.20(a) introductory text revised at 60 FR 26513, May 17, 1995]

(1) *Notification of initial certification test dates.* The owner or operator or designated representative shall submit a written notice of the dates of initial certification testing at the unit as specified in §75.60 and §75.61(a)(1)(i) .

[§75.20(a)(1) corrected at 58 FR 34126, June 23, 1993; revised at 60 FR 26513, May 17, 1995]

(i) Except as provided in paragraph (a)(1)(ii) of this section, the owner or operator or designated representative shall also submit notification (or provide notification by telephone) at

Copyright 1993-1997, The Bureau of National Affairs, Inc.

least 7 business days in advance of any proposed adjustments to the certification test dates.

(ii) The owner or operator may elect to repeat a certification test immediately, without advance notification, whenever the owner or operator has determined during the certification testing that a continuous emission or opacity monitoring system or component thereof has failed the test.

(2) *Certification application.* The owner or operator shall apply for certification of each continuous emission or opacity monitoring system used under the Acid Rain Program. The owner or operator shall submit the certification application in accordance with §75.60 and each complete certification application shall include the information specified in §75.63.

[§75.20(a)(2) amended at 60 FR 26513, May 17, 1995]

(3) *Provisional approval of certification applications.* Upon the successful completion of the required certification procedures of this section for each continuous emission or opacity monitoring system or component thereof, each continuous emission or opacity monitoring system or component thereof shall be deemed provisionally certified for use under the Acid Rain Program for a period not to exceed 120 days following receipt by the Administrator of the complete certification application under paragraph (a)(4) of this section; provided that no continuous emission or opacity monitor systems for a combustion source seeking to enter the Opt-in Program in accordance with part 74 of this chapter shall be deemed provisionally certified for use under the Acid Rain Program. Data measured and recorded by a provisionally certified continuous emission or opacity monitoring system or component thereof, in accordance with the requirements of appendix B of this part, will be considered valid quality-assured data (retroactive to the date and time of successful completion of all certification tests), provided that the Administrator does not invalidate the provisional certification by issuing a notice of disapproval within 120 days of receipt of the complete certification application. .

[§75.20(a)(3) amended at 60 FR 71111, April 4, 1995; 60 FR 26513, May 17, 1995]

(4) *Certification application formal approval process.* The Administrator will issue a written notice of approval or disapproval of the certification application to the owner or operator within 120 days of receipt of the complete certification application. In the event the Administrator does not issue such a written notice within 120 days of receipt, each continuous emission or opacity monitoring system which meets the performance requirements of this part and is included in the certification application will be deemed certified for use under the Acid Rain Program.

[§75.20(a)(4) introductory text amended at 60 FR 26513, May 17, 1995]

(i) *Approval notice.* If the certification application is complete and shows that each continuous emission or opacity monitoring system meets the performance requirements of this part, then the Administrator will issue a written notice of approval of the certification application within 120 days of receipt.

(ii) *Incomplete application notice.* If the certification application is not complete, then the

Copyright 1993-1997, The Bureau of National Affairs, Inc.

Administrator will issue a written notice of insufficiency. The 120- day review period shall not begin prior to receipt of a complete application.

(iii) *Disapproval notice.* If the certification application is complete but shows that any continuous emission or opacity monitoring system or component thereof does not meet the performance requirements of this part, the Administrator shall issue a written notice of disapproval of the certification application within 120 days of receipt. By issuing the notice of disapproval, the provisional certification is invalidated by the Administrator, and the data measured and recorded by each uncertified continuous emission or opacity monitoring system or component thereof shall not be considered valid quality-assured data from the date and time of completion of the invalid certification tests until the date and time that the owner or operator completes subsequently approved initial certification tests. The owner or operator shall follow the procedures for loss of certification in paragraph (a)(5) of this section for each continuous emission or opacity monitoring system or component thereof which was disapproved.

[§75.20(a)(4)(iii) amended at 60 FR 26513, May 17, 1995]

(iv) *Audit decertification.* The Administrator may issue a notice of disapproval of the certification status of a continuous emission or opacity monitoring system or component thereof, in accordance with §75.21.

[§75.20(a)(4)(iv) revised at 60 FR 26513, May 17, 1995]

(5) *Procedures for loss of certification.* When the Administrator issues a notice of disapproval of a certification application or a notice of disapproval of certification status (as specified in paragraph (a)(4)of this section), then:

(i) The owner or operator shall substitute the following values, as applicable, for each hour of unit operation during the period of invalid data specified in paragraph (a)(4)(iii) of this section or in §75.21: the maximum potential concentration of SO_2 as defined in section 2.1 of appendix A of this part to report SO_2 concentration; the maximum potential NO_X emission rate, as defined in §72.2 of this chapter to report NO_X emissions, the maximum potential flow rate, as defined in section 2.1 of appendix A of this part to report volumetric flow, or the maximum CO_2 concentration used to determine the maximum potential concentration of SO_2 in section 2.1.1.1 of appendix A of this part to report CO_2 concentration data until such time, date, and hour as the continuous emission monitoring system or component thereof can be adjusted, repaired, or replaced and certification tests successfully completed; and

(ii) The designated representative shall submit a notification of certification retest dates as specified in §75.61(a)(1)(ii) and a new certification application according to the procedures in paragraph (a)(2) of this section; and

(iii) The owner or operator shall repeat all certification tests or other requirements that were failed by the continuous emission or opacity monitoring system, as indicated in the Administrator's

Copyright 1993-1997, The Bureau of National Affairs, Inc.

notice of disapproval, no later than 30 unit operating days after the date of issuance of the notice of disapproval.

[§75.20(a)(5) revised at 60 FR 26513, May 17, 1995]

(b) *Recertification approval process*. Whenever the owner or operator makes a replacement, modification, or change in the certified continuous emission monitoring system or continuous opacity monitoring system (which includes the automated data acquisition and handling system, and, where applicable, the CO_2 continuous emission monitoring system), that significantly affects the ability of the system to measure or record the SO_2 concentration, volumetric gas flow, SO_2 mass emissions, NO_X emission rate, CO_2 concentration, or opacity, or to meet the requirements of §75.21 or appendix B of this part, the owner or operator shall recertify the continuous emission monitoring system, continuous opacity monitoring system, or component thereof according to the procedures in this paragraph. Examples of changes which require recertification include: replacement of the analytical method, including the analyzer; change in location or orientation of the sampling probe or site; rebuilding of the analyzer or all monitoring system equipment; and replacement of an existing continuous emission monitoring system or continuous opacity monitoring system. In addition, if a continuous emission monitoring system is not operating for more than 2 calendar years, then the owner or operator shall recertify the continuous emission monitoring system. The Administrator may determine whether a replacement, modification or change in a monitoring system significantly affects the ability of the monitoring system to measure or record the SO_2 concentration, volumetric gas flow, SO_2 mass emissions, NO_X emission rate, CO_2 concentration, or opacity. Furthermore, whenever the owner or operator makes a replacement, modification, or change to the flue gas handling system or the unit operation that significantly changes the flow or concentration profile of monitored emissions, the owner or operator shall recertify the continuous emission monitoring system or component thereof according to the procedures in this paragraph. The owner or operator shall recertify a continuous opacity monitoring system whenever the monitor path length changes or as required by an applicable State or local regulation or permit. Recertification is not required prior to use of a non-redundant backup continuous emission monitoring system in cases where all of the following conditions have been met: the non-redundant backup continuous emission monitoring system has been certified at the same sampling location within the previous two calendar years; all components of the non-redundant backup continuous emissions monitoring system have previously been certified; and component monitors of the non-redundant backup continuous emission monitoring system pass a linearity check (for pollutant concentration monitors) or a calibration error test (for flow monitors) prior to their use for monitoring of emissions or flow. In addition, changes resulting from routine or normal corrective maintenance and/or quality assurance activities do not require recertification, nor do software modifications in the automated data acquisition and handling system, where the modification is only for the purpose of generating additional or modified reports for the State Implementation Plan, internal company uses, or for reporting requirements under subpart G of this part.

Copyright 1993-1997, The Bureau of National Affairs, Inc.

[§75.20(b) introductory text revised at 61 FR 59158, Nov. 20, 1996]

(1) *Tests required.* For recertification testing, the owner or operator shall complete all certification tests in paragraph (c) of this section applicable to the monitoring system, except as approved by the Administrator. Such approval may be obtained by petition under §75.66 or may be provided in written guidance from the Administrator.

(2) *Notification of recertification test dates.* The owner or operator or designated representative shall submit notice of testing dates for recertification under this paragraph as specified in §75.61(a)(1)(ii), unless such testing is required as a result of a change in the flue gas handling system, a change in location or orientation of the sampling probe or site, or the planned replacement of a continuous emission or opacity monitoring system or component thereof. In such cases, the owner or operator shall provide notice in accordance with the notice provisions for initial certification testing in §75.61(a)(1)(i).

(3) *Substitution of missing data.*

(i) The owner or operator shall substitute for missing data during the period following the replacement, modification, or change to the monitoring system up to the time of successful completion of all recertification testing according to the standard missing data procedures in § §75.33 through 75.36, and shall use the standard missing data substitution procedures for all missing data periods following the recertification, except as provided below.

(ii) If the replacement, modification, or change is such that the data collected by the prior certified monitoring system are no longer representative, such as after a change to the flue gas handling system or unit operation that requires changing the span value to be consistent with Section 2.1 of appendix A of this part, the owner or operator must also substitute the appropriate one of the following values: for a change that results in a significantly higher concentration or flow rate, substitute maximum potential values according to the procedures in paragraph (a)(5) of this section during the period following the replacement, modification, or change up to the time of the successful completion of all recertification testing; or for a change that results in a significantly lower concentration or flow rate, substitute data using the standard missing data procedures during the period following the replacement, modification, or change up to the time of the successful completion of all recertification testing. The owner or operator shall then use the initial missing data procedures in §75.31 following provisional certification, unless otherwise provided by 75.34 for units with add-on emission controls.

[§75.20(b)(3) corrected at 58 FR 40746, July 30, 1993]

(4) *Recertification application.* The designated representative shall apply for recertification of a continuous emission or opacity monitoring system used under the Acid Rain Program according to the procedures in paragraph (a)(2) of this section. Each complete recertification application shall include the information specified in §75.63 of this part.

Copyright 1993-1997, The Bureau of National Affairs, Inc.

(5) *Approval/disapproval of request for recertification.* The procedures for provisional certification in paragraph (a)(3) of this section shall apply. The Administrator will issue a written notice of approval or disapproval according to the procedures in paragraph (a)(4) of this section, except that the period for the Administrator's review provided under paragraph (a)(4) of this section shall not exceed 60 days following receipt of the complete recertification application by the Administrator. The missing data substitution procedures under paragraph (b)(3) of this section shall apply in the event of a loss of recertification.

[§75.20(b) revised at 60 FR 26513, May 17, 1995]

(c) *Certification procedures.* Prior to the deadline in §75.4 of this part, the owner or operator shall conduct certification tests and in accordance with §75.63, the designated representative shall submit an application to demonstrate that the continuous emission or opacity monitoring system and components thereof meet the specifications in appendix A to this part . The owner or operator shall compare reference method values with output from the automated data acquisition and handling system that is part of the continuous emission monitoring system being tested. Except as specified in paragraphs (b)(1), (d) and (e) of this section, the owner or operator shall perform the following tests for initial certification or recertification of continuous emission or opacity monitoring systems or components according to the requirements of appendix A of this part:

[§75.20(c) introductory text corrected at 58 FR 40746, July 30, 1993; amended at 60 FR 26513, May 17, 1995]

(1) For each SO_2 pollutant concentration monitor and NO_x continuous emission monitoring system:

(i) A 7-day calibration error test, where, for the NO_x continuous emission monitoring system, this test is performed separately on the NO_x pollutant concentration monitor and the diluent gas monitor;

(ii) A linearity check, where, for the NO_x continuous emission monitoring system, this check is performed separately on the NO_x pollutant concentration monitor and the diluent gas monitor;

(iii) A relative accuracy test audit;

(iv) A bias test; and

(v) A cycle time test.

[§75.20(c)(1)(v) revised at 60 FR 26513, May 17, 1995]

(2) For each flow monitor:

(i) A 7-day calibration error test;

Copyright 1993-1997, The Bureau of National Affairs, Inc.

(ii) Relative accuracy test audits at three flue gas velocities; and

[§75.20(c)(2)(ii) amended at 60 FR 26513, May 17, 1995]

(iii) A bias test (at normal operating load).

[§75.20(c)(2)(iii) amended at 60 FR 26513, May 17, 1995]

(3) The relative accuracy test audits for the SO_2 pollution concentration monitor and the flow monitor shall be performed contemporaneously.

(4) The certification test data from an O_2 or a CO_2 diluent gas monitor certified for use in a NO_X continuous emission monitoring system may be submitted to meet the requirements of §75.20(c)(5) .

[§75.20(c)(4) amended at 60 FR 26513, May 17, 1995]

(5) For each CO_2 pollutant concentration monitor or O_2 monitor which is part of a CO_2 continuous emission monitoring system or is used to monitor heat input and for each SO_2-diluent continuous emission monitoring system:

[§75.20(c)(5) introductory text revised at 60 FR 26513, May 17, 1995]

(i) A 7-day calibration error test, where, for the SO_2-diluent system, this test is performed separately on each component monitor;

(ii) A linearity check, where, for the SO_2 diluent system, this check is performed separately on each component monitor;

(iii) A relatively accuracy test audit; and

(iv) A cycle-time test.

[§75.20(c)(5)(iv) added at 58 FR 40746, July 30, 1993; revised at 60 FR 26513, May 17, 1995]

(6) The owner or operator shall ensure that certification or recertification of a continuous opacity monitor for use under the Acid Rain Program is conducted according to one of the following procedures:

(i) Performance of the tests for certification or recertification, according to the requirements of Performance Specification 1 in appendix B to part 60 of this chapter.

[§75.20(c)(6)(i) amended at 60 FR 26513, May 17, 1995]

(ii) A continuous opacity monitoring system tested and certified previously under State or other federal requirements to meet the requirements of Performance Specification 1 shall be deemed

Copyright 1993-1997, The Bureau of National Affairs, Inc.

certified for the purposes of this part.

(7) For the automated data acquisition and handling system, tests designed to verify:

(i) Proper computation of hourly averages for pollutant concentrations, flow rate, pollutant emission rates, and pollutant mass emissions; and

(ii) Proper computation and application of the missing data substitution procedures in subpart D of this part and the bias adjustment factors in Section 7 of appendix A to this part.

(8) The owner or operator shall provide, or cause to be provided, adequate facilities for certification or recertification testing that include:

(i) Sampling ports adequate for test methods applicable to such facility, such that:

(A) Volumetric flow rate, pollutant concentration, and pollutant emission rates can be accurately determined by applicable test methods and procedures; and

(B) A stack or duct free of cyclonic flow during performance tests is available, as demonstrated by applicable test methods and procedures.

(ii) Basic facilities (e.g., electricity) for sampling and testing equipment.

[§75.20(c)(8) revised at 60 FR 26513, May 17, 1995]

(9) [Removed]

[§75.20(c)(9) removed at 60 FR 26513, May 17, 1995]

(d) *Certification/recertification procedures for optional backup continuous emission monitoring systems—*

(1) *Redundant backups.* The owner or operator of an optional redundant backup continuous emission monitoring system shall comply with all the requirements for initial certification and recertification according to the procedures specified in paragraphs (a), (b), and (c) of this section. The owner or operator shall operate the redundant backup continuous emission monitoring system during all periods of unit operation, except for periods of calibration, quality assurance, maintenance, or repair. The owner or operator shall perform upon the redundant backup continuous emission monitoring system all quality assurance and quality control procedures specified in appendix B of this part.

(2) *Non-redundant backups.* The owner or operator of an optional non-redundant backup continuous emission monitoring system shall comply with all the requirements for initial certification and recertification according to the procedures specified in paragraphs (a), (b) and (c) of this section for each non-redundant backup continuous emission monitoring system, except that: the owner or operator of a non-redundant backup continuous emission monitoring system

Copyright 1993-1997, The Bureau of National Affairs, Inc.

may omit the 7-day calibration error test for certification or recertification of an SO_2 pollutant concentration monitor, flow monitor, NO_X pollutant concentration monitor, or diluent gas monitor, provided the non-redundant backup system is not used for reporting on any affected unit for more than 720 hours in any calendar year. In addition, the owner or operator shall ensure that the certified non-redundant backup continuous emission monitoring system passes a linearity check (for pollutant concentration monitors) or a calibration error test (for flow monitors) prior to each use for recording and reporting emissions and complies with the daily and quarterly quality assurance and quality control requirements in appendix B of this part for each day and quarter that the non-redundant backup monitoring system is used to report data. If the owner or operator does not perform semi-annual or annual relative accuracy test audits upon the non-redundant backup continuous emission monitoring system, then the owner or operator shall recertify the non-redundant continuous emission monitoring system once every two calendar years, performing all certification tests applicable under this paragraph. However, if a non-redundant backup system is used for reporting data from any affected unit or common stack for more than 720 hours in any one calendar year, then reported data after the first 720 hours is not valid, quality-assured data unless the owner or operator has ensured that the non-redundant backup monitoring system has also passed the 7-day calibration error test, before data is recorded for any period in excess of 720 hours for that calendar year for that monitoring system.

(3) *Reference method backups.* A monitoring system that is operated as a reference method backup system pursuant to the reference method requirements of Methods 2, 6C, 7E, or 3A in appendix A of part 60 of this chapter need not perform and pass the certification tests required by paragraph (c) of this section prior to its use pursuant to this paragraph.

[§75.20(d) corrected at 58 FR 40746, July 30, 1993; revised at 60 FR 26513, May 17, 1995]

(e) *Certification/recertification procedures for either peaking unit or by-pass stack/duct continuous emission monitoring systems.* The owner or operator of either a peaking unit or by-pass stack/duct continuous emission monitoring system shall comply with all the requirements for certification or recertification according to the procedures specified in paragraphs (a), (b), and (c) of this section, except as follows: the owner or operator need only perform one Nine-run relative accuracy test audit for certification or recertification of a flow monitor installed on the by-pass stack/duct or on the stack/duct used only by affected peaking unit(s). The relative accuracy test audit shall be performed during normal operation of the peaking unit(s) or the by-pass stack/duct.

(f) Certification/recertification procedures for alternative monitoring systems. The designated representative representing the owner or operator of each alternative monitoring system approved by the Administrator as equivalent to or better than a continuous emission monitoring system according to the criteria in subpart E of this part shall apply for certification to the Administrator prior to use of the system under the Acid Rain Program, and shall apply for recertification to the Administrator following a replacement, modification, or change according to the procedures in paragraph (c) of this section. The owner or operator of an alternative monitoring system shall

Copyright 1993-1997, The Bureau of National Affairs, Inc.

comply with the notification and application requirements for certification or recertification according to the procedures specified in paragraphs (a) and (b) of this section.

(1) The Administrator will publish each request for initial certification of an alternative monitoring system in the **Federal Register** and, following a public comment period of 60 days, will issue a notice of approval or disapproval.

(2) No alternative monitoring system shall be authorized by the Administrator in a permit issued pursuant to part 72 of this chapter unless approved by the Administrator in accordance with this part.

[§75.20(f) revised at 60 FR 40296, Aug. 8, 1995]

(g) *Certification procedures for excepted monitoring systems under appendices D and E.* The owner or operator of a gas-fired unit, oil-fired unit, or diesel-fired unit using the optional protocol under appendix D or E of this part shall ensure that an excepted monitoring system under appendix D or E of this part meets the applicable general operating requirements of §75.10, the applicable requirements of appendices D and E to this part, and the certification requirements of this paragraph.

(1) *Certification testing.* The owner or operator shall use the following procedures for certification of an excepted monitoring system under appendix D or E of this part.

(i) When the optional SO_2 mass emissions estimation procedure in appendix D of this part or the optional NO_X emissions estimation protocol in appendix E of this part is used, the owner or operator shall provide data from a calibration test for each fuel flowmeter according to the appropriate calibration procedures using one of the following standard methods: ASME MFC-3M-1989 with September 1990 Errata, "Measurement of Fluid Flow in Pipes Using Orifice, Nozzle, and Venturi", ASME MFC-4M-1986 (Reaffirmed 1990) "Measurement of Gas Flow by Turbine Meters", ASME MFC-5M-1985, "Measurement of Liquid Flow in Closed Conduits Using Transit-Time Ultrasonic Flowmeters", ASME MFC-6M-1987 with June 1987 Errata, "Measurement of Fluid Flow in Pipes Using Vortex Flow Meters", ASME MFC-7M-1987 (Reaffirmed 1992), "Measurement of Gas Flow by Means of Critical Flow Venturi Nozzles", ASME MFC-9M-1988 with December 1989 Errata, "Measurement of Liquid Flow in Closed Conduits by Weighing Method", ISO 8316: 1987(E) "Measurement of Liquid Flow in Closed Conduits—Method by Collection of the Liquid in a Volumetric Tank", Section 8, Calibration from American Gas Association Transmission Measurement Committee Report No. 7: Measurement of Gas by Turbine Meters (1985 Edition) or American Gas Association Report No. 3: Orifice Metering of Natural Gas and Other Related Hydrocarbon Fluids Part 1: General Equations and Uncertainty Guidelines (October 1990 Edition), Part 2: Specification and Installation Requirements (February 1991 Edition) and Part 3: Natural Gas Applications (August 1992 Edition), excluding the modified calculation procedures of Part 3, as required by appendices D and E of thispart (all methods incorporated by reference under §75.6). The Administrator may also approve other procedures that use equipment traceable to National Institute of Standards of

Copyright 1993-1997, The Bureau of National Affairs, Inc.

Technology (NIST) standards. The designated representative shall document the procedure and the equipment used in the monitoring plan for the unit and in a petition submitted in accordance with §75.66(c).

[§75.20(g)(1)(i) amended at 61 FR 59159, Nov. 20, 1996]

(ii) For the automated data acquisition and handling system used under either the optional SO_2 mass emissions estimation procedure in appendix D of this part or the optional NO_X emissions estimation protocol in appendix E of this part, the owner or operator shall perform tests designed to verify:

(A) The proper computation of hourly averages for pollutant concentrations, fuel flow rates, emission rates, heat input, and pollutant mass emissions; and

(B) Proper computation and application of the missing data substitution procedures in appendix D or E of this part.

(iii) When the optional NO_X emissions protocol in appendix E is used, the owner or operator shall complete all initial performance testing under section 2.1 of appendix E .

(2) *Certification testing notification.* The designated representative shall provide initial certification testing notification and periodic retesting notification for an excepted monitoring system under appendix E of this part as specified in §75.61. The designated representative shall submit recertification testing notification as specified in §75.61 for quality assurance/quality control-related NO_X emission rate testing under section 2.3 of appendix E of this part for an excepted monitoring system under appendix E of this part. Certification testing notification or periodic retesting notification is not required for testing of a fuel flowmeter or testing for an excepted monitoring system under appendix D of this part.

(3) *Monitoring plan.* The designated representative shall submit an initial monitoring plan in accordance with §75.62(a) .

(4) *Certification application.* The designated representative shall submit a certification application in accordance with § §75.60 and 75.63 .

(5) *Provisional approval of certification applications.* Upon the successful completion of the required certification procedures for each excepted monitoring system under appendix D or E of this part, each excepted monitoring system under appendix D or appendix E of this part shall be deemed provisionally certified for use under the Acid Rain Program during the period for the Administrator's review. The provisions for the certification application formal approval process in paragraph (a)(4) of this section shall apply. Data measured and recorded by a provisionally certified excepted monitoring system under appendix D or E of this part, will be considered quality-assured data from the date and time of completion of the final certification test, provided that the Administrator does not revoke the provisional certification by issuing a notice of

Copyright 1993-1997, The Bureau of National Affairs, Inc.

disapproval within 120 days of receipt of the complete certification application in accordance with the provisions in paragraph (a)(4) of this section.

[§75.20(g) revised at 60 FR 26513, May 17, 1995]

40 CFR 75.21 Quality assurance and quality control requirements.

(a) *Continuous emission monitoring systems.* The owner or operator of an affected unit shall operate, calibrate and maintain each continuous emission monitoring system used to report emission data under the Acid Rain Program as follows:

(1) The owner or operator shall operate, calibrate and maintain each primary and redundant backup continuous emission monitoring system according to the quality assurance and quality control procedures in appendix B of this part.

(2) The owner or operator shall ensure that each non-redundant backup continuous emission monitoring system complies with the daily and quarterly quality assurance and quality control procedures in appendix B of this part for each day and quarter that the system is used to report data.

(3) The owner or operator shall perform quality assurance upon a reference method backup monitoring system according to the requirements of Method 2, 6C, 7E, or 3A in appendix A of part 60of this chapter (supplemented, as necessary, by guidance from the Administrator), instead of the procedures specified in appendix B of this part.

(4) When a unit combusts only natural gas or gaseous fuel with a sulfur content no greater than natural gas and SO_2 emissions are determined in accordance with §§75.11(e)(1) or (e)(2), the owner or operator of a unit with an SO_2 continuous emission monitoring system is not required to perform the daily or quarterly assessments of the SO_2 monitoring system under appendix B of this part on any day or in any calendar quarter in which only natural gas (or gaseous fuel with a sulfur content no greater than natural gas) is combusted in the unit. Notwithstanding, the results of any daily calibration error test and linearity test of the SO_2 monitoring system performed while the unit is combusting only natural gas (or gaseous fuel with a sulfur content no greater than natural gas) shall be considered valid. If any such test is failed, the SO_2 monitoring system shall be considered to be out-of- control until a subsequent test of the same type has been successfully completed.

(5) For a unit with an SO_2 continuous monitoring system, in which natural gas (or gaseous fuel with a sulfur content no greater than natural gas) is sometimes burned as a primary and/or backup fuel, and in which higher-sulfur fuel(s) such as oil or coal are, at other times, burned as primary or backup fuel(s), the owner or operator shall perform the relative accuracy test audits of the SO_2 monitoring system (as required by section 6.5 in appendix A of this part and section 2.3.1 in appendix B of this part) only when the higher-sulfur fuel is combusted in the unit, and shall not

Copyright 1993-1997, The Bureau of National Affairs, Inc.

perform SO_2 relative accuracy test audits when gaseous fuel is the only fuel being combusted.

(6) If a unit with an SO_2 monitoring system burns only fuel(s) with a sulfur content no greater than that of natural gas and never combusts other fuel(s) with a sulfur content greater than natural gas, the SO_2 monitoring system is exempted from the relative accuracy test audit requirements in appendices A and B of this part.

(7) In determining the deadline for the next semiannual or annual relative accuracy test audit of an SO_2 monitoring system, any calendar quarter during which a unit combusts only fuel(s) with a sulfur content no greater than natural gas shall be excluded in determining the calendar quarter, bypass operating quarter, or unit operating quarter when the next relative accuracy test audit must be performed for the SO_2 monitoring system. If, however, as a result of such exclusion of calendar quarters, eight calendar quarters elapse after a relative accuracy test audit, without a subsequent relative accuracy test audit of an SO_2 monitoring system having been performed, the owner or operator shall ensure that a relative accuracy test audit is performed in the next calendar quarter in which a fuel with a sulfur content greater than natural gas is burned in the unit.

(8) The owner or operator who, in accordance with §75.11(e)(1), uses a certified flow monitor and a certified diluent monitor and Equation F-23 in appendix F of this part to calculate SO_2 emissions during hours in which a unit combusts only pipeline natural gas, shall meet all quality control and quality assurance requirements in appendix B of this partfor the flow monitor and the diluent monitor.

[§75.21(a) amended at 60 FR 26566, May 17, 1995; revised at 61 FR 59159, Nov. 20, 1996]

(b) *Continuous opacity monitoring systems.* The owner or operator of an affected unit shall operate, calibrate, and maintain each continuous opacity monitoring system used under the Acid Rain Program according to the procedures specified for State Implementation Plans, pursuant to part 51, appendix M of this chapter.

(c) *Calibration gases.* The owner or operator shall ensure that all calibration gases used to quality assure the operation of the instrumentation required by this part shall meet the definition in §72.2 of this chapter.

(d) *Notification for periodic relative accuracy test audits.* The owner or operator or the designated representative shall submit a written notice of the dates of relative accuracy testing as specified in §75.61.

[§75.21(d) added at 60 FR 26513, May 17, 1995; removed and reserved at 61 FR 25582, May 22, 1996; added at 61 FR 59160, Nov. 20, 1996]

(e) *Consequences of audits.* The owner or operator shall invalidate data from a continuous emission monitoring system or continuous opacity monitoring system upon failure of an audit under paragraph (a)(1)(iv) of §75.20, under appendix B of this part, or any other audit, beginning

Copyright 1993-1997, The Bureau of National Affairs, Inc.

with the unit operating hour of completion of a failed audit as determined by the Administrator. The owner or operator shall not use invalidated data for reporting emissions or heat input, nor for calculations of monitor data availability.

(1) *Audit decertification.* Whenever both: an audit (including audits required under appendix B of this part) of a continuous emission or opacity monitoring system or component thereof, including the data acquisition and handling system, and a review of the initial certification application or recertification application, reveal that any continuous emission or opacity monitoring system or component should not have been certified because it did not meet a particular performance specification or other requirement of this part both at the time of the certification application submission and at the time of the audit, the Administrator will issue a notice of disapproval of the certification status of such system or component. By issuing the notice of disapproval, the certification status is revoked, prospectively, by the Administrator. The data measured and recorded by each continuous emission or opacity monitoring system shall not be considered valid quality-assured data from the date of issuance of the notification of the revoked certification status until the date and time that the owner or operator completes subsequently approved certification tests. The owner or operator shall follow the procedures for loss of certification in §75.20(a)(5) for initial certification or §75.20(b)(3) for recertification to replace, prospectively, all of the invalid, non-quality-assured data for each disapproved continuous emission or opacity monitoring system.

(2) *Out-of-control period.* Whenever a continuous emission monitoring system or continuous opacity monitoring system fails a periodic quality assurance audit, an audit under §75.20(a)(1)(iv), a field audit from EPA personnel or other audit, the system is out-of-control. The owner or operator shall follow the procedures for out- of-control periods in §75.24.

[§75.21(e) added at 60 FR 26513, May 17, 1995]

(f) [Reserved]

[§75.21(f) added at 60 FR 26566, May 17, 1995; removed at 61 FR 59159, Nov. 20, 1996]

40 CFR 75.22 Reference test methods.

(a) The owner or operator shall use the following methods included in appendix A to part 60 of this chapter to conduct monitoring system tests for certification or recertification of continuous emission monitoring systems and excepted monitoring systems under appendix E of this part and quality assurance and quality control procedures.

[§75.22(a) introductory text revised at 60 FR 26513, May 17, 1995]

(1) Methods 1, or 1A are the reference methods for selection of sampling site and sample traverses.

(2) Methods 2, 2A, 2C, or 2D are the reference methods for determination of volumetric flow.

Copyright 1993-1997, The Bureau of National Affairs, Inc.

(3) Methods 3, 3A, or 3B are the reference methods for the determination of the dry molecular weight O_2 and CO_2 concentrations in the emissions.

(4) Method 4 is the reference method for the determination of moisture in the stack.

(5) Methods 6, 6A, 6B or 6C, and 7, 7A, 7C, 7D or 7E, as applicable, are the reference methods for determining SO_2 and NO_X pollutant concentrations. (Methods 6A and 6B may also be used to determine SO_2 emission rate in lb/mmBtu. Methods 7, 7A, 7C, 7D, or 7E must be used to measure total NO_X emissions, both NO and NO_2, for purposes of this part. The owner or operator shall not use the exception in section 5.1.2 of Method 7E.)

[§75.22(a)(5) revised at 60 FR 26513, May 17, 1995]

(6) Method 20 is the reference method for determining NO_X and diluent emissions from stationary gas turbines for testing under appendix E of this part.

[§75.22(a)(6) amended at 60 FR 26513, May 17, 1995]

[§75.22(b) and (c) added at 60 FR 26513, May 17, 1995]

(b) The owner or operator may use the following methods in Appendix A of part 60 of this chapter as a reference method backup monitoring system to provide quality-assured monitor data:

(1) Method 3A for determining O_2 or CO_2 concentration;

(2) Method 6C for determining SO_2 concentration;

(3) Method 7E for determining total NO_X concentration (both NO and NO_2); and

(4) Method 2 for determining volumetric flow. The sample point(s) for reference methods shall be located according to the provisions of section 6.5.5 of appendix A of this part.

(c) (1) Performance tests shall be conducted and data reduced in accordance with the test methods and procedures of this part unless the Administrator:

(i) Specifies or approves, in specific cases, the use of a reference method with minor changes in methodology;

(ii) Approves the use of an equivalent method; or

(iii) Approves shorter sampling times and smaller sample volumes when necessitated by process variables or other factors.

(2) Nothing in this paragraph shall be construed to abrogate the Administrator's authority to require testing under Section 114 of the Act.

Copyright 1993-1997, The Bureau of National Affairs, Inc.

40 CFR 75.23 Alternatives to standards incorporated by reference.

[§75.23 and heading revised at 60 FR 26513, May 17, 1995]

(a) The designated representative of a unit may petition the Administrator for an alternative to any standard incorporated by reference and prescribed in this part in accordance with §75.66(c).

(b) [Reserved]

40 CFR 75.24 Out-of-control periods.

(a) If an out-of-control period occurs to a monitor or continuous emission monitoring system, the owner or operator shall take corrective action and repeat the tests applicable to the "out-of-control parameter" as described in appendix B of this part.

(1) For daily calibration error tests, an out-of-control period occurs when the calibration error of a pollutant concentration monitor exceeds 5.0 percent based upon the span value, the calibration error of a diluent gas monitor exceeds 1.0 percent O_2 or CO_2, or the calibration error of a flow monitor exceeds 6.0 percent based upon the span value, which is twice the applicable specification in Appendix A to this part.

(2) For quarterly linearity checks, an out-of-control period occurs when the error in linearity at any of three gas concentrations (low, mid-range, and high) exceeds the applicable specification in appendix A to this part.

(3) For relative accuracy test audits, an out-of-control period occurs when the relative accuracy exceeds the applicable specification in Appendix A to this part.

(b) When a monitor or continuous emission monitoring system is out-of-control, any data recorded by the monitor or monitoring system are not quality-assured and shall not be used in calculating monitor data availabilities pursuant to §75.32 of this part.

(c) When a monitor or continuous emission monitoring system is out-of-control, the owner or operator shall take one of the following actions until the monitor or monitoring system has successfully met the relevant criteria in appendices Aand B of this part as demonstrated by subsequent tests:

(1) Apply the procedures for missing data substitution to emissions from affected unit(s); or

(2) Use a certified backup or certified portable monitor or monitoring system or a reference method for measuring and recording emissions from the affected unit(s); or

(3) Adjust the gas discharge paths from the affected unit(s) with emissions normally observed by the out-of-control monitor or monitoring system so that all exhaust gases are monitored by a certified monitor or monitoring system meeting the requirements of appendices A and B of this

Copyright 1993-1997, The Bureau of National Affairs, Inc.

part.

(d) When the bias test indicates that an SO_2 monitor, volumetric flow monitor, or NO_X continuous emission monitoring system is biased low (i.e., the arithmetic mean of the differences between the reference method value and the monitor or monitoring system measurements in a relative accuracy test audit exceed the bias statistic in section 7 of appendix A to this part), the owner or operator shall adjust the monitor or continuous emission monitoring system to eliminate the cause of bias such that it passes the bias test or calculate and use the bias adjustment factor as specified in section 2.3.3 of appendix B to this part and in accordance with §75.7.

[§75.24(d) revised at 60 FR 26513, May 17, 1995]

(e) The owner or operator shall determine if a continuous opacity monitoring system is out-of-control and shall take appropriate corrective actions according to the procedures specified for State Implementation Plans, pursuant to appendix M of part 51 of this chapter. The owner or operator shall comply with the monitor data availability requirements of the State. If the State has no monitor data availability requirements for continuous opacity monitoring systems, then the owner or operator shall comply with the monitor data availability requirements as stated in the data capture provisions of appendix M, part 51 of this chapter.

[§75.24(e) introductory text revised at 60 FR 26513, May 17, 1995]

(1) Use a certified backup continuous opacity monitoring system for measuring and recording opacity from the affected unit(s); or

(2) Use the procedures in Method 9 in appendix A to part 60 of this chapter to measure the opacity of emissions discharged to the atmosphere from the affected unit(s).

Subpart D—Missing Data Substitution Procedures

40 CFR 75.30 General provisions.

[§75.30 revised at 60 FR 26513, May 17, 1995]

(a) Except as provided in §75.34, the owner or operator shall provide substitute data for each affected unit using a continuous emission monitoring system according to the missing data procedures in this subpart whenever the unit combusts any fuel and:

(1) A valid, quality-assured hour of SO_2 concentration data (in ppm) has not been measured and recorded for an affected unit by a certified SO_2 pollutant concentration monitor, or by an approved alternative monitoring method under subpart E of this part, except as provided in paragraph (d) of this section; or

(2) A valid, quality-assured hour of flow data (in scfh) has not been measured and recorded for

Copyright 1993-1997, The Bureau of National Affairs, Inc.

an affected unit from a certified flow monitor, or by an approved alternative monitoring system under subpart E of this part; or

(3) A valid, quality-assured hour of NO_X emission rate data (in lb/mmBtu) has not been measured and recorded for an affected unit by a certified NO_X continuous emission monitoring system, or by an approved alternative monitoring system under subpart E of this part; or

(4) A valid, quality-assured hour of CO_2 concentration data (in percent CO_2, or percent O_2 converted to percent CO_2 using the procedures in appendix F of this part) has not been measured and recorded for an affected unit by a certified CO_2 continuous emission monitoring system, or by an approved alternative monitoring method under subpart E of this part.

(b) However, the owner or operator shall have no need to provide substitute data according to the missing data procedures in this subpart if the owner or operator uses SO_2 or CO_2 (or O_2) concentration, flow, or NO_X emission rate data recorded from either a certified redundant or non-redundant backup continuous emission monitor or a backup reference method monitoring system when the certified primary monitor is not operating or out-of-control. A redundant or non-redundant backup continuous emission monitoring system must have been certified according to the procedures in §75.20 prior to the missing data period. Non-redundant backup continuous emission monitoring system must pass a linearity check (for pollutant concentration monitors) or a calibration error test (for flow monitors) prior to each period of use of the certified backup monitor for recording and reporting emissions. Use of a certified backup monitoring system or backup reference method monitoring system is optional and at the discretion of the owner or operator.

(c) When the certified primary monitor is not operating or out-of-control, then data recorded for an affected unit from a certified backup continuous emission monitor or backup reference method monitoring system are used, as if such data were from the certified primary monitor, to calculate monitor data availability in §75.32, and to provide the quality-assured data used in the missing data procedures in §§75.31 and 75.33, such as the hour after" value.

(d) The owner or operator shall comply with the applicable provisions of this paragraph during hours in which a unit with an SO_2 continuous emission monitoring system combusts only natural gas or gaseous fuel with a sulfur content no greater than natural gas.

(1) Whenever a unit with an SO_2 continuous emission monitoring system combusts only pipeline natural gas and the owner or operator is using the procedures in section 7 of appendix F of this part to determine SO_2 mass emissions pursuant to §75.11(e)(1), the owner or operator shall, for the purposes of reporting heat input data under §75.54(b)(5) and for the calculation of SO_2 mass emissions using Equation F-23 in section 7 of appendix F of this part, substitute for missing data from a flow monitoring system, CO_2 diluent monitor or O_2 diluent monitor using the missing data substitution procedures in §75.36.

Copyright 1993-1997, The Bureau of National Affairs, Inc.

(2) Whenever a unit with an SO_2 continuous emission monitoring system combusts gaseous fuel with a sulfur content no greater than natural gas (i.e., ≤ 20 gr/100 scf) and the owner or operator uses the gas sampling and analysis and fuel flow procedures in appendix D of this part, to determine SO_2 mass emissions pursuant to §75.11(e)(2), the owner or operator shall substitute for missing sulfur content, gross calorific value and fuel flow meter data using the missing data procedures in appendix D of this partand shall also, for the purposes of reporting heat input data under §75.54(b)(5), substitute for missing data from a flow monitoring system, CO_2 diluent monitor or O_2 diluent monitor using the missing data substitution procedures in §75.36.

(3) The owner or operator of a unit with an SO_2 monitoring system shall not include hours when the unit combusts only natural gas (or a gaseous fuel with sulfur content no greater than that of natural gas) in the SO_2 data availability calculations in §75.32 , or in the calculations of substitute SO_2 data using the procedures of either §§75.31 or 75.33, when SO_2 emissions are determined in accordance with §§75.11(e)(1)or (e)(2). For the purpose of the missing data and availability procedures for SO_2 pollutant concentration monitors in §§75.31 through 75.33 only, all hours during which the unit combusts only natural gas, or a gaseous fuel with a sulfur content no greater than natural gas, shall be excluded from the definition of "monitor operating hour," "quality-assured monitor operating hour," "unit operating hour," and "unit operating day", when SO_2 emissions are determined in accordance with §§75.11(e)(1) or (e)(2).

(4) During all hours in which a unit with an SO_2 continuous emission monitoring system combusts only natural gas (or gaseous fuel with a sulfur content no greater than natural gas) and the owner or operator uses the SO_2 monitoring system to determine SO_2 mass emissions pursuant to §75.11(e)(3), the owner or operator shall determine the percent monitor data availability for SO_2 in accordance with §75.32 and shall use the standard SO_2 missing data procedures of §75.33

.

[§75.30(d) added at 60 FR 26566, May 17, 1995; revised at 61 FR 59160, Nov. 20, 1996]

(e) On or after January 1, 1997, the owner or operator shall comply with the provisions of this paragraph. Prior to January 1, 1997, the owner or operator may comply with the provisions of this paragraph.

(1) For monitoring of emissions at a unit with multiple stacks or a bypass stack, include only those hours when emissions are passing through the stack or duct in the definitions of "unit operating hour" and "quality-assured monitor operating hour" for purposes of applying the missing data and availability procedures in §§75.31 through 75.36 to the monitoring system on that stack or duct.

(2) If the proportion of flow going to each stack from a unit with multiple stacks or the proportion of flow going to a bypass stack has changed during the previous 2,160 hours when

Copyright 1993-1997, The Bureau of National Affairs, Inc.

emissions passed through that stack, then record the maximum flow rate recorded by the flow monitoring system at the corresponding load range during the previous 2,160 hours of quality-assured monitor data when emissions passed through that stack, instead of the value calculated using the missing data substitution procedures in §75.31 or §75.33.

[§75.30(e) added at 60 FR 26566, May 17, 1995]

40 CFR 75.31 Initial missing data procedures.

[§75.31(a) and (b) amended at 60 FR 26513, May 17, 1995]

(a) During the first 720 quality-assured monitor operating hours following initial certification (i.e., following the date and time of completion of successful certification tests), of the SO_2 and CO_2 (or O_2) pollutant concentration monitor and during the first 2,160 quality-assured monitor operating hours following initial certification of the flow monitor and NO_X continuous emission monitoring system(s), the owner or operator shall provide substitute data required under this subpart according to the procedures in paragraphs (b) and (c) of this section. The owner or operator of a unit shall use these procedures for no longer than three years (26,280 clock hours) following initial certification.

(b) *SO_2* or CO_2 (or O_2) concentration data. For each hour of missing SO_2 or CO_2 concentration data (including CO_2 data converted from O_2 data using the procedures in appendix F of this part) or O_2 concentration data used to calculate heat input, the owner or operator shall calculate the substitute data as follows:

(1) Whenever prior quality-assured data exist, the owner or operator shall substitute, by means of the data acquisition and handling system, the average of the hourly SO_2 or CO_2 (or O_2) concentrations recorded for an affected unit by a certified monitor for the unit operating hour immediately before and the unit operating hour immediately after the missing data period for each hour of missing data.

(2) Whenever no prior quality-assured SO_2 or CO_2 (or O_2) concentration data exist, the owner or operator shall substitute the maximum potential concentration for SO_2 or CO_2 (or minimum O_2 concentration, for determination of heat input), as specified in section 2.1 of appendix A of this part, for each hour of missing data.

[§75.31(b)(2) corrected at 58 FR 40746, July 30, 1993]

(c) *Volumetric flow and NO_x emission rate data.* For each hour of missing volumetric flow or NO_x emission rate data;

(1) Whenever prior quality-assured data exist in the load range corresponding to the operating load at the time the missing data period occurred, the owner or operator shall substitute, by means

Copyright 1993-1997, The Bureau of National Affairs, Inc.

$$\text{Percent monitor data availability} = \frac{\text{Total unit operating hours for which quality-assured data were recorded since certification}}{\text{Total unit operating hours since certification}} \times 100 \qquad \text{(Eq. 8)}$$

of the automated data acquisition and handling system, the average hourly flow rate (or NO_x emission rate) recorded for the affected unit by a certified flow monitor (or a certified NO_x continuous emission monitoring system). The flow rate (or NO_x emission rate) shall be calculated from the corresponding load range as determined using the procedure in appendix C of this part.

(2) Whenever no prior quality-assured flow or NO_x emission rate data exist for the corresponding load range, the owner or operator shall substitute the average hourly flow rate or the average hourly NO_x emission rate at the next higher level load range for which quality-assured data is available, for each hour of missing data.

[§75.31(c)(2) corrected at 58 FR 40746, July 30, 1993]

(3) Whenever no prior quality-assured flow or NO_X emission rate data exist for the corresponding load range, or any higher load range, the owner or operator shall calculate and substitute the maximum potential flow rate or shall substitute the maximum potential NO_X emission rate, as specified in §72.2 of this chapter and section 2.1 of appendix A, for each hour of missing data.

[§75.31(c)(3) corrected at 58 FR 40746, July 30, 1993; amended at 60 FR 26513, May 17, 1995]

40 CFR 75.32 Determination of monitor data availability for standard missing data procedures.

(a) Following initial certification, upon completion of the first 720 quality-assured monitor operating hours of the SO_2 or CO_2 (or O_2) pollutant concentration monitor or the first 2,160 quality-assured monitor operating hours of the flow monitor or NO_X continuous emission monitoring system, the owner or operator shall calculate and record, by means of the automated data acquisition and handling system, the percent monitor data availability for the SO_2 and CO_2 (or O_2) pollutant concentration monitor, the flow monitor, the NO_X continuous emission monitoring system as follows:

[§75.32(a) introductory text revised at 60 FR 26513, May 17, 1995]

(1) Prior to completion of 8,760 unit operating hours following initial certification, the owner or operator shall, for the purpose of applying the standard missing data procedures of §75.33, use Equation 8 to calculate, hourly, percent monitor data availability.

[§75.32(a)(1) amended at 60 FR 26513, May 17, 1995]

(2) Upon completion of 8,760 unit operating hours following initial certification (or, for a unit with less than 8,760 unit operating hours three years (26,280 clock hours) after initial

Copyright 1993-1997, The Bureau of National Affairs, Inc.

$$\text{Percent monitor data availability} = \frac{\text{Total unit operating hours for which quality–assured data were recorded during previous 8,760 units operating hours}}{8{,}760} \times 100 \qquad \text{(Eq. 9)}$$

certification, upon completion of three years (26,280 clock hours) following initial certification) and thereafter, the owner or operator shall, for the purpose of applying the standard missing data procedures of §75.33, use Equation 9 to calculate, hourly, percent monitor data availability.

[§75.32(a)(2) revised at 58 FR 26513, May 17, 1995]

(3) The owner or operator shall include all unit operating hours, and all monitor operating hours for which quality-assured data were recorded by a certified redundant or non-redundant backup monitor or a reference method for that unit; or by an approved alternative monitoring system under subpart E of this part when calculating percent monitor data availability using Equation 8 or 9. No hours from more than three years (26,280 clock hours) earlier shall be used in Equation 9. For a unit that has accumulated less than 8,760 unit operating hours in the previous three years (26,280 clock hours), replace the words "during previous 8,760 unit operating hours" in Equation 9 with "in the previous three years" and replace "8,760" with "total unit operating hours in the previous three years." The owner or operator of a unit with an SO_2 monitoring system shall, when SO_2 emissions are determined in accordance with §§75.11(e)(1) or (e)(2), exclude hours in which a unit combusts only natural gas (or gaseous fuel with a sulfur content no greater than natural gas) from calculations of percent monitor data availability for SO_2 pollutant concentration monitoris, as provided in §75.30(d).

[§75.32(a)(3) amended at 60 FR 26566, May 17, 1995; revised at 61 FR 59160, Nov. 20, 1996]

(4) [Reserved]

[§75.32(a)(4) added at 60 FR 26566, May 17, 1995; removed at 61 FR 59160, Nov. 20, 1996]

(b) The monitor data availability need not be calculated during the missing data period. The owner or operator shall record the percent monitor data availability for the last hour of each missing data period as the monitor availability used to implement the missing data substitution procedures.

[§75.32(b) corrected at 58 FR 40746, July 30, 1993; amended at 58 FR 26513, May 17, 1995]

40 CFR 75.33 Standard missing data procedures.

[§75.33 corrected at 58 FR 34126, June 23, 1993]

(a) Following initial certification and upon completion of the first 720 quality- assured monitor operating hours of the SO_2 pollutant concentration monitor or the first 2,160 quality-assured monitor operating hours of the flow monitor or NO_x continuous emission monitoring system, the owner or operator shall provide substitute data required under this subpart according to the procedures in paragraphs (b) and (c) of this section and depicted in Table 1 (SO_x) and Table 2

Copyright 1993-1997, The Bureau of National Affairs, Inc.

(NO_x, flow). The owner or operator of a unit shall substitute for missing data using only quality-assured monitor operating hours of data from the three years (26,280 clock hours) prior to the date and time of the missing data period.

[§75.33(a) amended at 60 FR 26513, May 17, 1995]

Table 1.--Missing Data Procedure for SO_2 CEMS

Trigger conditions		Calculation routines	
Availability (percent)	Duration (N) of outage (hours)	Method	Lookback period
95 or more	N≤24	Average	HB/HA.
	N>24	Max. of average	HB/HA.
		Max. of 90th percentile	720 operating hours*(1).
90 or more, but below 95	N≤8	Average	HB/HA.
	N>8	Max. of average	HB/HA.
		Max. of 95th percentile	720 operating hours*(2).
Below 90	N<0	Maximum value[1](3)	720 operating hours*(4).

HB/HA=hour before and hour after the outage. * =Quality-assured, monitor operating

[1] Where unit with add-on emission controls can demonstrate that the controls are opera

Table 2.--Missing Data Procedure for NO_x and Flow CEMS

Trigger conditions		Calculation routines		
Availability (percent)	Duration (N) of outage (hours)	Method	Lookback period	Load ranges
95 or more	N≤24	Average	2160 operating hours*(5)	Yes.
	N>24	Max. of average	HB/HA	No.
		Max. of	2160	Yes

Copyright 1993-1997, The Bureau of National Affairs, Inc.

		90th percentile...	operating hours*(6).	
90 or more, but below 95.....	N≤8...	Average...	2160 operating hours.*(7)..	Yes.
	N>8.....	Max. of average...	HB/HA....	No.
	.....	Max. of 95th percentile...	2160 operating hours.*(8)..	Yes.
Below 90.....	N<0...	Maximum value[1](9)..	2160 operating hours.*(10)..	Yes.

HB/HA=hour before and hour after the outage. * =Quality-assured, monitor operating

[1] Where unit with add-on emission controls can demonstrate that the controls are opera

(b) *SO_2 concentration data.* For each hour of missing SO_2 concentration data,

(1) Whenever the monitor data availability is equal to or greater than 95.0 percent, the owner or operator shall calculate substitute data by means of the automated data acquisition and handling system for each hour of each missing data period according to the following procedures:

(i) For a missing data period less than or equal to 24 hours, substitute the average of the hourly SO_2 concentrations recorded by an SO_2 pollutant concentration monitor for the hour before and the hour after the missing data period.

(ii) For a missing data period greater than 24 hours, substitute the greater of:

(A) The 90th percentile hourly SO_2 concentration recorded by an SO_2 pollutant concentration monitor during the previous 720 quality-assured monitor operating hours; or

(B) The average of the hourly SO_2 concentrations recorded by an SO_2 pollutant concentration monitor for the hour before and the hour after the missing data period.

(2) Whenever the monitor data availability is at least 90.0 percent but less than 95.0 percent, the owner or operator shall calculate substitute data by means of the automated data acquisition and handling system for each hour of each missing data period according to the following procedures:

(i) For a missing data period of less than or equal to 8 hours, substitute the average of the hourly SO_2 concentrations recorded by an SO_2 pollutant concentration monitor for the hour

Copyright 1993-1997, The Bureau of National Affairs, Inc.

before and the hour after the missing data period.

(ii) For a missing data period of more than 8 hours, substitute the greater of:

(A) the 95th percentile hourly SO_2 concentration recorded by an SO_2 pollutant concentration monitor during the previous 720 quality-assured monitor operating hours; or

(B) The average of the hourly SO_2 concentrations recorded by an SO_2 pollutant concentration monitor for the hour before and the hour after the missing data period.

(3) Whenever the monitor data availability is less than 90.0 percent, the owner or operator shall substitute for each hour of each missing data period the maximum hourly SO_2 concentration recorded by an SO_2 pollutant concentration monitor during the previous 720 quality-assured monitor operating hours.

(c) *Volumetric flow and NO_x emission rate data.* For each hour of missing volumetric flow or NO_x emission rate data,

(1) Whenever the monitor or continuous emission monitoring system data availability is equal to or greater than 95.0 percent, the owner or operator shall calculate substitute data by means of the automated data acquisition and handling system for each hour of each missing data period according to the following procedures:

(i) For a missing data period less than or equal to 24 hours, substitute the average hourly flow or NO_x emission rate recorded by a flow monitor or NO_x continuous emission monitoring system during the previous 2,160 quality-assured monitor operating hours at the corresponding unit load range recorded for each missing hour, as determined using the procedure in Appendix C to this part.

(ii) For a missing data period greater than 24 hours, substitute the greater of:

(A) The 90th percentile hourly flow or NO_x emission rate recorded by a flow monitor or NO_x continuous emission monitoring system at the corresponding unit load range recorded for each missing hour during the previous 2,160 quality-assured monitor operating hours, as determined using the procedure in appendix C to this part; or

(B) The average of the hourly flow or NO_x emission rate recorded by a flow monitor or NO_x continuous emission monitoring system for the hour before and the hour after the missing data period.

(2) Whenever the monitor or continuous emission monitoring system data availability is at least 90.0 percent but less than 95.0 percent, the owner or operator shall calculate substitute data by means of the automated data acquisition and handling system for each hour of each missing data period according to the following procedures:

Copyright 1993-1997, The Bureau of National Affairs, Inc.

(i) For a missing data period less than or equal to 8 hours, substitute the average hourly flow or NO_x emission rate recorded by a flow monitor or NO_x continuous emission monitoring system at the corresponding unit load range recorded for the missing hour during the previous 2,160 quality-assured monitor operating hours, as determined using the procedure in appendix C to this part.

(ii) For a missing data period greater than 8 hours, substitute the greater of:

(A) The 95th percentile hourly flow or NO_x emission rate recorded by a flow monitor or NO_x continuous emission monitoring system at the corresponding unit load range recorded for each missing hour during the previous 2,160 quality-assured monitor operating hours, as determined using the procedure in appendix C to this part; or

(B) The average of the hourly flow or NO_x emission rate recorded by a flow monitor or NO_x continuous emission monitoring system for the hour before and the hour after the missing data period.

(3) Whenever the monitor data availability is less than 90.0 percent, the owner or operator shall calculate substitute data by means of the automated data acquisition and handling system for each hour of each missing data period by substituting the maximum hourly flow or NO_x emission rate recorded by the flow monitor or NO_x continuous emission monitoring system at the corresponding unit load range recorded for the missing hour during the previous 2,160 quality-assured monitor operating hours, as determined using the procedure in Section 2 of appendix C to this part.

(4) Whenever no prior quality-assured flow or NO_x emission rate data exist for the corresponding load range, the owner or operator shall substitute the maximum hourly flow rate or the maximum hourly NO_x emission rate at the next higher level load range for which quality-assured data is available for each hour of missing data.

(5) Whenever no prior quality-assured flow or NO_X emission rate data exist for either the corresponding load range or a higher load range, the owner or operator shall substitute the maximum potential NO_X emission rate or the maximum potential flow rate, as defined in section 2.1 of appendix A of this part.

[§75.33(c)(5) added at 60 FR 26513, May 17, 1995; amended at 61 FR 25582, May 22, 1996]

40 CFR 75.34 Units with add-on emission controls.

[§75.34 revised at 60 FR 26566, May 17, 1995]

(a) The owner or operator of an affected unit equipped with add-on SO_2 and/or NO_X emission controls shall use one of the following options for each hour in which quality-assured data from

Copyright 1993-1997, The Bureau of National Affairs, Inc.

the outlet SO_2 and/or NO_X monitoring system(s) are not obtained:

(1) The owner or operator may use the missing data substitution procedures as specified for all affected units in §§75.31 through 75.33 to substitute data for each hour in which the add-on emission controls are operating within the proper parametric ranges specified in the quality assurance/quality control program for the unit, required by section 1 in appendix B of this part . The designated representative shall document in the quality assurance/ quality control program the ranges of the add-on emission control operating parameters that indicate proper operation of the controls. The owner or operator shall, for each missing data period, record data to verify the proper operation of the SO_2 or NO_X add-on emission controls during each hour, as described in paragraph (d) of this section. In addition, under §75.64(c), the designated representative shall submit a certified verification of the proper operation of the SO_2 or NO_X add- on emission control for each missing data period at the end of each quarter.

(2) The designated representative may petition the Administrator under §75.66 to replace the maximum recorded value in the last 720 quality-assured monitor operating hours with a value corresponding to the maximum controlled emission rate (an emission rate recorded when the add-on emission controls were operating) recorded during the last 720 quality-assured monitor operating hours. For such a petition, the designated representative must demonstrate that the following conditions are met: the monitor data availability, calculated in accordance with §75.32, for the affected unit is below 90.0 percent and parametric data establish that the add-on emission controls were operating properly (i.e., within the range of operating parameters provided in the quality assurance/ quality control program) during the time period under petition.

(3) The designated representative may petition the Administrator under §75.66 for approval of site-specific parametric monitoring procedure(s) for calculating substitute data for missing SO_2 pollutant concentration and NO_X emission rate data in accordance with the requirements of paragraphs (b) and (c) of this section and appendix C of this part. The owner or operator shall record the data required in appendix C of this part, pursuant to §75.55(b).

[§75.34(a) amended at 61 FR 59160, Nov. 20, 1996]

(b) For an affected unit equipped with add-on SO_2 emission controls, the designated representative may petition the Administrator to approve a parametric monitoring procedure, as described in appendix C of this part, for calculating substitute SO_2 concentration data for missing data periods. The owner or operator shall use the procedures in §§75.31 , 75.33, or 75.34(a) for providing substitute data for missing SO_2 concentration data unless a parametric monitoring procedure has been approved by the Administrator.

[§75.34(b) introductory text amended at 61 FR 59161, Nov. 20, 1996]

(1) Where the monitor data availability is 90.0 percent or more for an outlet SO_2 pollutant concentration monitor, the owner or operator may calculate substitute data using an approved

Copyright 1993-1997, The Bureau of National Affairs, Inc.

parametric monitoring procedure.

[§75.34(b)(1) amended at 61 FR 59161, Nov. 20, 1996]

(2) Where the monitor data availability for an outlet SO_2 pollutant concentration monitor is less than 90.0 percent, the owner or operator shall calculate substitute data using the procedures in §75.34(a)(1) or (2), even if the Administrator has approved a parametric monitoring procedure.

(c) For an affected unit with NO_X add- on emission controls, the designated representative may petition the Administrator to approve a parametric monitoring procedure, as described in appendix C of this part, in order to calculate substitute NO_X emission rate data for missing data periods. The owner or operator shall use the procedures in §§75.31 or 75.33 for providing substitute data for missing NO_X emission rate data prior to receiving the Administrator's approval for a parametric monitoring procedure.

[§75.34(c) introductory text amended at 61 FR 59161, Nov. 20, 1996]

(1) Where monitor data availability for a NO_X continuous emission monitoring system is 90.0 percent or more, the owner or operator may calculate substitute data using an approved parametric monitoring procedure.

(2) Where monitor data availability for a NO_X continuous emission monitoring system is less than 90.0 percent, the owner or operator shall calculate substitute data using the procedure in §75.34(a)(1) or (2), even if the Administrator has approved a parametric monitoring procedure.

(d) The owner or operator shall keep records of information as described in subpart F of this part to verify the proper operation of the SO_2 or NO_X emission controls during all periods of SO_2 or NO_X emission missing data. The owner or operator shall provide these records to the Administrator or to the EPA Regional Office upon request. Whenever such data are not provided or such data do not demonstrate that proper operation of the SO_2 or NO_X add-on emission controls has been maintained in accordance with the range of add-on emission control operating parameters reported in the quality assurance/quality control program for the unit, the owner or operator shall substitute the maximum potential NO_X emission rate, as defined in §72.2 of this chapter, to report the NO_X emission rate, and either the maximum hourly SO_2 concentration recorded by the inlet monitor during the previous 720 quality-assured monitor operating hours, if available, or the maximum potential concentration for SO_2, as defined by section 2.1.1.1 of appendix A of this part, to report SO_2 concentration for each hour of missing data until information demonstrating proper operation of the SO_2 or NO_X emission controls is available.

[§75.34(d) amended at 61 FR 59161, Nov. 20, 1996]

Copyright 1993-1997, The Bureau of National Affairs, Inc.

40 CFR 75.35 Missing data procedures for CO_2 data.

[§75.35 added at 60 FR 26513, May 17, 1995]

(a) On or after January 1, 1996, the owner or operator of a unit with a CO_2 continuous emission monitoring system shall substitute for missing CO_2 concentration data using the procedures of this section. Prior to January 1, 1996, the owner or operator of a unit with a CO_2 continuous emission monitoring system may substitute for missing CO_2 concentration data using the procedures of this section.

(b) During the first 720 quality-assured monitor operating hours following initial certification (i.e., following the date and time of completion of successful certification tests), of the CO_2 continuous emission monitoring system, the owner or operator shall provide substitute data required under this subpart according to the procedures in paragraph (b) of §75.31.

(c) Upon completion of the first 720 quality-assured monitor operating hours following initial certification of the CO_2 continuous emission monitoring system, the owner or operator shall provide substitute data for CO_2 concentration or CO_2 mass emissions required under this subpart according to the procedures in paragraphs (c)(1), (c)(2), or (c)(3) of this section, including CO_2 data calculated from O_2 measurements using the procedures in appendix F of this part.

(1) Whenever a quality-assured monitoring operating hour of CO_2 concentration data has not been obtained and recorded for a period less than or equal to 72 hours or for a missing data period where the percent monitor data availability for the CO_2 continuous emission monitoring system as of the last unit operating hour of the previous calendar quarter was greater than or equal to 90.0 percent, then the owner or operator shall substitute the average of the recorded CO_2 concentration for the hour before and the hour after the missing data period for each hour in each missing data period.

(2) Whenever no quality-assured CO_2 concentration data are available for a period of 72 consecutive unit operating hours or more, the owner or operator shall begin substituting CO_2 mass emissions calculated using the procedures in appendix G of this part beginning with the seventy-third hour of the missing data period until quality-assured CO_2 concentration data are again available. The owner or operator shall use the CO_2 concentration from the hour before the missing data period to substitute for hours 1 through 72 of the missing data period.

(3) Whenever no quality-assured CO_2 concentration data are available for a period where the percent monitor data availability for the CO_2 continuous emission monitoring system as of the last unit operating hour of the previous calendar quarter was less than 90.0 percent, the owner or operator shall substitute CO_2 mass emissions calculated using the procedures in appendix G of

Copyright 1993-1997, The Bureau of National Affairs, Inc.

this part for each hour of the missing data period until quality-assured CO_2 concentration data are again available.

40 CFR 75.36 Missing data procedures for heat input.

[§75.36 added at 60 FR 26513, May 17, 1995]

(a) On or after January 1, 1996, the owner or operator of a unit monitoring heat input with a CO_2 or O_2 pollutant concentration monitor and a flow monitoring system shall substitute for missing heat input data using the procedures of this section. Prior to January 1, 1996, the owner or operator of a unit monitoring heat input with a CO_2 or O_2 pollutant concentration monitor and a flow monitoring system may substitute for missing heat input data using the procedures of this section.

(b) During the first 720 quality-assured monitor operating hours following initial certification (i.e., following the date and time of completion of successful certification tests), of the CO_2 or O_2 pollutant concentration monitor and during the first 2,160 quality-assured monitoring operating hours following initial certification of the flow monitor, the owner or operator shall provide substitute data for heat input calculated under section 5.2 of appendix F of this part by substituting the CO_2 or O_2 concentration measured or substituted according to paragraph (b) of §75.31 , and by substituting the flow rate measured or substituted according to §75.31.

(c) Upon completion of the first 720 quality-assured monitor operating hours following initial certification of the CO_2 (or O_2) pollutant concentration monitor, the owner or operator shall provide substitute data for CO_2 or O_2 concentration to calculate heat input or shall substitute heat input determined under appendix F of this part according to the procedures in paragraphs (c)(1), (c)(2), or (c)(3) of this section. Upon completion of 2,160 quality-assured monitor operating hours following initial certification of the flow monitor, the owner or operator shall provide substitute data for volumetric flow according to the procedures in §75.33 in order to calculate heat input, unless required to determine heat input using the fuel sampling procedures in appendix F of this part under paragraphs (c)(1) , (c)(2) or (c)(3) of this section.

(1) Whenever a quality-assured monitor operating hour of CO_2 or O_2 concentration data has not been obtained and recorded for a period less than or equal to 72 hours or for a missing data period where the percent monitor data availability for the CO_2 or O_2 pollutant concentration monitor as of the last unit operating hour of the previous calendar quarter was greater than or equal to 90.0 percent, the owner or operator shall substitute the average of the recorded CO_2 or O_2 concentration for the hour before and the hour after the missing data period for each hour in each missing data period to calculate heat input.

(2) Whenever a quality-assured monitor operating hour of CO_2 or O_2 concentration data has not been obtained and recorded for a period of 72 consecutive unit operating hours or more, the

Copyright 1993-1997, The Bureau of National Affairs, Inc.

owner or operator shall begin substituting heat input calculated using the procedures in section 5.5 of appendix F of this partbeginning with the seventy-third hour of the missing data period until quality- assured CO_2 or O_2 concentration data are again available. The owner or operator shall use the CO_2 or O_2 concentration from the hour before the missing data period to substitute for hours 1 through 72 of the missing data period.

(3) Whenever no quality-assured CO_2 or O_2 concentration data are available for a period where the percent monitor data availability for the CO_2 continuous emission monitoring system (or O_2 diluent monitor) as of the last unit operating hour of the previous calendar quarter was less than 90.0 percent, the owner or operator shall substitute heat input calculated using the procedures in section 5.5 of appendix F of this part for each hour of the missing data period until quality-assured CO_2 or O_2 concentration data are again available.

(d) For a unit that has no diluent monitor certified during the period between the certification deadline in §75.4(a) for flow monitoring systems and the certification deadline in §75.4(a) for NO_X and CO_2 continuous emission monitoring systems, the owner or operator shall calculate heat input using the procedures in section 5.5 of appendix F of this part until quality- assured data are available from both a flow monitor and a diluent monitor.

Subpart E—Alternative Monitoring Systems

40 CFR 75.40 General demonstration requirements.

(a) The owner or operator of an affected unit, or the owner or operator of an affected unit and representing a class of affected units which meet the criteria specified in §75.47, required to install a continuous emission monitoring system may apply to the Administrator for approval of an alternative monitoring system (or system component) to determine average hourly emission data for SO_2, NO_x, and/or volumetric flow by demonstrating that the alternative monitoring system has the same or better precision, reliability, accessibility, and timeliness as that provided by the continuous emission monitoring system.

(b) The requirements of this subpart shall be met by the alternative monitoring system when compared to a contemporaneously operating, fully certified continuous emission monitoring system or a contemporaneously operating reference method, where the appropriate reference methods are listed in §75.22.

40 CFR 75.41 Precision criteria.

(a) *Data collection and analysis.* To demonstrate precision equal to or better than the continuous emission monitoring system, the owner or operator shall conduct an F-test, a correlation analysis, and a t-test for bias as described in this section. The t-test shall be performed only on sample data at the normal operating level and primary fuel supply, whereas the F- test and

Copyright 1993-1997, The Bureau of National Affairs, Inc.

the correlation analysis must be performed on each of the data sets required under paragraphs (a)(4) and (a)(5) of this section. The owner or operator shall collect and analyze data according to the following requirements:

(1) Data from the alternative monitoring system and the continuous emission monitoring system shall be collected and paired in a manner that ensures each pair of values applies to hourly average emissions during the same hour.

[§75.41(a)(1) amended at 60 FR 26513, May 17, 1995; 60 FR 40296, Aug. 8, 1995]

(2) An alternative monitoring system that directly measures emissions shall have probes or other measuring devices in locations that are in proximity to the continuous emission monitoring system and shall provide data on the same parameters as those measured by the continuous emission monitoring system. Data from the alternative monitoring system shall meet the statistical tests for precision in paragraph (c) of this section and the t-test for bias in appendix A of this part.

(3) An alternative monitoring system that indirectly quantifies emission values by measuring inputs, operating characteristics, or outputs and then applying a regression or another quantitative technique to estimate emissions, shall meet the statistical tests for precision in paragraph (c) of this section and the t-test for bias in Appendix A of this part.

(4) For flow monitor alternatives, the alternative monitoring system must provide sample data for each of three different exhaust gas velocities while the unit or units, if more than one unit exhausts into the stack or duct, is burning its primary fuel at:

(i) A frequently used low operating level, selected within the range between the minimum safe and stable operating level and 50 percent of the maximum operating level,

(ii) A frequently used high operating level, selected within the range between 80 percent of the maximum operating level and the maximum operating level, and

(iii) The normal operating level, or an evenly spaced intermediary level between low and high levels used if the normal operating level is within a specified range, (10.0 percent of the maximum operating level) of either (a)(4)(i) or (ii) of this section.

(5) For pollutant concentration monitor alternatives, the alternative monitoring system shall provide sample data for the primary fuel supply and for all alternative fuel supplies that have significantly different sulfur content.

(6) For the normal unit operating level and primary fuel supply, paired hourly sample data shall be provided for at least 90.0 percent of the hours during 720 unit operating hours. For each of the remaining two operating levels for flow monitor alternatives, and for each alternative fuel supply for pollutant concentration monitor alternatives, paired hourly sample data shall be provided for at least 24 successive unit operating hours.

(7) The owner or operator shall not use missing data substitution procedures to provide sample

Copyright 1993-1997, The Bureau of National Affairs, Inc.

$$\left(\frac{S_d}{\sqrt{n}}\right)_{adj} = \left[\sqrt{\left(\frac{1+p}{1-p}\right)-\left(\frac{2p(1-p^n)}{n(1-p)^2}\right)}\right] \times \sqrt{VIF} \times \left(\frac{S_d}{\sqrt{n}}\right) \qquad \text{(Eq. 22)}$$

$\left(\frac{S_d}{\sqrt{n}}\right)_{adj}$ = The autocorrelation - adjusted standard error of the mean.

[§75.41(b)(2)(iv)(C) corrected at 58 FR 40746, July 30, 1993; amended at 60 FR 26513, May 17, 1995; 60 FR 40296, Aug. 8, 1995]

(v) For any data set, listed in paragraph (b)(2)(iv) of this section, that satisfies the conditions for autocorrelation specified in paragraph (b)(2)(ii) of this section, the owner or operator may adjust the variance of that data set, using Equation 20 of this section.

(A) The adjusted variance may be used in place of the corresponding original variance, as calculated using Equation 23 of this section, in the F-test (Equation 24) of this section.

[§75.41(b)(2)(v)(A) corrected at 58 FR 40746, July 30, 1993]

(B) In place of the standard error of the mean,

$$\frac{S_d}{\sqrt{n}}$$

in the bias test Equation A-9 of Appendix A of this part the following adjusted standard error of the mean may be used:

(Eq. 22)
where,

[§75.41(b)(2)(v)(B) corrected at 58 FR 40746, July 30, 1993]

(vi) For each data set in which a variance adjustment is used, the owner or operator shall provide the following:

(A) All values in the data set in printed and electronic format.

(B) Values of the autocorrelation coefficient, its level of significance, the variance inflation factor, and the unadjusted original and adjusted values found in Equations 20 and 22 of this section.

(C) Equation and related statistics of the AR(1) autoregression model of the data set.

(D) Printed documentation of the intermediate calculations used to derive the autocorrelation coefficient and the Variance Inflation Factor.

(c) *Statistical Tests.* The owner or operator shall perform the F-test and correlation analysis as

Copyright 1993-1997, The Bureau of National Affairs, Inc.

data.

(8) If the collected data meet the requirements of the F-test, the correlation test, and the t-test at one or more, but not all, of the operating levels or fuel supplies, the owner or operator may elect to continue collecting the paired data for up to 1,440 additional operating hours and repeat the statistical tests using the data for the entire 30- to 90-day period.

(9) The owner or operator shall provide two separate time series data plots for the data at each operating level or fuel supply described in paragraphs (a)(4) and (a)(5) of this section. Each data plot shall have a horizontal axis that represents the clock hour and calendar date of the readings and shall contain a separate data point for every hour for the duration of the performance evaluation. The data plots shall show the following:

(i) Percentage difference versus time where the vertical axis represents the percentage difference between each paired hourly reading generated by the continuous emission monitoring system (or reference method) and the alternative emission monitoring system as calculated using the following equation:

$$\Delta e = \frac{e_p - e_v}{e_v} \times 100\%$$

(Eq. 10)

where,

Δe=Percentage difference between the readings generated by the alternative monitoring system and the continuous emission monitoring system.

e_p=Measured value from the alternative monitoring system.

e_v=Measured value from the continuous emission monitoring system.

[§75.41(a)(9)(i) corrected at 58 FR 40746, July 30, 1993]

(ii) Alternative monitoring system readings and continuous emission monitoring system (or reference method) readings versus time where the vertical axis represents hourly pollutant concentrations or volumetric flow, as appropriate, and two different symbols are used to represent the readings from the alternative monitoring system and the continuous emission monitoring system, respectively.

[§75.41(a)(9)(ii) corrected at 58 FR 40746, July 30, 1993]

(b) *Data screening and calculation adjustments.* In preparation for conducting the statistical tests, described in paragraph (c) of this section, the owner or operator may screen the data for

Copyright 1993-1997, The Bureau of National Affairs, Inc.

lognormality and time dependency autocorrelation. If either is detected, the owner or operator shall make the following calculation adjustments:

(1) *Lognormality.* The owner or operator shall conduct any screening and adjustment for lognormality according to the following procedures.

(i) Apply the log transformation to each measured value of either the certified continuous emissions monitoring system or certified flow monitor, using the following equation:

$l_v = \ln e_v$

(Eq. 11)

where,

e_v=Hourly value generated by the certified continuous emissions monitoring system or certified flow monitoring system

l_v=Hourly lognormalized data values for the certified monitoring system

and to each measured value, e_p, of the proposed alternative monitoring system, using the following equation to obtain the lognormalized data values, l_p:

$l_p = \ln e_p$

(Eq. 12)

where,

e_p=Hourly value generated by the proposed alternative monitoring system.

l_p=Hourly lognormalized data values for the proposed alternative monitoring system.

[§75.41(b)(1)(i) corrected at 58 FR 40746, July 30, 1993; amended at 60 FR 26513, May 17, 1995; 60 FR 40296, Aug. 8, 1995]

(ii) Separately test each set of transformed data, l_v and l_p, for normality, using the following:

(A) Shapiro-Wilk test;

(B) Histogram of the transformed data; and

(C) Quantile-Quantile plot of the transformed data.

(iii) The transformed data in a data set will be considered normally distributed if all of the following conditions are satisfied:

(A) The Shapiro-Wilk test statistic, W, is greater than or equal to 0.75 or is not statistically significant at α=0.05.

(B) The histogram of the data is unimodal and symmetric.

(C) The Quantile-Quantile plot is a diagonal straight line.

(iv) If both of the transformed data sets, l_v and l_p, meet the conditions for normality, specified in

Copyright 1993-1997, The Bureau of National Affairs, Inc.

paragraphs (b)(1)(iii)(A) through (C) of this section, the owner or operator may use the transformed data, l_v and l_p, in place of the original measured data values in the statistical tests for alternative monitoring systems as described in paragraph (c) of this section and in appendix A of this part.

(v) If the transformed data are used in the statistical tests in paragraph (c) of this section and in appendix A of this part, the owner or operator shall provide the following:

(A) Copy of the original measured values and the corresponding transformed data in printed and electronic format.

(B) Printed copy of the test results and plots described in paragraphs (b)(1)(i) through (iii) of this section.

(2) *Time dependency (autocorrelation).* The screening and adjustment for time dependency are conducted according to the following procedures:

(i) Calculate the degree of autocorrelation of the data on their LAG1 values, where the degree of autocorrelation is represented by the Pearson autocorrelation coefficient, ρ, computed from an AR(1) autoregression model, such that

$$p = \frac{COV(X'_i \cdot X''_i)}{Sx'_i \; Sx''_i}$$

(Eq. 13)

where,

x'_i=The original data value at hour i.

x''_i=The LAG1 data value at hour i.

$COV(x'_i, x''_i)$=The autocovariance of x'_i and defined by,

$$COV(x'_i, x''_i) = \frac{\sum_{i=1}^{n}\left(x'_i - \bar{x}'\right)\left(x''_i - \bar{x}''\right)}{(n-1)}$$

(Eq. 14)

where,

n=The total number of observations in which both the original value, X'_i, and the lagged value, X''_i, are available in the data set.

$S'_{x\,i}$=The standard deviation of the original data values, X'_i defined by,

Copyright 1993-1997, The Bureau of National Affairs, Inc.

$$S_{x_i'} = \sqrt{\frac{\sum_{i=1}^{n}\left(x_i' - \bar{x}'\right)^2}{n-1}}$$

(Eq. 15)
where,
$S''_{x\ i}$=The standard deviation of the LAG1 data values, X''_i, defined by

$$S_{x_i''} = \sqrt{\frac{\sum_{i=1}^{n}\left(x_i'' - \bar{x}''\right)^2}{n-1}}$$

(Eq. 16)
where,
X'=The mean of the original data values, X'_i defined by

$$\bar{x}' = \frac{\sum_{i=1}^{n} x_i'}{n}$$

(Eq. 17)
where,
X''=The mean of the LAG1 data values, X''_i, defined by

$$\bar{x}'' = \frac{\sum_{i=1}^{n} x_i''}{n}$$

(Eq. 18)
where,

[§75.41(b)(2)(i) corrected at 58 FR 34126, June 23, 1993; 58 FR 40746, July 30, 1993]

(ii) The data in a data set will be considered autocorrelated if the autocorrelation coefficient, ρ,

Copyright 1993-1997, The Bureau of National Affairs, Inc.

is significant at the 5 percent significance level. To determine if this condition is satisfied, calculate Z using the following equation:

$$z = 0.5\left[\ln\left(\frac{1+p}{1-p}\right)\right]\sqrt{n-3}$$

(Eq. 19)

If $Z > 1.96$, then the autocorrelation coefficient, ρ, is significant at the 5 percent significance level ($a = 0.05$).

(iii) If the data in a data set satisfy the conditions fo r autocorrelation, specified in paragraph (b)(2)(ii) of this section, the variance of the data, S^2, may be adjusted using the following equation:

$S^2_{adj} = VIF \times S^2$

(Eq. 20)

where,

S^2=The original, unadjusted variance of the data set.

VIF=The variance inflation factor, defined by

$$VIF = \frac{1}{\left[1 - \frac{2p}{(n-1)(1-p)} + \frac{2p(1-p^n)}{n(n-1)(1-p)^2}\right]}$$

(Eq. 21)

S^2_{adj}=The autocorrelation-adjusted variance for the data set.

(iv) The procedures described in paragraphs (b)(2)(i)-(iii) of this section may be separately applied to the following data sets in order to derive distinct autocorrelation coefficients and variance inflation factors for each data set:

(A) The set of measured hourly values, e_v, generated by the certified continuous emissions monitoring system or certified flow monitoring system.

[§75.41(b)(2)(iv)(A) corrected at 58 FR 40746, July 30, 1993; amended at 60 FR 26513, May 17, 1995; 60 FR 40296, Aug. 8, 1995]

(B) The set of hourly values, e_p, generated by the proposed alternative monitoring system,

(C) The set of hourly differences, e_v-e_p, between the hourly values, e_v, generated by the certified continuous emissions monitoring system or certified flow monitoring system and the hourly values, e_p, generated by the proposed alternative monitoring system.

Copyright 1993-1997, The Bureau of National Affairs, Inc.

described in this paragraph and the t-test for bias described in Appendix A of this part to demonstrate the precision of the alternative monitoring system.

(1) *F-test.* The owner or operator shall conduct the F-test according to the following procedures.

(i) Calculate the variance of the certified continuous emission monitoring system or certified flow monitor as applicable, S_v^2, and the proposed method, S_p^2, using the following equation.

$$S^2 = \frac{\sum_{i=1}^{n}(e_i - e_m)^2}{n-1}$$

(Eq. 23)

where,

e_i=Measured values of either the certified continuous emission monitoring system or certified flow monitor, as applicable, or proposed method.

e_m=Mean of either the certified continuous emission monitoring system or certified flow monitor, as applicable, or proposed method values.

n=Total number of paired samples.

[§75.41(c)(1)(i) corrected at 58 FR 40746, July 30, 1993; revised at 60 FR 26513, May 17, 1995; 60 FR 40296, Aug. 8, 1995]

(ii) Determine if the variance of the proposed method is significantly different from that of the certified continuous emission monitoring system or certified flow monitor, as applicable, by calculating the F-value using the following equation.

$$F = \frac{S_p^2}{S_v^2}$$

(Eq. 24)

Compare the experimental F-value with the critical value of F at the 95-percent confidence level with n-1 degrees of freedom. The critical value is obtained from a table for F-distribution. If the calculated F-value is greater than the critical value, the proposed method is unacceptable.

[§75.41(c)(1)(ii) corrected at 58 FR 40746, July 30, 1993; amended at 60 FR 26513, May 17, 1995; 60 FR 40296, Aug. 8, 1995]

(2) *Correlation analysis.* The owner or operator shall conduct the correlation analysis according to the following procedures.

(i) Plot each of the paired emissions readings as a separate point on a graph where the vertical axis represents the value (pollutant concentration or volumetric flow, as appropriate) generated by the alternative monitoring system and the horizontal axis represents the value (pollutant

Copyright 1993-1997, The Bureau of National Affairs, Inc.

concentration or volumetric flow, as appropriate) generated by the continuous emission monitoring system (or reference method). On the graph, draw a horizontal line representing the mean value, e_p, for the alternative monitoring system and a vertical line representing the mean value, e_v, for the continuous emission monitoring system where,

$$\overline{e_p} = \frac{\sum e_p}{n}$$

(Eq. 25)

$$\overline{e_v} = \frac{\sum e_v}{n}$$

(Eq. 26)

where,

e_p=Hourly value generated by the alternative monitoring system.

e_v=Hourly value generated by the continuous emission monitoring system.

n=Total number of hours for which data were generated for the tests.

A separate graph shall be produced for the data generated at each of the operating levels or fuel supplies described in paragraphs (a)(4) and (a)(5) of this section.

[§75.41(c)(2)(i) corrected at 58 FR 40746, July 30, 1993]

(ii) Use the following equation to calculate the coefficient of correlation, r, between the emissions data from the alternative monitoring system and the continuous emission monitoring system using all hourly data for which paired values were available from both monitoring systems.

(Eq. 27)

[§75.41(c)(2)(ii) the phrase Eq. 27 removed at 58 FR 34126, June 23, 1993; revised at 60 FR 26513, May 17, 1995; 60 FR 40296, Aug. 8, 1995]

(iii) If the calculated r-value is less than 0.8, the proposed method is unacceptable.

40 CFR 75.42 Reliability criteria.

To demonstrate reliability equal to or better than the continuous emission monitoring system, the owner or operator shall demonstrate that the alternative monitoring system is capable of providing valid 1- hr averages for 95.0 percent or more of unit operating hours over a 1-yr period and that the system meets the applicable requirements of Appendix B of this part.

Copyright 1993-1997, The Bureau of National Affairs, Inc.

$$r = \frac{\sum e_p e_v - \left(\sum e_p\right)\left(\sum e_v\right)/n}{\left(\left[\sum e_p^2 - \left(\sum e_p\right)^2/n\right]\left[\sum e_p^2 - \left(\sum e_v\right)^2/n\right]\right)^{(1/2)}}$$

40 CFR 75.43 Accessibility criteria.

To demonstrate accessibility equal to or better than the continuous emission monitoring system, the owner or operator shall provide reports and onsite records of emission data to demonstrate that the alternative monitoring system provides data meeting the requirements of subparts F and G of this part.

40 CFR 75.44 Timeliness criteria.

To demonstrate timeliness equal to or better than the continuous emission monitoring system, the owner or operator shall demonstrate that the alternative monitoring system can meet the requirements of subparts F and G of this part; can provide a continuous, quality-assured, permanent record of certified emissions data on an hourly basis; and can issue a record of data for the previous day within 24 hours.

40 CFR 75.45 Daily quality assurance criteria.

The owner or operator shall either demonstrate that daily tests equivalent to those specified in Appendix B of this part can be performed on the alternative monitoring system or demonstrate and document that such tests are unnecessary for providing quality-assured data.

40 CFR 75.46 Missing data substitution criteria.

The owner or operator shall demonstrate that all missing data can be accounted for in a manner consistent with the applicable missing data procedures in subpart D of this part.

40 CFR 75.47 Criteria for a class of affected units.

[§75.47 revised at 60 FR 26513, May 17, 1995; 60 FR 40296, Aug. 8, 1995]

(a) The owner or operator of an affected unit may represent a class of affected units for the purpose of applying to the Administrator for a class-approved alternative monitoring system.

(b) The owner or operator of an affected unit representing a class of affected units shall provide the following information:

(1) A description of the affected unit and how it appropriately represents the class of affected units;

(2) A description of the class of affected units, including data describing all the affected units which will comprise the class; and

(3) A demonstration that the magnitude of emissions of all units which will comprise the class of affected units are *de minimis*.

(c) If the Administrator determines that the emissions from all affected units which will comprise the class of units are *de minimis*, then the Administrator shall publish notice in the **Federal Register**, providing a 30-day period for public comment, prior to granting a

Copyright 1993-1997, The Bureau of National Affairs, Inc.

class-approved alternative monitoring system.

40 CFR 75.48 Petition for an alternative monitoring system.

[§75.48 revised at 60 FR 40296, Aug. 8, 1995]

(a) The designated representative shall submit the following information in the application for certification or recertification of an alternative monitoring system.

(1) Source identification information.

(2) A description of the alternative monitoring system.

(3) Data, calculations, and results of the statistical tests, specified in §75.41(c) of this part, including:

(i) Date and hour.

(ii) Hourly test data for the alternative monitoring system at each required operating level and fuel type.

(iii) Hourly test data for the continuous emissions monitoring system at each required operating level and fuel type.

(iv) Arithmetic mean of the alternative monitoring system measurement values, as specified in Equation 24 in §75.41(c) of this part, of the continuous emission monitoring system values, as specified on Equation 25 in §75.41(c) of this part, and of their differences.

(v) Standard deviation of the difference, as specified in Equation A-8 in appendix A of this part.

(vi) Confidence coefficient, as specified in Equation A-9 in appendix A of this part.

(vii) The bias test results as specified in §7.6.4 in appendix A of this part .

(viii) Variance of the measured values for the alternative monitoring system and of the measured values for the continuous emissions monitoring system, as specified in Equation 22 in §75.41(c) of this part.

(ix) F-statistic, as specified in Equation 23 in §75.41(c) of this part.

(x) Critical value of F at the 95-percent confidence level with n-1 degrees of freedom.

(xi) Coefficient of correlation, r, as specified in Equation 26 in §75.41(c) of this part.

(4) Data plots, specified in §§75.41(a)(9) and 75.41(c)(2)(i) of this part.

(5) Results of monitor reliability analysis.

(6) Results of monitor accessibility analysis.

Copyright 1993-1997, The Bureau of National Affairs, Inc.

(7) Results of monitor timeliness analysis.

(8) A detailed description of the process used to collect data, including location and method of ensuring an accurate assessment of operating hourly conditions on a real-time basis.

(9) A detailed description of the operation, maintenance, and quality assurance procedures for the alternative monitoring system as required in appendix B of this part.

(10) A description of methods used to calculate heat input or diluent gas concentration, if applicable.

(11) Results of tests and measurements (including the results of all reference method field test sheets, charts, laboratory analyses, example calculations, or other data as appropriate) necessary to substantiate that the alternative monitoring system is equivalent in performance to an appropriate, certified operating continuous emission monitoring system.

Subpart F—Recordkeeping Requirements

40 CFR 75.50 General recordkeeping provisions.

(a) *Recordkeeping requirements for affected sources.* The provisions of this section shall remain in effect prior to January 1, 1996. The owner or operator shall meet the requirements of either §§75.50 or 75.54 prior to January 1, 1996. On or after January 1, 1996, the owner or operator shall meet the requirements of §75.54 only. The owner or operator of any affected source subject to the requirements of this part shall maintain for each affected unit (or for each group of affected or nonaffected units utilizing a common stack and common monitoring systems pursuant to §75.16 through §75.18 of this part (referred to hereafter as "each affected unit")) a file of all measurements, data, reports, and other information required by this part at the source in a form suitable for inspection for at least three (3) years from the date of each record. This file shall contain the following information:

(1) The data and information required in paragraphs (b) through (f) of this section;

(2) The component data and information used to calculate values required in paragraphs (b) through (f) of this section;

(3) The current monitoring plan as specified in §75.53 of this part; and

(4) The quality control plan as described in Appendix B of this part.

[§75.50(a) revised at 60 FR 26513, May 17, 1995; 61 FR 25582, May 22, 1996]

(b) *Operating parameter record provisions.* The owner or operator shall record hourly the following information on unit operating time, heat input, and load for each affected unit, including individual affected units utilizing a common stack except as provided in paragraph (b)(6) of is

Copyright 1993-1997, The Bureau of National Affairs, Inc.

section for when units combust gas.

[§75.50(b) introductory text corrected at 58 FR 40746, July 30, 1993]

(1) Date and hour;

(2) Unit operating time (rounded to nearest hour);

(3) Total integrated hourly gross unit load (rounded to nearest MW_{ge}) (or steam load in lb/hr at stated temperature and pressure, rounded to the nearest lb/hr, if elected in the monitoring plan);

(4) Operating load range corresponding to total integrated gross load of 1-10, except for units using a common stack, which may use the number of unit load ranges up to 20, specified in the monitoring plan for the common stack;

(5) Total heat input (mmBtu, rounded to the nearest tenth); and

(6) For when units combust gas, the owner or operator may record total heat input (mmBtu, rounded to the nearest tenth) daily.

[§75.50(b)(6) corrected at 58 FR 40746, July 30, 1993]

(c) *SO_2 emission record provisions.* The owner or operator shall record hourly the information required by this paragraph for each affected unit or group of units using a common stack and common monitoring systems, except a gas-fired or oil-fired unit for which the owner or operator is using the optional protocol in Appendix D to this part for estimating SO_2 mass emissions:

(1) For SO_2 concentration, as measured and reported from the certified primary monitor, certified back-up or certified portable monitor, or other approved method of emissions determination:

(i) Monitor-channel identification code as provided for in §75.53;

(ii) Date and hour;

(iii) Hourly average SO_2 concentration (ppm, rounded to the nearest tenth),

[§75.50(c)(1)(iii) corrected at 58 FR 40746, July 30, 1993]

(iv) Hourly average SO_2 concentration (ppm, rounded to the nearest tenth) adjusted for bias, if bias adjustment factor is required as provided for in §75.24(d) of this part;

[§75.50(c)(1)(iv) corrected at 58 FR 40746, July 30, 1993]

(v) Percent monitor data availability (recorded to the nearest tenth of a percent) calculated pursuant to §75.32 of this part; and

Copyright 1993-1997, The Bureau of National Affairs, Inc.

(vi) Method of determination for hourly average SO_2 concentration using Codes 1-13 in Table 3 of this section.

[§75.50(c)(1)(vi) corrected at 58 FR 40746, July 30, 1993]

(2) For flow as measured and reported from the certified primary monitor, certified back-up or certified portable monitor or other approved method of emissions determination:

(i) Monitor-channel identification code as provided for in §75.53;

(ii) Date and hour;

(iii) Hourly average volumetric flow rate (in scfh, rounded to the nearest thou

[§75.50(c)(2)(iii) corrected at 58 FR 40746, July 30, 1993]

(iv) Hourly average volumetric flow rate (in scfh, rounded to the nearest thousand) adjusted for bias, if bias adjustment factor required as provided for in §75.24(d) of this part;

[§75.50(c)(2)(iv) corrected at 58 FR 40746, July 30, 1993]

(v) Hourly average moisture content of flue gases (volume fraction) where SO_2 concentration is measured on dry basis;

[§75.50(c)(2)(v) corrected at 58 FR 40746, July 30, 1993]

(vi) Percent monitor data availability, (recorded to the nearest tenth of a percent), calculated pursuant to §75.32 of this part; and

(vii) Method of determination for hourly average flow rate using Codes 1-13 in Table 3.

[§75.50(c)(2)(vii) corrected at 58 FR 40746, July 30, 1993]

(3) For SO_2 mass emissions as measured and reported from the certified primary monitoring system, certified back- up or certified portable monitoring systems, or other approved method of emissions determination:

(i) Date and hour;

(ii) Hourly average SO_2 mass emissions (lb/hr, rounded to the nearest tenth);

[§75.50(c)(3)(ii) corrected at 58 FR 34126, June 23, 1993; 58 FR 40746, July 30, 1993]

(iii) Hourly Average SO_2 mass emissions (lb/hr, rounded to the nearest tenth) adjusted for bias, if bias adjustment factor required, as provided for in §75.24(d) ; and

[§75.50(c)(3)(iii) corrected at 58 FR 40746, July 30, 1993]

Copyright 1993-1997, The Bureau of National Affairs, Inc.

(iv) Unique three-digit code identifying emissions formula used to derive hourly SO_2 mass emissions from SO_2 concentration and flow data in paragraphs (c)(1) and (c)(2) of this section as provided for in §75.53.

Table 3.--Codes for Method of Emissions and Flow Determination

Code	Hourly emissions/flow measurement or estimation method
1	Certified primary emission/flow monitoring system.
2	Certified back-up or certified portable emission/flow monitoring system.
3	Approved alternative monitoring system.
4	Reference Method: SO_2: Method 6, 6A, 6B, or 6C. Flow: Method 2, 2A, 2C, or 2D. No_x: Method 7, 7A, 7C, 7D, or 7E. CO_2 or O_2: Method 3, 3A or 3B.
5	For units with add-on SO_2 and/or NO_x emission controls: SO_2 concentration or NO_x emission rate estimate from Agency preapproved parametric monitoring method.
6	Average of the hourly SO_2 concentrations, flow, or NO_x emission rate for the hour before and the hour following a missing data period.
7	Average hourly SO_2 concentration, flow rate, or NO_x emission rate using initial missing data procedures.
8	90th percentile hourly SO_2 concentration, flow rate, or NO_x emission rate.
9	95th percentile hourly SO_2 concentration, flow rate, or NO_x emission rate.
10	Maximum hourly SO_2 concentration, flow rate, or NO_x emission rate.
11	Average hourly flow rate or NO_x emission rate in corresponding load range.
12	Maximum potential concentration of SO_2 maximum potential flow rate, or NO_x emission rate corresponding to maximum potential concentration of NO_x and minimum O_2 or maximum CO_2 concentration, as determined using section 2.1 of Appendix A of the part.
13	Other data (specify method).

[§75.50 Table 3 corrected at 58 FR 40746, July 30, 1993]

(d) *NO_x emission record provisions.* The owner or operator shall record hourly the information required by this paragraph for each affected unit, except for a gas-fired peaking unit or oil-fired

Copyright 1993-1997, The Bureau of National Affairs, Inc.

peaking unit for which the owner or operator is using the optional protocol in Appendix E to this part for estimating NO_x emission rate. For each NO_x emission rate as measured and reported from the certified primary monitor, certified back-up or certified portable monitor, or other approved method of emissions determination:

[§75.50(d) corrected at 58 FR 40746, July 30, 1993]

(1) Monitor-channel identification code as provided for in §75.53;

(2) Date and hour;

(3) Hourly average NO_x concentration (ppm, rounded to the nearest tenth);

[§75.50(d)(3) corrected at 58 FR 40746, July 30, 1993]

(4) Hourly average diluent gas concentration (percent O_2 or percent CO_2, rounded to the nearest tenth);

[§75.50(d)(4) corrected at 58 FR 40746, July 30, 1993]

(5) Hourly average NO_x emission rate (lb/mmBtu, rounded to nearest hundredth);

[§75.50(d)(5) corrected at 58 FR 40746, July 30, 1993]

(6) Hourly average NO_x emission rate (lb/mmBtu, rounded to nearest hundredth) adjusted for bias, if bias adjustment factor is required as provided for in §75.24(d) of this part;

[§75.50(d)(6) corrected at 58 FR 40746, July 30, 1993]

(7) Percent monitoring system data availability, (recorded to the nearest tenth of a percent), calculated pursuant to §75.32of this part;

(8) Method of determination for hourly average NO_x emission rate using Codes 1- 13 in Table 3; and

[§75.50(d)(8) corrected at 58 FR 40746, July 30, 1993]

(9) Unique three-digit code identifying emissions formula used to derive hourly average NO_x emission rate, as provided for in §75.53.

[§75.50(d)(9) corrected at 58 FR 40746, July 30, 1993]

(e) *CO_2 emission record provisions.* The owner or operator shall record or calculate CO_2 emissions for each affected unit using one of the following methods specified in this section:

(1) If the owner or operator chooses to use a CO_2 continuous emission monitoring system (or

Copyright 1993-1997, The Bureau of National Affairs, Inc.

an O_2 continuous emission monitor and flow monitor as specified in Appendix F), then the owner or operator shall record hourly the following information for CO_2 mass emissions, as measured and reported from the certified primary monitor, certified back-up or certified portable monitor, or other approved method of emissions determination:

(i) Monitor-channel identification code as provided for in §75.53;

(ii) Date and hour;

(iii) Hourly average CO_2 (or O_2) concentration (in percent, rounded to the nearest tenth);

[§75.50(e)(1)(iii) corrected at 58 FR 40746, July 30, 1993]

(iv) Hourly average volumetric flow rate (scfh, rounded to the nearest scf);

[§75.50(e)(1)(iv) corrected at 58 FR 40746, July 30, 1993]

(v) Hourly average CO_2 mass emissions (tons/hr, rounded to the nearest tenth);

[§75.50(e)(1)(v) corrected at 58 FR 40746, July 30, 1993]

(vi) Percent monitor data availability (recorded to the nearest tenth of a percent); calculated pursuant to §75.32 of this part;

(vii) Method of determination for hourly average CO_2 mass emissions using Codes 1-13 in Table 3; and

[§75.50(e)(1)(vii) corrected at 58 FR 40746, July 30, 1993]

(viii) Unique three-digit emissions formula used to derive hourly average CO_2 mass emissions, as provided for in §75.53.

[§75.50(e)(1)(viii) corrected at 58 FR 40746, July 30, 1993]

(2) As an alternative to §75.50(e)(1) , the owner or operator may use the procedures in §75.13 and in Appendix G to this part, and shall record daily the following information for CO_2 mass emissions:

(i) Date;

(ii) Daily combustion-formed CO_2 mass emissions (tons/day, rounded to the nearest tenth);

[§75.50(e)(2)(ii) corrected at 58 FR 40746, July 30, 1993]

(iii) For coal-fired units, flag indicating whether optional procedure to adjust combustion-formed CO_2 mass emissions for carbon retained in flyash has been used and, if so, the adjustment;

Copyright 1993-1997, The Bureau of National Affairs, Inc.

(iv) For a unit with a wet flue gas desulfurization system or other controls generating CO_2, daily sorbent-related CO_2 mass emissions (tons/day, rounded to the nearest tenth); and

[§75.50(e)(2)(iv) corrected at 58 FR 40746, July 30, 1993]

(v) For a unit with a wet flue gas desulfurization system or other controls generating CO_2, total daily CO_2 mass emissions (tons/day, rounded to the nearest tenth) as sum of combustion-formed emissions and sorbent-related emissions.

[§75.50(e)(2)(v) corrected at 58 FR 40746, July 30, 1993]

(f) *Opacity record provisions.* The owner or operator shall record every six minutes (or other averaging period specified by the State or local air pollution control agency) the information required by this paragraph for each affected unit, except as provided for in §75.14(b), (c), and (d) . The owner or operator shall also keep records of all incidents of opacity monitor downtime during unit operation, including reason(s) for the monitor outage(s) and any corrective action(s) taken for opacity, as measured and reported by the continuous opacity monitoring system:

(1) Monitor-channel identification code;

(2) Date, hour, and minute;

(3) Average opacity of emissions (in percent opacity);

(4) If the average opacity of emissions exceeds the applicable standard, then a code indicating such an exceedance has occurred; and

(5) Percent monitor data availability, recorded to the nearest tenth of a percent, calculated pursuant to §75.32 of this part.

40 CFR 75.51 General recordkeeping provisions for specific situations.

(a) *Specific SO_2 emission record provisions for units with qualifying Phase I technology.* In addition to the SO_2 emissions information required in §75.50(c) of this part, from January 1, 1997, through December 31, 1999, the owner or operator shall record the applicable information in this paragraph for each affected unit on which SO_2 emission controls have been installed and operated for the purpose of meeting qualifying Phase I technology requirements pursuant to §72.42 of this chapter and §75.15.

(1) For units with post-combustion emission controls:

(i) Monitor-channel identification codes for each inlet and outlet SO_2-diluent continuous emission monitoring system;

(ii) Date and hour;

Copyright 1993-1997, The Bureau of National Affairs, Inc.

(iii) Hourly average inlet SO_2 emission rate (lb/mmBtu, rounded to nearest hundredth);

[§75.51(a)(1)(iii) corrected at 58 FR 40746, July 30, 1993]

(iv) Hourly average inlet SO_2 concentration (ppm, rounded to the nearest tenth) adjusted for bias, if bias adjustment factor required (see §75.24(d) of this part);

[§75.51(a)(1)(iv) corrected at 58 FR 40746, July 30, 1993]

(v) Hourly average outlet SO_2 emission rate (lb/mmBtu, rounded to nearest hundredth);

[§75.51(a)(1)(v) corrected at 58 FR 40746, July 30, 1993]

(vi) Hourly average outlet SO_2 concentration (ppm, rounded to the nearest tenth) adjusted for bias, if bias adjustment factor required (see §75.24(d) of this part);

[§75.51(a)(1)(vi) corrected at 58 FR 40746, July 30, 1993]

(vii) Percent data availability for both inlet and outlet SO_2-diluent continuous emission monitoring systems (recorded to the nearest tenth of a percent), calculated pursuant to Equation 8 of §75.32 (for the first 8,760 unit operating hours following initial certification) and Equation 9 of §75.32, thereafter; and

(viii) Emissions formula used to derive hourly average inlet and outlet SO_2 emission rates for each affected unit or group of units using a common stack.

[§75.51(a)(1)(viii) corrected at 58 FR 40746, July 30, 1993]

(2) For units with combustion and/or pre-combustion emission controls:

(i) Monitor-channel identification codes for each outlet SO_2-diluent continuous emission monitoring system;

[§75.51(a)(2)(i) corrected at 58 FR 40746, July 30, 1993]

(ii) Date and hour;

(iii) Hourly average outlet SO_2 emission rate (lb/mmBtu, rounded to nearest hundredth);

[§75.51(a)(2)(iii) corrected at 58 FR 40746, July 30, 1993]

(iv) For units with combustion controls, average daily inlet SO_2 emission rate (lb/mmBtu, rounded to nearest hundredth), determined by coal sampling and analysis procedures in Appendix F to this part; and

(v) For units with pre-combustion controls (i.e., fuel pretreatment), fuel analysis demonstrating

Copyright 1993-1997, The Bureau of National Affairs, Inc.

the weight, sulfur content, and gross calorific value of the product and raw fuel lots.

(b) *Specific parametric data record provisions for calculating substitute emissions data for units with add-on emission controls*. In addition to the SO_2 and NO_x emissions data to be recorded under §75.50, the owner or operator of an affected unit with add-on emission controls where the owner or operator is using the approved site-specific parametric monitoring procedures for calculation of substitute data in accordance with §75.34, shall also record for each hour during each missing data period the applicable information in this paragraph (b):

[§75.51(b) introductory text corrected at 58 FR 40746, July 30, 1993]

(1) For units with add-on SO_2 emission controls, for each hour of missing SO_2 concentration or volumetric flow data:

(i) The information required in §75.50(b) of this part for SO_2 concentration and volumetric flow if either one of these monitors is still operating;

(ii) Date and hour;

(iii) Number of operating scrubber modules;

(iv) Feedrate of makeup slurry to each operating scrubber module (gal/min);

(v) Average pressure differential across each operating scrubber module (inches of water column);

(vi) For a unit with a wet flue gas desulfurization system, an inline measure of absorber pH for each operating scrubber module;

(vii) For a unit with a dry flue gas desulfurization system, the inlet and outlet temperatures across each operating scrubber module;

(viii) For a unit with a dry flue gas desulfurization system, the slurry feed rate (gal/min) to the atomizer nozzle; and

[The second §75.51(b)(1)(vii) corrected and redesignated as new (viii) at 58 FR 40746, July 30, 1993]

(ix) Method of determination of SO_2 concentration and volumetric flow, using Codes 1-13 in Table 3 of §75.50 of this part.

[§75.51(b)(1)(ix) corrected at 58 FR 40746, July 30, 1993]

(2) For units with add-on NO_x emission controls, for each hour of missing NO_x emission rate data:

(i) Date and hour;

Copyright 1993-1997, The Bureau of National Affairs, Inc.

(ii) Inlet air flow rate (acfh, rounded to the nearest thousand);

(iii) Excess O_2 concentration of flue gas at stack outlet (rounded to nearest tenth of a percent);

(iv) CO concentration of flue gas at stack outlet (ppm, rounded to the nearest tenth);

(v) Temperature of flue gas at furnace exit or economizer outlet duct (°F); and

(vi) Other parameters specific to NO_x emission controls (e.g., average hourly reagent feedrate).

(c) *Specific SO_2 Emission Record Provisions for Gas-Fired or Oil-Fired Units Using Optional Protocol in Appendix D to This Part.* In lieu of recording the information in §75.50(c) of this section, the owner or operator shall record the applicable information in this paragraph for each affected gas-fired or oil-fired unit for which the owner or operator is using the optional protocol in Appendix D to this part for estimating SO_2 mass emissions.

(1) When the unit is combusting oil:

(i) Date and hour;

(ii) Hourly flow rate of oil with the units in which oil flow is recorded, (gal/hr, lb/hr, or bbl/hr, rounded to the nearest tenth);

[§75.51(c)(1)(ii) corrected at 58 FR 40746, July 30, 1993]

(iii) Sulfur content of daily oil sample, rounded to nearest tenth of a percent;

(iv) Method of oil sampling (flow proportional, continuous drip, or manual);

(v) Mass of oil combusted each hour (lb/hr, rounded to the nearest tenth); and

(vi) Hourly SO_2 mass emissions (lb/hr, rounded to the nearest tenth).

[§75.51(c)(1)(vi) corrected at 58 FR 40746, July 30, 1993]

(2) for gas-fired units or oil-fired units using the optional protocol in Appendix D of this part of daily manual oil sampling, when the unit is combusting oil, the highest sulfur content recorded from the most recent 30 daily oil samples rounded to nearest tenth of a percent.

(3) When the unit is combusting natural gas,

(i) Date and hour; and

(ii) Daily heat input from natural gas according to procedures in Appendix F to this part (mmBtu, rounded to the nearest tenth).

(iii) Sulfur content or SO_2 emission rate, in one of the following formats, in accordance with the

Copyright 1993-1997, The Bureau of National Affairs, Inc.

appropriate procedure from Appendix D of this part:

(A) Sulfur content of daily gas sample, (rounded to the nearest 0.1 grains/100 scf) and the volume of gas combusted per day, in 100 scf; or

(B) SO_2 emission rate from NADB (in lb/mmBtu).

(d) *Specific NO_x Emission Record Provisions for Gas-Fired Peaking Units or Oil-Fired Peaking Units Using Optional Protocol in Appendix E of This Part.* In lieu of recording the information in paragraph §75.50(d), the owner or operator shall record the applicable information in this paragraph for each affected gas-fired peaking unit or oil-fired peaking unit for which the owner or operator is using the optional protocol in Appendix E to this part for estimating NO_x emission rate.

(1) When the unit is combusting oil,

(i) Date and hour;

(ii) Average hourly fuel flow of oil with the units in which oil flow is recorded (gal/hour or bbl/hour);

[§75.51(d)(1)(ii) corrected at 58 FR 40746, July 30, 1993]

(iii) NO_x emission rate F-factor for oil combusted according to procedure in Appendix E to this part; and

(iv) Average hourly NO_x emission rate (lb/mmBtu, rounded to nearest tenth).

[§75.51(d)(1)(iv) corrected at 58 FR 40746, July 30, 1993]

(2) When the unit is combusting natural gas,

(i) Date and hour;

(ii) Average daily fuel flow of natural gas (million cubic ft);

(iii) NO_x emission rate F-factor for gas combusted according to procedure in Appendix E to this part; and

(iv) Average daily NO_x emission rate (lb/mmBtu, rounded to nearest tenth).

(e) The provisions of this section shall remain in effect prior to January 1, 1996. The owner or operator shall meet the requirements of either §§75.51 or 75.55 prior to January 1, 1996. On or after January 1, 1996, the owner or operator shall meet the requirements of §75.55 only.

[§75.51(e) added at 60 FR 26513, May 17, 1995]

Copyright 1993-1997, The Bureau of National Affairs, Inc.

40 CFR 75.52 Certification, quality assurance and quality control record provisions.

(a) The owner or operator shall record the applicable information in this section for each certified monitor or certified monitoring system (including certified backup or certified portable monitors) measuring and recording emissions or flow from an affected unit.

(1) For each SO_2 or NO_x pollutant concentration monitor, flow monitor, CO_2 monitor, or diluent gas monitor, the owner or operator shall record the following for all daily and 7-day calibration error tests, including any follow-up tests after corrective action:

(i) Monitor channel identification code;

(ii) Instrument span;

(iii) Date and hour;

(iv) Reference value, (i.e., calibration gas concentration or reference signal value, in ppm or other appropriate units);

(v) Observed value (monitor response during calibration, in ppm or other appropriate units);

(vi) Percent calibration error (rounded to nearest tenth of a percent);

(vii) Number of out-of-control hours, if any, following test; and

(viii) Description of any adjustments, corrective actions, or maintenance following test.

(2) For each flow monitor, the owner or operator shall record the following for all daily interference checks, including any follow-up tests after corrective action:

(i) Code indicating whether monitor passes or fails the interference check;

(ii) Number of out-of-control hours, if any, following test; and

(iii) Description of any adjustments, corrective actions, or maintenance following test.

(3) For each SO_2 or NO_x pollutant concentration monitor, CO_2 monitor, or diluent gas monitor, the owner or operator shall record the following for the initial and all subsequent linearity check(s), including any follow-up tests after corrective action:

(i) Monitor channel identification code;

(ii) Instrument span;

(iii) Date and hour;

Copyright 1993-1997, The Bureau of National Affairs, Inc.

(iv) Reference value (i.e., reference gas concentration, in ppm or other appropriate units);

(v) Observed value (average monitor response at each reference gas concentration, in ppm or other appropriate units);

(vi) Percent error at each of three reference gas concentrations (rounded to nearest tenth of a percent);

(vii) Number of out-of-control hours, if any, following test; and

(viii) Description of any adjustments, corrective action, or maintenance following test.

(4) For each flow monitor, where applicable, the owner or operator shall record the following for all quarterly leak checks, including any follow-up tests after corrective action:

(i) Code indicating whether monitor passes or fails the quarterly leak check;

(ii) Number of out-of-control hours, if any, following test; and

(iii) Description of any adjustments, corrective actions, or maintenance following test.

(5) For each SO_2 pollutant concentration monitor, flow monitor, CO_2 pollutant concentration monitor; NO_x continuous emission monitoring system, SO_2-diluent continuous emission monitoring system, and approved alternative monitoring system, the owner or operator shall record the following information for the initial and all subsequent relative accuracy tests and test audits:

(i) Date and hour;

(ii) Reference method(s) used;

(iii) Individual test run data from the relative accuracy test audit for the SO_2 concentration monitor, flow monitor, CO_2 pollutant concentration monitor, NO_x continuous emission monitoring system, SO_2-diluent continuous emission monitoring system, or approved alternative monitoring systems, including:

(A) Date, hour, and minute of beginning of test run,

(B) Date, hour, and minute of end of test run,

(C) Monitor-channel identification code,

(D) Run number,

(E) Run data for monitor;

(F) Run data for reference method; and

Copyright 1993-1997, The Bureau of National Affairs, Inc.

(G) Flag value (0 or 1) indicating whether run has been used in calculating relative accuracy and bias values.

(iv) Calculations and tabulated results, as follows:

(A) Arithmetic mean of the monitoring system measurement values, reference method values, and of their differences, as specified in Equation A-7 in appendix A to this part.

(B) Standard deviation, as specified in Equation A-8 in appendix A to this part.

(C) Confidence coefficient, as specified in Equation A-9 in appendix A to this part.

(D) Relative accuracy test results, as specified in Equation A-10 in appendix A to this part. (For the 3-level flow monitor test only, relative accuracy test results should be recorded at each of three gas velocities. Each of these three gas velocities shall be expressed as a total integrated gross unit load, rounded to the nearest MWe.)

(E) Bias test results as specified in section 7.6.4 in appendix A to this part.

(F) Bias adjustment factor from Equations A-11 and A-12 in appendix A to this part for any monitoring system or component that failed the bias test and 1.0 for any monitoring system or component that passed the bias test. (For flow monitors only, bias adjustment factors should be recorded at each of three gas velocities).

(v) Number of out-of-control hours, if any, following test.

[Former §75.52(a)(5)(iv)(G) redesignated as (v) at 58 FR 40746, July 30, 1993]

(vi) Description of any adjustment, corrective action, or maintenance following test.

[Former §75.52(a)(5)(iv)(H) redesignated as (vi) at 58 FR 40746, July 30, 1993]

(6) F-factor value(s) used to convert NO_x pollutant concentration and diluent gas (O_2 or CO_2) concentration measurements into NO_x emission rates (in lb/mmBtu), heat input or CO_2 emissions.

(7) Results of all trial runs and certification tests and quality assurance activities and measurements (including all reference method field test sheets, charts, records of combined system responses, laboratory analyses, and example calculations) necessary to substantiate compliance with all relevant appendices in this part.

(b) The provisions of this section shall remain in effect prior to January 1, 1996. The owner or operator shall meet the requirements of either §§75.52 or 75.56 prior to January 1, 1996. On or after January 1, 1996, the owner or operator shall meet the requirements of §75.56 only.

[§75.52(b) added at 60 FR 26513, May 17, 1995]

Copyright 1993-1997, The Bureau of National Affairs, Inc.

40 CFR 75.53 Monitoring plan.

(a) *General provisions.* The owner or operator of an affected unit shall prepare and maintain a monitoring plan . Except as provided in paragraph (d) of this section, a monitoring plan shall contain sufficient information on the continuous emission or opacity monitoring systems or excepted monitoring systems under appendix D or E of this part and the use of data derived from these systems to demonstrate that all unit SO_2 emissions, NO_X emissions, CO_2 emissions, and opacity are monitored and reported.

[§75.53(a) introductory paragraph corrected at 58 FR 40746, July 30, 1993; revised at 60 FR 26513, May 17, 1995]

(b) Whenever the owner or operator makes a replacement, modification, or change, either in the certified continuous emission monitoring system or continuous opacity monitoring system or excepted monitoring systems under appendix D or E of this part, including a change in the automated data acquisition and handling system or in the flue gas handling system, that requires recertification, then the owner or operator shall update the monitoring plan.

[§75.53(b) revised at 60 FR 26513, May 17, 1995]

(c) *Contents of the monitoring plan.* Each monitoring plan shall contain the following:

[§75.53(c) introductory text amended at 60 FR 26513, May 17, 1995]

(1) Precertification information, including, as applicable, the identification of the test strategy, protocol for the relative accuracy test audit, other relevant test information, span calculations, and apportionment strategies under §§75.13 through 75.17 of this part.

[§75.53(c)(1) amended at 60 FR 26513, May 17, 1995]

(2) Unit table. A table identifying ORISPL numbers developed by the Department of Energy and used in the National Allowance Database, for all affected units involved in the monitoring plan with the following information for each unit:

[§75.53(c)(2) corrected at 58 FR 40746, July 30, 1993]

(i) Short name;

(ii) Classification of unit as one of the following: Phase I (including substitution or compensating units), Phase II, new, or nonaffected;

[§75.53(c)(2)(ii) amended at 60 FR 26513, May 17, 1995]

(iii) Type of boiler (or boilers for a group of units using a common stack);

(iv) Type of fuel(s) fired, by boiler, and if more than one fuel, the fuel classification of the boiler;

Copyright 1993-1997, The Bureau of National Affairs, Inc.

(v) Type(s) of emission controls for SO_2, NO_x, and particulates installed or to be installed, including specifications of whether such controls are pre-combustion, post-combustion, or integral to the combustion process; and

(vi) Identification of all units using a common stack.

(3) Description of monitor site location. Description of site locations for each monitoring component in the continuous emission or opacity monitoring systems, including schematic diagrams and engineering drawings specified in paragraphs (c)(7) and (c)(8) of this section, and any other documentation that demonstrate each monitor location meets the appropriate siting criteria.

(4) *Monitoring component table.* Identification and description of each monitoring component (including each monitor and its identifiable components such as analyzer and/or probe) in the continuous emission monitoring systems (i.e., SO_2 pollutant concentration monitor, flow monitor, moisture monitor; NO_X pollutant concentration monitor and diluent gas monitor) the continuous opacity monitoring system, or excepted monitoring system (i.e., fuel flowmeter, data acquisition and handling system), including:

[§75.53(c)(4) introductory text amended at 60 FR 26513, May 17, 1995]

(i) Manufacturer model number and serial number;

(ii) Component/system identification code assigned by the utility to each identifiable monitoring component (such as the analyzer and/or probe). The code shall use a six-digit format, unique to each monitoring component, where the first three digits indicate the number of the component and the second three digits indicate the system to which the component belongs;

[§75.53(c)(4)(ii) amended at 60 FR 26513, May 17, 1995]

(iii) Actual or projected installation date (month and year); and

(iv) A brief description of the component type or method of operation, such as in situ pollutant concentration monitor or thermal flow monitor.

(v) A brief description of the flow monitor that is sufficiently detailed to allow a determination of whether the applicable interference check design specification meets the requirements specified in Appendix A of this part.

(vi) A designation of the system as a primary, redundant backup, non-redundant backup or reference method backup system, as provided for in §75.10(e).

[§75.53(c)(4)(vi) amended at 60 FR 26513, May 17, 1995]

(5) Data acquisition and handling system table. Identification and description of all major

Copyright 1993-1997, The Bureau of National Affairs, Inc.

hardware and software components of the automated data acquisition and handling system, including:

(i) For hardware components, the manufacturer, model number, and actual or projected installation date;

(ii) For software components, identification of the provider and a brief description of features;

[§75.53(c)(5)(ii) amended at 60 FR 26513, May 17, 1995]

(iii) A data flow diagram denoting the complete information handling path from output signals of continuous emission monitoring system components to final reports;

(iv) A copy of the test results verifying the accuracy of the automated data acquisition and handling system (once such results are available).

[§75.53(c)(6)—(9) amended at 60 FR 26513, May 17, 1995]

(6) *Emissions formula table.* A table giving explicit formulas for each reported unit emission parameter, using component/system identification codes to link continuous emission monitoring system or excepted monitoring system observations with reported concentrations, mass emissions, or emission rates, according to the conversions listed in appendix D, E, or F to this part. The formulas must contain all constants and factors required to derive mass emissions or emission rates from component/system code observations, and each emissions formula is identified with a unique three digit code.

(7) *Schematic stack diagrams.* For units monitored by a continuous emission or opacity monitoring system, a schematic diagram identifying entire gas handling system from boiler to stack for all affected units, using identification numbers for units, monitor components, and stacks corresponding to the identification numbers provided in paragraphs (c)(2), (c)(4), (c)(5) , and (c)(6) of this section. The schematic diagram must depict stack height and the height of any monitor locations. Comprehensive and/or separate schematic diagrams shall be used to describe groups of units using a common stack.

(8) *Stack and duct engineering diagrams* . For units monitored by a continuous emission or opacity monitoring system, stack and duct engineering diagrams showing the dimensions and location of fans, turning vanes, air preheaters, monitor components, probes, reference method sampling ports and other equipment which affects the monitoring system location, performance or quality control checks.

[§75.53(c)(8) corrected at 58 FR 40746, July 30, 1993]

(9) Inside crosssectional area (ft ^{2}) at flue exit and at flow monitoring location.

[§75.53(c)(9) corrected at 58 FR 40746, July 30, 1993]

Copyright 1993-1997, The Bureau of National Affairs, Inc.

(10) *Span and calibration gas.* A table or description identifying maximum potential concentration, maximum expected concentration (if applicable), maximum potential flow rate, maximum potential NO_X emission rate, span value, and full- scale range for each SO_2, NO_X, CO_2, O_2, or flow component monitor. In addition, the table must identify calibration gas levels for the calibration error test and the linearity check, and calculations made to determine each span value.

[§75.53(c)(10) added at 60 FR 26513, May 17, 1995]

(d) *Contents of monitoring plan for specific situations.* The following additional information shall be included in the monitoring plan for gas-fired or oil-fired units:

[§75.53(d) introductory text amended at 61 FR 59161, Nov. 20, 1996]

(1) For each gas-fired unit or oil-fired unit for which the owner or operator uses the optional protocol in appendix D of this part for estimating SO_2 mass emissions or appendix E of this part for estimating NO_X emission rate (using a fuel flow meter), the designated representative shall include in the monitoring plan:

(i) A description of the fuel flowmeter (and data demonstrating its flow meter accuracy, when available);

(ii) The installation location of each fuel flowmeter;

(iii) The fuel sampling location(s); and

(iv) Procedures used for calibrating each fuel flowmeter.

[§75.53(d)(1) revised at 60 FR 26513, May 17, 1995]

(2) For each gas-fired peaking unit and oil-fired peaking unit for which the owner or operator uses the optional procedures in appendix E of this part for estimating NO_X emission rate, the designated representative shall include in the monitoring plan:

(i) A protocol containing methods used to perform the baseline or periodic NO_X emission test, and a copy of initial performance test results (when such results are available);

(ii) Unit operating and capacity factor information demonstrating that the unit qualifies as a peaking unit, as defined in §72.2 of this chapter; and

(iii) Unit operating parameters related to NO_X formation by the unit.

[§75.53(d)(2) revised at 60 FR 26513, May 17, 1995]

(3) For each gas-fired unit and diesel- fired unit or unit with a wet flue gas pollution control

Copyright 1993-1997, The Bureau of National Affairs, Inc.

system for which the designated representative claims an opacity monitoring exemption under §75.14, the designated representative shall include in the monitoring plan information demonstrating that the unit qualifies for the exemption.

[§75.53(d)(3) added at 60 FR 26513, May 17, 1995]

(4) [Reserved]

[§75.53(d)(4) added at 60 FR 26566, May 17, 1995; removed at 61 FR 59161, Nov. 20, 1996]

[Former §75.53(c)(10) redesignated as new (d) at 58 FR 40746, July 30, 1993; revised at 60 FR 26566, May 17, 1995]

40 CFR 75.54 General recordkeeping provisions.

[§75.54 added at 60 FR 26513, May 17, 1995]

(a) *Recordkeeping requirements for affected sources.* On or after January 1, 1996, the owner or operator shall meet the requirements of this section. The owner or operator of any affected source subject to the requirements of this part shall maintain for each affected unit a file of all measurements, data, reports, and other information required by this part at the source in a form suitable for inspection for at least three (3) years from the date of each record. Unless otherwise provided, throughout this subpart the phrase "for each affected unit" also applies to each group of affected or nonaffected units utilizing a common stack and common monitoring systems, pursuant to §§75.13 through 75.18, or utilizing a common pipe header and common fuel flowmeter, pursuant to section 2.1.2 of appendix D of this part. The file shall contain the following information:

(1) The data and information required in paragraphs (b) through (f) of this section, beginning with the earlier of the date of provisional certification, or the deadline in §75.4(a), (b) or (c);

(2) The supporting data and information used to calculate values required in paragraphs (b) through (f) of this section, excluding the subhourly data points used to compute hourly averages under §75.10(d), beginning with the earlier of the date of provisional certification, or the deadline in §75.4(a), (b) or (c);

(3) The data and information required in §75.55 of this part for specific situations, as applicable, beginning with the earlier of the date of provisional certification, or the deadline in §75.4(a), (b) or (c);

(4) The certification test data and information required in §75.56 for tests required under §75.20, beginning with the date of the first certification test performed, and the quality assurance and quality control data and information required in §75.56 for tests and the quality assurance/quality control plan required under §75.21 and appendix B of this part, beginning with the date of provisional certification;

Copyright 1993-1997, The Bureau of National Affairs, Inc.

(5) The current monitoring plan as specified in §75.53, beginning with the initial submission required by §75.62; and

(6) The quality control plan as described in appendix B to this part , beginning with the date of provisional certification.

(b) *Operating parameter record provisions.* The owner or operator shall record for each hour the following information on unit operating time, heat input, and load separately for each affected unit, and also for each group of units utilizing a common stack and a common monitoring system or utilizing a common pipe header and common fuel flowmeter, except that separate heat input data for each unit shall not be required after January 1, 2000 for any unit, other than an opt-in source, that does not have a NO_X emission limitation under part 76 of this chapter.

(1) Date and hour;

(2) Unit operating time (rounded up to nearest 15 minutes);

(3) Total hourly gross unit load (rounded to nearest MWge) (or steam load in lb/hr at stated temperature and pressure, rounded to the nearest 1000 lb/hr, if elected in the monitoring plan);

(4) Operating load range corresponding to total gross load of 1-10, except for units using a common stack or common pipe header, which may use the number of unit load ranges up to 20 for flow, as specified in the monitoring plan; and

(5) Total heat input (mmBtu, rounded to the nearest tenth).

(c) *SO_2 emission record provisions.* The owner or operator shall record for each hour the information required by this paragraph for each affected unit or group of units using a common stack and common monitoring systems, except as provided under §75.11(e) or for a gas- fired or oil-fired unit for which the owner or operator is using the optional protocol in appendix D to this part for estimating SO_2 mass emissions:

(1) For SO_2 concentration, as measured and reported from each certified primary monitor, certified back-up monitor, or other approved method of emissions determination:

(i) Component-system identification code as provided for in §75.53;

(ii) Date and hour;

(iii) Hourly average SO_2 concentration (ppm, rounded to the nearest tenth);

(iv) Hourly average SO_2 concentration (ppm, rounded to the nearest tenth) adjusted for bias, if bias adjustment factor is required as provided for in §75.24(d);

(v) Percent monitor data availability (recorded to the nearest tenth of a percent) calculated

Copyright 1993-1997, The Bureau of National Affairs, Inc.

pursuant to §75.32; and

(vi) Method of determination for hourly average SO_2 concentration using Codes 1-15 in Table 4 of this section.

(2) For flow as measured and reported from each certified primary monitor, certified back-up monitor or other approved method of emissions determination:

(i) Component/system identification code as provided for in §75.53;

(ii) Date and hour;

(iii) Hourly average volumetric flow rate (in scfh, rounded to the nearest thousand);

(iv) Hourly average volumetric flow rate (in scfh, rounded to the nearest thousand) adjusted for bias, if bias adjustment factor required as provided for in §75.24(d);

(v) Hourly average moisture content of flue gases (percent, rounded to the nearest tenth) where SO_2 concentration is measured on dry basis;

(vi) Percent monitor data availability (recorded to the nearest tenth of a percent), calculated pursuant to §75.32; and

(vii) Method of determination for hourly average flow rate using Codes 1-15 in Table 4.

(3) For SO_2 mass emissions as measured and reported from the certified primary monitoring system(s), certified redundant or non-redundant back-up monitoring system(s), or other approved method(s) of emissions determination:

(i) Date and hour;

(ii) Hourly SO_2 mass emissions (lb/hr, rounded to the nearest tenth);

(iii) Hourly SO_2 mass emissions (lb/hr, rounded to the nearest tenth) adjusted for bias, if bias adjustment factor required, as provided for in §75.24(d); and

(iv) Identification code for emissions formula used to derive hourly SO_2 mass emissions from SO_2 concentration and flow data in paragraphs (c)(1) and (c)(2) of this section as provided for in §75.53.

Table 4.--Codes for Method of Emissions and Flow Determination

[Amended]

Code	Hourly emissions/flow measurement or estimation method

Copyright 1993-1997, The Bureau of National Affairs, Inc.

1..... Certified primary emission/flow monitoring system.
2..... Certified back-up emission/flow monitoring system.
3..... Approved alternative monitoring system.
4..... Reference method:
SO_2: Method 6C.
Flow: Method 2.
NO_X: Method 7E.
CO_2 or O_2: Method 3A.
5..... For units with add-on SO_2 and/or NO_X emission controls: SO_2 concentration or NO_X emission rate estimate from Agency preapproved parametric monitoring method.
6..... Average of the hourly SO_2 concentrations, CO_2 concentrations, flow, or NO_X emission rate for the hour before and the hour following a missing data period.
7..... Hourly average SO_2 concentration, CO_2 concentration, flow rate, or NO_X emission rate using initial missing data procedures.
8..... 90th percentile hourly SO_2 concentration, flow rate, or NO_X emission rate.
9..... 95th percentile hourly SO_2 concentration, flow rate, or NO_X emission rate.
10..... Maximum hourly SO_2 concentration, flow rate, or NO_X emission rate.
11..... Hourly average flow rate or NO_X emission rate in corresponding load range.
12..... Maximum potential concentration of SO_2, maximum potential flow rate, or maximum potential NO_X emission rate, as determined using section 2.1 of appendix A of this part, or maximum CO_2 concentration.
13..... Other data (specify method).
14..... Minimum CO_2 concentration of 5.0 percent CO_2 or maximum O_2 concentration of 14.0 percent to be substituted optionally for measured diluent gas concentrations during unit startup, for NO_X emission rate or SO_2 emission rate in lb/mmBtu or for CO_2 concentration.
15..... Fuel analysis data from appendix G of this part for CO_2 mass emissions

(d) *NO_X emission record provisions.* The owner or operator shall record the information required by this paragraph for each affected unit for each hour, except for a gas-fired peaking unit or oil- fired peaking unit for which the owner or operator is using the optional protocol in appendix E to this part for estimating NO_X emission rate. For each NO_X emission rate as measured and reported from the certified primary monitor, certified back-up monitor, or other approved method of emissions determination:

Copyright 1993-1997, The Bureau of National Affairs, Inc.

(1) Component/system identification code as provided for in §75.53;

(2) Date and hour;

(3) Hourly average NO_X concentration (ppm, rounded to the nearest tenth);

(4) Hourly average diluent gas concentration (percent O_2 or percent CO_2, rounded to the nearest tenth);

(5) Hourly average NO_X emission rate (lb/mmBtu, rounded to nearest hundredth);

(6) Hourly average NO_X emission rate (lb/mmBtu, rounded to nearest hundredth) adjusted for bias, if bias adjustment factor is required as provided for in §75.24(d);

(7) Percent monitoring system data availability, (recorded to the nearest tenth of a percent), calculated pursuant to §75.32;

(8) Method of determination for hourly average NO_X emission rate using Codes 1-15 in Table 4; and

(9) Identification code for emissions formula used to derive hourly average NO_X emission rate, as provided for in §75.53.

(e) *CO2 emission record provisions.* The owner or operator shall record or calculate CO_2 emissions for each affected unit using one of the following methods specified in this section:

(1) If the owner or operator chooses to use a CO_2 continuous emission monitoring system (including an O_2 monitor and flow monitor as specified in appendix F of this part), then the owner or operator shall record for each hour the following information for CO_2 mass emissions, as measured and reported from the certified primary monitor, certified back-up monitor, or other approved method of emissions determination:

(i) Component/system identification code as provided for in §75.53;

(ii) Date and hour;

(iii) Hourly average CO_2 concentration (in percent, rounded to the nearest tenth);

(iv) Hourly average volumetric flow rate (scfh, rounded to the nearest thousand scfh);

(v) Hourly CO_2 mass emissions (tons/hr, rounded to the nearest tenth);

(vi) Percent monitor data availability (recorded to the nearest tenth of a percent); calculated pursuant to §75.32;

Copyright 1993-1997, The Bureau of National Affairs, Inc.

(vii) Method of determination for hourly CO_2 mass emissions using Codes 1-15 in Table 4; and

(viii) Identification code for emissions formula used to derive average hourly CO_2 mass emissions, as provided for in §75.53.

(2) As an alternative to §75.54(e)(1) , the owner or operator may use the procedures in §75.13 and in appendix G to this part, and shall record daily the following information for CO_2 mass emissions:

(i) Date;

(ii) Daily combustion-formed CO_2 mass emissions (tons/day, rounded to the nearest tenth);

(iii) For coal-fired units, flag indicating whether optional procedure to adjust combustion-formed CO_2 mass emissions for carbon retained in flyash has been used and, if so, the adjustment;

(iv) For a unit with a wet flue gas desulfurization system or other controls generating CO_2, daily sorbent-related CO_2 mass emissions (tons/day, rounded to the nearest tenth); and

(v) For a unit with a wet flue gas desulfurization system or other controls generating CO_2, total daily CO_2 mass emissions (tons/day, rounded to the nearest tenth) as sum of combustion-formed emissions and sorbent-related emissions.

(f) *Opacity records.* The owner or operator shall record opacity data as specified by the State or local air pollution control agency. If the State or local air pollution control agency does not specify recordkeeping requirements for opacity, then record the information required by paragraphs (f)(1) through (5) of this section for each affected unit, except as provided for in §75.14(b), (c), and (d) . The owner or operator shall also keep records of all incidents of opacity monitor downtime during unit operation, including reason(s) for the monitor outage(s) and any corrective action(s) taken for opacity, as measured and reported by the continuous opacity monitoring system:

(1) Component/system identification code;

(2) Date, hour, and minute;

(3) Average opacity of emissions for each six minute averaging period (in percent opacity);

(4) If the average opacity of emissions exceeds the applicable standard, then a code indicating such an exceedance has occurred; and

(5) Percent monitor data availability, recorded to the nearest tenth of a percent, calculated according to the requirements of the procedure recommended for State Implementation Plans in

Copyright 1993-1997, The Bureau of National Affairs, Inc.

appendix M of part 51 of this chapter.

40 CFR 75.55 General recordkeeping provisions for specific situations.

[§75.55 added at 60 FR 26513, May 17, 1995]

(a) *Specific SO_2 emission record provisions for units with qualifying Phase I technology.* In addition to the SO_2 emissions information required in §75.54(c), from January 1, 1997, through December 31, 1999, the owner or operator shall record the applicable information in this paragraph for each affected unit on which SO_2 emission controls have been installed and operated for the purpose of meeting qualifying Phase I technology requirements pursuant to §72.42 of this chapter and §75.15.

(1) For units with post-combustion emission controls:

(i) Component/system identification codes for each inlet and outlet SO_2-diluent continuous emission monitoring system;

(ii) Date and hour;

(iii) Hourly average inlet SO_2 emission rate (lb/mmBtu, rounded to nearest hundredth);

(iv) Hourly average outlet SO_2 emission rate (lb/mmBtu, rounded to nearest hundredth);

(v) Percent data availability for both inlet and outlet SO_2-diluent continuous emission monitoring systems (recorded to the nearest tenth of a percent), calculated pursuant to Equation 8 of §75.32 (for the first 8,760 unit operating hours following initial certification) and Equation 9 of §75.32, thereafter; and

(vi) Identification code for emissions formula used to derive hourly average inlet and outlet SO_2 mass emissions rates for each affected unit or group of units using a common stack.

(2) For units with combustion and/or pre-combustion emission controls:

(i) Component/system identification codes for each outlet SO_2-diluent continuous emission monitoring system;

(ii) Date and hour;

(iii) Hourly average outlet SO_2 emission rate (lb/mmBtu, rounded to nearest hundredth);

(iv) For units with combustion controls, average daily inlet SO_2 emission rate (lb/mmBtu, rounded to nearest hundredth), determined by coal sampling and analysis procedures in §75.15; and

Copyright 1993-1997, The Bureau of National Affairs, Inc.

(v) For units with pre-combustion controls (i.e., fuel pretreatment), fuel analysis demonstrating the weight, sulfur content, and gross calorific value of the product and raw fuel lots.

(b) *Specific parametric data record provisions for calculating substitute emissions data for units with add-on emission controls.* In accordance with §75.34, the owner or operator of an affected unit with add-on emission controls shall either record the applicable information in paragraph (b)(3) of this section for each hour of missing SO_2 concentration data or NO_X emission rate (in addition to other information), or shall record the information in paragraph (b)(1) of this section for SO_2 or paragraph (b)(2) of this section for NO_X through an automated data acquisition and handling system, as appropriate to the type of add-on emission controls:

(1) For units with add-on SO_2 emission controls petitioning to use or using the optional parametric monitoring procedures in appendix C of this part , for each hour of missing SO_2 concentration or volumetric flow data:

(i) The information required in §75.54(b) for SO_2 concentration and volumetric flow if either one of these monitors is still operating;

(ii) Date and hour;

(iii) Number of operating scrubber modules;

(iv) Total feedrate of slurry to each operating scrubber module (gal/min);

(v) Pressure differential across each operating scrubber module (inches of water column);

(vi) For a unit with a wet flue gas desulfurization system, an inline measure of absorber pH for each operating scrubber module;

(vii) For a unit with a dry flue gas desulfurization system, the inlet and outlet temperatures across each operating scrubber module;

(viii) For a unit with a wet flue gas desulfurization system, the percent solids in slurry for each scrubber module.

(ix) For a unit with a dry flue gas desulfurization system, the slurry feed rate (gal/min) to the atomizer nozzle;

(x) For a unit with SO_2 add-on emission controls other than wet or dry limestone, corresponding parameters approved by the Administrator;

(xi) Method of determination of SO_2 concentration and volumetric flow, using Codes 1-15 in Table 3 of §75.54; and

(xii) Inlet and outlet SO_2 concentration values recorded by an SO_2 continuous emission

Copyright 1993-1997, The Bureau of National Affairs, Inc.

monitoring system and the removal efficiency of the add-on emission controls.

(2) For units with add-on NO_X emission controls petitioning to use or using the optional parametric monitoring procedures in appendix C of this part , for each hour of missing NO_X emission rate data:

(i) Date and hour;

(ii) Inlet air flow rate (acfh, rounded to the nearest thousand);

(iii) Excess O_2 concentration of flue gas at stack outlet (percent, rounded to nearest tenth of a percent);

(iv) Carbon monoxide concentration of flue gas at stack outlet (ppm, rounded to the nearest tenth);

(v) Temperature of flue gas at furnace exit or economizer outlet duct (°F); and

(vi) Other parameters specific to NO_X emission controls (e.g., average hourly reagent feedrate);

(vii) Method of determination of NO_X emission rate using Codes 1-15 in Table 3 of §75.54; and

(viii) Inlet and outlet NO_X emission rate values recorded by a NO_X continuous emission monitoring system and the removal efficiency of the add-on emission controls.

(3) For units with add-on SO_2 or NO_X emission controls following the provisions of §§75.34(a)(1) or (a)(2), the owner or operator shall, for each hour of missing SO_2 or NO_X emission data, record:

[§75.55(b)(3) introductory text amended at 61 FR 59161, Nov. 20, 1996]

(i) Parametric data which demonstrate the proper operation of the add-on emission controls, as described in the quality assurance/quality control program for the unit. The parametric data shall be maintained on site, and shall be submitted upon request to the Administrator, an EPA Regional office, State, or local agency;

[§75.55(b)(3)(i) amended at 61 FR 59161, Nov. 20, 1996]

(ii) A flag indicating either that the add-on emission controls are operating properly, as evidenced by all parameters being within the ranges specified in the quality assurance/quality control program, or that the add-on emission controls are not operating properly;

[§75.55(b)(3)(ii) amended at 61 FR 59161, Nov. 20, 1996]

Copyright 1993-1997, The Bureau of National Affairs, Inc.

(iii) For units petitioning under §75.66 for substituting a representative SO_2 concentration during missing data periods, any available inlet and outlet SO_2 concentration values recorded by an SO_2 continuous emission monitoring system; and

(iv) For units petitioning under §75.66 for substituting a representative NO_X emission rate during missing data periods, any available inlet and outlet NO_X emission rate values recorded by a NO_X continuous emission monitoring system.

[§75.55(b) added at 60 FR 26566, May 17, 1995]

(c) *Specific SO_2 emission record provisions for gas-fired or oil-fired units using optional protocol in appendix D of this part.* In lieu of recording the information in §75.54(c) of this section, the owner or operator shall record the applicable information in this paragraph for each affected gas-fired or oil-fired unit for which the owner or operator is using the optional protocol in appendix D of this part for estimating SO_2 mass emissions.

(1) For each hour when the unit is combusting oil:

(i) Date and hour;

(ii) Hourly average flow rate of oil with the units in which oil flow is recorded, (gal/hr, lb/hr, m^3/hr, or bbl/hr, rounded to the nearest tenth) (flag value if derived from missing data procedures);

(iii) Sulfur content of oil sample used to determine SO_2 mass emissions, rounded to nearest hundredth for diesel fuel or to the nearest tenth of a percent for other fuel oil (flag value if derived from missing data procedures);

(iv) Method of oil sampling (flow proportional, continuous drip, as delivered or manual);

(v) Mass of oil combusted each hour (lb/hr, rounded to the nearest tenth);

(vi) SO_2 mass emissions from oil (lb/hr, rounded to the nearest tenth);

(vii) For units using volumetric oil flowmeters, density of oil (flag value if derived from missing data procedures);

(viii) Gross calorific value (heat content) of oil, used to determine heat input (Btu/mass unit) (flag value if derived from missing data procedures);

(ix) Hourly heat input rate from oil according to procedures in appendix F of this part (mmBtu/hr, to the nearest tenth); and

(x) Fuel usage time for combustion of oil during the hour, rounded up to the nearest 15 min.

Copyright 1993-1997, The Bureau of National Affairs, Inc.

(2) For gas-fired units or oil-fired units using the optional protocol in appendix D of this part of daily manual oil sampling, when the unit is combusting oil, the highest sulfur content recorded from the most recent 30 daily oil samples rounded to nearest tenth of a percent.

(3) For each hour when the unit is combusting gaseous fuel,

(i) Date and hour;

(ii) Hourly heat input rate from gaseous fuel according to procedures in appendix F to this part (mmBtu/hr, rounded to the nearest tenth);

(iii) Sulfur content or SO_2 emission rate, in one of the following formats, in accordance with the appropriate procedure from appendix D of this part:

(A) Sulfur content of gas sample, (rounded to the nearest 0.1 grains/100 scf) (flag value if derived from missing data procedures); or

(B) SO_2 emission rate of 0.0006 lb/mmBtu for pipeline natural gas;

(iv) Hourly flow rate of gaseous fuel, in 100 scfh (flag value if derived from missing data procedures);

(v) Gross calorific value (heat content) of gaseous fuel, used to determine heat input (Btu/scf) (flag value if derived from missing data procedures);

(vi) Heat input rate from gaseous fuel (mmBtu/hr, rounded to the nearest tenth);

(vii) SO_2 mass emissions due to the combustion of gaseous fuels, lb/hr; and

(viii) Fuel usage time for combustion of gaseous fuel during the hour, rounded up to the nearest 15 min.

(4) For each oil sample or sample of diesel fuel:

(i) Date of sampling;

(ii) Sulfur content (percent, rounded to the nearest hundredth for diesel fuel and to the nearest tenth for other fuel oil) (flag value if derived from missing data procedures);

(iii) Gross calorific value or heat content (Btu/lb) (flag value if derived from missing data procedures); and

(iv) Density or specific gravity, if required to convert volume to mass (flag value if derived from missing data procedures).

(5) For each daily sample of gaseous fuel:

Copyright 1993-1997, The Bureau of National Affairs, Inc.

(i) Date of sampling;

(ii) Sulfur content (grains/100 scf, rounded to the nearest tenth) (flag value if derived from missing data procedures);

(6) For each monthly sample of gaseous fuel:

(i) Date of sampling;

(ii) Gross calorific value or heat content (Btu/scf) (flag value if derived from missing data procedures).

(d) *Specific NO_X emission record provisions for gas-fired peaking units or oil- fired peaking units using optional protocol in appendix E of this part.* In lieu of recording the information in paragraph §75.54(d), the owner or operator shall record the applicable information in this paragraph for each affected gas-fired peaking unit or oil-fired peaking unit for which the owner or operator is using the optional protocol in appendix E of this part for estimating NO_X emission rate.

(1) For each hour when the unit is combusting oil,

(i) Date and hour;

(ii) Hourly average fuel flow rate of oil with the units in which oil flow is recorded (gal/hour, lb/hr or bbl/hour) (flag value if derived from missing data procedures);

(iii) Gross calorific value (heat content) of oil, used to determine heat input (Btu/lb) (flag value if derived from missing data procedures);

(iv) Hourly average NO_X emission rate from combustion of oil (lb/mmBtu);

(v) Heat input rate of oil (mmBtu/hr, rounded to the nearest tenth); and

(vi) Fuel usage time for combustion of oil during the hour, rounded to the nearest 15 min.

(2) For each hour when the unit is combusting gaseous fuel,

(i) Date and hour;

(ii) Hourly average fuel flow rate of gaseous fuel (100 scfh) (flag value if derived from missing data procedures);

(iii) Gross calorific value (heat content) of gaseous fuel, used to determine heat input (Btu/scf) (flag value if derived from missing data procedures);

(iv) Hourly average NO_X emission rate from combustion of gaseous fuel (lb/mmBtu, rounded

Copyright 1993-1997, The Bureau of National Affairs, Inc.

to nearest hundredth);

(v) Heat input rate from gaseous fuel (mmBtu/hr, rounded to the nearest tenth); and

(vi) Fuel usage time for combustion of gaseous fuel during the hour, rounded to the nearest 15 min.

(3) For each hour when the unit combusts any fuel:

(i) Date and hour;

(ii) Total heat input from all fuels (mmBtu, rounded to the nearest tenth);

(iii) Hourly average NO_X emission rate for the unit for all fuels;

(iv) For stationary gas turbines and diesel or dual-fuel reciprocating engines, hourly averages of operating parameters under section 2.3 of appendix E (flag if value is outside of manufacturer's recommended range);

(v) For boilers, hourly average boiler O_2 reading (percent, rounded to the nearest tenth) (flag if value exceeds by more than 2 percentage points the O_2 level recorded at the same heat input during the previous NO_X emission rate test).

(4) For each fuel sample:

(i) Date of sampling;

(ii) Gross calorific value (heat content) (Btu/lb for oil, Btu/scf for gaseous fuel); and

(iii) Density or specific gravity, if required to convert volume to mass.

(e) *Specific SO_2* emission record provisions during the combustion of gaseous fuel.

(1) If SO_2 emissions are determined in accordance with the provisions in §75.11(e)(2) during hours in which only natural gas (or gaseous fuel with a sulfur content no greater than natural gas) is combusted in a unit with an SO_2 continuous emission monitoring system, the owner or operator shall record the information in paragraph (c)(3) of this section in lieu of the information in §§75.54(c)(1) and (c)(3), for those hours.

(2) The provisions of this paragraph apply to a unit which, in accordance with the provisions of §75.11(e)(3) uses an SO_2 continuous emission monitoring system to determine SO_2 emissions during hours in which only natural gas or gaseous fuel with a sulfur content no greater than natural gas is combusted in the unit. If the unit sometimes burns only natural gas (or gaseous fuel with a sulfur content no greater than natural gas) as a primary and/or backup fuel, and at other times combusts higher-sulfur fuels such as coal or oil as primary and/or backup fuel(s), then the owner or operator shall keep records on-site, suitable for inspection, of the type(s) of fuel(s)

Copyright 1993-1997, The Bureau of National Affairs, Inc.

burned during each period of missing SO_2 data, and the number of hours that each type of fuel was combusted in the unit during each missing data period. This recordkeeping requirement does not apply to an affected unit that burns natural gas (or gaseous fuel with a sulfur content no greater than natural gas) exclusively, nor does it apply to a unit that burns such gaseous fuel(s) only during unit startup.

[§75.55(e) added at 60 FR 26566, May 17, 1995; revised at 61 FR 59161, Nov. 20, 1996]

(f) The owner or operator shall meet the requirements of this section on or after January 1, 1996.

40 CFR 75.56 Certification, quality assurance and quality control record provisions.

[§75.56 added at 60 FR 26513, May 17, 1995]

(a) *Continuous emission or opacity monitoring systems.* The owner or operator shall record the applicable information in this section for each certified monitor or certified monitoring system (including certified backup monitors) measuring and recording emissions or flow from an affected unit.

(1) For each SO_2 or NO_X pollutant concentration monitor, flow monitor, CO_2 monitor, or diluent gas monitor, the owner or operator shall record the following for all daily and 7-day calibration error tests, including any follow-up tests after corrective action:

(i) Component/system identification code;

(ii) Instrument span;

(iii) Date and hour;

(iv) Reference value, (i.e., calibration gas concentration or reference signal value, in ppm or other appropriate units);

(v) Observed value (monitor response during calibration, in ppm or other appropriate units);

(vi) Percent calibration error (rounded to nearest tenth of a percent); and

(vii) For 7-day calibration tests for certification or recertification, a certification from the cylinder gas vendor or CEMS vendor, that calibration gas as defined in §72.2 and appendix A of this part , were used to conduct calibration error testing; and

(viii) Description of any adjustments, corrective actions, or maintenance following test.

(2) For each flow monitor, the owner or operator shall record the following for all daily interference checks, including any follow-up tests after corrective action:

Copyright 1993-1997, The Bureau of National Affairs, Inc.

(i) Code indicating whether monitor passes or fails the interference check; and

(ii) Description of any adjustments, corrective actions, or maintenance following test.

(3) For each SO_2 or NO_X pollutant concentration monitor, CO_2 monitor, or diluent gas monitor, the owner or operator shall record the following for the initial and all subsequent linearity check(s), including any follow-up tests after corrective action:

(i) Component/system identification code;

(ii) Instrument span;

(iii) Date and hour;

(iv) Reference value (i.e., reference gas concentration, in ppm or other appropriate units);

(v) Observed value (average monitor response at each reference gas concentration, in ppm or other appropriate units);

(vi) Percent error at each of three reference gas concentrations (rounded to nearest tenth of a percent); and

(vii) Description of any adjustments, corrective action, or maintenance following test.

(4) For each flow monitor, where applicable, the owner or operator shall record the following for all quarterly leak checks, including any follow-up tests after corrective action:

(i) Code indicating whether monitor passes or fails the quarterly leak check; and

(ii) Description of any adjustments, corrective actions, or maintenance following test.

(5) For each SO_2 pollutant concentration monitor, flow monitor, CO_2 pollutant concentration monitor; NO_X continuous emission monitoring system, SO_2-diluent continuous emission monitoring system, and approved alternative monitoring system, the owner or operator shall record the following information for the initial and all subsequent relative accuracy tests and test audits:

(i) Date and hour;

(ii) Reference method(s) used;

(iii) Individual test run data from the relative accuracy test audit for the SO_2 concentration monitor, flow monitor, CO_2 pollutant concentration monitor, NO_X continuous emission monitoring system, SO_2-diluent continuous emission monitoring system, or approved alternative monitoring systems, including:

Copyright 1993-1997, The Bureau of National Affairs, Inc.

(A) Date, hour, and minute of beginning of test run,

(B) Date, hour, and minute of end of test run,

(C) Component/system identification code,

(D) Run number,

(E) Run data for monitor;

(F) Run data for reference method; and

(G) Flag value (0 or 1) indicating whether run has been used in calculating relative accuracy and bias values.

(iv) Calculations and tabulated results, as follows:

(A) Arithmetic mean of the monitoring system measurement values, reference method values, and of their differences, as specified in Equation A-7 in appendix A to this part.

(B) Standard deviation, as specified in Equation A-8 in appendix A to this part .

(C) Confidence coefficient, as specified in Equation A-9 in appendix A to this part.

(D) Relative accuracy test results, as specified in Equation A-10 in appendix A to this part. (For the 3-level flow monitor test only, relative accuracy test results should be recorded at each of three gas velocities. Each of these three gas velocities shall be expressed as a total gross unit load, rounded to the nearest MWe or as steam load, rounded to the nearest thousand lb/hr.)

(E) Bias test results as specified in section 7.6.4 in appendix A to this part.

(F) Bias adjustment factor from Equations A-11 and A-12 in appendix A to this part for any monitoring system or component that failed the bias test and 1.0 for any monitoring system or component that passed the bias test. (For flow monitors only, bias adjustment factors should be recorded at each of three gas velocities).

(v) Description of any adjustment, corrective action, or maintenance following test.

(vi) F-factor value(s) used to convert NO_X pollutant concentration and diluent gas (O_2 or CO_2) concentration measurements into NO_X emission rates (in lb/mmBtu), heat input or CO_2 emissions.

(6) For each SO_2, NO_X, CO_2, or O_2 pollutant concentration monitor, NOx-diluent continuous emission monitoring system, or SO_2-diluent continuous emission monitoring system, the owner or operator shall record the following information for the cycle time test:

Copyright 1993-1997, The Bureau of National Affairs, Inc.

(i) Component/system identification code;

(ii) Date;

(iii) Start and end times;

(iv) Upscale and downscale cycle times for each component;

(v) Stable start monitor value;

(vi) Stable end monitor value;

(vii) Reference value of calibration gas(es);

(viii) Calibration gas level; and

(ix) Cycle time result for the entire system.

[§75.56(a)(6) added at 60 FR 26566, May 17, 1995]

(7) Results of all trial runs and certification tests and quality assurance activities and measurements (including all reference method field test sheets, charts, records of combined system responses, laboratory analyses, and example calculations) necessary to substantiate compliance with all relevant appendices in this part. This information shall include, but shall not be limited to, the following reference method data:

(i) For each run of each test using Method 2 in appendix A of part 60of this chapter to determine volumetric flow rate:

(A) Pitot tube coefficient;

(B) Date of pitot tube calibration;

(C) Average square root of velocity head of stack gas (inches of water) for the run;

(D) Average absolute stack gas temperature, °R;

(E) Barometric pressure at test port, inches of mercury;

(F) Stack static pressure, inches of H_2O;

(G) Absolute stack gas pressure, inches of mercury;

(H) Moisture content of stack gas, percent;

(I) Molecular weight of stack gas, wet basis (lb/lb-mole);

(J) Number of reference method measurements during the run; and

Copyright 1993-1997, The Bureau of National Affairs, Inc.

(K) Total volumetric flowrate (scfh, wet basis).

(ii) For each test using Method 2 in appendix A of part 60 of this chapter to determine volumetric flow rate:

(A) Information indicating whether or not the location meets requirements of Method 1 in appendix A of part 60 of this chapter;

(B) Information indicating whether or not the equipment passed the leak check after every run included in the relative accuracy test;

(C) Stack inside diameter at test port (ft);

(D) Duct side height and width at test port (ft);

(E) Stack or duct cross-sectional area at test port (ft^2); and

(F) Designation as to the load level of the test.

(iii) For each run of each test using Method 6C 7E, or 3A in appendix A of part 60 of this chapter to determine SO_2, NO_X, CO_2, or O_2 concentration:

(A) Run start date;

(B) Run start time;

(C) Run end date;

(D) Run end time;

(E) Span of reference method analyzer;

(F) Reference gas concentration (low, mid-, and high gas levels);

(G) Initial and final analyzer calibration response (low, mid- and high gas levels);

(H) Analyzer calibration error (low, mid-, and high gas levels);

(I) Pre-test and post-test analyzer bias (zero and upscale gas levels);

(J) Calibration drift and zero drift of analyzer;

(K) Indication as to which data are from a pretest and which are from a posttest;

(L) Calibration gas level (zero, mid- level, or high); and

(M) Moisture content of stack gas, in percent, if needed to convert to moisture basis of CEMS being tested.

Copyright 1993-1997, The Bureau of National Affairs, Inc.

(iv) For each test using Method 6C , 7E, or 3A in appendix A of part 60 of this chapter to determine SO_2, NO_X CO_2 , or O_2 concentration:

(A) Pollutant being measured;

(B) Test number;

(C) Date of interference test;

(D) Results of interference test;

(E) Date of NO_2 to NO conversion test (Method 7E only);

(F) Results of NO_2 to NO conversion test (Method 7E only).

(v) For each calibration gas cylinder used to test using Method 6C, 7E, or 3A in appendix A of part 60 of this chapter to determine SO_2, NO_X, CO_2, or O_2 concentration:

(A) Cylinder gas vendor name from certification;

(B) Cylinder number;

(C) Cylinder expiration date;

(D) Pollutant(s) in cylinder; and

(E) Cylinder gas concentration(s).

(b) *Excepted monitoring systems for gas-fired and oil-fired units.* The owner or operator shall record the applicable information in this section for each excepted monitoring system following the requirements of appendix D of this part or appendix E of this part for determining and recording emissions from an affected unit.

(1) For each oil-fired unit or gas-fired unit using the optional procedures of appendix D of this part for determining SO_2 mass emissions and heat input or the optional procedures of appendix E of this part for determining NO_X emission rate, for certification and quality assurance testing of fuel flowmeters:

(i) Date of test,

(ii) Upper range value of the fuel flowmeter,

(iii) Flowmeter measurements during accuracy test,

(iv) Reference flow rates during accuracy test,

(v) Average flowmeter accuracy as a percent of upper range value,

Copyright 1993-1997, The Bureau of National Affairs, Inc.

(vi) Fuel flow rate level (low, mid-level, or high); and

(vi) Description of fuel flowmeter calibration specification or procedure (in the certification application, or periodically if a different method is used for annual quality assurance testing).

(2) For gas-fired peaking units or oil- fired peaking units using the optional procedures of appendix E of this part, for each initial performance, periodic, or quality assurance/quality control-related test:

(i) For each run of emissions data;

(A) Run start date and time;

(B) Run end date and time;

(C) Fuel flow (lb/hr, gal/hr, scf/hr, bbl/hr, or m^3/hr);

(D) Gross calorific value (heat content) of fuel (Btu/lb or Btu/scf);

(E) Density of fuel (if needed to convert mass to volume);

(F) Total heat input during the run (mmBtu);

(G) Hourly heat input rate for run (mmBtu/hr);

(H) Response time of the O_2 and NO_X reference method analyzers;

(I) NO_X concentration (ppm);

(J) O_2 concentration (percent O_2);

(K) NO_X emission rate (lb/mmBtu); and

(L) Fuel or fuel combination (by heat input fraction) combusted.

(ii) For each unit load and heat input;

(A) Average NO_X emission rate (lb/mmBtu);

(B) F-factor used in calculations;

(C) Average heat input rate (mmBtu/hr);

(D) Unit operating parametric data related to NO_X formation for that unit type (e.g., excess O_2 level, water/fuel ratio); and

(E) Fuel or fuel combination (by heat input fraction) combusted.

Copyright 1993-1997, The Bureau of National Affairs, Inc.

(iii) For each test report;

(A) Graph of NO_X emission rate against heat input rate;

(B) Results of the tests for verification of the accuracy of emissions calculations and missing data procedures performed by the automated data acquisition and handling system, and the calculations used to produce NO_X emission rate data at different heat input conditions; and

(C) Results of all certification tests and quality assurance activities and measurements (including reference method field test sheets, charts, laboratory analyses, example calculations, or other data as appropriate), necessary to substantiate compliance with the requirements of appendix E of this part.

(c) For units with add-on SO_2 and NO_X emission controls following the provisions of §§75.34(a)(1)or (a)(2), the owner or operator shall keep the following records on-site in the quality assurance/quality control plan required by section 1 in appendix B of this part:

(1) A list of operating parameters for the add-on emission controls, including parameters in §75.55(b), appropriate to the particular installation of add-on emission controls; and

(2) The range of each operating parameter in the list that indicates the add- on emission controls are properly operating.

[§75.56(c) revised at 61 FR 59161, Nov. 20, 1996]

(d) The owner or operator shall meet the requirements of paragraphs (a) and (b) of this section on and after January 1, 1996. The owner or operator shall meet the requirements of paragraph (c) of this section on and after January 1, 1998.

[§75.56(d) added at 61 FR 59161, Nov. 20, 1996]

Subpart G—Reporting Requirements

40 CFR 75.60 General provisions.

(a) The designated representative for any affected unit subject to the requirements of this part shall comply with all reporting requirements in this section and with the signatory requirements of §72.21 of this chapter for all submissions.

(b) Submissions. The designated representative shall submit all reports and petitions (except as provided in §75.61) as follows:

[§75.60(b)(1) and (2) amended at 60 FR 26513, May 17, 1995]

(1) All initial certification or recertification testing notifications, initial certification or

Copyright 1993-1997, The Bureau of National Affairs, Inc.

recertification applications, monitoring plans, petitions for alternative monitoring systems, notifications, electronic quarterly reports, and other communications required by this subpart shall be submitted to the Administrator.

(2) Copies of initial certification or recertification testing notifications, certification or recertification applications and monitoring plans shall be submitted to the appropriate Regional office of the U.S. Environmental Protection Agency and appropriate State or local air pollution control agency.

(c) *Confidentiality of data.* The following provisions shall govern the confidentiality of information submitted under this part.

(1) All emission data reported in quarterly reports under §75.64 shall remain public information.

(2) For information submitted under this part other than emission data submitted in quarterly reports, the designated representative must assert a claim of confidentiality at the time of submission for any information he or she wishes to have treated as confidential business information (CBI) under subpart B of part 2 of this chapter. Failure to assert a claim of confidentiality at the time of submission may result in disclosure of the information by EPA without further notice to the designated representative.

(3) Any claim of confidentiality for information submitted in quarterly reports under §75.64 must include substantiation of the claim. Failure to provide substantiation may result in disclosure of the information by EPA without further notice.

(4) As provided under subpart B of part 2 of this chapter, EPA may review information submitted to determine whether it is entitled to confidential treatment even when confidentiality claims are initially received. The EPA will contact the designated representative as part of such a review process.

[§75.60(c) added at 60 FR 26513, May 17, 1995]

40 CFR 75.61 Notifications.

[§75.61 and heading revised at 60 FR 26513, May 17, 1995]

(a) *Submission.* The designated representative for an affected unit (or owner or operator, as specified) shall submit notice to the Administrator, to the appropriate EPA Regional Office, and to the applicable State air pollution control agency for the following purposes, as required by this part.

(1) *Initial certification and recertification test notifications.* The owner or operator or designated representative for an affected unit shall submit written notification of initial certification tests, recertification tests, and revised test dates as specified in §75.20 for continuous

Copyright 1993-1997, The Bureau of National Affairs, Inc.

emission monitoring systems, for alternative monitoring systems under subpart E of this part, or for excepted monitoring systems under appendix E of this part, except as provided in paragraph (a)(4) of this section and except for testing only of the data acquisition and handling system.

(i) *Notification of initial certification testing.* Initial certification test notifications shall be submitted not later than 45 days prior to the first scheduled day of initial certification testing. Testing may be performed on a date other than that already provided in a notice under this subparagraph as long as notice of the new date is provided either in writing or by telephone or other means at least 7 days prior to the original scheduled test date or the revised test date, whichever is earlier.

(ii) *Notification of certification retesting and recertification testing.* For retesting following a loss of certification under §75.20(a)(5) or for recertification under §75.20(b), notice of testing shall be submitted either in writing or by telephone at least 7 days prior to the first scheduled day of testing; except that in emergency situations when testing is required following an uncontrollable failure of equipment that results in lost data, notice shall be sufficient if provided within 2 business days following the date when testing is scheduled. Testing may be performed on a date other than that already provided in a notice under this subparagraph as long as notice of the new date is provided by telephone or other means at least 2 business days prior to the original scheduled test date or the revised test date, whichever is earlier.

(iii) *Repeat of testing without notice.* Notwithstanding the above notice requirements, the owner or operator may elect to repeat a certification test immediately, without advance notification, whenever the owner or operator has determined during the certification testing that a test was failed or that a second test is necessary in order to attain a reduced relative accuracy test frequency.

(2) *New unit, newly affected unit, new stack, or new flue gas desulfurization system operation notification.* The designated representative for an affected unit shall submit written notification: For a new unit or a newly affected unit, of the planned date when a new unit or newly affected unit will commence commercial operation or, for new stack or flue gas desulfurization system, of the planned date when a new stack or flue gas desulfurization system will be completed and emissions will first exit to the atmosphere.

(i) Notification of the planned date shall be submitted not later than 45 days prior to the date the unit commences commercial operation, or not later than 45 days prior to the date when a new stack or flue gas desulfurization system exhausts emissions to the atmosphere.

(ii) If the date when the unit commences commercial operation or the date when the new stack or flue gas desulfurization system exhausts emissions to the atmosphere, whichever is applicable, changes from the planned date, a notification of the actual date shall be submitted not later than 7 days following: The date the unit commences commercial operation or, the date when a new stack or flue gas desulfurization system exhausts emissions to the atmosphere.

Copyright 1993-1997, The Bureau of National Affairs, Inc.

(3) *Unit shutdown and recommencement of commercial operation.* The designated representative for an affected unit that will be shutdown on the relevant compliance date in §75.4(a) and that is relying on the provisions in §75.4(d) to postpone certification testing shall submit notification of unit shutdown and recommencement of commercial operation as follows:

(i) For planned unit shutdowns, written notification of the planned shutdown date and planned date of recommencement of commercial operation shall be submitted 45 calendar days prior to the deadline in §75.4(a). For unit shutdowns that are not planned 45 days prior to the deadline in §75.4(a), written notification of the planned shutdown date and planned date of recommencement of commercial operation shall be submitted no later than 7 days after the date the owner or operator is able to schedule the shutdown date and date of recommencement of commercial operation. If the actual shutdown date or the actual date of recommencement of commercial operation differs from the planned date, written notice of the actual date shall be submitted no later than 7 days following the actual date of shutdown or of recommencement of commercial operation, as applicable;

(ii) For unplanned unit shutdowns, written notification of actual shutdown date and the expected date of recommencement of commercial operation shall be submitted no later than 7 days after the shutdown. If the actual date of recommencement of commercial operation differs from the expected date, written notice of the actual date shall be submitted no later than 7 days following the actual date of recommencement of commercial operation.

(4) *Use of backup fuels for appendix E procedures.* The designated representative for an affected oil-fired or gas-fired peaking unit that is using an excepted monitoring system under appendix E of this part and that is relying on the provisions in §75.4(f) to postpone testing of a fuel shall submit written notification of that fact no later than 45 days prior to the deadline in §75.4(a). The designated representative shall also submit a notification that such a fuel has been combusted no later than 7 days after the first date of combustion of any fuel for which testing has not been performed under appendix E after the deadline in §75.4(a). Such notice shall also include notice that testing under Appendix E either was performed during the initial combustion or notice of the date that testing will be performed.

(5) *Periodic relative accuracy test audits.* The owner or operator or designated representative of an affected unit shall submit written notice of the date of periodic relative accuracy testing performed under appendix B of this part no later than 21 days prior to the first scheduled day of testing. Testing may be performed on a date other than that already provided in a notice under this subparagraph as long as notice of the new date is provided either in writing or by telephone or other means acceptable to the respective State agency or office of EPA, and the notice is provided as soon as practicable after the new testing date is known, but no later than twenty-four (24) hours in advance of the new date of testing.

(i) Written notification under paragraph (a) (5) of this section may be provided either by mail or by facsimile. In addition, written notification may be provided by electronic mail, provided that

Copyright 1993-1997, The Bureau of National Affairs, Inc.

the respective State agency or office of EPA agrees that this is an acceptable form of notification.

(ii) Notwithstanding the notice requirements under paragraph (a)(5) of this section, the owner or operator may elect to repeat a periodic relative accuracy test immediately, without additional notification whenever the owner or operator has determined that a test was failed, or that a second test is necessary in order to attain a reduced relative accuracy test frequency.

(iii) *Waiver from notification requirements.* The Administrator, the appropriate EPA Regional Office, or the applicable State air pollution control agency may issue a waiver from the requirement of paragraph (a)(5) of this section to provide notice to the respective State agency or office of EPA for a unit or a group of units for one or more tests. The Administrator, the appropriate EPA Regional Office, or the applicable State air pollution control agency may also discontinue the waiver and reinstate the requirement of paragraph (a)(5) of this section to provide notice to the respective State agency or office of EPA for future tests for a unit or a group of units. In addition, if an observer from a State agency or EPA is present when a test is rescheduled, the observer may waive all notification requirements under paragraph (a)(5) of this sectionfor the rescheduled test.

[§75.61(a)(5) removed and reserved at 61 FR 25582, May 22, 1996; added at 61 FR 59162, Nov. 20, 1996]

(6) *Notice of combustion of emergency fuel under appendix D or E.* The designated representative of an oil-fired unit or gas-fired unit using appendix D or E of this part shall provide notice of the combustion of emergency fuel according to the following:

(i) For an affected oil-fired or gas-fired unit that is using an excepted monitoring system under appendix D or E of this part, where the owner or operator is postponing installation or testing of a fuel flowmeter for emergency fuel under §75.4(g), the designated representative shall submit written notification of postponement of installation or testing no later than 45 days prior to the deadline in §75.4(a). The designated representative shall also submit a notification that emergency fuel has been combusted no later than 7 days after the first date of combustion of the emergency fuel after the deadline in §75.4(a).

(ii) The designated representative of a unit that has received approval of a petition under §75.66 for exemption from one or more of the requirements of appendix E of this part for certification of an excepted monitoring system under appendix E of this part for a unit combusting emergency fuel shall submit written notice of each period of combustion of the emergency fuel with the next quarterly report submitted under §75.64 for each calendar quarter in which emergency fuel is combusted, including notice specifying the exact dates and hours during which the emergency fuel was combusted.

(b) The owner or operator or designated representative shall submit notification of certification tests and recertification tests for continuous opacity monitoring systems, as specified in §75.20(c)(6) to the State or local air pollution control agency.

Copyright 1993-1997, The Bureau of National Affairs, Inc.

(c) If the Administrator determines that notification substantially similar to that required in this section is required by any other State or local agency, the owner or operator or designated representative may send the Administrator a copy of that notification to satisfy the requirements of this section, provided the ORISPL unit identification number(s) is denoted.

40 CFR 75.62 Monitoring plan.

(a) *Submission.* The designated representative for an affected unit shall submit the monitoring plan to the Administrator no later than 45 days prior to the first scheduled certification test, other than testing of a fuel flowmeter or an excepted monitoring system under appendix D of this part. The designated representative shall submit the monitoring plan for a Phase II unit using an excepted monitoring system under appendix D of this part to the Administrator no later than November 15, 1994.

[§75.62(a) revised at 60 FR 26513, May 17, 1995]

(b) *Contents.* Monitoring plans shall contain the information specified in §75.53 of this part.

(c) *Format.* Each monitoring plan shall be submitted in a format specified by the Administrator, including information in electronic format and on paper.

[§75.62(c) added at 60 FR 26513, May 17, 1995]

40 CFR 75.63 Initial certification or recertification application.

[§75.63 and heading revised at 60 FR 26513, May 17, 1995]

(a) *Submission.* The designated representative for an affected unit or a combustion source seeking to enter the Opt-in Program in accordance with part 74 of this chapter shall submit the application to the Administrator within 45 days after completing all initial certification tests or recertification tests.

[§75.63(a) amended at 60 FR 71111, April 4, 1995]

(b) *Contents.* Each application for initial certification or recertification shall contain the following information:

(1) A copy of the monitoring plan (or any modifications to the monitoring plan) for the unit, or units, or combustion sources seeking to enter the Opt-in Program in accordance with part 74 of this chapter, if not previously submitted.

[§75.63(b)(1) amended at 60 FR 71111, April 4, 1995]

(2) The results of the test(s) required by §75.20, including the type of test conducted, testing date, and field data sheets required by §75.52 (or §75.56, no later than January 1, 1996), and including the results of any failed tests that had been repeated pursuant to the requirements in

Copyright 1993-1997, The Bureau of National Affairs, Inc.

§75.20.

(3) Results of the tests for verification of the accuracy of emissions and volumetric flow calculations performed by the automated data acquisition and handling system, including a summary of equations used to convert component data to units of the standard and to calculate substitute data for missing data periods, including sample calculations.

(c) *Format.* Each certification application shall be submitted in a format to be specified by the Administrator, including test results in electronic format and field data sheets required by §75.52 (or §75.56, no later than January 1, 1996) on paper where the information required under §75.56(a)(7) shall be submitted on paper.

40 CFR 75.64 Quarterly reports.

(a) *Electronic submission.* The designated representative for an affected unit shall electronically report the data and information in paragraphs (a), (b), and (c) of this section to the Administrator quarterly, beginning with the data from the later of: the last (partial) calendar quarter of 1993 (where the calendar quarter data begins at November 15, 1993); or the calendar quarter corresponding to the relevant deadline for certification in §75.4(a), (b), or (c). For any provisionally-certified monitoring system, some or all of the quarterly data may be invalidated, if the Administrator subsequently issues a notice of disapproval within 120 days of receipt of the complete initial certification application or within 60 days of receipt of the complete recertification application for the monitoring system. Each electronic report must be submitted to the Administrator within 30 days following the end of each calendar quarter and shall include for each affected unit (or group of units using a common stack):

[§75.64(a) introductory text amended at 60 FR 26513, May 17, 1995]

(1) The information and hourly data required in §§75.50 through 75.52 (or §§75.54 through 75.56), no later than the quarterly report due April 30, 1996), excluding:

(i) Descriptions of adjustments, corrective action, and maintenance;

(ii) Information which is incompatible with electronic reporting (e.g., field data sheets, lab analyses, quality control plan);

(iii) Opacity data listed in §75.50(f) or §75.54(f);

(iv) For units with SO_2 or NO_X add-on emission controls that do not elect to use the approved site-specific parametric monitoring procedures for calculation of substitute data, the information in §75.55(b)(3); and

(v) The information recorded under §75.56(a)(7) for the period prior to January 1, 1996.

[§75.64(a)(1) revised at 60 FR 26566, May 17, 1995]

Copyright 1993-1997, The Bureau of National Affairs, Inc.

(2) Tons (rounded to the nearest tenth) of SO_2 emitted during the quarter and cumulative SO_2 emissions for calendar year.

(3) Average NO_x emission rate (lb/mmBtu, rounded to the nearest hundredth) during the quarter and cumulative NO_x emission rate for calendar year.

(4) Tons of CO_2 emitted during quarter and cumulative CO_2 emissions for calendar year.

(5) Total heat input (mmBtu) for quarter and cumulative heat input for calendar year.

[§75.64(a)(5) revised at 60 FR 26513, May 17, 1995]

(6) If the affected unit is using a qualifying Phase I technology, then the quarterly report shall include the information required in paragraph (e) of this section.

(b) The designated representative shall affirm that the component/system identification codes and formulas in the quarterly electronic reports, submitted to the Administrator pursuant to §75.53, represent current operating conditions.

[§75.64(b) amended at 60 FR 26513, May 17, 1995]

(c) *Compliance certification* . The designated representative shall submit a certification in support of each quarterly emissions monitoring report based on reasonable inquiry of those persons with primary responsibility for ensuring that all of the unit's emissions are correctly and fully monitored. The certification shall indicate whether the monitoring data submitted were recorded in accordance with the applicable requirements of this part including the quality control and quality assurance procedures and specifications of this part and its appendices, and any such requirements, procedures and specifications of an applicable excepted or approved alternative monitoring method. In the event of any missing data periods, the certification must describe the measures taken to cure the causes for the missing data periods. For a unit with add-on emission controls, the designated representative shall also include a certification for all hours where data are substituted following the provisions of §75.34(a)(1) , that the add-on emission controls were operating within the range of parameters listed in the monitoring plan, and that the substitute values recorded during the quarter do not systematically underestimate SO_2 or NO_X emissions, pursuant to §75.34.

[§75.64(c) revised at 60 FR 26566, May 17, 1995]

(d) *Electronic format.* Each quarterly report shall be submitted in a format to be specified by the Administrator, including both electronic submission of data and paper submission of compliance certifications.

[§75.64(d) amended at 60 FR 26513, May 17, 1995]

Copyright 1993-1997, The Bureau of National Affairs, Inc.

(e) *Phase I qualifying technology reports.* In addition to reporting the information in paragraphs (a), (b), and (c) of this section, the designated representative for an affected unit on which SO_2 emission controls have been installed and operated for the purpose of meeting qualifying Phase I technology requirements pursuant to §72.42 of this chapter shall also submit reports documenting the measured percent SO_2 emissions removal to the Administrator on a quarterly basis, beginning the first quarter of 1997 and continuing through the fourth quarter of 1999. Each report shall include all measurements and calculations necessary to substantiate that the qualifying technology achieves the overall percentage reduction in SO_2 emissions.

[§75.64(e) introductory text amended at 60 FR 26513, May 17, 1995]

(1)-(2) [Removed]

[§75.64(e)(1) and (2) removed at 60 FR 26513, May 17, 1995]

40 CFR 75.65 Opacity reports.

[§75.65 revised at 60 FR 26513, May 17, 1995]

The owner or operator or designated representative shall report excess emissions of opacity recorded under § §75.50(f) or 75.54(f) to the applicable State or local air pollution control agency, in a format specified by the applicable State or local air pollution control agency.

40 CFR 75.66 Petitions to the Administrator.

(a) *General.* The designated representative for an affected unit subject to the requirements of this part may submit petitions to the Administrator. Any petitions shall be submitted in accordance with the requirements of this section. The designated representative shall comply with the signatory requirements of §72.21 of this chapter for each submission.

[New §75.66(a) added at 60 FR 26513, May 17, 1995]

(b) *Alternative flow monitoring method petition.* In cases where no location exists for installation of a flow monitor in either the stack or the ducts serving an affected unit that satisfies the minimum physical siting criteria in appendix A of this part or where installation of a flow monitor in either the stack or duct is demonstrated to the satisfaction of the Administrator to be technically infeasible, the designated representative for the affected unit may petition the Administrator for an alternative method for monitoring volumetric flow. The petition shall, at a minimum, contain the following information:

(1) Identification of the affected unit(s);

(2) Description of why the minimum siting criteria cannot be met within the existing ductwork or stack(s). This description shall include diagrams of the existing ductwork or stack, as well as documentation of any attempts to locate a flow monitor; and

Copyright 1993-1997, The Bureau of National Affairs, Inc.

(3) Description of proposed alternative method for monitoring flow.

[Former §75.66(a) revised and redesignated as new (b) at 60 FR 26513, May 17, 1995]

(c) *Alternative to standards incorporated by reference.* The designated representative for an affected unit may apply to the Administrator for an alternative to any standard incorporated by reference and prescribed in this part. The designated representative shall include the following information in an application:

(1) A description of why the prescribed standard is not being used;

(2) A description and diagram(s) of any equipment and procedures used in the proposed alternative;

(3) Information demonstrating that the proposed alternative produces data acceptable for use in the Acid Rain Program, including accuracy and precision statements, NIST traceability certificates or protocols, or other supporting data, as applicable to the proposed alternative.

[Former §75.66(b) revised and redesignated as new (c) at 60 FR 26513, May 17, 1995]

(d) *Alternative monitoring system petitions.* The designated representative for an affected unit may submit a petition to the Administrator for approval and certification of an alternative monitoring system or component according to the procedure in subpart E of this part. Each petition shall contain the information and data specified in subpart E, including the information specified in §75.48, in a format to be specified by the Administrator.

[Former §75.66(c) redesignated as new (d) at 60 FR 26513, May 17, 1995]

(e) *Parametric monitoring procedure petitions.* The designated representative for an affected unit may submit a petition to the Administrator, where each petition shall contain the information specified in §75.51(b) (or §75.55(b), no later than January 1, 1996) for use of a parametric monitoring method. The Administrator will either:

(1) Publish a notice in the **Federal Register** indicating receipt of a parametric monitoring procedure petition;, or

(2) Notify interested parties of receipt of a parametric monitoring petition.

[Former §76.66(d) redesignated as new (e) at 60 FR 26513, May 17, 1995; revised at 60 FR 26566, May 17, 1995]

(f) *Missing data petitions for units with add-on emission controls.* The designated representative for an affected unit may submit a petition to the Administrator for the use of the maximum controlled emission rate, which the Administrator will approve if the petition adequately demonstrates that all the requirements in §75.34(a)(2) are satisfied. Each petition shall contain the information listed below for the time period (or data gap) during which the affected

Copyright 1993-1997, The Bureau of National Affairs, Inc.

unit experienced the monitor outage that would otherwise result in the substitution of an uncontrolled maximum value under the standard missing data procedures contained in subpart D of this part:

(1) Data demonstrating that the affected unit's monitor data availability for the time period under petition was less than 90.0 percent;

(2) Data demonstrating that the add- on emission controls were operating properly during the time period under petition (i.e., operating parameters were within the ranges specified for proper operation of the add-on emission controls in the quality assurance/quality control program for the unit);

[§75.66(f)(2) amended at 61 FR 59162, Nov. 20, 1996]

(3) A list of the average hourly values for the previous 720 quality-assured monitor operating hours, highlighting both the maximum recorded value and the value corresponding to the maximum controlled emission rate; and

(4) An explanation and information on operation of the add-on emission controls demonstrating that the selected historical SO_2 concentration or NO_X emission rate does not underestimate the SO_2 concentration or NO_X emission rate during the missing data period.

[Former §76.66(e) redesignated as new (f) at 60 FR 26513, May 17, 1995; revised at 60 FR 26566, May 17, 1995]

[§75.66(g) and (h) added at 60 FR 26513, May 17, 1995]

(g) *Petitions for emissions or heat input apportionments.* The designated representative of an affected unit shall provide information to describe a method for emissions or heat input apportionment under §§75.13, 75.16, 75.17, or appendix D of this part. This petition may be submitted as part of the monitoring plan. Such a petition shall contain, at a minimum, the following information:

(1) A description of the units, including their fuel type, their boiler type, and their categorization as Phase I units, substitution units, compensating units, Phase II units, new units, or non-affected units;

(2) A formula describing how the emissions or heat input are to be apportioned to which units;

(3) A description of the methods and parameters used to apportion the emissions or heat input; and

(4) Any other information necessary to demonstrate that the apportionment method accurately measures emissions or heat input and does not underestimate emissions or heat input from affected units.

Copyright 1993-1997, The Bureau of National Affairs, Inc.

(h) *Partial recertification petition.* The designated representative of an affected unit may provide information and petition the Administrator to specify which of the certification tests required by §75.20 apply for partial recertification of the affected unit. Such a petition shall include the following information:

(1) Identification of the monitoring system(s) being changed;

(2) A description of the changes being made to the system;

(3) An explanation of why the changes are being made; and

(4) A description of the possible effect upon the monitoring system's ability to measure, record, and report emissions.

(i) *Any other petitions to the Administrator under this part.* The designated representative for an affected unit shall include sufficient information for the evaluation of any other petition submitted to the Administrator under this part.

[Former §75.66(f) revised and redesignated as new (i) at 60 FR 26513, May 17, 1995]

40 CFR 75.67 Retired units petitions.

[§75.67 revised at 60 FR 71111, April 4, 1995]

(a) For units that will be permanently retired prior to January 1, 1995, if the designated representative submits a complete petition, as required in §72.8 of this chapter, to the Administrator prior to the deadline in §75.4 by which the continuous emission or opacity monitoring systems must complete the required certification tests, the Administrator will issue an exemption from the requirements of this part, including the requirement to install and certify continuous emission monitoring systems.

[§75.67(a) revised at 60 FR 26513, May 17, 1995]

(b) For combustion sources seeking to enter the Opt-in Program in accordance with part 74 of this chapter that will be permanently retired and governed upon entry into the Opt-in Program by a thermal energy plan in accordance with §74.47 of this chapter, an exemption from the requirements of this part, including the requirement to install and certify a continuous emissions monitoring system, may be obtained from the Administrator if the designated representative submits to the Administrator a petition for such an exemption prior to the deadline in §75.4 by which the continuous emission or opacity monitoring systems must complete the required certification tests.

Appendix A to Part 75—Specifications and Test Procedures

Copyright 1993-1997, The Bureau of National Affairs, Inc.

1. Installation and Measurement Location

1.1 Pollutant Concentration and CO_2 or O_2 Monitors

Following the procedures in section 3.1 of Performance Specification 2 in Appendix B to part 60 of this chapter, install the pollutant concentration monitor or monitoring system at a location where the pollutant concentration and emission rate measurements are directly representative of the total emissions from the affected unit. Select a representative measurement point or path for the monitor probe(s) (or for the path from the transmitter to the receiver) such that the SO_2 pollutant concentration monitor or NO_x continuous emission monitoring system (NO_x pollutant concentration monitor and diluent gas monitor) will pass the relative accuracy test (see section 6 of this Appendix).

[1.1 corrected at 58 FR 40746, July 30, 1993]

It is recommended that monitor measurements be made at locations where the exhaust gas temperature is above the dew- point temperature. If the cause of failure to meet the relative accuracy tests is determined to be the measurement location, relocate the monitor probe(s).

1.1.1 Point Pollutant Concentration and CO_2 or O_2 Monitors

Locate the measurement point (1) within the centroidal area of the stack or duct cross section, or (2) no less than 1.0 meter from the stack or duct wall.

1.1.2 Path Pollutant Concentration and CO_2 or O_2 Gas Monitors

Locate the measurement path (1) totally within the inner area bounded by a line 1.0 meter from the stack or duct wall, or (2) such that at least 70.0 percent of the path is within the inner 50.0 percent of the stack or duct cross-sectional area, or (3) such that the path is centrally located within any part of the centroidal area.

[1.1.2 revised at 60 FR 26513, May 17, 1995]

1.2 Flow Monitors

Install the flow monitor in a location that provides representative volumetric flow over all operating conditions. Such a location is one that provides an average velocity of the flue gas flow

Copyright 1993-1997, The Bureau of National Affairs, Inc.

over the stack or duct cross section, provides a representative SO_2 emission rate (in lb/hr), and is representative of the pollutant concentration monitor location. Where the moisture content of the flue gas affects volumetric flow measurements, use the procedures in both Reference Methods 1 and 4 of Appendix A to part 60 of this chapter to establish a proper location for the flow monitor. The EPA recommends (but does not require) performing a flow profile study following the procedures in 40 CFR part 60, Method, 1, section 2.5 or 2.4 for each of the three operating or load levels indicated in section 6.5.2 of this appendix to determine the acceptability of the potential flow monitor location and to determine the number and location of flow sampling points required to obtain a representative flow value. The procedure in 40 CFR part 60, Appendix A, Test Method 1, section 2.5 may be used even if the flow measurement location is greater than or equal to 2 equivalent stack or duct diameters downstream or greater than or equal to ½ duct diameter upstream from a flow disturbance. If a flow profile study shows that cyclonic (or swirling) or stratified flow conditions exist at the potential flow monitor location that are likely to prevent the monitor from meeting the performance specifications of this part, then EPA recommends either (1) selecting another location where there is no cyclonic (or swirling) or stratified flow condition, or (2) eliminating the cyclonic (or swirling) or stratified flow condition by straightening the flow, e.g., by installing straightening vanes. EPA also recommends selecting flow monitor locations to minimize the effects of condensation, coating, erosion, or other conditions that could adversely affect flow monitor performance.

[1.2 corrected at 58 FR 34126, June 23, 1993; amended at 60 FR 26513, May 17, 1995]

1.2.1 Acceptability of Monitor Location

The installation of a flow monitor is acceptable if either (1) the location satisfies the minimum siting criteria of Method 1 in Appendix A to part 60 of this chapter (i.e., the location is greater than or equal to eight stack or duct diameters downstream and two diameters upstream from a flow disturbance; or, if necessary, two stack or duct diameters downstream and one-half stack or duct diameter upstream from a flow disturbance), or (2) the results of a flow profile study, if performed, are acceptable (i.e., there are no cyclonic (or swirling) or stratified flow conditions), and the flow monitor also satisfies the performance specifications of this part. If the flow monitor is installed in a location that does not satisfy these physical criteria, but nevertheless the monitor achieves the performance specifications of this part, then the location is acceptable, notwithstanding the requirements of this section.

[1.2.1 revised at 60 FR 26513, May 17, 1995]

1.2.2 Flow Monitor Certification Date Extension

Whenever the designated representative successfully demonstrates that modifications to the exhaust duct or stack (such as installation of straightening vanes, modifications of ductwork, and

Copyright 1993-1997, The Bureau of National Affairs, Inc.

the like) are necessary for the flow monitor to meet the performance specifications, the Administrator may approve an interim alternative flow monitoring methodology and an extension to the required certification date for the flow monitor.

[1.2.2 corrected at 58 FR 34126, June 23, 1993; 58 FR 40746, July 30, 1993; amended at 60 FR 26513, May 17, 1995]

Whenever the owner or operator successfully demonstrates that modifications to the exhaust duct or stack (such as installation of straightening vanes, modifications of ductwork, and the like) are necessary for the flow monitor to meet the performance specifications, the Administrator may approve an interim alternative flow monitoring methodology and an extension to the required certification date for the flow monitor.

Where no location exists that satisfies the physical siting criteria in section 1.2.1, where the results of flow profile studies performed at two or more alternative flow monitor locations are unacceptable, or where installation of a flow monitor in either the stack or the ducts is demonstrated to be technically infeasible, the owner or operator may petition the Administrator for an alternative method for monitoring flow.

2. Equipment Specifications

2.1 Instrument Span

In implementing sections 2.1.1 through 2.1.4 of this appendix, to the extent practicable, measure at a range such that the majority of readings obtained during normal operation are between 25 and 75 percent of full-scale range of the instrument.

[2.1.1—2.1.1.2 amended at 60 FR 26513, May 17, 1995]

2.1.1 SO_2 Pollutant Concentration Monitors

Determine, as indicated below, the span value for an SO_2 pollutant concentration monitor so that all expected concentrations can be accurately measured and recorded.

2.1.1.1 Maximum Potential Concentration

The monitor must be capable of accurately measuring up to 125 percent of the maximum potential concentration (MPC) as calculated using Equation A-1a or A-1b. Calculate the maximum potential concentration by using Equation A-1a or A-1b and the maximum percent sulfur and minimum gross calorific value (GCV) for the highest sulfur fuel to be burned, using

Copyright 1993-1997, The Bureau of National Affairs, Inc.

daily fuel sample data if they are available. If an SO_2 CEMS is already installed, the owner or operator may determine an MPC based upon the maximum concentration observed during the previous 30 unit operating days when using the type of fuel to be burned. For initial certification, base the maximum percent sulfur and minimum GCV on the results of all available fuel sampling and analysis data from the previous 12 months (where such data exists). If the unit has not been operated during that period, use the maximum sulfur content and minimum GCV from the fuel contract for fuel that will be combusted by the unit. Whenever the fuel supply changes such that these maximum sulfur and minimum GCV values may change significantly, base the maximum percent sulfur and minimum GCV on the new fuel with the highest sulfur content. Use the one of the two following methods that results in a higher MPC: (1) results of samples representative of the new fuel supply, or (2) maximum sulfur and minimum GCV from the fuel contract for fuel that will be combusted by the unit. Whenever performing fuel sampling to determine the MPC, use ASTM Methods ASTM D3177-89, "Standard Test Methods for Total Sulfur in the Analysis Sample of Coal and Coke," ASTM D4239-85, "Standard Test Methods for Sulfur in the Analysis Sample of Coal and Coke Using High Temperature Tube Furnace Combustion Methods," ASTM D4294-90, "Standard Test Method for Sulfur in Petroleum Products by Energy- Dispersive X-Ray Fluorescence Spectroscopy," ASTM D1552-90, "Standard Test Method for Sulfur in Petroleum Products (High Temperature Method)," ASTM D129-91, "Standard Test Method for Sulfur in Petroleum Products (General Bomb Method)," or ASTM D2622-92, "Standard Test Method for Sulfur in Petroleum Products by X-Ray Spectrometry" for sulfur content of solid or liquid fuels, or ASTM D3176-89, "Standard Practice for Ultimate Analysis of Coal and Coke", ASTM D240-87 (Reapproved 1991), "Standard Test Method for Heat of Combustion of Liquid Hydrocarbon Fuels by Bomb Calorimeter", or ASTM D2015-91, "Standard Test Method for Gross Calorific Value of Coal and Coke by the Adiabatic Bomb Calorimeter" for GCV (incorporated by reference under §75.6). Multiply the maximum potential concentration by 125 percent, and round up the resultant concentration to the nearest multiple of 100 ppm to determine the span value. The span value will be used to determine the concentrations of the calibration gases. Include the full- scale range setting and calculations of the span and MPC in the monitoring plan for the unit. Select the full-scale range of the instrument to be consistent with section 2.1 of this appendix, and to be greater than or equal to the span value. This selected monitor range with a span rounded up from 125 percent of the maximum potential concentration will be the "high-scale" of the SO_2 pollutant concentration monitor.

IMAGES

Where,

MPC=Maximum potential concentration (ppm, wet basis). (To convert to dry basis, divide the MPC by 0.9.)

%S=Maximum sulfur content of fuel to be fired, wet basis, weight percent, as determined by ASTM D3177-89, ASTM D4239-85, ASTM D4294-90, ASTM D1552-90, ASTM D129-91, or ASTM D2622-92 for solid or liquid fuels (incorporated by reference under §75.6).

GCV=Minimum gross calorific value of the fuel lot consistent with the sulfur analysis (Btu/lb),

Copyright 1993-1997, The Bureau of National Affairs, Inc.

$$MPC = 11.32 \times 10^6 \left(\frac{\%S}{GCV} \right) \left(\frac{20.9 - \%O_{2w}}{20.9} \right) \qquad \text{(Eq. A} - \text{1a)}$$

or

$$MPC = 66.93 \times 10^6 \left(\frac{\%S}{GCV} \right) \left(\frac{\%CO_{2w}}{100} \right) \qquad \text{(Eq. A} - \text{1b)}$$

as determined using ASTM D3176-89, ASTM D240-87 (Reapproved 1991), or ASTM D2015-91 (incorporated by reference under §75.6).

$\%O_{2w}$=Minimum oxygen concentration, percent wet basis, under normal operating conditions.

$\%CO_{2w}$=Maximum carbon dioxide concentration, percent wet basis, under normal operating conditions.

11.32×10^6=Oxygen-based conversion factor in (Btu/lb)(ppm)/%.

6.93×10^6=Carbon dioxide-based conversion factor in (Btu/lb)(ppm)/%

Note: All percent values to be inserted in the equations of this section are to be expressed as a percentage, not a fractional value, e.g., 3, not .03.

[2.1.1.1 revised at 61 FR 25582, May 22, 1996]

2.1.1.2 Maximum Expected Concentration

If the majority of SO_2 concentration values are predicted to be less than 25 percent of the full-scale range of the instrument selected under section 2.1.1.1 of this appendix, (e.g., where an SO_2 add-on emission control is used or where fuel with different sulfur contents are blended), use an additional (lower) measurement range. For this second range, use Equation A-2 to calculate the maximum expected concentration (MEC) for units with emission controls. For units blending fuels, calculate the MEC using a best estimate of the highest sulfur content and lowest gross calorific value expected for the blend and inserting these values into Equation A-1. If an SO_2 CEMS is already installed, the owner or operator may calculate an MEC based upon the maximum concentration measured by the CEMS over a thirty-day period, provided that there have been no full-scale exceedances since the range was last selected. Multiply the maximum expected concentration by 125 percent, and round up the resultant concentration to the nearest multiple of 10 ppm to determine the span value for the additional (lower) range. The span value of this additional range will also be used to determine concentrations of the calibration gases for this additional range. Report the full-scale range setting and calculations of the MEC and span in the monitoring plan for the unit. Select the full-scale range of the instrument of this additional (lower) range to be consistent with section 2.1 of this appendix, and to be greater than or equal to the lower range span value. This selected monitor range with a span rounded up from 125 percent of the MEC will be the "low-scale" of the SO_2 pollutant concentration monitor. Units using a low-scale range must also be capable of accurately measuring the anticipated concentrations up to and including 125 percent of the maximum potential concentration. If an existing State, local, or Federal requirement for span of an SO_2 pollutant concentration monitor requires a span other than that required in this section, but less than that required for the high-scale by this appendix, the State, local or Federal span value may be approved, where a satisfactory explanation is included in the monitoring plan.

MEC=MPC[(100-RE)/100] (Eq. A-2)

Where:

Copyright 1993-1997, The Bureau of National Affairs, Inc.

MEC=Maximum expected concentration (ppm).
MPC=Maximum potential concentration (ppm), as determined by Eq. A-1a or A-1b.
RE = Expected average design removal efficiency of control equipment (%).

2.1.1.3 Auto-ranging Monitors

For monitors that can continuously and automatically adjust their range of measurement, the monitor must be capable at any time of accurately measuring up to 125 percent of the maximum potential concentration, as calculated using Equation A-1a or A-1b. Define the span value(s) for an auto-ranging monitor as 125 percent of the maximum potential concentration and 125 percent of the maximum expected concentration if a second span is determined to be necessary under section 2.1.1.2 of this appendix. Determine concentrations of the calibration gases based upon the span value(s).

2.1.1.4 Adjustment of Span

Wherever the SO_2 concentration exceeds the maximum potential concentration but does not exceed the full-scale range during more than one clock-hour and the monitor can measure and record the SO_2 concentration accurately, it may be reported for use in the Acid Rain Program. If the concentration exceeds the monitor's ability to measure and record values accurately during a clock hour, and the full-scale exceedance is not during an out-of-control period, report the full-scale value as the SO_2 concentration for that clock hour. If full-scale exceedances occur during more than one clock hour since the last adjustment of the full-scale range setting, adjust the full-scale range setting to prevent future exceedances.

Whenever the fuel supply or emission controls change such that the maximum expected or potential concentration may change significantly, adjust the span and range setting to assure the continued proper operation of the monitoring system. Determine the adjusted span using the procedures in sections 2.1.1.1 or 2.1.1.2 of this appendix. Select the full scale range of the instrument to be greater than or equal to the new span value and to be consistent with the guidelines of section 2.1 of this appendix. Record and report the new full-scale range setting, calculations of the span, MPC, and MEC (if appropriate), and the adjusted span value, in an updated monitoring plan. In addition, record and report the adjusted span as part of the records for the daily calibration error test and linearity check specified by appendix B of this part. Whenever the span value is adjusted, use calibration gas concentrations based on the most recent adjusted span value. Perform a linearity check according to section 6.2 of this appendix whenever making a change to the monitor span or range. Recertification under §75.20(b) is required whenever a significant change in the monitor's range also requires an internal modification to the monitor (e.g., a change of measurement cell length).

[2.1.1.4 amended at 60 FR 26513, May 17, 1995]

Copyright 1993-1997, The Bureau of National Affairs, Inc.

2.1.2 NO_x Pollutant Concentration Monitors

Determine, as indicated below, the span value(s) for the NO_X pollutant concentration monitor so that all expected NO_X concentrations can be determined and recorded accurately including both the maximum expected and potential concentration.

[2.1.2 amended at 60 FR 26513, May 17, 1995]

2.1.2.1 Maximum Potential Concentration

The monitor must be capable of accurately measuring up to 125 percent of the maximum potential concentration (MPC) as determined below in this section. Use 800 ppm for coal-fired and 400 ppm for oil- or gas-fired units as the maximum potential concentration of NOx, unless a more representative MPC is determined by one of the following methods (If an MPC of 1600 ppm for coal-fired units or 480 ppm for oil- or gas-fired units was previously selected under this part, that value may still be used.): (1) NO_X emission test results, (2) historical CEM data over the previous 30 unit operating days; or (3) specific values based on boiler-type and fuel combusted, listed in Table 2-1 or Table 2-2 if other data under (1) or (2) were not available. Multiply the MPC by 125 percent and round up to the nearest multiple of 100 ppm to determine the span value. The span value will be used to determine the concentrations of the calibration gases.

Report the full-scale range setting, and calculations of the MPC, maximum potential NO_X emission rate, and span in the monitoring plan for the unit. Select the full-scale range of the instrument to be consistent with section 2.1 of this appendix, and to be greater than or equal to the span value. This selected monitor range with a span rounded up from 125 percent of the maximum potential concentration will be the "high-scale" of the NO_X pollutant concentration monitor.

If NO_X emission testing is used to determine the maximum potential NO_X concentration, use the following guidelines: Use Method 7E from appendix A of part 60 of this chapter to measure total NO_X concentration. Operate the unit, or group of units sharing a common stack, at the minimum safe and stable load, the normal load, and the maximum load. If the normal load and maximum load are identical, an intermediate level need not be tested. Operate at the highest excess O_2 level expected under normal operating conditions. Make at least three runs with three traverse points of at least 20 minutes duration at each operating condition. Select the highest NO_X concentration from all measured values as the maximum potential concentration for NOx. If historical CEM data are used to determine the MPC, the data must represent various operating conditions, including the minimum safe and stable load, normal load, and maximum load. Calculate the MPC and span using the highest hourly NO_X concentration in ppm. If no test data or historical CEM data are available, use Table 2-1 or Table 2-2 to estimate the maximum

Copyright 1993-1997, The Bureau of National Affairs, Inc.

potential concentration based upon boiler type and fuel used.

Table 2-1.--Maximum Potential Concentration for NO_X--Coal-Fired Units

Unit type	Maximum potential concentration for NO_X (ppm).
Tangentially-fired dry bottom and fluidized bed.....	460
Wall-fired dry bottom, turbo-fired dry bottom, stokers.....	675
Roof-fired (vertically-fired) dry bottom, cell burners, arch-fired.....	975
Cyclone, wall-fired wet bottom, wet bottom turbo-fired.....	1200
Others.....	As approved by the Administrator.

Table 2-2.--Maximum Potential Concentration For NO_X--Gas-And Oil-Fired Units

Unit type	Maximum potential concentration for NO_X (ppm)
Tangentially-fired dry bottom.....	380
Wall-fired dry bottom.....	600
Roof-fired (vertically-fired) dry bottom, arch-fired...	550
Existing combustion turbine or combined cycle turbine.....	200
New stationary gas turbine/combustion turbine.....	50
Others.....	As approved by the Administrator.

[2.1.2.1 revised at 60 FR 26513, May 17, 1995]

2.1.2.2 Maximum Expected Concentration

If the majority of NO_X concentrations are expected to be less than 25 percent of the full-scale range of the instrument selected under section 2.1.2.1 of this appendix (e.g., where a NO_X add-on emission control is used) use a "low-scale" measurement range. For units with add-on emission controls, determine the maximum expected concentration (MEC) of NO_X using Equation A-2, inserting the maximum potential concentration, as determined using the procedures

Copyright 1993-1997, The Bureau of National Affairs, Inc.

in section 2.1.2.1 of this appendix. Where Equation A-2 is not appropriate, set the MEC, either (1) by measuring the NO_X concentration using the testing procedures in section 2.1.2.1 of this appendix, or (2) by using historical CEM data over the previous 30 unit operating days. Other methods for determining the MEC may be accepted if they are satisfactorily explained in the monitoring plan. If an existing State, local, or Federal requirement for span of an NO_X pollutant concentration monitor requires a span other than that required in this section, but less than that required for the high scale by this appendix, the State, local, or Federal span value may be approved, where a satisfactory explanation is included in the monitoring plan. Calculate the span for the additional (lower) range by multiplying the maximum expected concentration by 125 percent and by rounding up the resultant concentration to the nearest multiple of 10 ppm. The span value of this additional (lower) range will also be used to determine the concentrations of the calibration gases. Include the full-scale range setting and calculations of the MEC and span in the monitoring plan for the unit. Select the full-scale range of the instrument to be consistent with section 2.1 of this appendix, and to be greater or equal to the lower range span value. This selected monitor range with a span rounded up from 125 percent of the maximum expected concentration is the "low-scale" of NO_X pollutant concentration monitors. NO_X pollutant concentration monitors on affected units with NO_X emission controls, or on other units with monitors using a low-scale range, must also be capable of accurately measuring up to 125 percent of the maximum potential concentration. For dual-span NO_X pollutant concentration monitors, determine the concentration of calibration gases based on both span values.

[2.1.2.2 revised at 60 FR 26513, May 17, 1995]

2.1.2.3 Auto-ranging monitors

For monitors that can continuously and automatically adjust their range of measurement, the monitor must be capable at any time of accurately measuring up to 125 percent of the maximum potential concentration as defined in section 2.1.2.1 of this appendix. Define the span value(s) for an auto-ranging monitor as 125 percent of the maximum potential concentration and 125 percent of the maximum expected concentration if a second span is determined to be necessary under section 2.1.2.2 of this appendix. Determine concentrations of the calibration gases based upon the span value(s).

2.1.2.4 Adjustment of Span

Wherever the actual NO_X concentration exceeds the maximum potential concentration but does not exceed the full- scale range for more than one clock-hour and the monitor can measure and record the NO_X concentration values accurately, the NO_X concentration values may be reported for use in the Acid Rain Program. If the concentration exceeds the monitor's ability to measure and record values accurately during a clock hour, and the full- scale exceedance is not during an

Copyright 1993-1997, The Bureau of National Affairs, Inc.

out-of- control period, report the full-scale value as the NO_X concentration for that clock hour. If full-scale exceedances occur during more than one clock hour since the last adjustment of the full-scale range setting, adjust the full-scale range setting to prevent future exceedances.

Whenever the fuel supply, emission controls, or other process parameters change such that the maximum expected concentration or the maximum potential concentration may change significantly, adjust the NO_X pollutant concentration span and monitor range to assure the continued accuracy of the monitoring system. Determine the adjusted span value using the procedures in sections 2.1.2.1 or 2.1.2.2 of this appendix. Select the new full scale range of the instrument to be greater than or equal to the adjusted span value and to be consistent with the guidelines of section 2.1 of this appendix. Record and report the new full-scale range setting, calculations of the span value, MPC, and MEC (if appropriate), maximum potential NO_X emission rate and the adjusted span value in an updated monitoring plan for the unit. In addition, record and report the adjusted span as part of the records for the daily calibration error test and linearity check required by appendix B of this part. Whenever the span value is adjusted, use calibration gas concentrations based on the most recent adjusted span value. Perform a linearity check according to section 6.2 of this appendix whenever making a change to the monitor span or range. Recertification under §75.20(b) is required whenever a significant change is made in the monitor's range that requires an internal modification to the monitor (e.g., a change of measurement cell length).

[2.1.2.4 revised at 60 FR 26513, May 17, 1995]

2.1.3 CO_2 and O_2 Monitors

Define the "high scale" span value as 20 percent O_2 or 20 percent CO_2. All O_2 and CO_2 analyzers must have "high- scale" measurement capability. Select the full-scale range of the instrument to be consistent with section 2.1 of this appendix, and to be greater than or equal to the span value. If the O_2 or CO_2 concentrations are expected to be consistently low, a "low scale" measurement range may be used for increased accuracy, provided that it is consistent with section 2.1 of this appendix. Include a span value for the low- scale range in the monitoring plan. Select the calibration gas concentrations as percentages of the span value.

[2.1.3 revised at 60 FR 26513, May 17, 1995]

2.1.4 Flow Monitors

Select the full-scale range of the flow monitor so that it is consistent with section 2.1 of this appendix, and can accurately measure all potential volumetric flow rates at the flow monitor installation site. For this purpose, determine the span value of the flow monitor using the following procedure. Calculate the maximum potential velocity (MPV) using Equation A-3a or

Copyright 1993-1997, The Bureau of National Affairs, Inc.

A-3b or determine the MPV or maximum potential flow rate (MPF) in scfh (wet basis) from velocity traverse testing. If using test values, use the highest velocity measured at or near the maximum unit operating load. Calculate the MPV in units of wet standard fpm. Then, if necessary, convert the MPV to equivalent units of flow rate (e.g., scfh or kscfh) or differential pressure (inches of water), consistent with the measurement units used for the daily calibration error test to calculate the span value. Multiply the MPV (in equivalent units) by 125 percent, and round up the result to no less than 2 significant figures. Report the full- scale range setting, and calculations of the span value, MPV and MPF in the monitoring plan for the unit.

Where:

MPV=maximum potential velocity (fpm. standard wet basis),

Fd=dry-basis F factor (dscf/mmBtu) from Table 1, Appendix F of this part,

Fc=carbon-based F factor (scfCO2/mmBtu) from Table 1, Appendix F of this part,

Hf=maximum, heat input (mmBtu/minute) for all units, combined, exhausting to the stack or duct where the flow monitor is located,

A=inside cross sectional area (ft2) of the flue at the flow monitor location,

%O2d=maximum oxygen concentration, percent dry basis, under normal operating conditions,

%CO2d=minimum carbon dioxide concentration, percent dry basis, under normal operating conditions.

$\%H_2O$ = maximum percent flue gas moisture content under normal operating conditions.

If the volumetric flow rate exceeds the maximum potential flow calculated from the maximum potential velocity but does not exceed the full scale range during more than one clock hour and the flow monitor can accurately measure and record values, the flow rate may be reported for use in the Acid Rain Program. If the volumetric flow rate exceeds the monitor's ability to measure and record values accurately during a clock hour, and the full- scale exceedance is not during an out-of- control period, report the full-scale value as the flow rate for that clock hour. If full- scale exceedance occurs during more than one hour since the last adjustment of the full-scale range setting, adjust the full- scale range setting to prevent future exceedances. If the fuel supply, process parameters or other conditions change such that the maximum potential velocity may change significantly, adjust the range to assure the continued accuracy of the flow monitor. Calculate an adjusted span using the procedures in this section. Select the full-scale range of the instrument to be greater than or equal to the adjusted span value. Record and report the new full-scale range setting, calculations of the span value, MPV, and MPF, and the adjusted span value in an updated monitoring plan for the unit. Record and report the adjusted span and reference values as parts of the records for the calibration error test required by appendix B of this part. Whenever the span value is adjusted, use reference values for the calibration error test based on the most recent adjusted span value.

Perform a calibration error test according to section 2.1.2 of this appendix whenever making a change to the flow monitor span or range. Recertification under §75.20(b) is required whenever making a significant change in the flow monitor's range that requires an internal modification to

Copyright 1993-1997, The Bureau of National Affairs, Inc.

$$MPV = \left(\frac{F_d H_f}{A}\right)\left(\frac{20.9}{20.9 - \%O_{2d}}\right)\left[\frac{100}{100 - \%H_2O}\right] \qquad \text{(Eq. A} - \text{3a)}$$

or

$$MPV = \left(\frac{F_c H_f}{A}\right)\left(\frac{100}{\%CO_{2d}}\right)\left[\frac{100}{100 - \%H_2O}\right] \qquad \text{(Eq. A} - \text{3b)}$$

the monitor.

[2.1.4 corrected at 58 FR 34126, June 23, 1993; revised at 60 FR 26513, May 17, 1995; amended at 61 FR 25582, May 22, 1996]

2.2 Design for Quality Control Testing

2.2.1 Pollutant Concentration and CO_2 or O_2 Monitors

Design and equip each pollutant concentration and CO_2 or O_2 monitor with a calibration gas injection port that allows a check of the entire measurement system when calibration gases are introduced. For extractive and dilution type monitors, all monitoring components exposed to the sample gas, (e.g., sample lines, filters, scrubbers, conditioners, and as much of the probe as practicable) are included in the measurement system. For in situ type monitors, the calibration must check against the injected gas for the performance of all active electronic and optical components (e.g. transmitter, receiver, analyzer).

Design and equip each pollutant concentration or CO_2 or O_2 monitor to allow daily determinations of calibration error (positive or negative) at the zero- and high-level concentrations specified in Section 5.2 of this Appendix.

2.2.2 Flow Monitors

Design all flow monitors to meet the applicable performance specifications.

2.2.2.1 Calibration Error Test

Design and equip each flow monitor to allow for a daily calibration error test consisting of at least two reference values: (1) Zero to 20 percent of span or an equivalent reference value (e.g., pressure pulse or electronic signal) and (2) 50 to 70 percent of span. Flow monitor response, both before and after any adjustment, must be capable of being recorded by the data acquisition and handling system. Design each flow monitor to allow a daily calibration error test of (1) the entire flow monitoring system, from and including the probe tip (or equivalent) through and including the data acquisition and handling system, or (2) the flow monitoring system from and including the transducer through and including the data acquisition and handling system.

2.2.2.2 Interference Check

Design and equip each flow monitor with a means to ensure that the moisture expected to occur

Copyright 1993-1997, The Bureau of National Affairs, Inc.

at the monitoring location does not interfere with the proper functioning of the flow monitoring system. Design and equip each flow monitor with a means to detect, on at least a daily basis, pluggage of each sample line and sensing port, and malfunction of each resistance temperature detector (RTD), transceiver or equivalent.

Design and equip each differential pressure flow monitor to provide (1) an automatic, periodic back purging (simultaneously on both sides of the probe) or equivalent method of sufficient force and frequency to keep the probe and lines sufficiently free of obstructions on at least a daily basis to prevent velocity sensing interference, and (2) a means for detecting leaks in the system on at least a quarterly basis (manual check is acceptable).

Design and equip each thermal flow monitor with a means to ensure on at least a daily basis that the probe remains sufficiently clean to prevent velocity sensing interference.

Design and equip each ultrasonic flow monitor with a means to ensure on at least a daily basis that the transceivers remain sufficiently clean (e.g., backpurging system) to prevent velocity sensing interference.

3. Performance Specifications

3.1 Calibration Error

The initial calibration error performance specification of SO_2 and NO_x pollutant concentration monitors shall not deviate from the reference value of the calibration gas by more than 2.5 percent based upon the span of the instrument, as calculated using Eq. A-5 of this appendix. Alternatively, where the span value is less than 200 ppm, calibration error test results are also acceptable if the absolute value of the difference between the monitor response value and the reference value, R-A in Equation A-5 of this appendix, is less than or equal to 5 ppm. The calibration error of CO_2 or O_2 monitors shall not deviate from the reference value of the zero- or high-level calibration gas by more than 0.5 percent O_2 or CO_2 as calculated using the term R-A in the numerator of Eq. A-5 of this appendix. The calibration error of flow monitors shall not exceed 3.0 percent based upon the span of the instrument as calculated using Eq. A-6 of this appendix.

3.2 Linearity Check

For SO_2 and NO_x pollutant concentration monitors, the error in linearity for each calibration gas concentration (low-, mid-, and high-levels) shall not exceed or deviate from the reference value by more than 5.0 percent (as calculated using Equation A-4 of this appendix). Linearity check results are also acceptable if the absolute value of the difference between the average of the monitor response values and the average of the reference values, R-A in Equation A-4 of this appendix, is less than or equal to 5 ppm. For CO_2 or O_2 monitors:

Copyright 1993-1997, The Bureau of National Affairs, Inc.

(1) The error in linearity for each calibration gas concentration (low-, mid-, and high-levels) shall not exceed or deviate from the reference value by more than 5.0 percent as calculated using Equation A-4 of this appendix; or

(2) The absolute value of the difference between the average of the monitor response values and the average of the reference values, R-A in Equation A-4 of this appendix, shall be less than or equal to 0.5 percent CO_2 or O_2, whichever is less restrictive.

[3.2 corrected at 58 FR 34126, June 23, 1993]

3.3 Relative Accuracy

3.3.1 Relative Accuracy for SO_2

The relative accuracy for SO_2 pollutant concentration monitors and for SO_2-diluent continuous emission monitoring systems used by units with a qualifying Phase I technology for the period during which the units are required to monitor SO_2 emission removal efficiency, from January 1, 1997 through December 31, 1999, shall not exceed 10.0 percent except as provided below in this section.

For affected units where the average of the monitor measurements of SO_2 concentration during the relative accuracy test audit is less than or equal to 250.0 ppm (or for SO_2-diluent monitors, less than or equal to 0.5 lb/mmBTU), the mean value of the monitor measurements shall not exceed ±15.0 ppm of the reference method mean value (or, for SO_2-diluent monitors, not to exceed ±0.03 lb/mmBTU for the period during which the units are required to monitor SO_2 emission removal efficiency, from January 1, 1997 through December 31, 1999) wherever the relative accuracy specification of 10.0 percent is not achieved.

3.3.2 Relative Accuracy for NO_x

The relative accuracy for NO_x continuous emission monitoring systems shall not exceed 10.0 percent.

For affected units where the average of the monitoring system measurements of NO_x emission rate during the relative accuracy test audit is less than or equal to 0.20 lb/mmBtu, the mean value of the NO_x continuous emission monitoring system measurements shall not exceed ±0.02 lb/mmBtu of the reference method mean value wherever the relative accuracy specification of 10.0 percent is not achieved.

Copyright 1993-1997, The Bureau of National Affairs, Inc.

3.3.3 Relative Accuracy for CO_2 and O_2 Pollutant Concentration Monitors

The relative accuracy for CO_2 and O_2 monitors shall not exceed 10.0 percent. The relative accuracy test results are also acceptable if the mean difference of the CO_2 or O_2 monitor measurements and the corresponding reference method measurement, calculated using Equation A-7 of this appendix, is within 1.0 percent CO_2 or O_2.

[3.3.3 amended at 60 FR 26513, May 17, 1995]

3.3.4 Relative Accuracy for Flow

Except as provided below in this section, the relative accuracy for flow monitors, where volumetric gas flow is measured in scfh, shall not exceed 15.0 percent through December 31, 1999. Beginning on January 1, 2000, (except as provided below in this section) the relative accuracy of flow monitors shall not exceed 10.0 percent.

For affected units where the average of the flow monitor measurements of gas velocity during one or more operating levels of the relative accuracy test audit is less than or equal to 10.0 fps, the mean value of the flow monitor velocity measurements shall not exceed ±2.0 fps of the reference method mean value in fps wherever the relative accuracy specification above is not achieved.

3.3.5 Combined SO_2/Flow Monitoring System [Reserved]

3.4 Bias

3.4.1 SO_2 Pollutant Concentration Monitors and NO_x Continuous Emission Monitoring Systems.

SO_2 pollutant concentration monitors and NO_x continuous emission monitoring systems shall not be biased low as determined by the test procedure in section 7.6 of this appendix. The bias specification applies to all SO_2 pollutant concentration monitors, including those measuring an average SO_2 concentration of 250.0 ppm or less, and to all NO_x continuous emission monitoring systems, including those measuring an average NO_x emission rate of 0.20 lb/mmBtu or less

Copyright 1993-1997, The Bureau of National Affairs, Inc.

3.4.2 Flow Monitors

Flow monitors shall not be biased low as determined by the test procedure in section 7.6 of this appendix. The bias specification applies to all flow monitors including those measuring an average gas velocity of 10.0 fps or less.

3.5 Cycle Time

The cycle time for pollutant concentration monitors, and continuous emission monitoring systems shall not exceed 15 min.

[3.5 amended at 60 FR 26513, May 17, 1995]

4. Data Acquisition and Handling Systems

Automated data acquisition and handling systems shall: (1) Read and record the full range of pollutant concentrations and volumetric flow from zero through span; and (2) provide a continuous, permanent record of all measurements and required information as an ASCII flat file capable of transmission via an IBM-compatible personal computer diskette or other electronic media. These systems also shall have the capability of interpreting and converting the individual output signals from an SO_2 pollutant concentration monitor, a flow monitor, and a NO_x continuous emissions monitoring system to produce a continuous readout of pollutant mass emission rates in the units of the standard. Where CO_2 emissions are measured with a continuous emission monitoring system, the data acquisition and handling system shall also produce a readout of CO_2 mass emissions in tons.

Data acquisition and handling systems shall also compute and record monitor calibration error; any bias adjustments to pollutant concentration, flow rate, or NO_x emission rate data; and all missing data procedure statistics specified in subpart D of this part.

For an excepted monitoring system under appendix D or E of this part, data acquisition and handling systems shall:

(1) Read and record the full range of fuel flowrate through the upper range value;

(2) Calculate and record intermediate values necessary to obtain emissions, such as mass fuel flowrate and heat input rate;

(3) Calculate and record emissions in units of the standard (lb/hr of SO_2, lb/mmBtu of NO_X);

(4) Predict and record NO_X emission rate using the heat input rate and the NO_X/heat input correlation developed under appendix E of this part;

(5) Calculate and record all missing data substitution values specified in appendix D or E of this part; and

Copyright 1993-1997, The Bureau of National Affairs, Inc.

(6) Provide a continuous, permanent record of all measurements and required information as an ASCII flat file capable of transmission via an IBM-compatible personal computer diskette or other electronic media.

[4. amended at 60 FR 26513, May 17, 1995]

5. Calibration Gas

5.1 Reference Gases

For the purposes of part 75, calibration gases include the following.

5.1.1 Standard Reference Materials

These calibration gases may be obtained from the National Institute of Standards and Technology (NIST) at the following address: Quince Orchard and Cloppers Road, Gaithersburg, Maryland 20899.

5.1.2 NIST Traceable Reference Materials

[5.1.2 heading corrected at 58 FR 40746, July 30, 1993]
Contact the Quality Assurance Division (MD 77), Environmental Monitoring System Laboratory, U.S. Environmental Protection Agency, Research Triangle Park, North Carolina 27711 or the Organic Analytical Research Division of NIST at the above address for Standard Reference Materials for a list of vendors and cylinder gases.

[5.1.2 revised at 60 FR 26513, May 17, 1995]

5.1.3 EPA Traceability Protocol 1 Gases

Protocol 1 gases must be vendor-certified to be within 2.0 percent of the concentration specified on the cylinder label (tag value).

[5.1.4—5.1.6 added at 60 FR 26513, May 17, 1995]

5.1.4 Research Gas Mixtures

Copyright 1993-1997, The Bureau of National Affairs, Inc.

Contact the Quality Assurance Division (MD 77), Environmental Monitoring System Laboratory, U.S. Environmental Protection Agency, Research Triangle Park, North Carolina 27711 or the Organic Analytical Research Division of NIST at the above address for Standard Reference Materials for a list of vendors and cylinder gases.

5.1.5 Zero Air Material

Use zero air material for calibrating at zero-level concentrations only. Zero air material shall be certified by the gas vendor or instrument manufacturer or vendor not to contain concentrations of SO_2 or NO_X above 0.1 ppm or CO_2 above 400 ppm, and not to contain concentrations of other gases that will interfere with instrument readings or cause the instrument to read concentrations of SO_2, NO_X, or CO_2.

5.1.6 NIST/EPA-approved Certified Reference Materials

Existing certified reference materials as previously certified under EPA's former certified reference material program may be used for the remainder of the cylinder's shelf life.

5.2 Concentrations

Four concentration levels are required as follows.

5.2.1 Zero-level Concentration

0 to 20 percent of span, including span for high scale or both low- and high-scale for SO_2 and NO_x pollutant concentration monitors, as appropriate.

5.2.2 Low-level Concentration

20 to 30 percent of span, including span for high scale or both low- and high-scale for SO_2 and NO_x pollutant concentration monitors, as appropriate.

5.2.3 Mid-level Concentration

50 to 60 percent of span, including span for high scale or both low- and high-scale for SO_2 and NO_x pollutant concentration monitors, as appropriate.

Copyright 1993-1997, The Bureau of National Affairs, Inc.

5.2.4 High-level Concentration

80 to 100 percent of span, including span for high scale or both low- and high- scale for SO_2 and NO_x pollutant concentration monitors, as appropriate.

6. Certification Tests and Procedures

6.1 Pretest Preparation

Install the components of the continuous emission monitoring system (i.e., pollutant concentration monitors, CO_2 or O_2 monitor, and flow monitor) as specified in sections 1, 2, and 3 of this appendix, and prepare each system component and the combined system for operation in accordance with the manufacturer's written instructions. Operate the unit(s) during each period when measurements are made. Units may be tested on non-consecutive days. To the extent practicable, test the DAHS software prior to testing the monitoring hardware.

[6.1 amended at 60 FR 26513, May 17, 1995]

6.2 Linearity Check

Measure the linearity of each pollutant concentration monitor and CO_2 or O_2 monitor according to the following procedures.

Challenge each pollutant concentration or CO_2 or O_2 monitor with NIST/EPA- approved certified reference material, NIST traceable reference material, standard reference material, or Protocol 1 calibration gases certified to be within 2 percent of the concentration specified on the label at the low-, mid-, or high-level concentrations specified in section 5.2 of this appendix. For units using emission controls and other units using a maximum expected concentration value to determine calibration gases, perform a linearity check on both the low- and high-scales.

Introduce the calibration gas at the gas injection port, as specified in section 2.2.1 of this appendix. Operate each monitor at its normal operating temperature and conditions. For extractive and dilution type monitors, pass the calibration gas through all filters, scrubbers, conditioners, and other monitor components used during normal sampling and through as much of the sampling probe as is practical. For in situ type monitors, perform calibration checking all active electronic and optical components, including the transmitter, receiver, and analyzer.

[6.2 corrected at 58 FR 40746, July 30, 1993; amended at 60 FR 26513, May 17, 1995]

Repeat the procedure for SO_2 and NO_x pollutant concentration monitors using the low-scale for

Copyright 1993-1997, The Bureau of National Affairs, Inc.

units equipped with emission controls with dual span monitors. Challenge the monitor three times with each reference gas. Do not use the same gas twice in succession. Record the monitor response from the data acquisition and handling system (see example data sheet in Figure 1). For each concentration, use the average of the responses to determine the error in linearity using Equation A-4 in this appendix.

Linearity checks are acceptable for monitor or monitoring system certification if none of the test results exceed the applicable performance specifications in section 3.2 of this appendix.

6.3 7-Day Calibration Error Test

6.3.1 Pollutant Concentration Monitor and CO_2 or O_2 Monitor 7-day Calibration Error Test

[6.3.3 added at 60 FR 26566, May 17, 1995; former 6.3.3 revised and redesignated as new 6.3.1 at 61 FR 59162, Nov. 20, 1996]

Measure the calibration error of each pollutant concentration monitor and CO_2 or O_2 monitor while the unit is operating once each day for 7 consecutive operating days according to the following procedures. (In the event that extended unit outages occur after the commencement of the test, the 7 consecutive unit operating days need not be 7 consecutive calendar days.) Units using dual span monitors must perform the calibration error test on both high- and low-scales of the pollutant concentration monitor.

Do not make manual or automatic adjustments to the monitor settings until after taking measurements at both zero and high concentration levels for that day during the 7-day test. If automatic adjustments are made following both injections, conduct the calibration error test in a way that the magnitude of the adjustments can be determined and recorded. Record and report test results for each day using the unadjusted concentration measured in the calibration error test prior to making any manual or automatic adjustments (i.e. resetting the calibration).

The calibration error tests should be approximately 24 hours apart, (unless the 7-day test is performed over non-consecutive days). Perform calibration error tests at two concentrations: (1) zero-level and (2) high-level, as specified in section 5.2 of this appendix. In addition, repeat the procedure for SO_2 and NO_X pollutant concentration monitors using the low- scale for units equipped with emission controls or other units with dual span monitors. Use only NIST traceable reference material, standard reference material, NIST/EPA-approved certified reference material, research gas material, Protocol 1 calibration gases certified by the vendor to be within 2 percent of the label value or zero air material for the zero level only.

Introduce the calibration gas at the gas injection port, as specified in section 2.2.1 of this appendix. Operate each monitor in its normal sampling mode. For extractive and dilution type monitors, pass the audit gas through all filters, scrubbers, conditioners, and other monitor components used during normal sampling and through as much of the sampling probe as is

Copyright 1993-1997, The Bureau of National Affairs, Inc.

practical. For in situ type monitors, perform calibration checking all active electronic and optical components, including the transmitter, receiver, and analyzer. Challenge the pollutant concentration monitors and CO_2 or O_2 monitors once with each gas. Record the monitor response from the data acquisition and handling system. Using Equation A-5 of this appendix, determine the calibration error at each concentration once each day (at approximately 24-hour intervals) for 7 consecutive days according to the procedures given in this section.

Calibration error tests are acceptable for monitor or monitoring system certification if none of these daily calibration error test results exceed the applicable performance specifications in section 3.1 of this appendix.

6.3.2 Flow Monitor 7-day Calibration Error Test

[6.3.4 added at 60 FR 26566, May 17, 1995; former 6.3.4 redesignated as new 6.3.2 at 61 FR 59162, Nov. 20, 1996]

Measure the calibration error of each flow monitor according to the following procedures.

Introduce the reference signal corresponding to the values specified in section 2.2.2.1 of this appendix to the probe tip (or equivalent), or to the transducer. During the 7-day certification test period, conduct the calibration error test while the unit is operating once each unit operating day (as close to 24-hour intervals as practicable). In the event that extended unit outages occur after the commencement of the test, the 7 consecutive operating days need not be 7 consecutive calendar days. Record the flow monitor responses by means of the data acquisition and handling system. Calculate the calibration error using Equation A-6 of this appendix.

Do not perform any corrective maintenance, repair, or replacement upon the flow monitor during the 7-day certification test period other than that required in the quality assurance/quality control (QA/QC) plan required by appendix B of this part. Do not make adjustments between the zero and high reference level measurements on any day during the 7- day test. If the flow monitor operates within the calibration error performance specification (i.e., less than or equal to 3 percent error each day and requiring no corrective maintenance, repair, or replacement during the 7-day test period) the flow monitor passes the calibration error test portion of the certification test. Record all maintenance activities and the magnitude of any adjustments. Record output readings from the data acquisition and handling system before and after all adjustments. Record and report all calibration error test results using the unadjusted flow rate measured in the calibration error test prior to resetting the calibration. Record all adjustments made during the seven day period at the time the adjustment is made and report them in the certification application.

6.4 Cycle Time Test

[6.4 amended at 60 FR 26566, May 17, 1995; revised at 61 FR 59162, Nov. 20, 1996]

Perform cycle time tests for each pollutant concentration monitor, and continuous emission

Copyright 1993-1997, The Bureau of National Affairs, Inc.

monitoring system while the unit is operating, according to the following procedures (see also Figure 6 of this appendix).

Use a zero-level and a high-level calibration gas (as defined in section 5.2 of this appendix) alternately. To determine the upscale elapsed time, inject a zero- level concentration calibration gas into the probe tip (or injection port leading to the calibration cell, for in situ systems with no probe). Record the stable starting gas value and start time, using the data acquisition and handling system (DAHS). Next, allow the monitor to measure the concentration of flue gas emissions until the response stabilizes. Record the stable ending stack emissions value and the end time of the test using the DAHS. Determine the upscale elapsed time as the time it takes for 95.0 percent of the step change to be achieved between the stable starting gas value and the stable ending stack emissions value. Then repeat the procedure, starting by injecting the high- level gas concentration to determine the downscale elapsed time, which is the time it takes for 95.0 percent of the step change to be achieved between the stable starting gas value and the stable ending stack emissions value. End the downscale test by measuring the stable concentration of flue gas emissions. Record the stable starting and ending monitor values, the start and end times, and the downscale elapsed time for the monitor using the DAHS. A stable value is equivalent to a reading with a change of less than 2 percent of the span value for 2 minutes, or a reading with a change of less than 6 percent from the measured average concentration over 6 minutes. (Owners or operators of systems which do not record data in 1-minute or 3-minute intervals may petition the Administrator under §75.66 for alternative stabilization criteria).

For monitors or monitoring systems that perform a series of operations (such as purge, sample, and analyze), time the injections of the calibration gases so they will produce the longest possible cycle time. Report the slower ofthe two elapsed times (upscale or downscale) as the cycle time for the analyzer. (See Figure 5 of this appendix.) For the NO_X-diluent continuous emission monitoring system test and SO_2-diluent continuous emission monitoring system test, record and report the longer cycle time of the two component analyzers as the system cycle time.

For time-shared systems, this procedure must be done at all probe locations that will be polled within the same 15-minute period during monitoring system operations. To determine the cycle time for time-shared systems, add together the longest cycle time obtained at each of the probe locations. Report the sum of the longest cycle time at each of the probe locations plus the sum of the time required for all purge cycles (as determined by the continuous emission monitoring system manufacturer) at each of the probe locations as the cycle time for each of the time-shared systems. For monitors with dual ranges, report the test results from on the range giving the longer cycle time. Cycle time test results are acceptable for monitor or monitoring system certification if none of the cycle times exceed 15 minutes.

6.4.1 [Reserved]

[6.4.1 added at 60 FR 26566, May 17, 1995; removed at 61 FR 59162, Nov. 20, 1996]

Copyright 1993-1997, The Bureau of National Affairs, Inc.

6.5 Relative Accuracy and Bias Tests

Perform relative accuracy test audits for each CO_2 and SO_2 pollutant concentration monitor, each O_2 monitor used to calculate heat input or CO_2 concentration, each SO_2-diluent continuous emission monitoring system (lb/mmBtu) used by units with a qualifying Phase I technology for the period during which the units are required to monitor SO_2 emission removal efficiency, from January 1, 1997 through December 31, 1999, flow monitor, and NO_X continuous emission monitoring system. For monitors or monitoring systems with dual ranges, perform the relative accuracy test on one range measuring emissions in the stack at the time of testing. Record monitor or monitoring system output from the data acquisition and handling system. Perform concurrent relative accuracy test audits for each SO_2 pollutant concentration monitor and flow monitor, at least once a year (see section 2.3.1 of appendix B of this part), during the flow monitor test at the normal operating level specified in section 6.5.2 of this appendix. Concurrent relative accuracy test audits may be performed by conducting simultaneous SO_2 and flow relative accuracy test audit runs, or by alternating an SO_2 relative accuracy test audit run with a flow relative accuracy test audit run until all relative accuracy test audit runs are completed. Where two or more probes are in the same proximity, care should be taken to prevent probes from interfering with each other's sampling. For each SO_2 pollutant concentration monitor, each flow monitor, and each NO_X continuous emission monitoring system, calculate bias, as well as relative accuracy, with data from the relative accuracy test audits.

Complete each relative accuracy test audit within a 7-day period while the unit (or units, if more than one unit exhausts into the flue) is combusting the fuel that is normal for that unit. When relative accuracy test audits are performed on continuous emission monitoring systems or component(s) on bypass stacks/ducts, use the fuel normally combusted by the unit (or units, if more than one unit exhausts into the flue) when emissions exhaust through the bypass stack/ducts. Do not perform corrective maintenance, repairs, replacements or adjustments during the relative accuracy test audit other than as required in the operation and maintenance manual.

[6.5—6.5.2 revised at 60 FR 26513, May 17, 1995]

6.5.1 SO_2, O_2 and CO_2 Pollutant Concentration Monitors and SO_2-Diluent and NO_X Continuous Emission Monitoring Systems

Perform relative accuracy test audits for each SO_2, O_2 or CO_2 pollutant concentration monitor or NO_X continuous emission monitoring system or SO_2-diluent continuous emission monitoring system (lb/mmBtu) used by units with a qualifying Phase I technology for the period during which the units are required to monitor SO_2 emission removal efficiency, from January 1, 1997 through December 31, 1999, at a normal operating level for the unit (or combined units, if common stack).

Copyright 1993-1997, The Bureau of National Affairs, Inc.

6.5.2 Flow Monitors

Except for flow monitors on bypass stacks/ducts and peaking units, perform relative accuracy test audits for each flow monitor at three different exhaust gas velocities, expressed in terms of percent of flow monitor span, or different operating or load levels. For a common stack/duct, the three different exhaust gas velocities may be obtained from frequently used unit/load combinations for units exhausting to the common stack. Select the operating levels as follows: (1) A frequently used low operating level selected within the range between the minimum safe and stable operating level and 50 percent load, (2) a frequently used high operating level selected within the range between 80 percent of the maximum operating level and the maximum operating level, and (3) the normal operating level. If the normal operating level is within 10.0 percent of the maximum operating level of either (1) or (2) above, use a level that is evenly spaced between the low and high operating levels used. The maximum operating level shall be equal to the nameplate capacity less any physical or regulatory limitations or other deratings. Calculate flow monitor relative accuracy at each of the three operating levels. If a flow monitor fails the relative accuracy test on any of the three levels of a three-level relative accuracy test audit, the three-level relative accuracy test audit must be repeated. For flow monitors on bypass stacks/ducts and peaking units, the flow monitor relative accuracy test audit is required only at the normal operating level.

6.5.3 CO_2 Pollutant Concentration Monitors

Perform relative accuracy test audits for each CO_2 monitor (measuring in percent CO_2) at a normal operating level for the unit (or combined units, if common stack).

6.5.4 Calculations

Using the data from the relative accuracy test audits, calculate relative accuracy and bias in accordance with the procedures and equations specified in section 7 of this appendix.

[6.5.5—6.5.7 revised at 60 FR 26513, May 17, 1995]

6.5.5 Reference Method Measurement Location

Select a location for reference method measurements that is (1) accessible; (2) in the same proximity as the monitor or monitoring system location; and (3) meets the requirements of Performance Specification 2 in appendix B of part 60 of this chapter for SO_2 and NO_X continuous emission monitoring systems, Performance Specification 3 in appendix B of part 60 of this chapter for CO_2 or O_2 monitors, or Method 1 (or 1A) in appendix A of part 60 of this

Copyright 1993-1997, The Bureau of National Affairs, Inc.

chapter for volumetric flow, except as otherwise indicated in this section or as approved by the Administrator.

6.5.6 Reference Method Traverse Point Selection

Select traverse points that (1) ensure acquisition of representative samples of pollutant and diluent concentrations, moisture content, temperature, and flue gas flow rate over the flue cross section; and (2) meet the requirements of Performance Specification 2 in appendix B of part 60 of this chapter (for SO_2 and NO_X), Performance Specification 3 in appendix B of part 60 of this chapter (for O_2 and CO_2), Method 1 (or 1A) (for volumetric flow), Method 3 (for molecular weight), and Method 4 (for moisture determination) in appendix A of part 60 of this chapter.

6.5.7 Sampling Strategy

Conduct the reference method tests so they will yield results representative of the pollutant concentration, emission rate, moisture, temperature, and flue gas flow rate from the unit and can be correlated with the pollutant concentration monitor, CO_2 or O_2 monitor, flow monitor, and SO_2 or NO_X continuous emission monitoring system measurements. Conduct the diluent (O_2 or CO_2) measurements and any moisture measurements that may be needed simultaneously with the pollutant concentration and flue gas flow rate measurements. If an O_2 monitor is used as a CO_2 continuous emission monitoring system, but not as a diluent monitor, measure CO_2 with the reference method. To properly correlate individual SO_2 and CO_2 pollutant concentration monitor data, O_2 monitor data, SO_2 or NO_X continuous emission monitoring system data (in lb/mmBtu), and volumetric flow rate data with the reference method data, mark the beginning and end of each reference method test run (including the exact time of day) on the individual chart recorder(s) or other permanent recording device(s).

6.5.8 Correlation of Reference Method and Continuous Emission Monitoring System

Confirm that the monitor or monitoring system and reference method test results are on consistent moisture, pressure, temperature, and diluent concentration basis (e.g., since the flow monitor measures flow rate on a wet basis, Method 2 test results must also be on a wet basis). Compare flow-monitor and reference method results on a scfh basis. Also, consider the response times of the pollutant concentration monitor, the continuous emission monitoring system, and the flow monitoring system to ensure comparison of simultaneous measurements.

For each relative accuracy test audit run, compare the measurements obtained from the monitor or continuous emission monitoring system (in ppm, percent CO_2, lb/mmBtu, or other units) against the corresponding reference method values. Tabulate the paired data in a table such as the

Copyright 1993-1997, The Bureau of National Affairs, Inc.

one shown in Figure 2.

6.5.9 Number of Reference Method Tests

Perform a minimum of nine sets of paired monitor (or monitoring system) and reference method test data for every required (i.e., certification, semiannual, or annual) relative accuracy or bias test audit. For the certification and annual quality assurance relative accuracy test audits for flow monitors, perform a minimum of nine sets at each of the three operating levels specified in section 6.5.2 of this appendix. Conduct each set within a period of 30 to 60 minutes.

Note: The tester may choose to perform more than nine sets of reference method tests. If this option is chosen, the tester may reject a maximum of three sets of the test results as long as the total number of test results used to determine the relative accuracy or bias is greater than or equal to nine. Report all data, including the rejected data, and reference method test results.

6.5.10 Reference Methods

The following methods from appendix A to part 60 of this chapter or their approved alternatives are the reference methods for performing relative accuracy test audits: Method 1 or 1A for siting; Method 2 (or 2A, 2C, or 2D) for velocity; Methods 3, 3A, or 3B for O_2 or CO_2 ; Method 4 for moisture; Methods 6 , 6A, or 6C for SO_2; Methods 7 , 7A, 7C, 7D, 7E for NO_X, excluding the exception in section 5.1.2 of Method 7E . When using Method 7E for measuring NO_X concentration, total NO_X, both NO and NO_2, must be measured.

[6.5.10 revised at 60 FR 26513, May 17, 1995]

7. Calculations

7.1 Linearity Check

Analyze the linearity data for pollutant concentration and CO_2 or O_2 monitors as follows. Calculate the percentage error in linearity based upon the reference value at the low-level, mid-level, and high-level concentrations specified in section 6.2 of this appendix. Perform this calculation once during the certification test. Use the following equation to calculate the error in linearity for each reference value.

$$LE = \frac{|R - A|}{R} \times 100$$

Copyright 1993-1997, The Bureau of National Affairs, Inc.

(Eq. A-4)
where,
LE=Percentage Linearity error, based upon the reference value.
R=Reference value of Low-, mid-, or high-level calibration gas introduced into the monitoring system.
A=Average of the monitoring system responses.

7.2 Calibration Error

7.2.1 Pollutant Concentration and Diluent Monitors

For each reference value, calculate the percentage calibration error based upon instrument span for daily calibration error tests using the following equation:

$$CE = \frac{|R - A|}{S} \times 100$$

(Eq. A-5)
where,
CE=Percentage Calibration error based upon span of the instrument.
R=Reference value of zero- or high-level calibration gas introduced into the monitoring system.
A=Actual monitoring system response to the calibration gas.
S=Span of the instrument, as specified in Section 2 of this appendix.

7.2.2 Flow Monitor Calibration Error

For each reference value, calculate the percentage calibration error based upon span using the following equation:

where:
CE=Calibration error;
R=Low or high level reference value specified in section 2.2.2.1 of this appendix;
A=Actual flow monitor response to the reference value; and
S=Flow monitor span or equivalent reference value (e.g., pressure pulse or electronic signal).

[7.2.2 revised at 60 FR 26513, May 17, 1995]

Copyright 1993-1997, The Bureau of National Affairs, Inc.

$$CE = \frac{|R - A|}{S} \times 100 \qquad \text{(Eq. A–6)}$$

7.3 Relative Accuracy for SO_2 and CO_2 Pollutant Concentration Monitors, SO_2-Diluent Continuous Emission Monitoring Systems, and Flow Monitors

[7.3 heading amended at 60 FR 26513, May 17, 1995]

Analyze the relative accuracy test audit data from the reference method tests for SO_2 and CO_2 pollutant concentration monitors, SO_2-diluent continuous emission monitoring systems (lb/mmBtu) used by units with a qualifying Phase I technology for the period during which the units are required to monitor SO_2 emission removal efficiency, from January 1, 1997 through December 31, 1999, and flow monitors using the following procedures. Summarize the results on a data sheet. An example is shown in Figure 2. Calculate the mean of the monitor or monitoring system measurement values. Calculate the mean of the reference method values. Using data from the automated data acquisition and handling system, calculate the arithmetic differences between the reference method and monitor measurement data sets. Then calculate the arithmetic mean of the difference, the standard deviation, the confidence coefficient, and the monitor or monitoring system relative accuracy using the following procedures and equations.

7.3.1 Arithmetic Mean

Calculate the arithmetic mean of the differences, $\bar{d}$ of a data set as follows.

$$\bar{d} = \frac{1}{n} \sum_{i=1}^{n} d_i$$

(Eq. A-7)

where,

n=Number of data points.

$\sum_{i=1}^{n} d_i$=Algebraic sum of the individual differences d_i.

d_i=The difference between a reference method value and the corresponding continuous emission monitoring system value (RM_i-CEM_i) at a given point in time i.

When calculating the arithmetic mean of the difference of a flow monitor data set, be sure to correct the monitor measurements for moisture if applicable.

[7.3.1 corrected at 58 FR 40746, July 30, 1993]

Copyright 1993-1997, The Bureau of National Affairs, Inc.

7.3.2 Standard Deviation

Calculate the standard deviation, S_d, of a data set as follows:

$$S_d = \sqrt{\frac{\sum_{i=1}^{n} d_i^2 - \left[\frac{\left(\sum_{i=1}^{n} d_i\right)^2}{n}\right]}{n-1}}$$

(Eq. A-8)

7.3.3 Confidence Coefficient

Calculate the confidence coefficient (one-tailed), cc, of a data set as follows.

$$CC = t_{0.025} \frac{S_d}{\sqrt{n}}$$

(eq. A-9)
where,
$t_{0.025}$=t value (see Table 7-1).

Table 7--1 T-Values

n-1	$t_{0.025}$	n-1	$t_{0.025}$	n-1	$t_{0.025}$
1.....	12,706	12	2,179	23	2.069
2.....	4,303	13	2,160	24	2,064
3.....	3,182	14	2,145	25	2,060
4.....	2,776	15	2,131	26	2,056
5.....	2,571	16	2.120	27	2,052
6.....	2,447	17	2,110	28	2,048
7.....	2,365	18	2,101	29	2,045
8.....	2,306	19	2,093	30	2,042
9.....	2,262	20	2,086	40	2,021
10.....	2,228	21	2,080	60	2,000
11.....	2,201	22	2,074	>60	1,960

7.3.4 Relative Accuracy

Copyright 1993-1997, The Bureau of National Affairs, Inc.

Calculate the relative accuracy of a data set using the following equation.

$$RA = \frac{|\bar{d}| + |CC|}{\overline{RM}} \times 100$$

(Eq. A-10)
where,
$\overline{RM}$=Arithmetic mean of the reference method values.
$\bar{d}$=The absolute value of the mean difference between the reference method values and the corresponding continuous emission monitoring system values.
cc=The absolute value of the confidence coefficient.

[7.3.4 corrected at 58 FR 40746, July 30, 1993]

7.4 Relative Accuracy for NO_x Continuous Emission Monitoring Systems

Analyze the relative accuracy test audit data from the reference method tests for NO_x continuous emissions monitoring system as follows.

7.4.1 Data Preparation

If C_{NOx}, the NO_x concentration, is in ppm, multiply it by 1.194×10^{-7} (lb/dscf)/ppm to convert it to units of lb/dscf. If C_{NOx} is in mg/dscm, multiply it by 6.24×10^{-8} (lb/dscf)/(mg/dscm) to convert it to lb/dscf. Then, use the diluent (O_2 or CO_2) reference method results for the run and the appropriate F or F_c factor from Table 1 in Appendix F of this part to convert C_{NOx} from lb/dscf to lb/mmBtu units. Use the equations and procedure in section 3 of Appendix F to this part, as appropriate.

7.4.2 NO_x Emission Rate (Monitoring System)

For each test run in a data set, calculate the average NO_x emission rate (in lb/mmBtu), by means of the data acquisition and handling system, during the time period of the test run. Tabulate the results as shown in example Figure 4.

7.4.3 Relative Accuracy

Use the equations and procedures in section 7.3 above to calculate the relative accuracy for the NO_x continuous emission monitoring system. In using Equation A- 7, "d" is, for each run, the

Copyright 1993-1997, The Bureau of National Affairs, Inc.

difference between the NO_x emission rate values (in lb/mmBtu) obtained from the reference method data and the NO_x continuous emission monitoring system.

7.5 Relative Accuracy for Combined SO_2/Flow [Reserved]

7.6 Bias Test and Adjustment Factor

Test the relative accuracy test audit data sets for SO_2 pollutant concentration monitors, flow monitors, and NO_X continuous emission monitoring systems for bias using the procedures outlined below.

7.6.1 Arithmetic Mean

Calculate the arithmetic mean of the difference, $\bar{d}$, of the data set using Equation A-7 of this appendix. To calculate bias for an SO_2 pollutant concentration monitor, "d" is, for each paired data point, the difference between the SO_2 concentration value (in ppm) obtained from the reference method and the monitor. To calculate bias for a flow monitor, "d" is, for each paired data point, the difference between the flow rate values (in scfh) obtained from the reference method and the monitor. To calculate bias for a NO_X continuous emission monitoring system, "d" is, for each paired data point, the difference between the NO_X emission rate values (in lb/mmBtu) obtained from the reference method and the monitoring system.

7.6.2 Standard Deviation

Calculate the standard deviation, S_d, of the data set using Equation A-8.

7.6.3 Confidence Coefficient

Calculate the confidence coefficient, cc, of the data set using Equation A-9.

7.6.4 Bias Test

If the mean difference, $\bar{d}$, is greater than the absolute value of the confidence coefficient, cc, the monitor or monitoring system has failed to meet the bias test requirement. For flow monitor bias tests, if the mean difference, $\bar{d}$, is greater than cc at the operating level closest to normal operating

Copyright 1993-1997, The Bureau of National Affairs, Inc.

level during the 3-level RATA, the monitor has failed to meet the bias test requirement. For flow monitors, apply the bias test at the operating level closest to normal operating level during the 3-level RATA.

[7.6.4 amended at 60 FR 26513, May 17, 1995]

7.6.5 Bias Adjustment

If the monitor or monitoring system fails to meet the bias test requirement, adjust the value obtained from the monitor using the following equation:

Where:

$CEM_i^{Monitor}$=Data (measurement) provided by the monitor at time i.

$CEM_i^{Adjusted}$=Data value, adjusted for bias, at time i.

BAF=Bias adjustment factor, defined by

$$BAF = 1 + \frac{|\bar{d}|}{\overline{CEM}} \qquad \text{(Eq. A – 12)}$$

Where:

BAF=Bias adjustment factor, calculated to the nearest thousandth.

d=Arithmetic mean of the difference obtained during the failed bias test using Equation A-7.

CEM=Mean of the data values provided by the monitor during the failed bias test.

If the bias test is failed by a flow monitor at the operating level closest to normal on a 3-level relative accuracy test audit, calculate the bias adjustment factor for each of the three operating levels. Apply the largest of the three bias adjustment factors to subsequent flow monitor data using Equation A-11.

Apply this adjustment prospectively to all monitor or monitoring system data from the date and time of the failed bias test until the date and time of a relative accuracy test audit that does not show bias. Use the adjusted values in computing substitution values in the missing data procedure, as specified in subpart D of this part, and in reporting the concentration of SO_2, the flow rate, and the average NO_X emission rate and calculated mass emissions of SO_2 and CO_2 during the quarter and calendar year, as specified in subpart G of this part.

[7.6.5 revised at 60 FR 26513, May 17, 1995; amended at 61 FR 25582, May 22, 1996]

Figure 1.--Linearity Error Determination

Day	Date and time	Reference value	Monitor value	Difference	Percent of reference value
Low-level					
Mid-level					

Copyright 1993-1997, The Bureau of National Affairs, Inc.

$$CEM_i^{Adjusted} = CEM_i^{Monitor} \times BAF \qquad \text{(Eq. A-11)}$$

High-
level

Figure 2.--Relative Accuracy Determination (Pollutant Concentration Monitors)

Run No.	Date and time	SO_2 (ppm[c](11)) RM[a](13)	M[b](14)	Diff	Date and time	CO_2 (Pollutant) (ppm[c](1. RM[a](15)	M[b](16)
1.....							
2.....							
3.....							
4.....							
5.....							
6.....							
7.....							
8.....							
9.....							
10.....							
11.....							
12.....							

Arithmetic Mean Difference (Eq. A-7)
Confidence Coefficient (Eq. A-9)
Relative Accuracy (Eq. A-10)

[a] RM means 'reference method data.'
[b] M means 'monitora data.'
[c] Make sure that RM and M data are on a consistent basis, either wet or dry.

Figure 3.--Relative Accuracy Determination (Flow Monitors)

Run No.	Date and time	Flow rate (Low) (scf/hr) *(17) RM	M	Diff	Date and time	Flow rate (Norm (scf/hr)*(18) RM	M
1.....							
2.....							
3.....							
4.....							
5.....							
6.....							
7.....							
8.....							
9.....							
10.....							
11.....							

Copyright 1993-1997, The Bureau of National Affairs, Inc.

12.....
Arithmetic Mean Difference (Eq. A-7)
Confidence Coefficient (Eq. A-9)
Relative Accuracy (Eq. A-10)

Run No.	Diff
1.....	
2.....	
3.....	
4.....	
5.....	
6.....	
7.....	
8.....	
9.....	
10.....	
11.....	
12.....	
Arithmeti	
Confidenc	
Relative	

* Make sure that RM and M data are on a consistent basis, either wet or dry.

Figure 4:--Relative Accuracy Determination (NO_x/diluent combined system)

Run No.	Date and time	Reference method data		NO_2 system (lb/mmBtu)		
		NO_x( )[a](20)	O_2/CO_2%	RM	M	Difference
1.....						
2.....						
3.....						
4.....						
5.....						
6.....						
7.....						
8.....						
9.....						
10.....						
11.....						
12.....						

Arithmetic Mean Difference (Eq. A-7)
Confidence Coefficient (Eq. A-9)
Relative Accuracy (Eq. A-10)

[a] Specify units; ppm, lb/decf,mg/dscm.

Copyright 1993-1997, The Bureau of National Affairs, Inc.

Figure 5—Cycle Time

Date of test——————
Component/system ID——#:
Analyzer type——————
Serial Number——————
High level gas concentration: ___ ppm/ (circle one)
Zero level gas concentration: ___ ppm/% (circle one)
Analyzer span setting: ____ppm/% (circle one)
Upscale:
Stable starting monitor value: ___ ppm/% (circle one)
Stable ending monitor reading: ___ ppm/% (circle one)
Elapsed time: ___ seconds
Downscale:
Stable starting monitor value: ___ ppm/% (circle one)
Stable ending monitor value: ___ ppm/% (circle one)
Elapsed time: ___ seconds
Component cycle time= ___ seconds
System cycle time= ___ seconds

[Figure 5 added at 60 FR 26566, May 17, 1995]

"Figure 6. Downscale Cycle Time Test"

A. To determine the downscale cycle time, inject a high level calibration gas into the port leading to the calibration cell or thimble.

B. Allow the analyzer to stabilize. Record the stabilized value. Stop the calibration gas flow and allow the monitor to measure the flue gas emissions until the response stabilizes.

C. Record the stabilized value. A stable reading is achieved when the concentration reading deviates less than 6% from the measured average concentration in 6 minutes or if it deviates less than 2% of the monitor's span value in 2 minutes. (Owners and operators of units that do not record data in 1 minute or 3 minute intervals may petition the Administrator under section 75.66 for alternative stabilization criteria.)

D. Determine the step change. The step change is equal to the difference between the stabilized calibration gas value (Point B) and the final stable value (Point C). Take 95% of the step change value and subtract the result from the stabilized calibration gas value (Point B). Determine the time at which 95% of the step change occurred (Point D).

E. Determine the cycle time. The cycle time is equal to the downscale elapsed time, i.e. the time at which 95% of the step change occurred (point D) minus the time at which the calibration gas flow was stopped (Point B). In this example, cycle time=(6.5-4)=2.5 minutes (Report as 3

Copyright 1993-1997, The Bureau of National Affairs, Inc.

Figure 6. Downscale Cycle Time Test

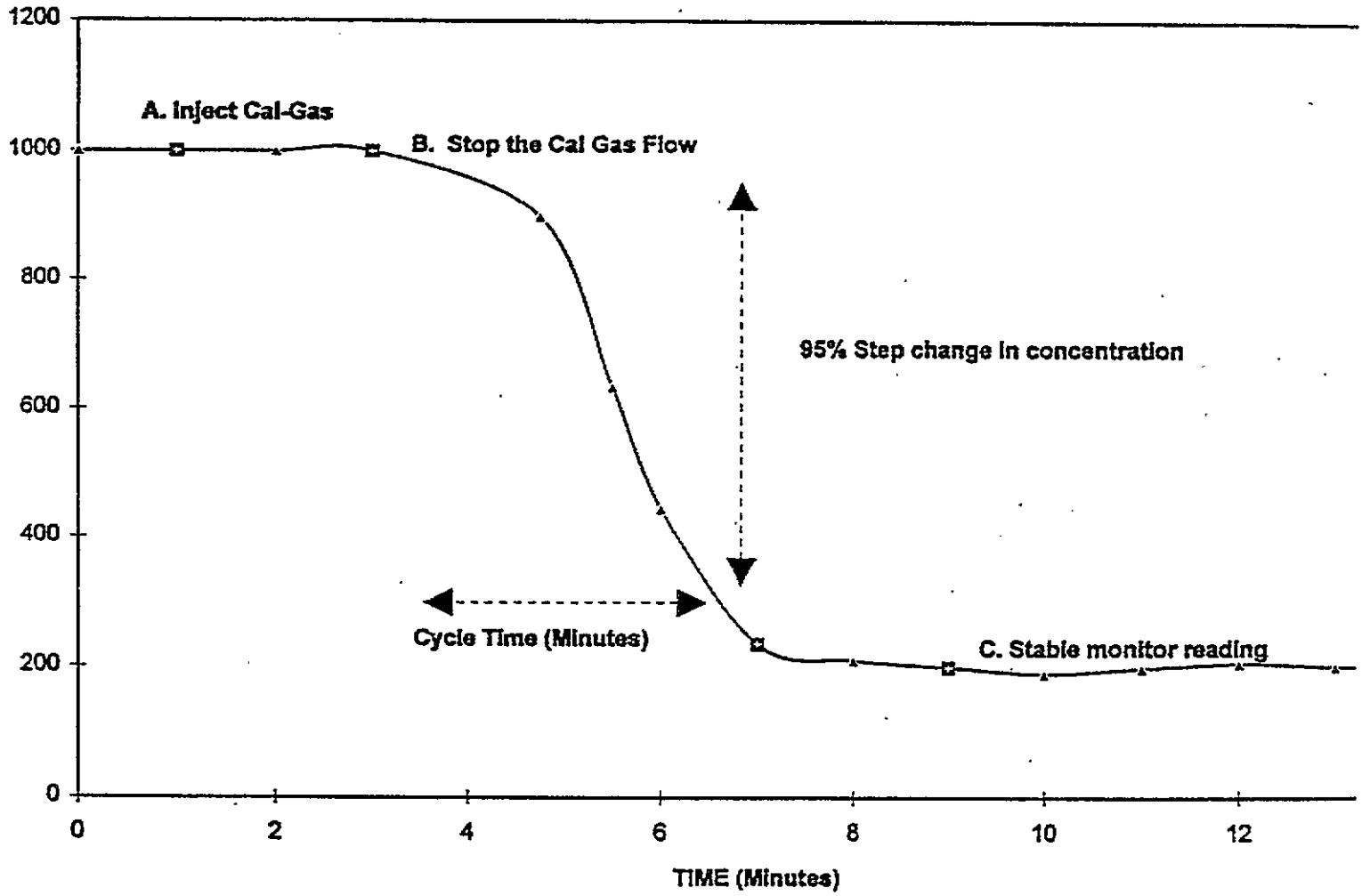

minutes).

F. To determine the cycle time for the upscale test, inject a zero scale calibration gas into the probe and repeat the procedures described above, except that 95% of the step change in concentration is added to the stabilized calibration gas value. Afterwards, compare the two cycle times achieved for both the upscale and downscale tests. The longer of these two times equals the cycle time for the analyzer.

[Figure 6 added at 61 FR 59162, Nov. 20, 1996]

Appendix B to Part 75—Quality Assurance and Quality Control Procedures

1. Quality Control Program

Develop and implement a quality control program for the continuous emission monitoring systems and their components. As a minimum, include in each quality control program a written plan that describes in detail complete, step-by-step procedures and operations for each of the following activities.

1.1 Calibration Error Test and Linearity Check Procedures

Identify calibration error test and linearity check procedures specific to the continuous emission monitoring system that may require variance from the procedures in Appendix A to this part (e.g., how gases are to be injected, adjustments of flow rates and pressures, introduction of reference values, length of time for injection of calibration gases, steps for obtaining calibration error or error in linearity, determination of interferences, and when calibration adjustments should be made).

1.2 Calibration and Linearity Adjustments

Explain how each component of the continuous emission monitoring system will be adjusted to provide correct responses to calibration gases, reference values, and/or indications of interference both initially and after repairs or corrective action. Identify equations, conversion factors, assumed moisture content, and other factors affecting calibration of each continuous emission monitoring system.

1.3 Preventive Maintenance

Keep a written record of procedures, including those specified by the manufacturers, needed to maintain the continuous emission monitoring system in proper operating condition and a schedule

Copyright 1993-1997, The Bureau of National Affairs, Inc.

for those procedures. Include provisions for maintaining an inventory of spare parts.

1.4 Audit Procedures

Keep a written record of procedures and details peculiar to the installed continuous emission monitoring system that are to be used for relative accuracy test audits, such as sampling and analysis methods.

1.5 Recordkeeping and Reporting

Keep a written record describing procedures that will be used to implement the recordkeeping and reporting requirements in subparts F and G of this part.

1.6 Parametric Monitoring for Units With Add-On Emission Controls

The owner or operator shall keep a written (or electronic) record including a list of operating parameters for the add- on SO_2 or NO_X emission controls, including parameters in §75.55(b) , and the range of each operating parameter that indicates the add-on emission controls are operating properly.

The owner or operator shall keep a written (or electronic) record of the parametric monitoring data during each hour of each SO_2 or NO_X missing data period.

[1.6 added at 61 FR 59165, Nov. 20, 1996]

2. Frequency of Testing

A summary chart showing each quality assurance test and the frequency at which each test is required is located at the end of this appendix in Figure 1.

2.1 Daily Assessments

Perform the following daily assessments to quality-assure the hourly data recorded by the monitoring systems during each period of unit operation, or, for a bypass stack or duct, each period in which emissions pass through the bypass stack or duct. These requirements are effective as of the date when the monitor or continuous emission monitoring system completes certification testing.

[2.1 amended at 60 FR 26566, May 17, 1995; 61 FR 59165, Nov. 20, 1996]

Copyright 1993-1997, The Bureau of National Affairs, Inc.

2.1.1 Calibration Error Test

Except as provided in section 2.1.1.2 of this appendix, perform the daily calibration error test of each gas monitoring system according to the procedure in section 6.3.1 of appendix A of this part and perform the daily calibration error test of each flow monitoring system according to the procedure in section 6.3.2 of appendix A of this part.

For units with add-on emission controls and dual-span or auto-ranging monitors, and other units that use the maximum expected concentration to determine calibration gas values, perform the daily calibration error tests on each scale that has been used since the previous calibration error test. For example, if the pollutant concentration has not exceeded the low- scale value (based on the maximum expected concentration) since the previous calibration error test, the calibration error test may be performed on the low-scale only. If, however, the concentration has exceeded the low-scale span value for one hour or longer since the previous calibration error test, perform the calibration error test on both the low- and high-scales.

[2.1.1 amended at 61 FR 59165, Nov. 20, 1996]

2.1.1.1 On-line Daily Calibration Error Tests. Except as provided in section 2.1.1.2 of this appendix, all daily calibration error tests must be performed while the unit is in operation at normal, stable conditions (i.e. "on-line").

[2.1.1.1 added at 61 FR 59165, Nov. 20, 1996]

2.1.1.2 Off-line Daily Calibration Error Tests. Daily calibrations may be performed while the unit is not operating (i.e., "off-line") and may be used to validate data for a monitoring system that meets the following conditions:

(1) An initial demonstration test of the monitoring system is successfully completed and the results are reported in the quarterly report required under §75.64 of this part. The initial demonstration test, hereafter called the "off-line calibration demonstration", consists of an off-line calibration error test followed by an on-line calibration error test. Both the off-line and on-line portions of the off-line calibration demonstration must meet the calibration error performance specification in >section 3.1 of appendix A of this part. Upon completion of the off-line portion of the demonstration, the zero and upscale monitor responses may be adjusted, but only toward the true values of the calibration gases or reference signals used to perform the test and only in accordance with the routine calibration adjustment procedures specified in the quality control program required under section 1 of appendix B to this part. Once these adjustments are made, no further adjustments may be made to the monitoring system until after completion of the on-line portion of the off-line calibration demonstration. Within 26 clock hours of the completion hour of the off-line portion of the demonstration, the monitoring system must successfully complete the first attempted calibration error test, i.e., the on-line portion of the demonstration.

(2) For each monitoring system that has passed the off-line calibration demonstration, a successful on-line calibration error test of the monitoring system must be completed no later than 26 unit operating hours after each off-line calibration error test used for data validation.

Copyright 1993-1997, The Bureau of National Affairs, Inc.

[2.1.1.2 added at 61 FR 59165, Nov. 20, 1996]

2.1.2 Daily Flow Interference Check

Perform the daily flow monitor interference checks specified in section 2.2.2.2 of appendix A of this part while the unit is in operation at normal, stable conditions.

[Former 2.1.2 removed and former 2.1.3 revised and redesignated as new 2.1.2 at 61 FR 59165, Nov. 20, 1996]

2.1.3 Recalibration

The EPA recommends adjusting the calibration, at a minimum, whenever the daily calibration error exceeds the limits of the applicable performance specification for the pollutant concentration monitor, CO_2, or O_2 monitor, or flow monitor in appendix A of this part.

[2.1.4 revised at 60 FR 26513, May 17, 1995; redesignated as new 2.1.3 at 61 FR 59165, Nov. 20, 1996]

2.1.4 Out-of-Control Period

An out-of-control period occurs when the calibration error of an SO_2 or NO_x pollutant concentration monitor exceeds 5.0 percent based upon the span value (or exceeds 10 ppm, for span values <200 ppm), when the calibration error of a diluent gas monitor exceeds 1.0 percent O_2 or CO_2, or when the calibration error of a flow monitor exceeds 6.0 percent based upon the span value, which is twice the applicable specification of Appendix A of this part. The out-of-control period begins with the hour of completion of the failed calibration error test and ends with the hour of completion following an effective recalibration. Whenever the failed calibration, corrective action, and effective recalibration occur within the same hour, the hour is not out of control if 2 or more valid readings are obtained during that hour as required by §75.10 of this part. A NO_x continuous emission monitoring system is considered out-of-control if either component monitor exceeds twice the applicable specification in Appendix A of this part.

An out-of-control period also occurs whenever interference of a flow monitor is identified. The out-of-control period begins with the hour of completion of the failed interference check and ends with the hour of completion of an interference check that is passed.

[Former 2.1.5 redesignated as new 2.1.4 at 61 FR 59165, Nov. 20, 1996]

Copyright 1993-1997, The Bureau of National Affairs, Inc.

2.1.5 Quality Assurance of Data With Respect to Daily Assessments

When a monitoring system passes a daily assessment (i.e., daily calibration error test or daily flow interference check), data from that monitoring system are prospectively validated for 26 clock hours (i.e., 24 hours plus a 2-hour grace period) beginning with the hour in which the test is passed, unless another assessment (i.e. a daily calibration error test, an interference check of a flow monitor, a quarterly linearity check, a quarterly leak check, or a relative accuracy test audit) is failed within the 26-hour period.

[2.1.5 added at 61 FR 59165, Nov. 20, 1996]

2.1.5.1 Data Invalidation with Respect to Daily Assessments. The following specific rules apply to the invalidation of data with respect to daily assessments:

(1) Data from a monitoring system are invalid beginning with the first hour following the expiration of a 26-hour data validation period or beginning with the first hour following the expiration of an 8- hour start-up grace period (as provided under section 2.1.3.2 of this appendix) if therequired subsequent daily assessment has not been conducted.

(2) Beginning on January 1, 1999, for a monitoring system that has passed the off- line calibration demonstration, if an on- line daily calibration error test of the same monitoring system is not conducted and passed within 26 unit operating hours of an off-line calibration error test that is used for data validation, then data from that monitoring system are invalid, beginning with the 27th unit operating hour following that off-line calibration error test.

[2.1.5.1 added at 61 FR 59165, Nov. 20, 1996]

2.1.5.2 Daily Assessment Start-Up Grace Period. For the purpose of quality assuring data with respect to a daily assessment (i.e. a daily calibration error test or a flow interference check), a start-up grace period may apply when a unit begins to operate after a period of non-operation. The start-up grace period for a daily calibration error test is independent of the start-up grace period for a daily flow interference check. To qualify for a start- up grace period for a daily assessment, there are two requirements:

(1) The unit must have resumed operation after being in outage for 1 or more hours (i.e., the unit must be in a start-up condition) as evidenced by a change in unit operating time from zero in one clock hour to an operating time greater than zero in the next clock hour.

(2) For the monitoring system to be used to validate data during the grace period, the previous daily assessment of the same kind must have been passed on-line within 26 clock hours prior to the last hour in which the unit operated before the outage. In addition, the monitoring system must be in-control with respect to quarterly and semi-annual or annual assessments.

If both of the above conditions are met, then a start-up grace period of up to 8 clock hours applies, beginning with the first hour of unit operation following the outage. During the start-up grace period, data generated by the monitoring system are considered quality-assured. For each monitoring system, a start-up grace period for a calibration error test or flow interference check ends when either: (1) a daily assessment of the same kind (i.e., calibration error test or flow

Copyright 1993-1997, The Bureau of National Affairs, Inc.

interference check) is performed; or (2) 8 clock hours have elapsed (starting with the first hour of unit operation following the outage), whichever occurs first.

[2.1.5.2 added at 61 FR 59165, Nov. 20, 1996]

2.1.6 Data Recording

Record and tabulate all calibration error test data according to month, day, clock-hour, and magnitude in either ppm, percent volume, or scfh. Program monitors that automatically adjust data to the corrected calibration values (e.g., microprocessor control) to record either: (1) The unadjusted concentration or flow rate measured in the calibration error test prior to resetting the calibration, or (2) the magnitude of any adjustment. Record the following applicable flow monitor interference check data: (1) Sample line/sensing port pluggage, and (2) malfunction of each RTD, transceiver, or equivalent.

2.1.7 [Reserved]

[2.1.7 added at 60 FR 26566, May 17, 1995; removed at 61 FR 59165, Nov. 20, 1996]

2.2 Quarterly Assessments

[2.2—2.3.2 revised at 60 FR 26513, May 17, 1995]

For each monitor or continuous emission monitoring system, perform the following assessments during each unit operating quarter, or for monitors or monitoring systems on bypass ducts or bypass stacks, during each bypass operating quarter to be performed not less than once every 2 calendar years. This requirement is effective as of the calendar quarter following the calendar quarter in which the monitor or continuous emission monitoring system is provisionally certified.

2.2.1 Linearity Check

Perform a linearity check for each SO_2 and NO_X pollutant concentration monitor and each CO_2 or O_2 monitor at least once during each unit operating quarter or each bypass operating quarter, in accordance with the procedures in appendix A, section 6.2 of this part. For units using emission controls and other units using a low-scale span value to determine calibration gases, perform a linearity check on both the low- and high-scales. Conduct the linearity checks no less than 2 months apart, to the extent practicable.

Copyright 1993-1997, The Bureau of National Affairs, Inc.

2.2.2 Leak Check

For differential pressure flow monitors, perform a leak check of all sample lines (a manual check is acceptable) at least once during each unit operating quarter or each bypass operating quarter. Conduct the leak checks no less than 2 months apart, to the extent practicable.

2.2.3 Out-of-Control Period

An out-of-control period occurs when the error in linearity at any of the three concentrations (six for dual range monitors) in the quarterly linearity check exceeds the applicable specification in Appendix A, section 3.2 of this part. The out- of-control period begins with the hour of the failed linearity check and ends with the hour of a satisfactory linearity check following corrective action and/or monitor repair. For the NO_x continuous emission monitoring system, the system is considered out-of-control if either of the component monitors exceed the applicable specification in Appendix A, section 3.2 of this part. An out-of-control period occurs when a flow monitor sample line leak is detected. The out-of-control period begins with the hour of the failed leak check and ends with the hour of a satisfactory leak check following corrective action.

2.3 Semiannual and Annual Assessments

For each monitor or continuous emission monitoring system, perform the following assessments once semiannually (within two calendar quarters) or once annually (within four calendar quarters) after the calendar quarter in which the monitor or monitoring system was last tested, as specified below for the type of test and the performance achieved, except as provided below in section 2.3.1 of this appendix for monitors or continuous emission monitoring systems on bypass ducts or stacks or on peaking units. This requirement is effective as of the calendar quarter, unit operating quarter (for peaking units), or bypass operating quarter (for bypass stacks or ducts) following the calendar quarter in which the monitor or continuous emission monitoring system is provisionally certified. A summary chart showing the frequency with which a relative accuracy test audit must be performed, depending on the accuracy achieved, is located at the end of this appendix in Figure 2.

2.3.1 Relative Accuracy Test Audit

Perform relative accuracy test audits semiannually and, to the extent practicable, no less than 4 months apart for each SO_2 or CO_2 pollutant concentration monitor, flow monitor, NO_X continuous emission monitoring system, or SO_2-diluent continuous emission monitoring systems used by units with a Phase I qualifying technology for the period during which the units are

Copyright 1993-1997, The Bureau of National Affairs, Inc.

required to monitor SO_2 emission removal efficiency, from January 1, 1997 through December 31, 1999, except as provided for monitors or continuous emission monitoring systems on peaking units or bypass stacks or ducts. For monitors on bypass stacks/ducts, perform relative accuracy test audits no less than once every two successive bypass operating quarters, or once every two calendar years, whichever occurs first, in accordance with the procedures in section 6.5 of Appendix A of this part. For monitors on peaking units, perform relative accuracy test audits no less than once every two successive unit operating quarters, or once every two calendar years, whichever occurs first. Audits required under this section shall be performed no less than 4 months apart, to the extent practicable. The audit frequency may be reduced, as specified below for monitors or monitoring systems which qualify for less frequent testing.

For flow monitors, one-level and three- level relative accuracy test audits shall be performed alternately (when a flow RATA is conducted semiannually), such that the three-level relative accuracy test audit is performed at least once annually. The three-level audit shall be performed at the three different operating or load levels specified in appendix A, section 6.5.2 of this part, and the one-level audit shall be performed at the normal operating or load level. Notwithstanding that requirement, relative accuracy test audits need only be performed at the normal operating or load level for monitors and continuous emission monitoring systems on peaking units and bypass stacks/ducts.

Relative accuracy test audits may be performed on an annual basis rather than on a semiannual basis (or for monitors on peaking units and bypass ducts or bypass stacks, no less than (1) once every four successive unit or bypass operating quarters, or (2) every two calendar years, whichever occurs first) under any of the following conditions: (1) The relative accuracy during the previous audit for an SO_2 or CO_2 pollutant concentration monitor (including an O_2 pollutant monitor used to measure CO_2 using the procedures in appendix F of this part), or for a NO_X or SO_2-diluent continuous emissions monitoring system is 7.5 percent or less; (2) prior to January 1, 2000, the relative accuracy during the previous audit for a flow monitor is 10.0 percent or less at each operating level tested; (3) on and after January 1, 2000, the relative accuracy during the previous audit for a flow monitor is 7.5 percent or less at each operating level tested; (4) on low flow ($\leq$10.0 fps) stacks/ducts, when the monitor mean, calculated using Equation A-7 in appendix A of this part is within $\pm$1.5 fps of the reference method mean or achieves a relative accuracy of 7.5 percent (10 percent if prior to January 1, 2000) or less during the previous audit; (5) on low SO_2 emitting units (SO_2 concentrations $\leq$250.0 ppm, or equivalent lb/mmBtu value for SO_2-diluent continuous emission monitoring systems), when the monitor mean is within $\pm$8.0 ppm (or equivalent in lb/mmBtu for SO_2-diluent continuous emission monitoring systems) of the reference method mean or achieves a relative accuracy of 7.5 percent or less during the previous audit; or (6) on low NO_X emitting units (NO_X emission rate $\leq$0.20 lb/mmBtu), when the NO_X continuous emission monitoring system achieves a relative accuracy of 7.5 percent or less or when the monitoring system mean, calculated using Equation A-7 in appendix A of this part is within $\pm$0.01 lb/mmBtu of the reference method mean.

A maximum of two relative accuracy test audit trials may be performed for the purpose of

Copyright 1993-1997, The Bureau of National Affairs, Inc.

achieving the results required to qualify for less frequent relative accuracy test audits. Whenever two trials are performed, the results of the second (later) trial must be used in calculating both the relative accuracy and bias.

[2.3.1 corrected at 58 FR 40746, July 30, 1993]

2.3.2 Out-of-Control Period

An out-of-control period occurs under any of the following conditions: (1) The relative accuracy of an SO_2, CO_2, or O_2 pollutant concentration monitor or a NO_X or SO_2-diluent continuous emission monitoring system exceeds 10.0 percent; (2) prior to January 1, 2000, the relative accuracy of a flow monitor exceeds 15.0 percent; (3) on and after January 1, 2000, the relative accuracy of a flow monitor exceeds 10.0 percent; (4) for low flow situations (≤10.0 fps), the flow monitor mean value (if applicable) exceeds ±2.0 fps of the reference method mean whenever the relative accuracy is greater than 15.0 percent for Phase I or 10 percent for Phase II; (5) for low SO_2 emitter situations, the monitor mean values exceeds ±15.0 ppm (or ± 0.03 lb/mmBtu for SO_2-diluent continuous emission monitoring systems from January 1, 1997 through December 31, 1999) of the reference method mean whenever the relative accuracy is greater than 10.0 percent; or (6) for low NO_X emitting units (NO_X emission rate ≤0.2 lb/mmBtu), the NO_X continuous emission monitoring system mean values exceed ±0.02 lb/mmBtu of the reference method mean whenever the relative accuracy is greater than 10.0 percent. For SO_2, CO_2, O_2, NO_X emission rate, and flow relative accuracy test audits performed at only one level, the out-of-control period begins with the hour of completion of the failed relative accuracy test audit and ends with the hour of completion of a satisfactory relative accuracy test audit. For a flow relative accuracy test audit at 3 operating levels, the out-of- control period begins with the hour of completion of the first failed relative accuracy test audit at any of the three operating levels, and ends with the hour of completion of a satisfactory three-level relative accuracy test audit. Failure of the bias test does not result in the system or monitor being out-of-control.

[2.3.2 corrected at 58 FR 40746, July 30, 1993]

2.3.3 Bias Adjustment Factor

If an SO_2 pollutant concentration monitor, flow monitor, or NO_x continuous emission monitoring system fails the bias test specified in Section 7.6 of Appendix A to this part, use the bias adjustment factor given in Equations A-11 and A-12 of Appendix A to this part to adjust the monitored data.

[2.3.3 added at 58 FR 40746, July 30, 1993]

Copyright 1993-1997, The Bureau of National Affairs, Inc.

2.4 Other Audits

Affected units may be subject to relative accuracy test audits at any time. If a monitor or continuous emission monitoring system fails the relative accuracy test during the audit, the monitor or continuous emission monitoring system shall be considered to be out-of-control beginning with the date and time of completion of the audit, and continuing until a successful audit test is completed following corrective action. If a monitor or monitoring system fails the bias test during an audit, use the bias adjustment factor given by Equations A-11 and A-12 in Appendix A to this part to adjust the monitored data. Apply this adjustment factor from the date and time of completion of the audit until the date and time of completion of a relative accuracy test audit that does not show bias.

Figure 1.--Quality Assurance Test Requirements

Test	QA test frequency requirements		
	Daily*(21)	Quarterly*(22)	Semiannual*(23)
Calibration Error (2 pt.).	✓		
Interference (flow).		✓	
Leak (flow).	✓		
Linearity (3 pt.).		✓	
RATA (SO_2, NO_x, CO_2)[1](24).		✓	
RATA (flow, alternating 1-load and 3-load)[2](25).		✓	

* For monitors on bypass stack/duct, bypass operating days or quarters, only
[1] Conduct annually, if monitor meets accuracy requirements to qualify for less frequen
[2] Conduct 3-load RATAs annually, if requirements to qualify for less frequent testing

[Figure 1 corrected at 58 FR 40746, July 30, 1993]

Figure 2.--Relative Accuracy Test Frequency Incentive System

RATA	Semiannually[1](26) (percent)	Annual[1](27)
SO_2	RA ≤ 10	RA ≤ 7.5% or

Copyright 1993-1997, The Bureau of National Affairs, Inc.

NO_X	RA ≤ 10	RA ≤ ±8.0 ppm.[2(28)] RA ≤ 7.5% or ±0.01 lb/mmBtu.[2(29)]
Flow (Phase I)[3(30)]	RA ≤ 15	RA ≤ 10% or ±1.5 fps.[2(31)]
Flow (Phase II)[3(32)]	RA ≤ 10	RA ≤ 7.5% or ±1.5 fps.[2(33)]
CO_2/O_2	RA ≤ 10	RA ≤ 7.5%.

[1] For monitors on bypass stack/duct, bypass operating quarters, not to exceed two cale
[2] The difference between monitor and reference method mean values; low emitters or low
[3] Conduct 3-load RATAs annually, if requirements to qualify for less frequent testing

[Figure 2 corrected at 58 FR 40746, July 30, 1993; revised at 60 FR 26513, May 17, 1995]

Appendix C to Part 75—Missing Data Estimation Procedures

1. Parametric Monitoring Procedure for Missing SO_2 Concentration or NO_X Emission Rate Data

[1 heading revised at 60 FR 26513, May 17, 1995]

1.1 Applicability

The owner or operator of any affected unit equipped with post-combustion SO_2 or NO_x emission controls and SO_2 pollutant concentration monitors and/or NO_x continuous emission monitoring systems at the inlet and outlet of the emission control system may apply to the Administrator for approval and certification of a parametric, empirical, or process simulation method or model for calculating substitute data for missing data periods. Such methods may be used to parametrically estimate the removal efficiency of the SO_2 of postcombustion NO_x emission controls which, with the monitored inlet concentration or emission rate data, may be used to estimate the average concentration of SO_2 emissions or average emission rate of NO_x discharged to the atmosphere. After approval by the Administrator, such method or model may be used to for filling in missing SO_2 concentration or NO_x emission rate data when data from the

Copyright 1993-1997, The Bureau of National Affairs, Inc.

outlet SO_2 pollutant concentration monitor or outlet NO_x continuous emission monitoring system have been reported with an annual monitor data availability of 90.0 percent or more.

Base the empirical and process simulation methods or models on the fundamental chemistry and engineering principles involved in the treatment of pollutant gas. On a case-by-case basis, the Administrator may pre-certify commercially available process simulation methods and models.

1.2 Petition Requirements

Continuously monitor, determine, and record hourly averages of the estimated SO_2 or NO_X removal efficiency and of the parameters specified below, at a minimum. The affected facility shall supply additional parametric information where appropriate. Measure the SO_2 concentration or NO_X emission rate, removal efficiency of the add-on emission controls, and the parameters for at least 2160 unit operating hours. Provide information for all expected operating conditions and removal efficiencies. At least 4 evenly spaced data points are required for a valid hourly average, except during periods of calibration, maintenance, or quality assurance activities, during which 2 data points per hour are sufficient. The Administrator will review all applications on a case-by-case basis.

[1.2 amended at 60 FR 26513, May 17, 1995]

1.2.1 Parameters for Wet Flue Gas Desulfurization System

1.2.1.1 Number of scrubber modules in operation.

1.2.1.2 Total slurry rate to each scrubber module (gal per min).

1.2.1.3 In-line absorber pH of each scrubber module.

1.2.1.4 Pressure differential across each scrubber module (inches of water column).

1.2.1.5 Unit load (MWe).

1.2.1.6 Inlet and outlet SO_2 concentration as determined by the monitor or missing data substitution procedures.

1.2.1.7 Percent solids in slurry for each scrubber module.

1.2.1.8 Any other parameters necessary to verify scrubber removal efficiency, if the Administrator determines the parameters above are not sufficient.

1.2.2 Parameters for Dry Flue Gas Desulfurization System

1.2.2.1 Number of scrubber modules in operation.

1.2.2.2 Atomizer slurry flow rate to each scrubber module (gal per min).

1.2.2.3 Inlet and outlet temperature for each scrubber module (°F).

1.2.2.4 Pressure differential across each scrubber module (inches of water column).

1.2.2.5 Unit load (MWe).

1.2.2.6 Inlet and outlet SO_2 concentration as determined by the monitor or missing data substitution procedures.

1.2.2.7 Any other parameters necessary to verify scrubber removal efficiency, if the Administrator determines the parameters above are not sufficient.

Copyright 1993-1997, The Bureau of National Affairs, Inc.

1.2.3 Parameters for Other Flue Gas Desulfurization Systems

If SO_2 control technologies other than wet or dry lime or limestone scrubbing are selected for flue gas desulfurization, a corresponding empirical correlation or process simulation parametric method using appropriate parameters may be developed by the owner or operator of the affected unit, and then reviewed and approved or modified by the Administrator on a case- by-case basis.

1.2.4 Parameters for Post-Combustion NO_x Emission Controls

1.2.4.1 Inlet air flow rate to the unit (boiler) (mcf/hr).
1.2.4.2 Excess oxygen concentration of flue gas at stack outlet (percent).
1.2.4.3 Carbon monoxide concentration of flue gas at stack outlet (ppm).
1.2.4.4 Temperature of flue gas at outlet of the unit (°F).
1.2.4.5 Inlet and outlet NO_x emission rate as determined by the NO_x continuous emission monitoring system or missing data substitution procedures.
1.2.4.6 [Deleted]

[Deleted at 58 FR 34126, June 23, 1993]

1.3 Correlation of Emissions With Parameters

Establish a method for correlating hourly averages of the parameters identified above with the percent removal efficiency of the SO_2 or post-combustion NO_X emission controls under varying unit operating loads. Equations 1-7 in §75.15 may be used to estimate the percent removal efficiency of the SO_2 emission controls on an hourly basis.

[1.3 amended revised at 60 FR 26513, May 17, 1995]
Each parametric data substitution procedure should develop a data correlation procedure to verify the performance of the SO_2 emission controls or post-combustion NO_x emission controls, along with the SO_2 pollutant concentration monitor and NO_x continuous emission monitoring system values for varying unit load ranges.
For NO_x emission rate data, and wherever the performance of the emission controls varies with the load, use the load range procedure provided in section 2.2 of this appendix.

1.4 Calculations

1.4.1 Use the following equation to calculate substitute data for filling in missing (outlet) SO_2

Copyright 1993-1997, The Bureau of National Affairs, Inc.

pollutant concentration monitor data.

$M_o = I_c (1-E)$

(Eq. C-1)

where,

M_o = Substitute data for outlet SO_2 concentration, ppm.

I_c = Recorded inlet SO_2 concentration, ppm.

E = Removal efficiency of SO_2 emission controls as determined by the correlation procedure described in section 1.3 of this appendix.

[1.4.1 corrected at 58 FR 40746, July 30, 1993]

1.4.2 Use the following equation to calculate substitute data for filling in missing (outlet) NO_x emission rate data.

$M_o = I_c (1-E)$

(Eq. C-2)

where,

M_o = Substitute data for outlet NO_x emission rate, lb/mmBtu.

I_c = Recorded inlet NO_x emission rate, lb/mmBtu.

E = Removal efficiency of post-combustion NO_x emission controls determined by the correlation procedure described in section 1.3 of this appendix.

[1.4.2 corrected at 58 FR 40746, July 30, 1993]

1.5 Missing Data

1.5.1 If both the inlet and the outlet SO_2 pollutant concentration monitors are unavailable simultaneously, use the maximum inlet SO_2 concentration recorded by the inlet SO_2 pollutant concentration monitor during the previous 720 quality assured monitor operating hours to substitute for the inlet SO_2 concentration in Equation C-1 of this appendix.

1.5.2 If both the inlet and outlet NO_x continuous emission monitoring systems are unavailable simultaneously, use the maximum inlet NO_x emission rate for the corresponding unit load recorded by the NO_x continuous emission monitoring system at the inlet during the previous 2160 quality assured monitor operating hours to substitute for the inlet NO_x emission rate in Equation C-2 of this Appendix.

1.6 Application

Apply to the Administrator for approval and certification of the parametric substitution procedure for filling in missing SO_2 concentration or NO_x emission rate data using the established

Copyright 1993-1997, The Bureau of National Affairs, Inc.

criteria and information identified above. DO not use this procedure until approved by the Administrator.

2. Load-Based Procedure for Missing Flow Rate and NO_x Emission Rate Data

2.1 Applicability

This procedure is applicable for data from all affected units for use in accordance with the provisions of this part to provide substitute data for volumetric flow (scfh) and NO_x emission rate (in lb/mmBtu).

2.2 Procedure

2.2.1 For a single unit, establish 10 operating load ranges defined in terms of percent of the maximum hourly gross load of the unit, in gross megawatts (MWge), as shown in Table C-1. For units sharing a common stack monitored with a single flow monitor, the load ranges for flow (but not for NO_X) may be broken down into 20 equally-sized operating load ranges in increments of 5 percent of the combined maximum hourly gross load of all units utilizing the common stack. For a cogenerating unit or other unit at which some portion of the heat input is not used to produce electricity or for a unit for which hourly gross load in MWge is not recorded separately, use the hourly gross steam load of the unit, in pounds of steam per hour at the measured temperature (°F) and pressure (psia) instead of MWge. Indicate a change in the number of load ranges or the units of loads to be used in the precertification section of the monitoring plan.

[2.2.1 corrected at 58 FR 40746, July 30, 1993; revised at 60 FR 26513, May 17, 1995]

Table C-1.--Definition of Operating Load Ranges for Load-Based Substitution Data Procedures

Operating load range	Percent of maximum hourly gross load (%)
1	0-10
2	10-20
3	20-30
4	30-40
5	40-50
6	50-60
7	60-70
8	70-80

Copyright 1993-1997, The Bureau of National Affairs, Inc.

9	80-90
10	90-100

[Table C-1 corrected at 58 FR 34126, June 23, 1993; revised at 60 FR 26513, May 17, 1995]

2.2.2 Beginning with the first hour of unit operation after installation and certification of the flow monitor or the NO_x continuous emission monitoring system, for each hour of unit operation record a number, 1 through 10, (or 1 through 20 for flow at common stacks) that identifies the operating load range corresponding to the integrated hourly gross load of the unit(s) recorded for each unit operating hour.

2.2.3 Beginning with the first hour of unit operation after installation and certification of the flow monitor or the NO_X continuous emission monitoring system and continuing thereafter, the data acquisition and handling system must be capable of calculating and recording the following information for each unit operating hour of missing flow or NO_X data within each identified load range during the shorter of: (1) the previous 2,160 quality assured monitor operating hours (on a rolling basis), or (2) all previous quality assured monitor operating hours.

[2.2.3 amended at 60 FR 26513, May 17, 1995]

2.2.3.1 Average of the hourly flow rates reported by a flow monitor, in scfh.

[2.2.3.1 amended at 60 FR 26513, May 17, 1995]

2.2.3.2 The 90th percentile value of hourly flow rates, in scfh.

2.2.3.3 The 95th percentile value of hourly flow rates, in scfh.

2.2.3.4 The maximum value of hourly flow rates, in scfh.

2.2.3.5 Average of the hourly NO_X emission rate, in lb/mmBtu, reported by a NO_X continuous emission monitoring system.

[2.2.3.5 amended at 60 FR 26513, May 17, 1995]

2.2.3.6 The 90th percentile value of hourly NO_x emission rates, in lb/mmBtu.

2.2.3.7 The 95th percentile value of hourly NO_x emission rates, in lb/mmBtu.

2.2.3.8 The maximum value of hourly NO_x emission rates, in lb/mmBtu.

2.2.4 Calculate all monitor or continuous emission monitoring system data averages, maximum values, and percentile values determined by this procedure using bias adjusted values in the load ranges.

2.2.5 When a bias adjustment is necessary for the flow monitor and/or the NO_X continuous emission monitoring system, apply the adjustment factor to all monitor or continuous emission monitoring system data values placed in the load ranges.

[2.2.5 amended at 60 FR 26513, May 17, 1995]

2.2.6 Use the calculated monitor or monitoring system data averages, maximum values, and percentile values to substitute for missing flow rate and NO_x emission rate data according to the

Copyright 1993-1997, The Bureau of National Affairs, Inc.

procedures in subpart D of this part.

Appendix D to Part 75— Optional SO_2 Emissions Data Protocol for Gas-Fired and Oil-Fired Units

1. Applicability

1.1 This protocol may be used in lieu of continuous SO_2 pollutant concentration and flow monitors for the purpose of determining hourly SO_2 emissions and heat input from: (1) gas-fired units as defined in §72.2 of this chapter; or (2) oil-fired units as defined in §72.2 of this chapter. This optional SO_2 emissions data protocol contains procedures for conducting oil sampling and analysis in section 2.2 of this appendix; the procedures for flow proportional oil sampling and the procedures for manual daily oil sampling may be used for any gas-fired unit or oil-fired unit. In addition, this optional SO_2 emissions data protocol contains two procedures for determining SO_2 emissions due to the combustion of gaseous fuels; these two procedures may be used for any gas-fired unit or oil-fired unit.

[1.1 amended at 60 FR 26513, May 17, 1995]

1.2 Pursuant to the procedures in §75.20, complete all testing requirements to certify use of this protocol in lieu of a flow monitor and an SO_2 continuous emission monitoring system. Complete all testing requirements no later than the applicable deadline specified in §75.4. Apply to the Administrator for initial certification to use this protocol no later than 45 days after the completion of all certification tests. Whenever the monitoring method is to be changed, reapply to the Administrator for recertification of the new monitoring method.

[Former 1.2 removed, 1.3 revised and redesignated as new 1.2 at 60 FR 26513, May 17, 1995]

1.4 [Removed]

[1.4 removed at 60 FR 26513, May 17, 1995]

2. Procedure

[Section 2 revised at 60 FR 26513, May 17, 1995]

2.1 Flowmeter Measurements

For each hour when the unit is combusting fuel, measure and record the flow of fuel combusted by the unit, except as provided for gas in section 2.1.4 of this appendix. Measure the flow of fuel with an in-line fuel flowmeter and automatically record the data with a data acquisition and

Copyright 1993-1997, The Bureau of National Affairs, Inc.

handling system, except as provided in section 2.1.4 of this appendix.

2.1.1 Measure the flow of each fuel entering and being combusted by the unit. If a portion of the flow is diverted from the unit without being burned, and that diversion occurs downstream of the fuel flowmeter, an additional in-line fuel flowmeter is required to account for the unburned fuel. Record the flow of each fuel combusted by the unit as the difference between the flow measured in the pipe leading to the unit and the flow in the pipe diverting fuel away from the unit.

[2.1.1 corrected at 58 FR 40746, July 30, 1993]

2.1.2 Install and use fuel flowmeters meeting the requirements of this appendix in a pipe going to each unit, or install and use a fuel flowmeter in a common pipe header (i.e., a pipe carrying fuel for multiple units). If the flowmeter is installed in a common pipe header, do one of the following:

2.1.2.1 Measure the fuel flow in the common pipe and combine SO_2 mass emissions for the affected units for recordkeeping and compliance purposes; or

2.1.2.2 Provide information satisfactory to the Administrator on methods for apportioning SO_2 mass emissions and heat input to each of the affected units demonstrating that the method ensures complete and accurate accounting of all emissions regulated under this part. The information shall be provided to the Administrator through a petition submitted by the designated representative under §75.66. Satisfactory information includes apportionment using fuel flow measurements, the ratio of load (in MWe) in each unit to the total load for all units receiving fuel from the common pipe header, or the ratio of steam flow (in 1000 lb/hr) at each unit to the total steam flow for all units receiving fuel from the common pipe header.

2.1.3 For a gas-fired unit or an oil-fired unit that continuously or frequently combusts a supplemental fuel for flame stabilization or safety purposes, measure the flow of the supplemental fuel with a fuel flowmeter meeting the requirements of this appendix.

2.1.4 For an oil-fired unit that uses gas solely for start-up or burner ignition or a gas-fired unit that uses oil solely for start- up or burner ignition a flowmeter for the start-up fuel is not required. Estimate the volume of oil combusted for each start-up or ignition, either by using a fuel flowmeter or by using the dimensions of the storage container and measuring the depth of the fuel in the storage container before and after each start-up or ignition. A fuel flowmeter used solely for start-up or ignition fuel is not subject to the calibration requirements of section 2.1.5 and 2.1.6 of this appendix. Gas combusted solely for start-up or burner ignition does not need to be measured separately.

2.1.5 Each fuel flowmeter used to meet the requirements of this protocol shall meet a flowmeter accuracy of ±2.0 percent of the upper range value (i.e, maximum calibrated fuel flow rate), either by design or as calibrated and as measured under laboratory conditions by the manufacturer, by an independent laboratory, or by the owner or operator. The flowmeter accuracy must include all error from all parts of the fuel flowmeter being calibrated based upon the contribution to the error in the flowrate.

2.1.5.1 Use the procedures in the following standards for flowmeter calibration or flowmeter design, as appropriate to the type of flowmeter: ASME MFC-3M-1989 with September 1990 Errata ("Measurement of Fluid Flow in Pipes Using Orifice, Nozzle, and Venturi"), ASME MFC-4M-1986 (Reaffirmed 1990), "Measurement of Gas Flow by Turbine Meters," American

Copyright 1993-1997, The Bureau of National Affairs, Inc.

Gas Association Report No. 3, "Orifice Metering of Natural Gas and Other Related Hydrocarbon Fluids Part 1: General Equations and Uncertainty Guidelines" (October 1990 Edition), Part 2: "Specification and Installation Requirements" (February 1991 Edition) and Part 3: "Natural Gas Applications" (August 1992 edition), (excluding the modified flow-calculation method in Part 3), Section 8, Calibration from American Gas Association Transmission Measurement Committee Report No. 7: Measurement of Gas by Turbine Meters (1985 Edition), ASME MFC-5M-1985 ("Measurement of Liquid Flow in Closed Conduits Using Transit-Time Ultrasonic Flowmeters"), ASME MFC-6M-1987 with June 1987 Errata ("Measurement of Fluid Flow in Pipes Using Vortex Flow Meters"), ASME MFC-7M-1987 (Reaffirmed 1992), "Measurement of Gas Flow by Means of Critical Flow Venturi Nozzles," ISO 8316: 1987(E) "Measurement of Liquid Flow in Closed Conduits—Method by Collection of the Liquid in a Volumetric Tank," or MFC-9M-1988 with December 1989 Errata ("Measurement of Liquid Flow in Closed Conduits by Weighing Method") for all other flow meter types (incorporated by reference under §75.6 of this part). The Administrator may also approve other procedures that use equipment traceable to National Institute of Standards and Technology standards. Document other procedures, the equipment used, and the accuracy of the procedures in the monitoring plan for the unit and a petition submitted by the designated representative under §75.66(c). If the flowmeter accuracy exceeds ±2.0 percent of the upper range value, the flowmeter does not qualify for use under this part.

[2.1.5.1 revised at 61 FR 59166, Nov. 20, 1996]

2.1.5.2 Alternatively, a fuel flowmeter used for the purposes of this part may be calibrated or recalibrated at least annually (or, for fuel flowmeters measuring emergency fuel, backup fuel or fuel usage of peaking units, every four calendar quarters when the unit combusts the fuel measured by the fuel flowmeter) by comparing the measured flow of a flowmeter to the measured flow from another flowmeter which has been calibrated or recalibrated during the previous 365 days using a standard listed in section 2.1.5 of this appendix or other procedure approved by the Administrator under §75.66. Any secondary elements, such as pressure and temperature transmitters, must be calibrated immediately prior to the comparison. Perform the comparison over a period of no more than seven consecutive unit operating days. Compare the average of three fuel flow readings for each meter at each of three different flow levels, corresponding to (1) normal full operating load, (2) normal minimum operating load, and (3) a load point approximately equally spaced between the full and minimum operating loads. Calculate the flowmeter accuracy at each of the three flow levels using the following equation:

$$ACC = \frac{|R - A|}{URV} \times 100 \qquad \text{(Eq. D-1)}$$

Where:

ACC=Flow meter accuracy as a percentage of the upper range value, including all error from all parts of both flowmeters.

R=Average of the three flow measurements of the reference flow meter.

Copyright 1993-1997, The Bureau of National Affairs, Inc.

A=Average of the three measurements of the flow meter being tested.

URV=Upper range value of fuel flow meter being tested (i.e. maximum measurable flow).

If the flow meter accuracy exceeds ±2.0 percent of the upper range value at any of the three flow levels, either recalibrate the flow meter until the accuracy is within the performance specification, or replace the flow meter with another one that is within the performance specification. Notwithstanding the requirement for annual calibration of the reference flowmeter, if a reference flowmeter and the flowmeter being tested are within ±1.0 percent of the flowrate of each other during all in-place calibrations in a calendar year, then the reference flowmeter does not need to be calibrated before the next in-place calibration. This exception to calibration requirements for the reference flowmeter may be extended for periods up to five calendar years.

[2.1.5.2 amended at 61 FR 25585, May 22, 1996]

2.1.6 Quality Assurance

2.1.6.1 Recalibrate each fuel flowmeter to a flowmeter accuracy of ±2.0 percent of the upper range value prior to use under this part at least annually (or, for fuel flowmeters measuring emergency fuel, backup fuel or fuel usage of peaking units, every four calendar quarters when the unit combusts the fuel measured by the fuel flowmeter), or more frequently if required by manufacturer specifications. Perform the recalibration using the procedures in section 2.1.5 of this appendix. For orifice-, nozzle-, and venturi-type flowmeters, also recalibrate the flowmeter the following calendar quarter using the procedures in section 2.1.6.2 of this appendix, whenever the fuel flowmeter accuracy during a calibration or test is greater than ±1.0 percent of the upper range value, or whenever a visual inspection of the orifice, nozzle, or venturi identifies corrosion since the previous visual inspection.

[2.1.6.1 amended at 61 FR 25585, May 22, 1996]

2.1.6.2 For orifice-, nozzle-, and venturi-type flowmeters that are designed according to the standards in section 2.1.5 of this appendix, satisfy the calibration requirements of this appendix by calibrating the differential pressure transmitter or transducer, static pressure transmitter or transducer, and temperature transmitter or transducer, as applicable, using equipment that has a current certificate of traceability to NIST standards. In addition, conduct a visual inspection of the orifice, nozzle, or venturi at least annually.

2.2 Oil Sampling and Analysis

Perform sampling and analysis of as- fired oil to determine the percentage of sulfur by weight in the oil.

2.2.1 When combusting diesel fuel, sample the diesel fuel either (1) every day the unit combusts diesel fuel, or (2) upon receipt of a shipment of diesel fuel.

2.2.1.1 If the diesel fuel is sampled every day, use either the flow proportional method described

Copyright 1993-1997, The Bureau of National Affairs, Inc.

in section 2.2.3 of this appendix or the daily manual method described in section 2.2.4 of this appendix.

2.2.1.2 If the diesel fuel is sampled upon delivery, calculate SO_2 emissions using the highest sulfur content of any oil supply combusted in the previous 30 days that the unit combusted oil. Diesel fuel sampling and analysis may be performed either by the owner or operator of an affected unit, an outside laboratory, or a fuel supplier, provided that sampling is performed according to ASTM D4057-88, "Standard Practice for Manual Sampling of Petroleum and Petroleum Products" (incorporated by reference under §75.6 of this part).

2.2.2 Perform oil sampling every day the unit is combusting oil except as provided for diesel fuel. Use either the flow proportional method described in section 2.2.3 of this appendix or the daily manual method described in section 2.2.4 of this appendix.

2.2.3 Conduct flow proportional oil sampling or continuous drip oil sampling in accordance with ASTM D4177-82 (Reapproved 1990), "Standard Practice for Automatic Sampling of Petroleum and Petroleum Products" (incorporated by reference under §75.6), every day the unit is combusting oil. Extract oil at least once every hour and blend into a daily composite sample. The sample composite period may not exceed 24 hr.

2.2.4 Representative as-fired oil samples may be taken manually every day that the unit combusts oil according to ASTM D4057-88, "Standard Practice for Manual Sampling of Petroleum and Petroleum Products" (incorporated by reference under §75.6), provided that the highest fuel sulfur content recorded at that unit from the most recent 30 daily samples is used for the purposes of calculating SO_2 emissions under section 3 of this appendix. Use the gross calorific value measured from that day's sample to calculate heat input. If oil supplies with different sulfur contents are combusted on the same day, sample the highest sulfur fuel combusted that day.

Note: For units with pressurized fuel flow lines such as some diesel and dual- fuel reciprocating internal combustion engine units, a manual sample may be taken from the point closest to the unit where it is safe to take a sample (including back to the oil tank), rather than just prior to entry to the boiler or combustion chamber. As-delivered manual samples of diesel fuel need not be as-fired.

2.2.5 Split and label each oil sample. Maintain a portion (at least 200 cc) of each sample throughout the calendar year and in all cases for not less than 90 calendar days after the end of the calendar year allowance accounting period. Analyze oil samples for percent sulfur content by weight in accordance with ASTM D129-91, "Standard Test Method for Sulfur in Petroleum Products (General Bomb Method)," ASTM D1552-90, "Standard Test Method for Sulfur in Petroleum Products (High Temperature Method)," ASTM D2622-92, "Standard Test Method for Sulfur in Petroleum Products by X-Ray Spectrometry," or ASTM D4294-90, "Standard Test Method for Sulfur in Petroleum Products by Energy-Dispersive X-Ray Fluorescence Spectroscopy" (incorporated by reference under §75.6).

2.2.6 Where the flowmeter records volumetric flow rather than mass flow, analyze oil samples to determine the density or specific gravity of the oil. Determine the density or specific gravity of the oil sample in accordance with ASTM D287-82 (Reapproved 1991), "Standard Test Method for API Gravity of Crude Petroleum and Petroleum Products (Hydrometer Method)," ASTM

Copyright 1993-1997, The Bureau of National Affairs, Inc.

D941-88, "Standard Test Method for Density and Relative Density (Specific Gravity) of Liquids by Lipkin Bicapillary Pycnometer," ASTM D1217-91, "Standard Test Method for Density and Relative Density (Specific Gravity) of Liquids by Bingham Pycnometer," ASTM D1481-91, "Standard Test Method for Density and Relative Density (Specific Gravity) of Viscous Materials by Lipkin Bicapillary," ASTM D1480-91, "Standard Test Method for Density and Relative Density (Specific Gravity) of Viscous Materials by Bingham Pycnometer," ASTM D1298-85 (Reapproved 1990), "Standard Practice for Density, Relative Density (Specific Gravity) or API Gravity of Crude Petroleum and Liquid Petroleum Products by Hydrometer Method," or ASTM D4052-91, "Standard Test Method for Density and Relative Density of Liquids by Digital Density Meter" (incorporated by reference under §75.6).

[2.2.6 corrected at 58 FR 40746, July 30, 1993]

2.2.7 Analyze oil samples to determine the heat content of the fuel. Determine oil heat content in accordance with ASTM D240-87 (Reapproved 1991), "Standard Test Method for Heat of Combustion of Liquid Hydrocarbon Fuels by Bomb Calorimeter," ASTM D2382-88, "Standard Test Method for Heat or Combustion of Hydrocarbon Fuels by Bomb Calorimeter (High-Precision Method)", or ASTM D2015-91, "Standard Test Method for Gross Calorific Value of Coal and Coke by the Adiabatic Bomb Calorimeter" (incorporated by reference under §75.6) or any other procedures listed in section 5.5 of appendix F of this part.

[Corrected at 58 FR 34126, June 23, 1993]

2.2.8 Results from the oil sample analysis must be available no later than thirty calendar days after the sample is composited or taken. However, during an audit, the Administrator may require that the results of the analysis be available within 5 business days, or sooner if practicable.

2.3 SO_2 Emissions from Combustion of Gaseous Fuels

Account for the hourly SO_2 mass emissions due to combustion of gaseous fuels for each day when gaseous fuels are combusted by the unit using the procedures in either section 2.3.1 or 2.3.2.

2.3.1 Sample the gaseous fuel daily.

2.3.1.1 Analyze the sulfur content of the gaseous fuel in grain/100 scf using ASTM D1072-90, "Standard Test Method for Total Sulfur in Fuel Gases", ASTM D4468-85 (Reapproved 1989) "Standard Test Method for Total Sulfur in Gaseous Fuels by Hydrogenolysis and Rateometric Colorimetry," ASTM D5504-94 "Standard Test Method for Determination of Sulfur Compounds in Natural Gas and Gaseous Fuels by Gas Chromatography and Chemiluminescence," or ASTM D3246-81 (Reapproved 1987) "Standard Test Method for Sulfur in Petroleum Gas By Oxidative Microcoulometry" (incorporated by reference under §75.6). The test may be performed by the owner or operator, an outside laboratory, or the gas supplier.

2.3.1.2 Results from the analysis must be available on-site no later than thirty calendar days after the sample is taken.

Copyright 1993-1997, The Bureau of National Affairs, Inc.

2.3.1.3 Determine the heat content or gross calorific value for at least one sample each month and use the procedures of section 5.5 of appendix F of this part to determine the heat input for each hour the unit combusted gaseous fuel.

2.3.1.4 Multiply the sulfur content by the hourly metered volume of gas combusted in 100 scf, using Equation D-4 of this appendix.

2.3.2 If the fuel is pipeline natural gas, calculate SO_2 emissions using a default SO_2 emission rate of 0.0006 lb/mmBtu.

2.3.2.1 Use the default SO_2 emission rate of 0.0006 lb/mmBtu and the hourly heat input from pipeline natural gas in mmBtu/hr, as determined using the procedures in section 5.5 of appendix F of this part. Calculate SO_2 emissions using Equation D-5 of this appendix.

2.3.2.2 Provide information on the contractual sulfur content from the pipeline gas supplier in the monitoring plan for the unit, demonstrating that the gas has a hydrogen sulfide content of 1 grain/100 scf or less, and a total sulfur content of 20 grain/100 scf or less.

2.4 Missing Data Procedures.

When data from the procedures of this part are not available, provide substitute data using the following procedures.

2.4.1 When sulfur content or oil density data from the analysis of an oil sample or when sulfur content data from the analysis of a gaseous fuel sample are missing or invalid, substitute, as applicable, the highest measured sulfur content or oil density (if using a volumetric oil flowmeter) recorded during the previous 30 days when the unit burned that fuel. If no previous sulfur content data are available, substitute the maximum potential sulfur content of that fuel.

2.4.2 When gross calorific value data from the analysis of an oil sample are missing or invalid, substitute the highest measured gross calorific value recorded during the previous 30 days that the unit burned oil. When gross calorific value data from the analysis of a monthly gaseous fuel sample are missing or invalid, substitute the highest measured gross calorific value recorded during the previous three months that the unit burned gaseous fuel.

2.4.3 Whenever data are missing from any fuel flowmeter that is part of an excepted monitoring system under appendix D or E of this part, where the fuel flowmeter data are required to determine the amount of fuel combusted by the unit, use the procedures in either section 2.4.3.1 or sections 2.4.3.2 and 2.4.3.3 prior to January 1, 1996 and use the procedures in sections 2.4.3.2 and 2.4.3.3 but do not use the procedures in section 2.4.3.1 on or after January 1, 1996 to account for the flow rate of fuel combusted at the unit for each hour during the missing data period.

2.4.3.1 When data from the fuel flowmeter are missing, substitute for each hour in the missing data period the average hourly oil flow rate measured and recorded by the fuel flowmeter at the closest unit load (in MWe) greater than the load recorded for the missing data period for which oil flow rate data are available during the previous 720 hours during which the unit combusted oil. If no oil flow rate data are available at a load greater than the load recorded during the missing data

Copyright 1993-1997, The Bureau of National Affairs, Inc.

period, substitute the maximum flow rate that the flowmeter can measure.

2.4.3.2 For hours where only one fuel is combusted, substitute for each hour in the missing data period the average of the hourly fuel flow rate(s) measured and recorded by the fuel flowmeter (or flowmeters, where fuel is recirculated) at the corresponding operating unit load range recorded for each missing hour during the previous 720 hours during which the unit combusted that same fuel only. Establish load ranges for the unit using the procedures of section 2 in appendix C of this part for missing volumetric flow rate data. If no fuel flow rate data are available at the corresponding load range, use data from the next higher load range where data are available. If no fuel flow rate data are available at either the corresponding load range or a higher load range during any hour of the missing data period for that fuel, substitute the maximum potential fuel flow rate. The maximum potential fuel flow rate is the lesser of the following: (1) the maximum fuel flow rate the unit is capable of combusting or (2) the maximum flow rate that the flowmeter can measure.

2.4.3.3 For hours where two or more fuels are combusted, substitute the maximum hourly fuel flow rate measured and recorded by the flowmeter (or flowmeters, where fuel is recirculated) for the fuel for which data are missing at the corresponding load range recorded for each missing hour during the previous 720 hours when the unit combusted that fuel with any other fuel. For hours where no previous recorded fuel flow rate data are available for that fuel during the missing data period, calculate and substitute the maximum potential flow rate of that fuel for the unit as defined in section 2.4.3.2 of this appendix.

2.4.4. In any case where the missing data provisions of this section require substitution of data measured and recorded more than three years (26,280 clock hours) prior to the date and time of the missing data period, use three years (26,280 clock hours) in place of the prescribed lookback period.

3. Calculations

Use the calculation procedures in section 3.1 of this appendix to calculate SO_2 mass emissions. Where an oil flowmeter records volumetric flow, use the calculation procedures in section 3.2 of this appendix to calculate mass flow of oil. Calculate hourly SO_2 mass emissions from gaseous fuel using the procedures in section 3.3 of this appendix. Calculate hourly heat input for oil and for gaseous fuel using the equations in section 5.5 of Appendix F of this part. Calculate total SO_2 mass emissions and heat input as provided under section 3.4 of this appendix.

[3. introductory text revised at 60 FR 26513, May 17, 1995]

3.1 SO_2 Mass Emissions Calculation for Oil

[3.1 heading amended at 60 FR 26513, May 17, 1995]

Copyright 1993-1997, The Bureau of National Affairs, Inc.

3.1.1 Use the following equation to calculate SO_2 mass emissions per hour (in lb/hr.)

$M_{so2}=2.0\times M_{oil}\times \%S_{oil}/100.0$

(Eq. D-2)

where,

M_{SO2}=Hourly mass of SO_2 emitted from combustion of oil, lb/hr.

M_{oil}=Mass of oil consumed per hr, lb/hr.

$\%S_{oil}$=Percentage of sulfur by weight measured in the sample.

2.0=Ratio of lb SO_2/lb S.

[3.1.1 corrected at 58 FR 40746, July 30, 1993; amended at 60 FR 26513, May 17, 1995]

3.1.2 Record the SO_2 mass emissions from oil for each hour that oil is combusted.

[3.1.2 amended at 60 FR 26513, May 17, 1995]

3.2 Mass Flow Calculation for Oil Using Volumetric Flow

[3.2 heading revised at 60 FR 26513, May 17, 1995]

3.2.1 Where the oil flowmeter records volumetric flow rather than mass flow, calculate and record the oil mass flow for each hourly period using hourly oil flow measurements and the density or specific gravity of the oil sample.

[3.2.1 amended at 60 FR 26513, May 17, 1995]

3.2.2 Convert density, specific gravity, or API gravity of the oil sample to density of the oil sample at the sampling location's temperature using ASTM D1250- 80 (Reapproved 1990), "Standard Guide for Petroleum Measurement Tables" (incorporated by reference under §75.6 of this part).

3.2.3 Where density of the oil is determined by the applicable ASTM procedures from section 2.2.5 of this appendix, use the following equation to calculate the mass of oil consumed (in lb/hr).

$M_{oil}=V_{oil}\times D_{oil}$

(Eq. D-3)

where,

M_{oil}=Mass of oil consumed per hr, lb/hr.

V_{oil}=Volume of oil consumed per hr, measured in scf, gal, barrels, or m^3.

D_{oil}=Density of oil, measured in lb/scf, lb/gal, lb/barrel, or lb/m^3.

[Appendix D 3.2.3 corrected at 58 FR 40746, July 30, 1993]

3.2.4 Calculate the hourly heat input to the unit from oil (mmBtu) by multiplying the heat content of the daily oil sample by the hourly oil mass.

[3.3—3.4 added at 60 FR 26513, May 17, 1995]

Copyright 1993-1997, The Bureau of National Affairs, Inc.

3.3 SO_2 Mass Emissions Calculation for Gaseous Fuels

3.3.1 Use the following equation to calculate the SO_2 emissions using the gas sampling and analysis procedures in section 2.3.1 of this appendix:

$$M_{SO_2g} = \left(\frac{2.0}{7000}\right) \times Q_g \times S_g \quad \text{(Eq. D-4)}$$

Where:

M_{SO2g}=Hourly mass of SO_2 emitted-due to combustion of gaseous fuel, lb/hr.

Q_g=Hourly metered flow or amount of gaseous fuel combusted, 100 scf/hr.

S_g=Sulfur content of gaseous fuel, in grain/100 scf.

2.0=Ratio of lb SO_2/lb S.

7000=Conversion of grains/100 scf to lb/100 scf.

3.3.2 Use the following equation to calculate the SO_2 emissions using the 0.0006 lb/mmBtu emission rate in section 2.3.2 of this appendix:

$$M_{SO_2g} = ER \times HI_g \quad \text{(Eq. D-5)}$$

Where:

M_{SO2g}=Hourly mass of SO_2 emissions from combustion of pipeline natural gas, lb/hr.

ER=SO_2 emission rate of 0.0006 lb/mmBtu for pipeline natural gas.

HI_g=Hourly heat input of pipeline natural gas, calculated using procedures in appendix F of this part, in mmBtu/hr.

3.3.3 Record the SO_2 mass emissions for each hour when the unit combusts gaseous fuel.

3.4 Records and Reports

Calculate and record quarterly and cumulative SO_2 mass emissions and heat input for each calendar quarter and for the calendar year by summing the hourly values. Calculate and record SO_2 emissions and heat input data using a data acquisition and handling system. Report these data in a standard electronic format specified by the Administrator.

Appendix E to Part 75—Optional NO_x Emissions Estimation Protocol for Gas-Fired Peaking Units and Oil- Fired Peaking Units

Copyright 1993-1997, The Bureau of National Affairs, Inc.

1. Applicability

1.1 Unit Operation Requirements

This NO_X emissions estimation procedure may be used in lieu of a continuous NO_X emission monitoring system (lb/mmBtu) for determining the average NO_X emission rate and hourly NO_X rate from gas-fired peaking units and oil-fired peaking units as defined in §72.2 of this chapter. If a unit's operations exceed the levels required to be a peaking unit, install and certify a continuous NO_X emission monitoring system no later than December 31 of the following calendar year. The provisions of §75.12 apply to excepted monitoring systems under this appendix.

[1.1 amended at 60 FR 26513, May 17, 1995]

1.2 Certification

[Former 1.2 removed and former 1.3 revised and redesignated as new 1.2 at 60 FR 26513, May 17, 1995]

1.2.1 Pursuant to the procedures in §75.20, complete all testing requirements to certify use of this protocol in lieu of a NO_X continuous emission monitoring system no later than the applicable deadline specified in §75.4. Apply to the Administrator for certification to use this method no later than 45 days after the completion of all certification testing. Whenever the monitoring method is to be changed, reapply to the Administrator for certifification of the new monitoring method.

[1.3.1 corrected at 58 FR 40746, July 30, 1993; revised and redesignated as 1.2.1 at 60 FR 26513, May 17, 1995]

1.2.2 If the owner or operator has already successfully completed certification testing of the unit using the protocol of appendix E of part 75 and submitted a certification application under §75.20(g) prior to ____ July 17, 1995, the unit's monitoring system does not need to repeat initial certification testing using the revised procedures published ____ May 17, 1995.

[Former 1.3.2 revised and redesignated as 1.2.2 at 60 FR 26513, May 17, 1995]

2. Procedure

Copyright 1993-1997, The Bureau of National Affairs, Inc.

2.1 Initial Performance Testing

Use the following procedures for: measuring NO_X emission rates at heat input rate levels corresponding to different load levels; measuring heat input rate; and plotting the correlation between heat input rate and NO_X emission rate, in order to determine the emission rate of the unit(s).

[2.1 revised at 60 FR 26513, May 17, 1995]

2.1.1 Load Selection

Establish at least four approximately equally spaced operating load points, ranging from the maximum operating load to the minimum operating load. Select the maximum and minimum operating load from the operating history of the unit during the most recent two years. (If projections indicate that the unit's maximum or minimum operating load during the next five years will be significantly different from the most recent two years, select the maximum and minimum operating load based on the projected dispatched load of the unit.) For new gas- fired peaking units or new oil-fired peaking units, select the maximum and minimum operating load from the expected maximum and minimum load to be dispatched to the unit in the first five calendar years of operation.

[2.1.1 revised at 60 FR 26513, May 17, 1995]

2.1.2 NO_X and O_2 Concentration Measurements

Use the following procedures to measure NO_X and O_2 concentration in order to determine NO_X emission rate.

[2.1.2 revised at 60 FR 26513, May 17, 1995]

2.1.2.1 For boilers, select an excess O_2 level for each fuel (and, optionally, for each combination of fuels) to be combusted that is representative for each of the four or more load levels. If a boiler operates using a single, consistent combination of fuels only, the testing may be performed using the combination rather than each fuel. If a fuel is combusted only for the purpose of testing ignition of the burners for a period of five minutes or less per ignition test or for start-up, then the boiler NO_X emission rate does not need to be tested separately for that fuel. Operate the boiler at a normal or conservatively high excess oxygen level in conjunction with these tests. Measure the NO_X and O_2 at each load point for each fuel or consistent fuel combination (and, optionally, for each combination of fuels) to be combusted. Measure the NO_X and O_2 concentrations according to Method 7E and 3A in appendix A of part 60 of this chapter. Select sampling points as specified

Copyright 1993-1997, The Bureau of National Affairs, Inc.

in section 5.1, Method 3 in appendix A of part 60 of this chapter. The designated representative for the unit may also petition the Administrator under §75.66 to use fewer sampling points. Such a petition shall include the proposed alternative sampling procedure and information demonstrating that there is no concentration stratification at the sampling location.

[2.1.2.1 revised at 60 FR 26513, May 17, 1995]

2.1.2.2 For stationary gas turbines, select sampling points and measure the NO_X and O_2 concentrations at each load point for each fuel or consistent combination of fuels (and, optionally, each combination of fuels) according to appendix A, Method 20 of part 60 of this chapter. For diesel or dual fuel reciprocating engines, measure the NO_X and O_2 concentrations according to Method 20 , but modify Method 20 by selecting a sampling site to be as close as practical to the exhaust of the engine.

[2.1.2.2 corrected at 58 FR 34126, June 23, 1993; revised at 60 FR 26513, May 17, 1995]

2.1.2.3 Allow the unit to stabilize for a minimum of 15 minutes (or longer if needed for the NO_X and O_2 readings to stabilize) prior to commencing NOx, O_2, and heat input measurements. Determine the average measurement system response time according to section 5.5 of Method 20 in appendix A, part 60 of this chapter. When inserting the probe into the flue gas for the first sampling point in each traverse, sample for at least one minute plus twice the average measurement system response time (or longer, if necessary to obtain a stable reading). For all other sampling points in each traverse, sample for at least one minute plus the average measurement response time (or longer, if necessary to obtain a stable reading). Perform three test runs at each load condition and obtain an arithmetic average of the runs for each load condition. During each test run on a boiler, record the boiler excess oxygen level at 5 minute intervals.

[2.1.2.3 removed and former 2.1.2.4 redesignated as 2.1.2.3 at 60 FR 26513, May 17, 1995]

[2.1.3—2.1.4 revised at 60 FR 26513, May 17, 1995]

2.1.3 Heat Input

Measure the total heat input (mmBtu) and heat input rate during testing (mmBtu/hr) as follows:

2.1.3.1 When the unit is combusting fuel, measure and record the flow of fuel consumed. Measure the flow of fuel with an in-line flowmeter(s) and automatically record the data. If a portion of the flow is diverted from the unit without being burned, and that diversion occurs downstream of the fuel flowmeter, an in-line flowmeter is required to account for the unburned fuel. Install and calibrate in- line flow meters using the procedures and specifications contained in sections 2.1.2, 2.1.3, 2.1.4, and 2.1.5 of appendix D of this part. Correct any gaseous fuel flow rate measured at actual temperature and pressure to standard conditions of 68°F and 29.92 inches of mercury.

2.1.3.2 For liquid fuels, analyze fuel samples taken according to the requirements of section 2.2 of appendix D of this part to determine the heat content of the fuel. Determine heat content of

Copyright 1993-1997, The Bureau of National Affairs, Inc.

liquid or gaseous fuel in accordance with the procedures in appendix F of this part . Calculate the heat input rate during testing (mmBtu/hr) associated with each load condition in accordance with Equations F-19 or F-20 in appendix F of this part and total heat input using Equation E-1 of this appendix. Record the heat input rate at each heat input/load point.

2.1.4 Emergency Fuel

The designated representative of a unit that is restricted by its Federal, State or local permit to combusting a particular fuel only during emergencies where the primary fuel is not available may petition the Administrator pursuant to the procedures in §75.66 for an exemption from the requirements of this appendix for testing the NO_X emission rate during combustion of the emergency fuel. The designated representative shall include in the petition a procedure for determining the NO_X emission rate for the unit when the emergency fuel is combusted, and a demonstration that the permit restricts use of the fuel to emergencies only. The designated representative shall also provide notice under §75.61(a) for each period when the emergency fuel is combusted.

2.1.4.1—2.1.4.4 [Removed]

[2.1.4.1—2.1.4.4 removed at 60 FR 26513, May 17, 1995]

[2.1.5—2.1.6.2 revised at 60 FR 26513, May 17, 1995]

2.1.5 Tabulation of Results

Tabulate the results of each baseline correlation test for each fuel or, as applicable, combination of fuels, listing: time of test, duration, operating loads, heat input rate (mmBtu/hr), F-factors, excess oxygen levels, and NO_X concentrations (ppm) on a dry basis (at actual excess oxygen level). Convert the NO_X concentrations (ppm) to NO_X emission rates (to the nearest 0.01 lb/mm/Btu) according to Equation F-5 of appendix F of this part or 19-3 in Method 19 of appendix A of part 60 of this chapter, as appropriate. Calculate the NO_X emission rate in lb/mmBtu for each sampling point and determine the arithmetic average NO_X emission rate of each test run. Calculate the arithmetic average of the boiler excess oxygen readings for each test run. Record the arithmetic average of the three test runs as the NO_X emission rate and the boiler excess oxygen level for the heat input/load condition.

Copyright 1993-1997, The Bureau of National Affairs, Inc.

2.1.6 Plotting of Results

Plot the tabulated results as an x-y graph for each fuel and (as applicable) combination of fuels combusted according to the following procedures.

2.1.6.1 Plot the heat input rate (mmBtu/hr) as the independent (or x) variable and the NO_X emission rates (lb/mmBtu) as the dependent (or y) variable for each load point. Construct the graph by drawing straight line segments between each load point. Draw a horizontal line to the y-axis from the minimum heat input (load) point.

2.1.6.2 Units that co-fire gas and oil may be tested while firing gas only and oil only instead of testing with each combination of fuels. In this case, construct a graph for each fuel.

2.2 Periodic NO_x Emission Rate Testing

Retest the NO_x emission rate of the gas-fired peaking unit or the oil-fired peaking unit prior to the earlier of 3,000 unit operating hours or the 5-year anniversary and renewal of its operating permit under part 72 of this chapter.

[2.3—2.3.2 revised at 60 FR 26513, May 17, 1995]

2.3 Other Quality Assurance/Quality Control-Related NOx Emission Rate Testing

When the operating levels of certain parameters exceed the limits specified below, or where the Administrator issues a notice requesting retesting because the NO_X emission rate data availability for when the unit operates within all quality assurance/quality control parameters in this section since the last test is less than 90.0 percent, as calculated by the Administrator, complete retesting of the NO_X emission rate by the earlier of: (1) 10 unit operating days (as defined in section 2.1 of appendix B of this part) or (2) 180 calendar days after exceeding the limits or after the date of issuance of a notice from the Administrator to re-verify the unit's NO_X emission rate. Submit test results in accordance with §75.60(a) within 45 days of completing the retesting.

2.3.1 For a stationary gas turbine, obtain a list of at least four operating parameters indicative of the turbine's NO_X formation characteristics, and the recommended ranges for these parameters at each tested load-heat input point, from the gas turbine manufacturer. If the gas turbine uses water or steam injection for NO_X control, the water/fuel or steam/fuel ratio shall be one of these parameters. During the NOx-heat input correlation tests, record the average value of each parameter for each load-heat input to ensure that the parameters are within the manufacturer's recommended range. Redetermine the NO_X emission rate-heat input correlation for each fuel and (optional) combination of fuels after continuously exceeding the manufacturer's recommended range of any of these parameters for one or more successive operating periods totaling more than

Copyright 1993-1997, The Bureau of National Affairs, Inc.

16 unit operating hours.

2.3.2 For a diesel or dual-fuel reciprocating engine, obtain a list of at least four operating parameters indicative of the engine's NO_X formation characteristics, and the recommended ranges for these parameters at each tested load-heat input point, from the engine manufacturer. Any operating parameter critical for NO_X control shall be included. During the NO_X heat- input correlation tests, record the average value of each parameter for each load- heat input to ensure that the parameters are within the manufacturer's recommended range. Redetermine the NO_X emission rate-heat input correlation for each fuel and (optional) combination or fuels after continuously exceeding the manufacturer's recommended range of any of these parameters for one or more successive operating periods totaling more than 16 unit operating hours.

2.3.3 For boilers using the procedures in this appendix, the NO_X emission rate heat input correlation for each fuel and (optional) combination of fuels shall be redetermined if the excess oxygen level at any heat input rate (or unit operating load) continuously exceeds by more than 2 percentage points O_2 from the boiler excess oxygen level recorded at the same operating heat input rate during the previous NO_X emission rate test for one or more successive operating periods totaling more than 16 unit operating hours.

[Former 2.3.3 removed and former 2.3.3.2 revised and redesignated as new 2.3.3 at 60 FR 26513, May 17, 1995]

2.3.3.1 [Removed]

[2.3.3.1 removed at 60 FR 26513, May 17, 1995]

2.3.3.3 [Removed]

[2.3.3.3 removed at 60 FR 26513, May 17, 1995]

2.4 Procedures for Determining Hourly NO_X Emission Rate

2.4.1 Record the time (hr. and min.), load (MWge or steam load in 1000 lb/hr), fuel flow rate and heat input rate (using the procedures in section 2.1.3 of this appendix) for each hour during which the unit combusts fuel. Calculate the total hourly heat input using Equation E-1 of this appendix. Record the heat input rate for each fuel to the nearest 0.1 mmBtu/hr. During partial unit operating hours or during hours where more than one fuel is combusted, heat input must be represented as an hourly rate in mmBtu/hr, as if the fuel were combusted for the entire hour at that rate (and not as the actual, total heat input during that partial hour or hour) in order to ensure proper correlation with the NO_X emission rate graph.

Copyright 1993-1997, The Bureau of National Affairs, Inc.

[2.4.1 revised at 60 FR 26513, May 17, 1995]

2.4.2 Use the graph of the baseline correlation results (appropriate for the fuel or fuel combination) to determine the NO_X emissions rate (lb/mmBtu) corresponding to the heat input rate (mmBtu/hr). Input this correlation into the data acquisition and handling system for the unit. Linearly interpolate to 0.1 mmBtu/hr heat input rate and 0.01 lb/mmBtu NO_X.

[2.4.2 revised at 60 FR 26513, May 17, 1995]

[2.4.3—2.4.4 added at 60 FR 26513, May 17, 1995]

2.4.3 To determine the NO_X emission rate for a unit co-firing fuels that has not been tested for that combination of fuels, interpolate between the NO_X emission rate for each fuel as follows. Determine the heat input rate for the hour (in mmBtu/hr) for each fuel and select the corresponding NO_X emission rate for each fuel on the appropriate graph. (When a fuel is combusted for a partial hour, determine the fuel usage time for each fuel and determine the heat input rate from each fuel as if that fuel were combusted at that rate for the entire hour in order to select the corresponding NO_X emission rate.) Calculate the total heat input to the unit in mmBtu for the hour from all fuel combusted using Equation E-1. Calculate a Btu-weighted average of the emission rates for all fuels using Equation E-2 of this appendix.

2.4.4 For each hour, record the critical quality assurance parameters, as identified in the monitoring plan, and as required by section 2.3 of this appendix.

2.5 Missing Data Procedures

[2.5 revised at 60 FR 26513, May 17, 1995]

Provide substitute data for each unit electing to use this alternative procedure whenever a valid quality-assured hour of NO_X emission rate data has not been obtained according to the procedures and specifications of this appendix.

[2.5.1—2.5.5 added at 60 FR 26513, May 17, 1995]

2.5.1 Use the procedures of this section whenever any of the quality assurance/quality control parameters exceeds the limits in section 2.3 of this appendix or whenever any of the quality assurance/quality control parameters are not available.

2.5.2 Substitute missing NO_X emission rate data using the highest NO_X emission rate tabulated during the most recent set of baseline correlation tests for the same fuel or, if applicable, combination of fuels.

2.5.3 Maintain a record indicating which data are substitute data and the reasons for the failure to provide a valid quality-assured hour of NO_X emission rate data according to the procedures and specifications of this appendix.

2.5.4 Substitute missing data from a fuel flowmeter using the procedures in section 2.4.3 of

Copyright 1993-1997, The Bureau of National Affairs, Inc.

appendix D of this part.

2.5.5 Substitute missing data for gross calorific value of fuel using the procedures in section 2.4.2 of appendix D of this part .

3. Calculations

3.1 Heat Input

Calculate the total heat input by summing the product of heat input rate and fuel usage time of each fuel, as in the following equation:

$$H_T = HI_{fuel\,1}\, t_1 + HI_{fuel\,2}\, t_2 + HI_{fuel\,3}\, t_3 + \ldots + HI_{last\ fuel}\, t_{last} \qquad (Eq.\ E-1)$$

Where:

H_T = Total heat input of fuel flow or a combination of fuel flows to a unit, mmBtu;

$HI_{fuel\ 1,2,3,\ldots last}$ = Heat input rate from each fuel during fuel usage time, in mmBtu/hr, as determined using equation F-19 or F-20 in section 5.5 of appendix F of this part, mmBtu/hr;

$t_{1,2,3,\ldots last}$ = Fuel usage time for each fuel, rounded up to the nearest .25 hours.

Note: For hours where a fuel is combusted for only part of the hour, use the fuel flow rate or mass flow rate during the fuel usage time, instead of the total fuel flow during the hour, when calculating heat input rate using Equation F-19 or F-20.

[3.1 revised at 60 FR 26513, May 17, 1995]

3.2 F-factors

Determine the F-factors for each fuel or combination of fuels to be combusted according to section of appendix F of this part.

[Former 3.2 removed and former 3.3 revised and redesignated as new 3.2 at 60 FR 26513, May 17, 1995]

3.3 NO_X Emission Rate

[Former 3.4 revised and redesignated as new 3.3 at 60 FR 26513, May 17, 1995]

Copyright 1993-1997, The Bureau of National Affairs, Inc.

3.3.1 Conversion from Concentration to Emission Rate [Amended]

Convert the NO_X concentrations (ppm) and O_2 concentrations to NO_X emission rates (to the nearest 0.01 lb/mmBtu) according to the appropriate one of the following equations: F-5 in appendix F of this part for dry basis concentration measurements, or 19-3 in Method 19 of appendix A of part 60 of this chapter for wet basis concentration measurements.

[Former 3.4.1 revised and redesignated as new 3.3.1 at 60 FR 26513, May 17, 1995]

3.3.2 Quarterly Average NO_X Emission Rate

Report the quarterly average emission rate (lb/mmBtu) as required in subpart G of this part. Calculate the quarterly average NO_X emission rate according to Equation F-9 in Appendix F of this part .

[Former 3.4.2 revised and redesignated as new 3.3.2 at 60 FR 26513, May 17, 1995]

3.3.3 Annual Average NO_X Emission Rate

Report the average emission rate (lb/mmBtu) for the calendar year as required in subpart G of this part. Calculate the average NO_X emission rate according to equation F-10 in appendix F of this part.

[Former 3.4.3 corrected at 58 FR 40746, July 30, 1993; revised and redesignated as new 3.3.3 at 60 FR 26513, May 17, 1995]

3.3.4 Average NO_X Emission Rate During Co-firing of Fuels [Amended] (Eq. E-2)

Where:

E_h=NOx emission rate for the unit for the hour, lb/mmBtu;

$$E_h = \frac{\sum_{f=1}^{\text{all fuels}} \left(E_f \times HI_f \; t_f\right)}{H_T}$$

E_f=NOx emission rate for the unit for a given fuel at heat input rate HI_f, lb/mmBtu;

HI_f=Heat input rate for a given fuel during the fuel usge time, as determined using equation F-19 or F-20 in section 5.5 of appendix F of this part, mmBtu/hr;

H_T=Total heat input for all fuels for the hour from Equation E-1;

t_f=Fuel usage time for each fuel, rounded to the nearest .25 hour.

Copyright 1993-1997, The Bureau of National Affairs, Inc.

Note: For hours where a fuel is combusted for only part of the hour, use the fuel flow rate or mass flow rate during the fuel usage time, instead of the total fuel flow or mass flow during the hour, when calculating heat input rate using Equation F-19 or F-20.

[3.3.4 added at 60 FR 26513, May 17, 1995]

3.4.4 [Removed]

[3.4.4 removed at 60 FR 26513, May 17, 1995]

3.5 [Removed]

[3.5 removed at 60 FR 26513, May 17, 1995]

4. Quality Assurance/Quality Control Plan

Include a section on the NO_X emission rate determination as part of the monitoring quality assurance/quality control plan required under §75.21 and appendix B of this part for each gas-fired peaking unit and each oil-fired peaking unit. In this section present information including, but not limited to, the following: (1) a copy of all data and results from the initial NO_X emission rate testing, including the values of quality assurance parameters specified in Section 2.3 of this appendix; (2) a copy of all data and results from the most recent NO_X emission rate load correlation testing; (3) a copy of the unit manufacturer's recommended range of quality assurance- and quality control-related operating parameters.

[4 introductory text revised at 60 FR 26513, May 17, 1995]

4.1 Submit a copy of the unit manufacturer's recommended range of operating parameter values, and the range of operating parameter values recorded during the previous NO_X emission rate test that determined the unit's NO_X emission rate, along with the unit's revised monitoring plan submitted with the certification application.

[4.1 revised at 60 FR 26513, May 17, 1995]

4.2 Keep records of these operating parameters for each hour of operation in order to demonstrate that a unit is remaining within the manufacturer's recommended operating range.

Appendix F to Part 75—Conversion Procedures

Copyright 1993-1997, The Bureau of National Affairs, Inc.

1. Applicability

Use the procedures in this appendix to convert measured data from a monitor or continuous emission monitoring system into the appropriate units of the standard.

2. Procedures for SO_2 emissions

Use the following procedures to compute hourly, quarterly, and annual SO_2 mass emissions (in lb/hr). Use the procedures in Method 19 in Appendix A to part 60 of this chapter to compute hourly SO_2 emission rates (in lb/mmBtu) for qualifying Phase I technologies.

2.1 When measurements of SO_2 concentration and flow rate are on a wet basis, use the following equation to compute hourly SO_2 mass emissions (in lb/hr).

$E_h = K\ C_h\ Q_h$

(Eq. F-1)

where,

E_h=Hourly SO_2 mass emissions, lb/hr.

$K=1.660\times10^{-7}$ for SO_2, (lb/scf)/ppm.

C_h=Hourly average SO_2 concentration, stack moisture basis, ppm.

Q_h=Hourly average volumetric flow rate, stack moisture basis, scfh.

2.2 When measurements by the SO_2 pollutant concentration monitor are on a dry basis and the flow rate monitor measurements are on a wet basis, use the following equation to compute hourly SO_2 mass emissions (in lb/hr).

$$E_h = K\ C_{hp}\ Q_{hs}\ \frac{(100 - \%H_2O)}{100}$$

(Eq. F-2)

where,

E_h=Hourly SO_2 mass emissions, lb/hr.

$K=1.660\times10^{-7}$ for SO_2 , (lb/scf)/ppm.

C_{hp}=Hourly average SO_2 concentration, ppm (dry).

Q_{hs}=Hourly average volumetric flow rate, scfh as measured (wet).

$\%H_2O$=Hourly average stack moisture content, percent by volume.

2.3 Use the following equations to calculate total SO_2 mass emissions for each calendar quarter (Eq. F-3) and for each calendar year (Eq. F-4) in tons.

Copyright 1993-1997, The Bureau of National Affairs, Inc.

$$E_q = \frac{\sum_{k=1}^{n} E_h}{2000}$$

(Eq. F-3)

(Eq. F-3)
where,
E_q=Quarterly total SO_2 mass emissions, tons.
E_h=Hourly SO_2 mass emissions, lb/hr.
n=Number of hourly SO_2 emissions values during calendar quarter.
2000=Conversion of 2000 lb per ton.

$$E_a = \sum_{q=1}^{4} E_q$$

(Eq. F-4)
where,
E_a=Annual total SO_2 mass emissions, tons.
E_q=Quarterly SO_2 mass emissions, tons.
q=Quarters for which E_q are available during calendar year.

2.4 Round all SO_2 mass emissions to the number of decimal places identified in §75.50(c) or §75.54(c) of this part (in lb/hr).

[2.4 revised at 60 FR 26513, May 17, 1995]

3. Procedures for NO_x Emission Rate

Use the following procedures to convert continuous emission monitoring system measurements of NO_x concentration (ppm) and diluent concentration (percentage) into NO_x emission rates (in lb/mmBtu). Perform measurements of NO_x and diluent (O_2 or CO_2) concentrations on the same moisture (wet or dry) basis.

3.1 When the NO_x continuous emission monitoring system uses O_2 as the diluent, and measurements are performed on a dry basis, use the following conversion procedure:

$$E = K\ C_h\ F \frac{20.9}{20.9 - \%O_2}$$

(Eq. F-5)
where,
K, E, C_h, F, and $\%O_2$ are defined in section 3.3 of this appendix. When measurements are performed on a wet basis, use the equations in Method 19 in Appendix A of part 60 of this chapter.

Copyright 1993-1997, The Bureau of National Affairs, Inc.

3.2 When the NO_X continuous emission monitoring system uses CO_2 as the diluent, use the following conversion procedure:

$$E = K\,C_h\;F_c\,\frac{100}{\%\,CO_2} \qquad \text{Eq. F-6}$$

Where:

K, E, Ch, Fc, and $\%CO_2$ are defined in section 3.3 of this appendix.

Where CO_2 and NOx measurements are performed on a different moisture basis, use the equations in Method 19 in Appendix A of part 60 of this chapter.

[3.2 revised at 60 FR 26513, May 17, 1995]

3.3 Use the definitions listed below to derive values for the parameters in Equations F-5 and F-6 of this appendix.

3.3.1 K=1.194×10—7 (lb/dscf)/ppm NO_x.

[3.3.1 corrected at 58 FR 40746, July 30, 1993]

3.3.2 E=pollutant emissions, lb/mmBtu.

3.3.3 C_h=hourly average pollutant concentration, ppm.

3.3.4 $\%O_2$, $\%CO_2$=oxygen or carbon dioxide volume (expressed as percent O_2 or CO_2). A minimum concentration of 5.0 percent CO_2 and a maximum concentration of 14.0 percent O_2 may be substituted for measured diluent gas concentration values during unit start-up.

[3.3.4 amended at 60 FR 26513, May 17, 1995]

3.3.5 F, F_c=a factor representing a ratio of the volume of dry flue gases generated to the caloric value of the fuel combusted (F), and a factor representing a ratio of the volume of CO_2 generated to the calorific value of the fuel combusted (F_c), respectively. Table 1 lists the values of F and F_c for different fuels.

Table 1.--F-and F_c-Factors

Fuel	F-factor (decf/mmBtu)	F_c-factor (scf CO_2/mmBtu)
Coal (as defined by ASTM D388-92):		
Anthracite	10,100	1,970
Bituminous and subbituminous	9,780	1,800
Lignite	9,860	1,910
Oil	9,190	1,420
Gas:		
Natural gas	8,710	1,040
Propane	8,710	1,190
Butane	8,710	1,250

Copyright 1993-1997, The Bureau of National Affairs, Inc.

Wood:		
Bark.....	9,600	1,920
Wood residue.....	9,240	1,830

[1] Determined at standard conditions: 20 °C (68 °F) and 29.92 inches of mercury.

3.3.6 Equations F-7a and F-7b may be used in lieu of the F or F_c factors specified in Section 3.3.5 of this appendix to calculate an F factor (dscf/mmBtu) on a dry basis or an F_c factor (scf CO_2/mmBtu) on either a dry or wet basis.

(Calculate all F- and F_c factors at standard conditions of 20 °C (68 °F) and 29.92 inches of mercury.)

(Eq. F-7a)

(Eq. F-7b)

3.3.6.1 H, C, S, N, and O are content by weight of hydrogen, carbon, sulfur, nitrogen, and oxygen (expressed as percent), respectively, as determined on the same basis as the gross calorific value (GCV) by ultimate analysis of the fuel combusted using ASTM D3176-89, "Standard Practice for Ultimate Analysis of Coal and Coke" (solid fuels), ASTM D5291-92, "Standard Test Methods for Instrumental Determination of Carbon, Hydrogen, and Nitrogen in Petroleum Products and Lubricants" (liquid fuels) or computed from results using ASTM D1945-91, "Standard Test Method for Analysis of Natural Gas by Gas Chromatography" or ASTM D1946-90, "Standard Practice for Analysis of Reformed Gas by Gas Chromatography" (gaseous fuels) as applicable. (These methods are incorporated by reference under §75.6 of this part.)

[3.3.6.1 revised at 60 FR 26513, May 17, 1995]

3.3.6.2 GCV is the gross calorific value (Btu/lb) of the fuel combusted determined by ASTM D2015-91, "Standard Test Method for Gross Calorific Value of Coal and Coke by the Adiabatic Bomb Calorimeter", ASTM D1989-92 "Standard Test Method for Gross Calorific Value of Coal and Coke by Microprocessor Controlled Isoperibol Calorimeters," or ASTM D3286-91a "Standard Test Method for Gross Calorific Value of Coal and Coke by the Isoperibol Bomb Calorimeter" for solid and liquid fuels, and ASTM D240-87 (Reapproved 1991) "Standard Test Method for Heat of Combustion of Liquid Hydrocarbon Fuels by Bomb Calorimeter", or ASTM D2382-88 "Standard Test Method for Heat of Combustion of Hydrocarbon Fuels by Bomb Calorimeter (High-Precision Method)" for oil; and ASTM D3588-91 "Standard Practice for Calculating Heat Value, Compressibility Factor, and Relative Density (Specific Gravity) of Gaseous Fuels," ASTM D4891-89 "Standard Test Method for Heating Value of Gases in Natural Gas Range by Stoichiometric Combustion," GPA Standard 2172 86 "Calculation of Gross Heating Value, Relative Density and Compressibility Factor for Natural Gas Mixtures from

Copyright 1993-1997, The Bureau of National Affairs, Inc.

$$F = \frac{3.64\ (\%H) + 1.53\ (\%C) + 0.57\ (\%S) + 0.14\ (\%N) - 0.46\ (\%O)}{GCV} \times 10^6$$

$$F_c = \frac{321 \times 10^3 \ (\% \ C)}{GCV}$$

(Eq. F–7b)

Compositional Analysis," GPA Standard 2261-90 "Analysis for Natural Gas and Similar Gaseous Mixtures by Gas Chromatography," or ASTM D1826-88, "Standard Test Method for Calorific (Heating) Value of Gases in Natural Gas Range by Continuous Recording Calorimeter" for gaseous fuels, as applicable. (These methods are incorporated by reference under §75.6).

[3.3.6.2 revised at 60 FR 26513, May 17, 1995]

3.3.6.3 For affected units that combust a combination of fossil (coal, oil and gas) and nonfossil (e.g., bark, wood, residue, or refuse) fuels, the F or F_c value is subject to the Administrator's approval.

3.3.6.4 For affected units that combust combinations of fossil fuels or fossil fuels and wood residue, prorate the F or F_c factors determined by Section 3.3.5 of this appendix in accordance with the applicable formula as follows:

$$F = \sum_{i=1}^{n} X_i F_i \qquad F_c = \sum_{i=1}^{n} X_i (F_c)_i$$

(Eq. F-8)

where,

X_i = Fraction of total heat input derived from each type of fuel (e.g., natural gas, bituminous coal, wood).

F_i or $(F_c)_i$ = Applicable F or F_c factor for each fuel type determined in accordance with Section 3.3.5 of this appendix.

n = Number of fuels being combusted in combination.

3.4 Use the following equations to calculate the average NO_X emission rate for each calendar quarter (Eq. F-9) and the average emission rate for the calendar year (Eq. F-10) in lb/mmBtu.

$$E_q = \sum_{i=1}^{n} \frac{E_i}{n} \qquad \text{(Eq. F–9)}$$

where:

Eq=Quarterly average NOx emission rate, lb/mmBtu.

Ei=Hourly average Nox emission rate, lb/mmBtu.

n=Number of hourly rates during calendar quarter.

$$E_a = \sum_{i=1}^{m} \frac{E_i}{m} \qquad \text{(Eq. F – 10)}$$

where:

E_a=Average NOx emission rate for the calendar year, lb/mmBtu.

E_i=Hourly average NOx emission rate, lb/mmBtu.

m=Number of hours for which E_i is available in the calendar year.

Copyright 1993-1997, The Bureau of National Affairs, Inc.

[3.4 corrected at 58 FR 40746, July 30, 1993; revised at 60 FR 26513, May 17, 1995; amended at 61 FR 25585, May 22, 1996]

3.5 Round all NO_x emission rates to the nearest 0.01 lb/mmBtu.

4. Procedures for CO_2 Mass Emissions

Use the following procedures to convert continuous emission monitoring system measurements of CO_2 concentration (percentage) and volumetric flow rate (scfh) into CO_2 mass emissions (in tons/day) when the owner or operator uses a CO_2 continuous emission monitoring system (consisting of a CO_2 or O_2 pollutant monitor) and a flow monitoring system to monitor CO_2 emissions from an affected unit.

[Section 4 introductory text amended at 60 FR 26513, May 17, 1995]

4.1 When CO_2 concentration is measured on a wet basis, use the following equation to calculate hourly CO_2 mass emissions rates (in tons/hr).

$E_h = K\, C_h\, Q_h$

(Eq. F-11)

where,

E_h = Hourly CO_2 mass emissions, tons/hr.

$K = 5.7 \times 10^{-7}$ for CO_2, (tons/scf) /%CO_2.

C_h = Hourly average CO_2 concentration, stack moisture basis, %CO_2. A minimum concentration of 5.0 percent CO_2 may be substituted for the measured concentration during unit start- up>

Q_h = Hourly average volumetric flow rate, stack moisture basis, scfh.

[4.1 revised at 60 FR 26513, May 17, 1995]

4.2 When CO_2 concentration is measured on a dry basis, use Equation F-2 to calculate the hourly CO_2 mass emissions (in tons/hr) with a K-value of 5.7×10^{-7} (tons/scf)%CO_2, where E_h = hourly CO_2 mass emissions, tons/hr and C_{hp} = hourly average CO_2 concentration in flue; dry basis, %CO_2.

4.3 Use the following equations to calculate total CO_2 mass emissions for each calendar quarter (Equation F-12 and for each calendar year (Equation F-13).

$$E_{CO_{2q}} = \sum_{i=1}^{H_R} E_{h_i}$$

(Eq. F-12)

where,

Copyright 1993-1997, The Bureau of National Affairs, Inc.

E_{co2q} = Quarterly total CO_2 mass emissions, tons.
E_{hi} = Hourly CO_2 mass emissions (tons/hr).
H_R = Number of hourly CO_2 mass emsissions available during calendar quarter.

$$E_{CO_{2a}} = \sum_{q=1}^{4} E_{CO_{2q}}$$

(Eq. F-13)
where,
E_{CO2a}=Annual total CO_2 mass emissions, tons.
E_{CO2q}=Quarterly total CO_2 mass emissions, tons.
q=Quarters for which E_{CO2q} are available during calendar year.

[4.3 corrected at 58 FR 40746, July 30, 1993]

[4.3.1—4.3.3 amended at 60 FR 26513, May 17, 1995]

4.3.1 On or after January 1, 1996, use the missing data provisions of §75.35 and do not use the provisions of this section. Prior to January 1, 1996, use either the provisions of this section or the provisions of §75.35. Whenever a valid hour of CO_2 concentration data has not been obtained and recorded, substitute for each hour in each missing data period the average of the recorded CO_2 concentration for the hour immediately before and the hour immediately following the missing data period.

4.3.2 On or after January 1, 1996, use the missing data provisions of §75.35 and do not use the provisions of this section. Prior to January 1, 1996, use either the provisions of this section or the provisions of §75.35. Whenever a valid hour of volumetric flow rate data has not been obtained and recorded, use the procedure specified in subpart D of this part to provide substitute data.

4.3.3 On or after January 1, 1996, use the missing data provisions of §75.35 and do not use the provisions of this section. Prior to January 1, 1996, use either the provisions of this section or the provisions of §75.35. Whenever CO_2 mass emissions data have not been measured and recorded for a period of 72 consecutive unit operating hours or for at least 90 percent of the total unit operating hours during the calendar quarter, use the appropriate procedures in Appendix G to this part to estimate CO_2 mass emissions from the affected unit.

4.4 For an affected unit, when the owner or operator is continuously monitoring O_2 concentration (in percent by volume) of flue gases using an O_2 monitor, use the equations and procedures in section 4.4.1 through 4.4.3 of this appendix to determine hourly CO_2 mass emissions (in tons).

4.4.1 Use appropriate F and F_c factors from section 3.3.5 of this appendix in the following equation to determine hourly average CO_2 concentration of flue gases (in percent by volume).

Copyright 1993-1997, The Bureau of National Affairs, Inc.

$$CO_{2d} = 100 \frac{F_c}{F} \frac{20.9 - O_{2d}}{20.9} \quad \text{(Eq. F–14a)}$$

(Eq. F-14a)
Where:
CO_{2d}=Hourly average CO_2 concentration, percent by volume, dry basis.
F, F_c=F-factor or carbon-based Fc-factor from section 3.3.5 of this appendix.
20.9=Percentage of O_2 in ambient air.
O_{2d}=Hourly averge O_2 concentration, percent by volume, dry basis. A maximum concentration of 14.0 percent O_2 may be substituted for the measured concentration during unit start- up.
or

$$CO_{2w} \frac{100}{20.9} \frac{F_c}{F} \left[20.9 \left(\frac{100 - \%H_2O}{100} \right) - O_{2w} \right] \quad \text{(Eq. F – 14b}$$

(Eq. F-14b)
Where:
CO_{2w}=Hourly average CO_2 concentration, percent by volume, wet basis.
O_{2w}=Hourly average O_2 concentration, percent by volume, wet basis. A maximum concentration of 14.0 percent O_2 may be substituted for the measured concentration during unit start- up.
F, F_c=F-factor or carbon-based F_c-factor from section 3.3.5 of this appendix.
20.9=Percentage of O_2 in ambient air.
$\%H_2O$=Moisture content of gas in the stack, percent.

[4.4.1 corrected at 58 FR 40746, July 30, 1993; revised at 60 FR 26513, May 17, 1995; 61 FR 25585, May 22, 1996]

[4.4.2—5.4 amended at 60 FR 26513, May 17, 1995]

4.4.2 Determine CO_2 mass emissions (in tons) from hourly average CO_2 concentration (percent by volume) using Equation F-11 and the procedure in section 4.1, where O_2 measurements are on a wet basis, or using the procedures in section 4.2 of this appendix, where O_2 measurements are on a dry basis.

4.4.3 On or after January 1, 1996, use the missing data provisions of §75.35 and do not use the provisions of this section. Prior to January 1, 1996, either use the provisions of §75.35 or use the provisions of this section. Whenever a valid hour of O_2 concentration data has not been obtained and recorded, use the procedures in Sections 4.3.1-4.3.3 of this appendix to provide substitute data for each hour of each missing data period except that the phrase "CO_2 concentration" is replaced with "O_2 concentration."

Copyright 1993-1997, The Bureau of National Affairs, Inc.

5. Procedures for Heat Input

Use the following procedures to compute heat input to an affected unit (in mmBtu/hr or mmBtu/day).

5.1 Calculate and record heat input to an affected unit on an hourly basis, except as provided below. The owner or operator may choose to use the provisions specified in §75.16(e) or in section 2.1.2 of appendix D of this part in conjunction with the procedures provided below to apportion heat input among each unit using the common stack or common pipe header.

5.2 For an affected unit that has a flow monitor (or approved alternate monitoring system under subpart E of this part for measuring volumetric flow rate) and a diluent gas (O_2 or CO_2) monitor, use the recorded data from these monitors and one of the following equations to calculate hourly heat input (in mmBtu/hr).

5.2.1 When measurements of CO_2 concentration are on a wet basis, use the following equation:

$$HI = Q_w \frac{1}{F_c} \frac{\% CO_{2w}}{100}$$

(Eq. F-15)

where,

HI=Hourly heat input, mmBtu/hr.

Q_w=Hourly average volumetric flow rate, wet basis, scfh.

F_c=Carbon-based F-factor, listed in Section 3.3.5 of this appendix for each fuel, scf/mmBtu.

$\%CO_{2w}$=Hourly concentration of CO_2, percent CO_2 wet basis. A minimum concentration of 5.0 percent CO_2 may be substituted for the measured concentration during unit startup.

5.2.2 When measurements of CO_2 concentration are on a dry basis, use the following equation:

[Corrected at 58 FR 34126, June 23, 1993]

$$HI = Q_h \left[\frac{(100 - \%H_2O}{100F_c} \right] \left(\frac{\% CO_{2d}}{100} \right)$$

(Eq. F-16)

where

HI=Hourly heat input, mmBtu/hr.

Q_h=Hourly average volumetric flow rate, wet basis, scfh.

F_c=Carbon-based F-Factor, listed above in Section 3.3.5 of this appendix for each fuel, scf/mmBtu.

$\%CO_{2d}$=Hourly concentration of CO_2, percent CO_2 dry basis. A minimum concentration of 5.0 percent CO_2 may be substituted for the measured concentration during unit startup.

Copyright 1993-1997, The Bureau of National Affairs, Inc.

$\%H_2O$=Moisture content of gas in the stack, percent.

5.2.3 When measurements of O_2 concentration are on a wet basis, use the following equation:

$$HI = Q_w \frac{1}{F} \frac{[(20.9/100)(100-\%H_2O)-\%O_{2w}]}{20.9}$$

(Eq. F-17)

where

HI=Hourly heat input, mmBtu/hr.

Q_w=Hourly average volumetric flow rate, wet basis, scfh.

F=Dry basis F-Factor, listed above in Section 3.3.5 of this appendix for each fuel, dscf/mmBtu.

$\%O_{2w}$=Hourly concentration of O_2, percent O_2 wet basis. A maximum concentration of 14.0 percent O_2 may be substituted for the measured concentration during unit startup.

$\%H_2O$=Hourly average stack moisture content, percent by volume.

5.2.4 When measurements of O_2 concentration are on a dry basis, use the following equation:

$$HI = Q_w \left[\frac{(100-\%H_2O}{100F}\right]\left[\frac{(20.9-\%O_{2d})}{20.9}\right]$$

(Eq. F-18)

where,

HI=Hourly heat input, mmBtu/hr.

Q_w=Hourly average volumetric flow, wet basis, scfh.

F=Dry basis F-factor, listed above in Section 3.3.5 of this appendix for each fuel, dscf/mmBtu.

$\%H_2O$=Moisture content of the stack gas, percent.

$\%O_{2d}$=Hourly concentration of O_2, percent O_2 dry basis. A maximum concentration of 14.0 percent O_2 may be substituted for the measured concentration during unit startup.

5.3 On or after January 1, 1996, use the missing data provisions of §75.36 and do not use the provisions of this section. Prior to January 1, 1996, use either the missing data provisions of this section or the provisions of §75.36. Whenever a valid hour of flow data has not been obtained and recorded, use the procedures specified in subpart D of this part to provide substitute data.

5.4 On or after January 1, 1996, use the missing data provisions of §75.36 and do not use the provisions of this section. Prior to January 1, 1996, use either the missing data provisions of this section or the provisions of §75.36. Whenever a valid hour of diluent (O_2 or CO_2) concentration data has not been obtained and recorded, substitute for each hour in each missing data period the average of the recorded diluent gas (O_2 or CO_2) percentage concentration for the hour immediately before and the hour immediately following the missing data period.

[5.5—5.5.2 revised at 60 FR 26513, May 17, 1995]

5.5 For a gas-fired or oil-fired unit that does not have a flow monitor and is using the

Copyright 1993-1997, The Bureau of National Affairs, Inc.

procedures specified in appendix D to this part to monitor SO_2 emissions or for any affected unit using a common stack for which the owner or operator chooses to determine heat input by fuel sampling and analysis, use the following procedures to calculate hourly heat input in mmBtu/hr.

5.5.1 When the unit is combusting oil, use the following equation to calculate hourly heat input. (Eq. F-19)

$$HI_o = M_o \frac{GCV_o}{10^6}$$

Where:

HIo=Hourly heat input from oil, mmBtu/hr.

Mo=Mass of oil consumed per hour, as determined using procedures in appendix D of this part, in lb, tons, or kg.

GCVo=Gross calorific value of oil, as measured daily by ASTM D240-87 (Reapproved 1991), ASTM D2015- 91, or ASTM D2382-88, Btu/unit mass (incorporated by reference under §75.6 of this part).

10^6=Conversion of Btu to mmBtu.

When performing oil sampling and analysis solely for the purpose of the missing data procedures in §75.36, oil samples for measuring GCV may be taken weekly and the procedures specified in appendix D of this part for determining the mass of oil consumed per hour are optional.

[5.5.1 amended at 61 FR 25585, May 22, 1996]

5.5.2 When the unit is combusting gaseous fuels, use the following equation to calculate heat input from gaseous fuels for each hour.

(Eq. F-20)

$$HI_g = \frac{Q_g \times GCV_g}{10{,}000}$$

Where:

HI_g=Hourly heat input from gaseous fuel, mmBtu/hour.

Q_g=Metered flow or amount of gaseous fuel combusted during the hour, hundred cubic feet.

GCV_g=Gross calorific value of gaseous fuel, as determined by sampling at least every month the gaseous fuel is combusted, or as verified by the contractual supplier at least once every month the gaseous fuel is combusted using ASTM D1826-88. ASTM D3588-91, ASTM D4891-89, GPA Standard 2172-86 "Calculation of Gross Heating Value, Relative Density and Compressibility Factor for Natural Gas Mixtures from Compositional Analysis," or GPA Standard 2261-90 "Analysis for Natural Gas and Similar Gaseous Mixtures by Gas Chromatography," Btu/cubic foot (incorporated by reference under §75.6 of this part).

10,000=Conversion factor, (Btu-100 scf)/(mmBtu-scf).

5.5.3 When the unit is combusting coal, use the procedures, methods, and equations in sections 5.5.3.1-5.5.3.3 of this appendix to determine the heat input from coal for each 24-hour period.

Copyright 1993-1997, The Bureau of National Affairs, Inc.

(All ASTM methods are incorporated by reference under §75.6 of this part.)

5.5.3.1 Perform coal sampling daily according to section 5.3.2.2 in Method 19 in appendix A to part 60 of this chapter and use ASTM Method D2234-89, "Standard Test Methods for Collection of a Gross Sample of Coal," (incorporated by reference under §75.6) Type I, Conditions A, B, or C and systematic spacing for sampling. (When performing coal sampling solely for the purposes of the missing data procedures in §75.36, use of ASTM D2234-89 is optional, and coal samples may be taken weekly.)

[5.5.3.1 amended at 60 FR 26513, May 17, 1995]

5.5.3.2 Use ASTM D2013-86, "Standard Method of Preparing Coal Samples for Analysis," for preparation of a daily coal sample and analyze each daily coal sample for gross calorific value using ASTM D2015-91, "Standard Test Method for Gross Calorific Value of Coal and Coke by the Adiabatic Bomb Calorimeter", ASTM 1989-92 "Standard Test Method for Gross Calorific Value of Coal and Coke by Microprocessor Controlled Isoperibol Calorimeters," or ASTM 3286-91a "Standard Test Method for Gross Calorific Value of Coal and Coke by the Isoperibol Bomb Calorimeter." (All ASTM methods are incorporated by reference under §75.6 of this part.)

On-line coal analysis may also be used if the on-line analytical instrument has been demonstrated to be equivalent to the applicable ASTM methods under §§75.23 and 75.66.

[5.5.3.2 amended at 60 FR 26513, May 17, 1995]

5.5.3.3 Calculate the heat input from coal using the following equation:

$$HI_c = M_c \frac{GCV_c}{500}$$

(Eq. F-21)

Where:

HI_c=Daily heat input from coal, mmBtu/day.

M_c=Mass of coal consumed per day, as measured and recorded in company records, tons.

GCV_c=Gross calorific value of coal sample, as measured by ASTM D3176- 89, D1989-92, D3286-91a, or D2015- 91, Btu/lb.

500=Conversion of Btu/lb to mmBtu/ton.

[5.5.3.3 revised at 60 FR 26513, May 17, 1995]

[5.5.4—5.5.7 added at 60 FR 26513, May 17, 1995]

5.5.4 For units obtaining heat input values daily instead of hourly, apportion the daily heat input using the fraction of the daily steam load or daily unit operating load used each hour in order to obtain HI_i for use in the above equations. Alternatively, use the hourly mass of coal consumed in equation F-21.

5.5.5 If a daily fuel sampling value for gross calorific value is not available, substitute the maximum gross calorific value measured from the previous 30 daily samples. If a monthly fuel

Copyright 1993-1997, The Bureau of National Affairs, Inc.

sampling value for gross calorific value is not available, substitute the maximum gross calorific value measured from the previous 3 monthly samples.

5.5.6 If a fuel flow value is not available, use the fuel flowmeter missing data procedures in section 2.4 of appendix D of this part . If a daily coal consumption value is not available, substitute the maximum fuel feed rate during the previous thirty days when the unit burned coal.

5.5.7 Results for samples must be available no later than thirty calendar days after the sample is composited or taken. However, during an audit, the Administrator may require that the results be available in five business days, or sooner if practicable.

6. Procedure for Converting Volumetric Flow to STP

Use the following equation to convert volumetric flow at actual temperature and pressure to standard temperature and pressure.

$$F_{STP} = F_{Actual}\left(T_{Std}/T_{Stack}\right)\left(P_{Sta\right.$$

Where:

F_{STP}=Flue gas volumetric flow rate at standard temperature and pressure, scfh.

F_{Actual}=Flue gas volumetric flow rate at actual temperature and pressure, acfh.

T_{Std}=Standard temperature=528 °R.

T_{Stack}=Flue gas temperature at flow monitor location, °R, where °R=460+°F.

P_{Stack}=The absolute flue gas pressure=barometric pressure at the flow monitor location + flue gas static pressure, inches of mercury.

P_{Std}=Standard pressure=29.92 inches of mercury.

[6 revised at 60 FR 26513, May 17, 1995]

7. Procedures for SO_2 Mass Emissions at Units With SO_2 Continuous Emission Monitoring Systems During the Combustion of Pipeline Natural Gas

The owner or operator shall use the following equation to calculate hourly SO_2 mass emissions as allowed for units with SO_2 continuous emission monitoring systems if, during the combustion of pipeline natural gas, SO_2 emissions are determined in accordance with § 75.11(e)(1).

E_h=(0.0006) HI (Eq. F-23)

Where,

E_h=Hourly SO_2 mass emissions, lb/hr.

0.0006=Default SO_2 emission rate for pipeline natural gas, lb/mmBtu.

HI=Hourly heat input, as determined using the procedures of section 5.2 of this appendix.

Copyright 1993-1997, The Bureau of National Affairs, Inc.

[7 added and reserved at 60 FR 26513, May 17, 1995; added at 60 FR 26566, May 17, 1995; revised at 61 FR 59166, Nov. 20, 1996]

Appendix G to Part 75--Determination of CO_2 Emissions

1. Applicability

The procedures in this appendix may be used to estimate CO_2 mass emissions discharged to the atmosphere (in tons/day) as the sum of CO_2 emissions from combustion and, if applicable, CO_2 emissions from sorbent used in a wet flue gas desulfurization control system, fluidized bed boiler, or other emission controls.

2. Procedures for Estimating CO_2 Emissions From Combustion

Use the following procedures to estimate daily CO_2 mass emissions from the combustion of fossil fuels. The optional procedure in section 2.3 of this appendix may also be used for an affected gas-fired unit. For an affected unit that combusts any nonfossil fuels (e.g., bark, wood, residue, or refuse), either use a CO_2 continuous emission monitoring system or apply to the Administrator for approval of a unit-specific method for determining CO_2 emissions.

2.1 Use the following equation to calculate daily CO_2 mass emissions (in tons/day) from the combustion of fossil fuels. Where fuel flow is measured in a common pipe header (i.e., a pipe carrying fuel for multiple units), the owner or operator may use the procedures in section 2.1.2 of appendix D of this part for combining or apportioning emissions, except that the term "SO_2 mass emissions" is replaced with the term "CO_2 mass emissions."

$$W_{CO_2} = \frac{\left(MW_C + MW_{O_2}\right) \times W_C}{2{,}000\ MW_C} \quad \text{(Eq. G–1)}$$

Where:

Wco2=CO_2 emitted from combustion, tons/day.

MW_c=Molecular weight of carbon (12.0).

MW_{o2}=Molecular weight of oxygen (32.0).

W_c=Carbon burned, lb/day, detemined using fuel sampling and analysis and fuel feed rates. Collect at least one fule sample during each week that the unit combusts coal or oil, one sample per each shipment for diesel fuel, and one fuel sample each month the unit combusts gaseous fuels. Collect coal samples from a location in the fuel handling system that provides a sample representative of the fuel bunkered or consumed during the week. Determine the carbon content of each fuel sampling using one of the following methods: ASTM D3178-89 for coal; ASTM

Copyright 1993-1997, The Bureau of National Affairs, Inc.

D5291-92 "Standard Test Methods for Instrumental Determination of Carbon Hydrogen, and Nitrogen in Petroleum Products and Lubricants," ultimate analysis of oil, or computations based upon ASTM D3238-90 and either ASTM D2502-87 or ASTM D2503- 82 (Reapproved 1987) for oil; and computations based on ASTM D1945-91 or ASTM D1946-90 for gas. Use daily fuel feed rates from company records for all fuels and the carbon content of the most recent fuel sample under this section to determine tons of carbon per day from combustion of each fuel. (All ASTM methods are incorporated by reference under §75.6). Where more than one fuel is combusted during a calendar day, calculate total tons of carbon for the day from all fuels.

[2.1 corrected at 58 FR 40746, July 30, 1993; revised at 60 FR 26513, May 17, 1995]

2.2 For an affected coal-fired unit, the estimate of daily CO_2 mass emissions given by Equation G-1 may be adjusted to account for carbon retained in the ash using the procedures in either section 2.2.1 through 2.2.3 or section 2.2.4 of this appendix.

[2.2 corrected at 58 FR 40746, July 30, 1993; revised at 60 FR 26513, May 17, 1995]

2.2.1 Determine the ash content of the weekly sample of coal using ASTM D3174-89 "Standard Test Method for Ash in the Analysis Sample of Coal and Coke From Coal" (incorporated by reference under §75.6 of this part).

2.2.2 Sample and analyze the carbon content of the fly-ash according to ASTM D3178-89, "Standard Test Methods for Carbon and Hydrogen in the Analysis Sample of Coal and Coke" (incorporated by reference under §75.6 of this part).

2.2.3 Discount the estimate of daily CO_2 mass emissions from the combustion of coal given by Equation G-1 by the percent carbon retained in the ash using the following equation:

$$W_{NCO2} = W_{CO2} - \left(\frac{MW_{CO2}}{MW_c}\right)\left(\frac{A\%}{100}\right)\left(\frac{C\%}{100}\right) W_{COAL}$$

(Eq. G-2)

where,

W_{NCO2} = Net CO_2 mass emissions discharged to the atmosphere, tons/day.

W_{CO2} = Daily CO_2 mass emissions calculated by Equation G-1, tons/day.

MW_{C02} = Molecular weight of carbon dioxide (44.0).

MW_c = Molecular weight of carbon (12.0).

A% = Ash content of the coal sample, percent by weight.

C% = Carbon content of ash, percent by weight.

W_{COAL} = Feed rate of coal from company records, tons/day.

2.2.4 The daily CO_2 mass emissions from combusting coal may be adjusted to account for carbon retained in the ash using the following equation:

$W_{NCO2} = .99\ W_{CO2}$

(Eq. G-3)

where,

W_{NCO2} = Net CO_2 mass emissions from the combustion of coal discharged to the atmosphere,

Copyright 1993-1997, The Bureau of National Affairs, Inc.

tons/day.

.99 = Average fraction of coal converted into CO_2 upon combustion.

W_{CO2} = Daily CO_2 mass emissions from the combustion of coal calculated by Equation G-1 tons/day.

2.3 In lieu of using the procedures, methods, and equations in section 2.1 of this appendix, the owner or operator of an affected gas-fired unit as defined under §72.2 of this chapter may use the following equation and records of hourly heat input to estimate hourly CO_2 mass emissions (in tons).

(Eq. G-4)

Where:

WCO_2=CO_2 emitted from combustion, tons/hr.

F_c=Carbon-based F-factor, 1,040 scf/mmBtu for natural gas; 1,420 scf/mm/btu for crude, residual, or distillate oil.

H = Hourly heat input in mmBtu, as calculated using the procedures in section 5 of appendix F of this part.

Uf=1/385 scf CO_2/lb-mole at 14.7 psia and 68 °F.

[2.3 corrected at 58 FR 40746, July 30, 1993; revised at 60 FR 26513, May 17, 1995]

3. Procedures for Estimating CO_2 Emissions From Sorbent

When the affected unit has a wet flue gas desulfurization system, is a fluidized bed boiler, or uses other emission controls with sorbent injection, use either a CO_2 continuous emission monitoring system or an O_2 monitor and a flow monitor, or use the procedures, methods, and equations in sections 3.1 through 3.2 of this appendix to determine daily CO_2 mass emissions from the sorbent (in tons).

[3 introductory text revised at 60 FR 26513, May 17, 1995]

3.1 When limestone is the sorbent material, use the equations and procedures in either section 3.1.1 or 3.1.2 of this appendix.

3.1.1 Use the following equation to estimate daily CO_2 mass emissions from sorbent (in tons).

(Eq. G-5)

where,

SE_{CO2}=CO_2 emitted from sorbent, tons/day.

Copyright 1993-1997, The Bureau of National Affairs, Inc.

$$W_{CO_2} = \left(\frac{F_C \times H \times U_f \times MW_{CO_2}}{2000} \right) \qquad \text{(Eq. G–4)}$$

$$SE_{CO_2} = W_{CaCO_3} \; F_u \; \frac{MW_{CO_2}}{MW_{CaCO_3}}$$

W_{CaCO3}=$CaCO_3$ used, tons/day.
F_u=1.00, the calcium to sulfur stoichiometric ratio.
MW_{CO2}=Molecular weight of carbon dioxide (44).
(Eq. G-6)
where,
SE_{CO2}=CO_2 emitted from sorbent, tons/day.
MW_{CO2}=Molecular weight of carbon dioxide (44).
MW_{SO2}=Molecular weight of sulfur dioxide (64).
W_{SO2}=Sulfur dioxide removed, lb/day, as calculated below using Eq. G-7.
F_u=1.0, the calcium to sulfur stoichiometric ratio.

$$W_{SO_2} = SO_{20} \frac{\% R}{(100 - \% R)} \quad \text{(Eq. G-7)}$$

(Eq. G-7)
where:
WSO_2=Weight of sulfur dioxide removed, lb/day.
SO_{20}=SO_2 mass emissions monitored at the outlet, lb/, as calculated using the equations and procedures in section 2 of appendix F of this part.
%R=Overall percentage SO_2 emissions removal efficiency, calculated using Equations 1 through 7 in §75.15 using daily instead of annual average emission rates.

[3.1.2 corrected at 58 FR 40746, July 30, 1993; revised at 60 FR 26513, May 17, 1995]
3.2 When a sorbent material other than limestone is used, modify the equations, methods, and procedures in Section 3.1 of this appendix as follows to estimate daily CO_2 mass emissions from sorbent (in tons).
3.2.1 Determine a site-specific value for F_u, defined as the ratio of the number of moles of CO_2 released upon capture of one mole of SO_2, using methods and procedures satisfactory to the Administrator. Use this value of F_u (instead of 1.0) in either Equation G-5 or Equation G-6.
3.2.2 When using Equation G-5, replace MW_{CaCO3}, the molecular weight of calcium carbonate, with the molecular weight of the sorbent material that participates in the reaction to capture SO_2 and that releases CO_2, and replace W_{CaCO3}, the amount of calcium carbonate used (in tons/day), with the amount of sorbent material used (in tons/day).

4. Procedures for Estimating Total CO_2 Emissions

When the affected unit has a wet flue gas desulfurization system, is a fluidized bed boiler, or uses other emission controls with sorbent injection, use the following equation to obtain total daily CO_2 mass emissions (in tons) as the sum of combustion-related emissions and

Copyright 1993-1997, The Bureau of National Affairs, Inc.

sorbent-related emissions.

$W_t = W_{CO2} + SE_{CO2}$

(Eq. G-8)

where,

W_t=Estimated total CO_2 mass emissions, tons/day.

W_{CO2}=CO_2 emitted from fuel combustion, tons/day.

SE_{CO2}=CO_2 emitted from sorbent, tons/day.

[The second Equation 7 redesignated as new 8 at 61 FR 25585, May 22, 1996]

Appendix H to Part 75—Revised Traceability Protocol No. 1

This appendix consists of section 3.0.4 of the Quality Assurance Handbook for Air Pollution Measurement Systems, Vol. 3, U.S. Environmental Protection Agency (revised 6/9/87). The Quality Assurance Handbook may be obtained from the Methods Research and Development Division, MD 78-A, Atmospheric Research Exposure and Assessment Laboratory, U.S. Environmental Protection Agency, Research Triangle Park, North Carolina 27711.

3.0.4. Procedure for NBS-Traceable Certification of Compressed Gas Working Standards Used for Calibration and Audit of Continuous Source Emission Monitors (Revised Traceability Protocol No. 1)

Contents

Subsection	Title
3.0.4.0	General Information
3.0.4.1	Procedure G1: Assay and Certification of a Compressed Gas Standard Without Dilution
3.0.4.2	References

4.0 General Information

Copyright 1993-1997, The Bureau of National Affairs, Inc.

4.0.1 Purpose and Scope of the Procedure

Section 3.0.4 describes a procedure for assaying the concentration of gaseous pollutant concentration standards and certifying that the assay concentrations are traceable to an authoritative reference concentration standard. This procedure is recommended for certifying the local working concentration standards required by the pollutant monitoring regulations of 40 CFR Part 60[1,2] for the calibration and audit of continuous source emission monitors. The procedure covers certification of compressed gas (cylinder) standards for CO, CO_2, NO, NO_2, and SO_2 (Procedure G1).

4.0.2 Reference Standards

Part 60 of the monitoring regulations [1,2] require that working standards used for calibration and audit of continuous source emission monitors be traceable to either a National Bureau of Standards (NBS) gaseous Standard Reference Material (SRM or a NBS/EPA-approved Certified reference material (CRM)[3]. Accordingly, the reference standard used for assaying and certifying a working standard for these purposes must be an SRM, a CRM, or a suitable intermediate standard (see the next paragraph). SRM cylinder gas standards available from NBS are listed in Table 7.2 at the end of subsection 4.0. A current list of CRM cylinder gases and CRM vendors is available from the Quality Assurance Division (MD-77), Environmental Monitoring Systems Laboratory, U.S. EPA, Research Triangle Park, NC 27711.

The EPA regulations define a "traceable" standard as one which". . . has been compared and certified, either directly or via not more than one intermediate standard, to a primary standard such as a . . . NBS [gaseous] SRM or . . . CRM"[4,5]. Certification of a working standard directly to an SRM or CRM primary standard is, of course, preferred and recommended because of the lower error. However, an intermediate reference standard is permitted, if necessary. In particular, a *Gas Manufacturer's Intermediate Standard* (see subsection 4.0.2.1) that has been referenced directly to an SRM or a CRM according to Procedure G1 is an acceptable intermediate standard and could be used as the reference standard on that basis. However, purchasers of commercial gas standards referenced to an intermediate standard such as a GMIS should be aware that, according to the above definition, such a standard would have to be used directly for calibration or audit. Since a second intermediate standard is not permitted, such a standard could not be used as a reference standard to certify other standards.

4.0.2.1 *Gas Manufacturer's Intermediate Standard (GMIS)* . A GMIS is a compressed (cylinder) gas standard that has been assayed with direct reference to an SRM or CRM and certified according to Procedure G1, and also meets the following requirements:

1. A candidate GMIS must be assayed a minimum of three (3) times, uniformly spaced over a three (3) month period.
2. Each of the three (or more) assays must be within 1.0 percent of the mean of the three (or

Copyright 1993-1997, The Bureau of National Affairs, Inc.

more) assays.

3. The difference between the last assay and the first assay must not exceed 1.5 percent of the mean of the three (or more) assays.

4. The GMIS must be recertified every three months, and the reassay must be within 1.5 percent of the previous certified assay. The recertified concentration of the GMIS is the mean of the previous certified concentration and the reassay concentration.

4.0.2.2 *Recertification of Reference Standards*. Recertification requirements for SRMs and CRMs are specified by NBS and NBS/EPA, respectively. See 4.0.2.1 for GMIS recertification requirements.

4.0.3 Using the Procedure

The assay/certification procedure described here is carefully designed to minimize both systematic and random errors in the assay process. Therefore, the procedure should be carried out as closely as possible to the way it is described. Similarly, the assay apparatus has been specifically designed to minimize errors and should be configured as closely as possible to the design specified. Good laboratory practice should be observed in the selection of inert materials (e.g. Teflon, stainless steel, or glass, if possible) and clean, non-contaminating components for use in portions of the apparatus in contact with the candidate or reference gas concentrations.

4.0.4 Certification Documentation

Each assay/certification must be documented in a written certification report signed by the analyst and containing at least the following information:

1. Identification number (cylinder number).
2. Certified concentration of the standard, in ppm or mole percent.
3. Balance gas in the standard mixture.
4. Cylinder pressure at certification.
5. Date of the assay/certification.
6. Certification expiration date (see 4.0.6.3).
7. Identification of the reference standard used: SRM number, cylinder number, and concentration for an SRM; cylinder number and concentration for a CRM or GMIS.
8. Statement that the assay/certification was performed according to this section 3.0.4.
9. Identification of the laboratory where the standard was certified and the analyst who performed the certification.
10. Identification of the gas analyzer used for the certification, including the make, model, serial number, the measurement principle, and the date of the last multipoint calibration.
11. All analyzer readings used during the assay/certification and the calculations used to obtain the reported certified value.
12. Chronological record of all certifications for the standard.

Copyright 1993-1997, The Bureau of National Affairs, Inc.

Certification concentrations should be reported to 3 significant digits. Certification documentation should be maintained for at least 3 years.

4.0.5 Certification Label

A label or tag bearing the information described in items 1 through 9 of subsection 4.0.4 must be attached to each certified gas cylinder.

4.0.6 Assay/Certification of Compressed Gas (Cylinder) Standards

4.0.6.1 *Aging of newly-prepared gas standards.* Freshly prepared gas standard concentrations and newly filled gas cylinders must be aged before being assayed and certified. SO_2 concentrations contained in steel cylinders must be aged at least 15 days; other standards must be aged at least 4 days.

4.0.6.2 *Stability test for reactive gas standards.* Reactive gas standards, including nitric oxide (NO), nitrogen dioxide (NO_2), sulfur dioxide (SO_2), and carbon monoxide (CO), that have not been previously certified must be tested for stability as follows: Reassay the concentration at least 7 days after the first assay and compare the two assays. If the second assay differs from the first assay by 1.5% or less, the cylinder may be considered stable, and the mean of the two assays should be reported as the certified concentration. Otherwise, age the cylinder for a week or more and repeat the test, using the second and third assays as if they were the first and second assays. Cylinders that are not stable may not be sold and/or used for calibration or audit purposes.

4.0.6.3 *Recertification of compressed gas standards.* Compressed gas standards must be recertified according to this section 3.0.4 within the time limits specified in Table 7.1[3,6,7]. The reassay concentration must be within 5% of the previous certified concentration. If not, the cylinder must be retested for stability (subsection 4.0.6.2). The certified concentration of a recertified standard should be reported as the mean of all assays, unless a clear trend or substantial change suggests that previous assays are no longer valid.

Table 7.1.--Recertification Limits for Compressed Gas Standards

Pollutant	Balance gas[1(34)]	Concentration range	Maximum months unti recertification for cylinder material: Passi-vated Alu-minium	Other
Carbon monoxide.....	N_2 or air.....	≥8 ppm.....	36	6
Nitric oxide.....	N_2.....	≥5 ppm.....	24	6
Sulfur dioxide.....	N_2 or air.....	≥50--499 ppm.....	24	6
Sulfur dioxide.....	N_2 or air.....	≥500 ppm.....	36	6
Oxides of nitrogen...	Air.....	≥100 ppm.....	24	6

Copyright 1993-1997, The Bureau of National Affairs, Inc.

the candidate concentration point then must not exceed 0.8 percent of the value of the reference concentration. This latter specification may allow the use of an analyzer having greater nonlinearity when the reference and candidate concentrations are nearly the same.

For analyzers having an inherently non- linear response, the response can usually be linearized with a simple mathematical transformation of the response values, such as R′=square root(R) or R′=log(R), where R′ is the transformed response value and R is the actual analyzer response value. Using the transformed response values, the multipoint calibration should meet one of the above linearity requirements as well as the requirements for intercept and correlation coefficient given in subsection 4.0.7.2.

4.0.8 Zero Gas

Zero gas used for dilution of any candidate or reference standard should be clean, dry, zero-grade air or nitrogen containing a concentration of the pollutant of interest equivalent to less than 0.5 percent of the analyzer's upper range limit concentration. The zero gas also should contain no contaminant that causes a detectable response on the analyzer or that suppresses or enhances the analyzer's response to the pollutant. The oxygen content of zero air should be the same as that of ambient air.

4.0.9 Accuracy Assessment of Commercially Available Standards

Periodically, the USEPA will assess the accuracy of commercially available compressed gas standards that have been assayed and certified according to this section 3.0.4. Accuracy will be assessed by EPA audit analysis of representative actual commercial standards obtained via an anonymous agent. The accuracy audit results, identifying the actual gas manufacturers or vendors, will be published as public information.

Table 7.2.--NBS SRM Reference Gases

SRM No.	Type	Nominal concentration
2627	NO/N_2	5 ppm.
2628	NO/N_2	10 ppm.
2629	NO/N_2	20 ppm.
1683b	NO/N_2	50 ppm.
1684b	NO/N_2	100 ppm.
1685b	NO/N_2	250 ppm.

Copyright 1993-1997, The Bureau of National Affairs, Inc.

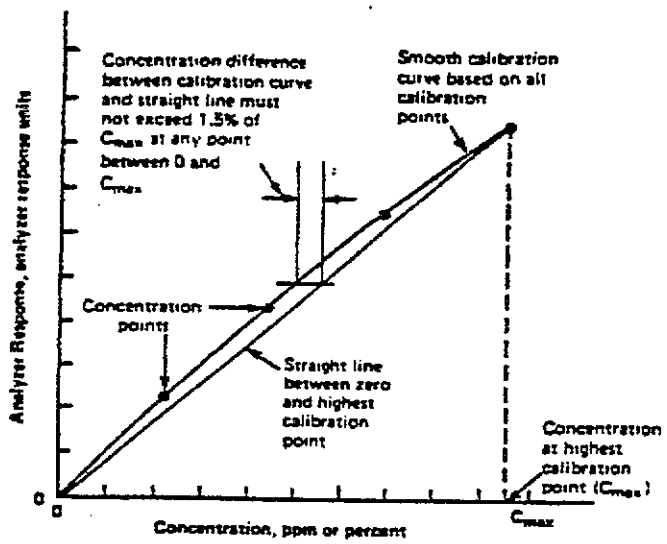

a) General linearity requirement

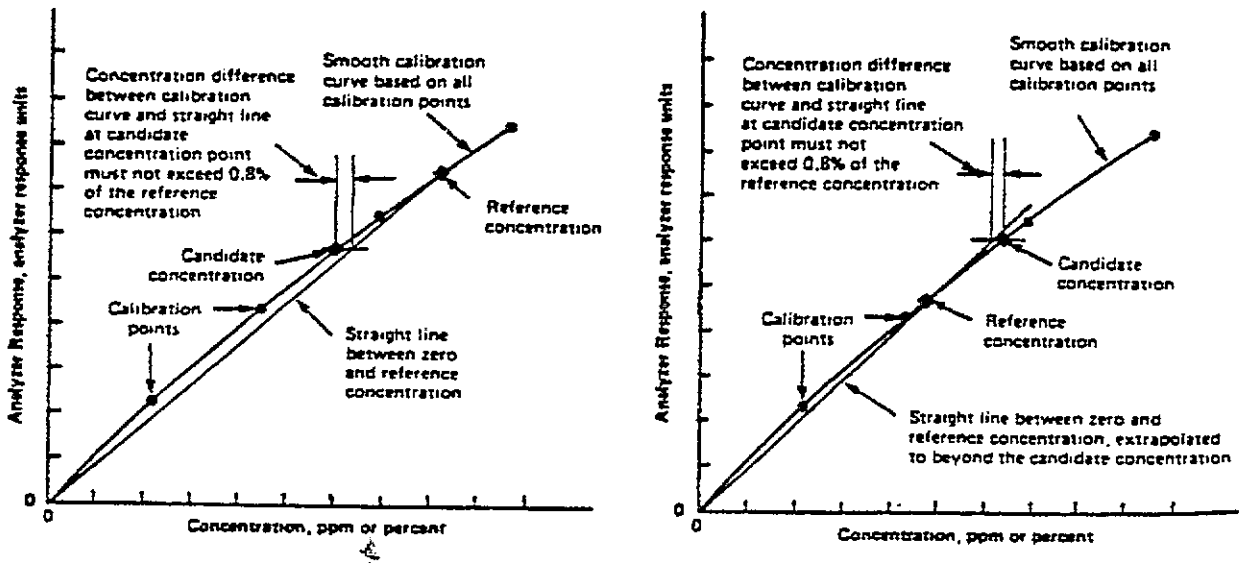

b) Alternative linearity requirement

1686b	NO/N_2	500 ppm.
1687b	NO/N_2	1000 ppm.
2630	NO/N_2	1500 ppm.
2631	NO/N_2	3000 ppm.
2653	$NO/_2Air$	250 ppm.
2654	$NO/_2Air$	500 ppm.
2655	$NO/_2Air$	1000 ppm.
2658	$NO/_2Air$	2500 ppm.
2612a	CO/Air	10 ppm.
2613a	CO/Air	20 ppm.
2614a	CO/Air	45 ppm.
1677c	CO/N_2	10 ppm.
2635	CO/N_2	25 ppm.
1678c	CO/N_2	50 ppm.
1679c	CO/N_2	100 ppm.
2636	CO/N_2	250 ppm.
1680c	CO/N_2	500 ppm.
1681c	CO/N_2	1000 ppm.
2637	CO/N_2	2500 ppm.
2638	CO/N_2	5000 ppm.
2639	CO/N_2	1 percent.
2640	CO/N_2	2 percent.
2641	CO/N_2	4 percent.
2642	CO/N_2	8 percent.
2657	O_2/N_2	2 percent.
2658	O_2/N_2	10 percent.
2659	O_2/N_2	21 percent.
1693	SO_2/N_2	50 ppm.
1694	SO_2/N_2	100 ppm.
1661a	SO_2/N_2	500 ppm.
1662a	SO_2/N_2	1000 ppm.
1663a	SO_2/N_2	1500 ppm.
1664a	SO_2/N_2	2500 ppm.
1696	SO_2/N_2	3500 ppm.
1670	CO_2/Air	330 ppm.
1671	CO_2/Air	340 ppm.
1672	CO_2/Air	350 ppm.
2632	CO_2/N_2	300 ppm.
2633	CO_2/N_2	400 ppm.
2634	CO_2/N_2	800 ppm.
2629a	CO_2/N_2	0.5 percent.
2720a	CO_2/N_2	1.0 percent.
2621a	CO_2/N_2	1.5 percent.
2622a	CO_2/N_2	2.0 percent.
2623a	CO_2/N_2	2.5 percent.
2624a	CO_2/N_2	3.0 percent.

Copyright 1993-1997, The Bureau of National Affairs, Inc.

2625a	CO_2/N_2	3.5 percent.
2626a	CO_2/N_2	4.0 percent.
1674b	CO_2/N_2	7.0 percent.
1675b	CO_2/N_2	14.0 percent.
1665b	C_3H_3/Air	3 ppm.
1666b	C_3H_3/Air	10 ppm.
1667b	C_3H_3/Air	50 ppm.
1668b	C_3H_3/Air	100 ppm.
1669b	C_3H_3/Air	500 ppm.
2643	C_3H_3/Air	100 ppm.
2644	C_3H_3/Air	250 ppm.
2645	C_3H_3/Air	500 ppm.
2646	C_3H_3/Air	1000 ppm.
2647	C_3H_3/Air	2500 ppm.
2648	C_3H_3/Air	5000 ppm.
2649	C_3H_3/Air	1 percent.
2650	C_3H_3/Air	2 percent.

NBS-SRM cylinders contain approximately 870 liters of gas at STP. For availabilit

4.1 **Procedure G1:** Assay and Certification of a Compressed Gas Standard Without Dilution

4.1.1 Applicability

This procedure may be used to assay the concentration of a candidate compressed gas (cylinder) pollutant standard, based on the concentration of a compressed gas (cylinder) reference standard of the same pollutant compound, and certify that the assayed concentration thus established for the candidate standard is traceable to the reference standard. The procedure employs a pollutant gas analyzer to compare the candidate and reference gas concentrations by direct measurement—without dilution of either gas—to minimize assay error.

4.1.2 Limitations

1. The concentration of the candidate gas standard must be between 0.3. and 1.3 times the concentration of the reference gas standard.
2. The analyzer must have a calibrated range capable of directly measuring both the candidate and the reference gas concentrations.
3. The analyzer's response (or transformed response) must be linear with respect to concentration.
4. The balance gas in both the candidate and reference standards must be identical, unless it can be shown that the analyzer is insensitive to any difference in the balance gases.

Copyright 1993-1997, The Bureau of National Affairs, Inc.

5. A source of clean, dry zero gas is required.

4.1.3 Assay Apparatus

Figure G1 illustrates the relatively simple assay apparatus. The configuration is designed to allow convenient routing of the zero gas and undiluted samples of the reference gas and candidate gases, in turn, to the analyzer for measurement, as selected by three-way valves V1 and V2. Pressure regulators and needle valves (V3 and V4) control the individual gas flows. The pollutant concentrations are delivered to the analyzer via a vented tee, which discharges excess flow and insures that the assay concentrations sampled by the analyzer are always at a fixed (atmospheric) pressure. A small, uncalibrated rotameter monitors the vent flow to verify that the total gas flow rate exceeds the sample flow rate demand of the analyzer so that no room air is admitted through the vent. Valves V1 and V2 could be replaced by a single four-way valve (with 3 inputs and 1 output) or by manually moving the output connection to each of the gases as needed. See also subsection 4.0.3.

4.1.4 Analyzer

See subsection 4.0.7.1. The pollutant gas analyzer must have a linear response function and a calibrated range capable of measuring the full concentration of both the candidate and the reference gas standards directly, without dilution. It must have good resolution (readability), good precision, a stable response, and low output signal noise. In addition, the analyzer must have good specificity for the pollutant of interest so that it has no detectable response to any contaminant that may be contained in either the candidate or reference gas. If the candidate and reference gases contain dissimilar balance gases (air versus nitrogen or different proportions of oxygen in the balance air, for example), the analyzer must be proven to be insensitive to the different balance gases. This may be accomplished by showing no difference in analyzer response when measuring pollutant concentrations diluted with identical flow rates of the two balance gases.

The analyzer should be connected to a suitable, precision chart recorder or other data acquisition device to facilitate graphical observation and documentation of the analyzer responses obtained during the assay.

4.1.5 Analyzer Calibration

4.1.5.1 *Multipoint calibration.* See subsections 4.0.7.2 and 4.0.7.4.

4.1.5.2 *Calibration range.* The calibrated range of the analyzer must include both the candidate and reference gas concentrations, such that the higher concentration does not exceed 97 percent of the upper range limit, and the lower concentration is not below 25 percent of the upper range

Copyright 1993-1997, The Bureau of National Affairs, Inc.

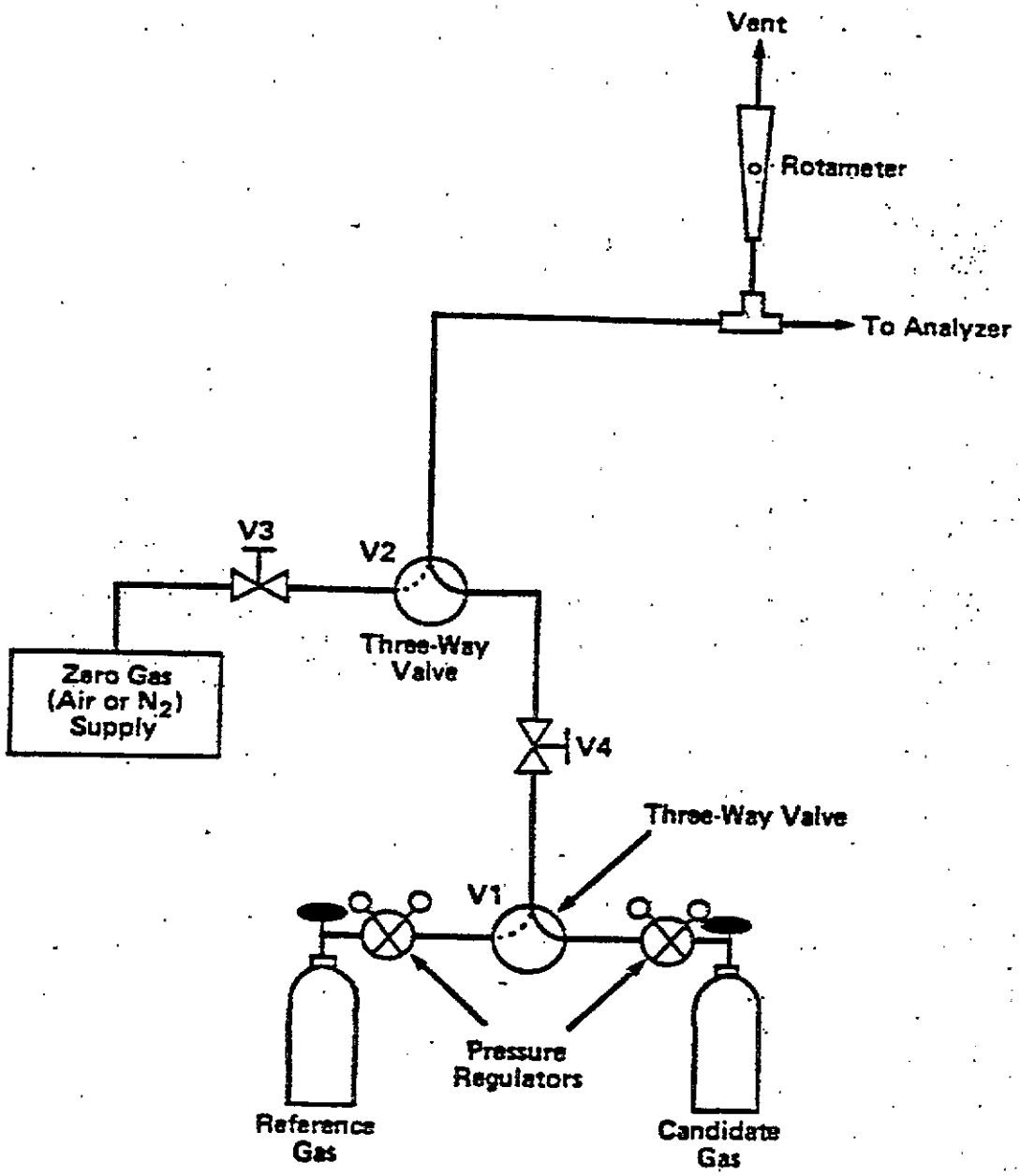

Figure G1. Suggested assay apparatus for Procedure G1.

limit (assuming a lower range limit of zero). Within these limits, select a calibrated analyzer range that will produce the highest analyzer responses.

4.1.5.3 *Linearity.* The direct ratio assay technique used in this procedure requires that the analyzer have a linear response to concentration (see subsection 4.0.7.5).
High-concentration-range analyzers of the type that are required for this procedure may not be inherently linear, but they usually have a predictable, non-linear response characteristic that can be mathematically transformed to produce a sufficiently linear response characteristic suitable for use in this procedure. Any such response transformation should be verified by using it for the multipoint calibration. Caution should be exercised in using a transformed response curve because physical zero or span adjustments to the analyzer may produce unexpected effects on the transformed characteristic.

4.1.5.4 *Zero and span adjustment.* See subsections 4.0.7.3 and 4.0.7.4. Prior to carrying out the assay/certification procedure, check the calibration of the analyzer and, if necessary, adjust the analyzer's zero and span controls to reestablish the response characteristic determined at the most recent multipoint calibration. Allow the analyzer to stabilize for an hour or more after any zero or span adjustment. If there is any doubt that a transformed response characteristic is still linear following a zero or span adjustment, verify linearity with a multipoint calibration (subsection 4.0.7.2) using at least 3 known pollutant concentrations, including zero.

4.1.6 Assay Gases

4.1.6.1 *Candidate gas standard.* See subsections 4.0.6 and 4.1.2.

4.1.6.2 *Reference gas standard.* See subsections 4.0.2, 4.1.2, and 4.0.6.4. Select a reference standard such that the concentration of the candidate gas is not more than 30 percent above nor less than 70 percent below the concentration of the standard.

4.1.6.3 *Zero gas.* See subsection 4.0.8. The zero gas should match the balance gas used in the cylinder concentrations.

4.1.7 Assay Procedure

1. Verify that the assay apparatus is properly configured, as described in subsection 4.1.3 and shown in Figure G1.

2. Verify that the linearity of the analyzer has been checked within the last 3 months (see subsections 4.0.7.2, 4.0.7.5, and 4.1.4), that the zero and span are adjusted correctly (subsection 4.0.7.3), that the candidate and reference gas concentrations are within 25 and 97 percent of the upper range limit of the calibrated measurement range of the analyzer, and that the analyzer is operating stably.

3. Adjust the flow rates of the three gases (reference, candidate, and zero) to approximately the same value that will provide enough flow for the analyzer and sufficient excess to assure that no ambient air will be drawn into the vent.

Copyright 1993-1997, The Bureau of National Affairs, Inc.

4. Conduct a triad of measurements with the analyzer. Each triad consists of a measurement of the zero gas concentration, a measurement of the reference gas concentration, and a measurement of the candidate gas concentration. Use valves V1 and V2 to select each of the three concentrations for measurement. For each measurement, allow ample time for the analyzer to achieve a stable response reading. Record the stable analyzer response for each measurement, using the same response units (volt, millivolts, percent of scale, etc.) used for the multipoint calibration and any transformation of the response readings necessary for linearity. Do not translate the response readings to concentration values via the calibration curve (see the footnote following Equation G1). Do not make any zero, span, or other physical adjustments to the analyzer during the triad of measurements.

5. Conduct at least 2 additional measurement triads, similar to step 4 above. However, for these subsequent triads, change the order of the three measurements (e.g. measure reference gas, zero gas, candidate gas for the second triad and zero gas, candidate gas, reference gas for the third triad, etc.).

6. If any one or more of the measurements of a triad is invalid or abnormal for any reason, discard all three measurements of the triad and repeat the triad.

7. For each triad of measurements, calculate the assay concentration of the candidate gas as follows:

$$C_C = C_r \frac{R_C - R_Z}{R_r - R_Z}$$

Equation G1

where:

C_c=Assay concentration of the candidate gas standard, ppm or percent;

C_r=Concentration of the reference gas standard, ppm or percent;

R_c=Stable response reading of the analyzer for the candidate gas, analyzer response units;*

R_z=Stable response reading of the analyzer for the zero gas, analyzer response units;*

R_r=Stable response reading of the analyzer for the reference gas, analyzer response units.*

*Analyzer response units are the units used to express the *direct* response readings of the analyzer, such as volts, millivolts, percent of scale, etc. DO NOT convert these direct response readings to concentration units with the multipoint calibration curve or otherwise adjust these readings except for transformation necessary to achieve response linearity.

8. Calculate the mean of the 3 (or more) valid assays. Calculate the percent difference of each assay from the mean. If any one of the assay values differs from the mean by more than 1.5%, discard that assay value and conduct another triad of measurements to obtain another assay value. When at least 3 assay values all agree within 1.5% of their mean, report the mean value as the certified concentration of the candidate gas standard. For newly-prepared reactive standards, a reassay at least 7 days later is required to check the stability of the standard; see subsection 4.0.6.2.

Copyright 1993-1997, The Bureau of National Affairs, Inc.

4.1.8 Stability Test for Newly-Prepared Standards

See subsections 4.0.6.1 and 4.0.6.2.

4.1.9 Certification Documentation

See subsections 4.0.4 and 4.0.5.

4.1.10 Recertification Requirements

See subsections 4.0.6.3 and 4.0.6.4.

4.2 References

1. *Code of Federal Regulations*, Title 40, part 60, "Standards of Performance for New Stationary Sources," Appendix A, Method 20 (1982).
2. Standards of Performance for New Stationary Sources; Quality Assurance Requirements for Gaseous Continuous Emission Monitoring Systems Used for Compliance Determination, promulgated in the **Federal Register**, June 4, 1987, pp. 21003-21010.
3. "A Procedure for Establishing Traceability of Gas Mixtures to Certain National Bureau of Standards Standard Reference Materials. EPA-600/7-81-010. Joint publication by NBS and EPA, May 1981. Available from the U.S. Environmental Protection Agency, Environmental Monitoring Systems Laboratory (MD- 77), Research Triangle Park, NC 27711.
4. *Code of Federal Regulation*, Title 40, part 50, "National Ambient Air Quality Measurement Methodology".
5. *Code of Federal Regulations*, Title 40, part 58, "Ambient Air Quality Surveillance," Appendixes A and B.
6. Shores, R.C. and F. Smith, "Stability Evaluation of Sulfur Dioxide, Nitric Oxide, and Carbon Monoxide Gases in Cylinders. NTIS No. PB 85-122646. Available from the National Technical Information Service, 5285 Port Royal Road, Springfield, VA 22161.
7. Method 6A and 6B, "Determination of Sulfur Dioxide, Moisture, and Carbon Dioxide Emissions from Fossil Fuel Combustion Sources," *Quality Assurance Handbook for Air Pollution Measurement Systems*, Volume III, Section 3.13.8, July 1986. Available from the U.S. Environmental Protection Agency, Center for Environmental Research Information, Cincinnati, OH 45268.
8. "List of Designated Reference and Equivalent Methods." Current edition available from the U.S. Environmental Protection Agency, Environmental Monitoring Systems Laboratory, Quality Assurance Division (MD-77), Research Triangle Park, NC 27711.

Copyright 1993-1997, The Bureau of National Affairs, Inc.

Appendix I of Part 75 [Reserved]

Appendix J to Part 75—Compliance Dates for Revised Recordkeeping Requirements and Missing Data Procedures

[Appendix J added at 60 FR 26513, May 17, 1995]

1. Recordkeeping Requirements

The owner or operator shall meet the recordkeeping requirements of subpart F of this part by following either §§75.50 , 75.51 and 75.52 or §§75.54, 75.55 and 75.56, from July 17, 1995 through December 31, 1995. On or after January 1, 1996, the owner or operator shall meet the recordkeeping requirements of subpart F of this part by meeting the requirements of §§75.54, 75.55, and 75.56 .

2. Missing Data Substitution Procedures

The owner or operator shall meet the missing data substitution requirements for carbon dioxide (CO_2) and heat input by following either §§75.35 and 75.36 or sections 4.3.1 through 4.3.3, section 4.4.3 and sections 5.3 through 5.4 of appendix F of this part from July 17, 1995 through December 31, 1995. The owner or operator shall meet the missing data substitution requirements for fuel flowmeters in appendix D of this part by following either section 2.4.3.1 or sections 2.4.3.2 and 2.4.3.3 of appendix D of this part from July 17, 1995 through December 31, 1995. On or after January 1, 1996, the owner or operator shall meet the missing data substitution requirements for CO_2 concentration, that input and fuel flowmeters by meeting the requirements of §§75.35 and 75.36 and sections 2.4.3.2 through 2.4.3.3 of appendix D of this part .

Copyright 1993-1997, The Bureau of National Affairs, Inc.

Endnotes

1 **(Popup)**

* =Quality-assured, monitor operating hours.

2 **(Popup)**

* =Quality-assured, monitor operating hours.

3 **(Popup)**

[1] Where unit with add-on emission controls can demonstrate that the controls are operating properly, as provided in §75.34, the unit may, upon approval, use the maximum controlled emission rate from the previous 720 operating hours.

4 **(Popup)**

* =Quality-assured, monitor operating hours.

5 **(Popup)**

* =Quality-assured, monitor operating hours.

6 **(Popup)**

* =Quality-assured, monitor operating hours.

7 **(Popup)**

* =Quality-assured, monitor operating hours.

8 **(Popup)**

* =Quality-assured, monitor operating hours.

9 **(Popup)**

[1] Where unit with add-on emission controls can demonstrate that the controls are operating properly, as provided in §75.34, the unit may, upon approval, use the maximum controlled emission rate from the previous 720 operating hours.

10 **(Popup)**

* =Quality-assured, monitor operating hours.

Copyright 1993-1997, The Bureau of National Affairs, Inc.

11 (Popup)

[c] Make sure that RM and M data are on a consistent basis, either wet or dry.

12 (Popup)

[c] Make sure that RM and M data are on a consistent basis, either wet or dry.

13 (Popup)

[a] RM means 'reference method data.'

14 (Popup)

[b] M means 'monitora data.'

15 (Popup)

[a] RM means 'reference method data.'

16 (Popup)

[b] M means 'monitora data.'

17 (Popup)

* Make sure that RM and M data are on a consistent basis, either wet or dry.

18 (Popup)

* Make sure that RM and M data are on a consistent basis, either wet or dry.

19 (Popup)

* Make sure that RM and M data are on a consistent basis, either wet or dry.

20 (Popup)

[a] Specify units; ppm, lb/decf,mg/dscm.

21 (Popup)

* For monitors on bypass stack/duct, bypass operating days or quarters, only

22 (Popup)

* For monitors on bypass stack/duct, bypass operating days or quarters, only

23 (Popup)

Copyright 1993-1997, The Bureau of National Affairs, Inc.

* For monitors on bypass stack/duct, bypass operating days or quarters, only

24 **(Popup)**

[1] Conduct annually, if monitor meets accuracy requirements to qualify for less frequent testing.

25 **(Popup)**

[2] Conduct 3-load RATAs annually, if requirements to qualify for less frequent testing are met.

26 **(Popup)**

[1] For monitors on bypass stack/duct, bypass operating quarters, not to exceed two calendar years. For monitors on peaking units, unit operating quarters, not to exceed two calendar years.

27 **(Popup)**

[1] For monitors on bypass stack/duct, bypass operating quarters, not to exceed two calendar years. For monitors on peaking units, unit operating quarters, not to exceed two calendar years.

28 **(Popup)**

[2] The difference between monitor and reference method mean values; low emitters or low flow, only.

29 **(Popup)**

[2] The difference between monitor and reference method mean values; low emitters or low flow, only.

30 **(Popup)**

[3] Conduct 3-load RATAs annually, if requirements to qualify for less frequent testing are met.

31 **(Popup)**

[2] The difference between monitor and reference method mean values; low emitters or low flow, only.

32 **(Popup)**

[3] Conduct 3-load RATAs annually, if requirements to qualify for less frequent testing are

Copyright 1993-1997, The Bureau of National Affairs, Inc.

met.

33 (Popup)

[2] The difference between monitor and reference method mean values; low emitters or low flow, only.

34 (Popup)

[1] When used as a balance gas, 'air' is defined as a mixture of O_2 and N_2 where the minimum concentration of O_2 is 10% and the concentration of N_2 is greater than 60%.

35 (Popup)

[2] This protocol may be used to assay and certify individual components of multicomponent standards, provided that none of the components interferes with the analysis of other components and provided that individual components must not react with each other or with the balance gas. A multicomponent standard can be certified for a period of time equal to that of its most briefly certifiable component. For example, a standard containing 250 ppm sulfur dioxide and 100 ppm carbon monoxide in nitrogen can be certified for 24 months because the shortest certification period is 24 months.

36 (Popup)

[3] This protocol may be used for the certification of standards with concentrations that may be lower than those listed in Table 7.1. The initial certification period for such a lower concentration standard is 6 months. After this period, the standards may be recertified. If the recertification demonstrates that the standard is not unstable, the second certification period for this lower concentration standard is the same time period as indicated for the corresponding concentration standard listed in Table 7.1.

Copyright 1993-1997, The Bureau of National Affairs, Inc.

CHAPTER I—ENVIRONMENTAL PROTECTION AGENCY

SUBCHAPTER C—AIR PROGRAMS

PART 76—ACID RAIN NITROGEN OXIDES EMISSION REDUCTION PROGRAM

Proposed Regulation(s) Preamble(s) APC Analysis

HISTORY: 40 CFR 76; 59 FR 13563,Mar. 22, 1994; Revised at 60 FR 18761, April 13, 1995; amended at 61 FR 67112, Dec. 19, 1996; corrected at 62 FR 3464, Jan. 23, 1997

AUTHORITY:
42 U.S.C. 7601 and 7651, *et seq.*

[Amended at 61 FR 67162, Dec. 19, 1996]

40 CFR 76.1 Applicability.

(a) Except as provided in paragraphs (b) through (d) of this section, the provisions apply to each coal-fired utility unit that is subject to an Acid Rain emissions limitation or reduction requirement for SO_2 under Phase I or Phase II pursuant to sections 404, 405, or 409 of the Act.

(b) The emission limitations for NO_X under this part apply to each affected coal-fired utility unit subject to section 404(d) or 409(b) of the Act on the date the unit is required to meet the Acid Rain emissions reduction requirement for SO_2.

(c) The provisions of this part apply to each coal-fired substitution unit or compensating unit, designated and approved as a Phase I unit pursuant to §§72.41 or 72.43 of this chapter as follows:

(1) A coal-fired substitution unit that is designated in a substitution plan that is approved and active as of January 1, 1995 shall be treated as a Phase I coal-fired utility unit for purposes of this part. In the event the designation of such unit as a substitution unit is terminated after December 31, 1995, pursuant to §72.41 of this chapter and the unit is no longer required to meet Phase I SO_2 emissions limitations, the provisions of this part (including those applicable in Phase I) will continue to apply.

Copyright 1993-1997, The Bureau of National Affairs, Inc.

(2) A coal-fired substitution unit that is designated in a substitution plan that is not approved or not active as of January 1, 1995, or a coal-fired compensating unit, shall be treated as a Phase II coal-fired utility unit for purposes of this part.

(d) The provisions of this part for Phase I units apply to each coal-fired transfer unit governed by a Phase I extension plan, approved pursuant to §72.42 of this chapter, on January 1, 1997. Notwithstanding the preceding sentence, a coal-fired transfer unit shall be subject to the Acid Rain emissions limitations for nitrogen oxides beginning on January 1, 1996 if, for that year, a transfer unit is allocated fewer Phase I extension reserve allowances than the maximum amount that the designated representative could have requested in accordance with §72.42(c)(5) of this chapter (as adjusted under §72.42(d) of this chapter) unless the transfer unit is the last unit allocated Phase I extension reserve allowances under the plan.

40 CFR 76.2 Definitions.

All terms used in this part shall have the meaning set forth in the Act, in §72.2 of this chapter, and in this section as follows:

*Alternative contemporaneous annual emission limitation*means the maximum allowable NO_X emission rate (on a lb/mmBtu, annual average basis) assigned to an individual unit in a NO_X emissions averaging plan pursuant to §76.10.

Alternative technology means a control technology for reducing NO_X emissions that is outside the scope of the definition of low NO_X burner technology. Alternative technology does not include overfire air as applied to wall-fired boilers or separated overfire air as applied to tangentially fired boilers.

*Approved clean coal technology demonstration project*means a project using funds appropriated under the Department of Energy's "Clean Coal Technology Demonstration Program," up to a total amount of $2,500,000,000 for commercial demonstration of clean coal technology, or similar projects funded through appropriations for the Environmental Protection Agency. The Federal contribution for a qualifying project shall be at least 20 percent of the total cost of the demonstration project.

Arch-fired boiler means a dry bottom boiler with circular burners, or coal and air pipes, oriented downward and mounted on waterwalls that are at an angle significantly different from the horizontal axis and the vertical axis. This definition shall include only the following units: Holtwood unit 17, Hunlock unit 6, and Sunbury units 1A, 1B, 2A, and 2B. This definition shall exclude dry bottom turbo fired boilers.

[Added at 61 FR 67162, Dec. 19, 1996]

Cell burner boiler means a wall-fired boiler that utilizes two or three circular burners combined into a single vertically oriented assembly that results in a compact, intense flame. Any low NO_X retrofit of a cell burner boiler that reuses the existing cell burner, close-coupled wall opening configuration would not change the designation of the unit as a cell burner boiler.

Coal-fired utility unit means a utility unit in which the combustion of coal (or any coal-derived

Copyright 1993-1997, The Bureau of National Affairs, Inc.

fuel) on a Btu basis exceeds 50.0 percent of its annual heat input during the following calendar year: for Phase I units, in calendar year 1990; and, for Phase II units, in calendar year 1995 or, for a Phase II unit that did not combust any fuel that resulted in the generation of electricity in calendar year 1995, in any calendar year during the period 1990-1995. For the purposes of this part, this definition shall apply notwithstanding the definition in §72.2 of this chapter.

[Amended at 61 FR 67162, Dec. 19, 1996]

Combustion controls means technology that minimizes NO_X formation by staging fuel and combustion air flows in a boiler. This definition shall include low NO_X burners, overfire air, or low NO_X burners with overfire air.

[Added at 61 FR 67162, Dec. 19, 1996]

Cyclone boiler means a boiler with one or more water-cooled horizontal cylindrical chambers in which coal combustion takes place. The horizontal cylindrical chamber(s) is (are) attached to the bottom of the furnace. One or more cylindrical chambers are arranged either on one furnace wall or on two opposed furnace walls. Gaseous combustion products exiting from the chamber(s) turn 90 degrees to go up through the boiler while coal ash exits the bottom of the boiler as a molten slag.

Demonstration period means a period of time not less than 15 months, approved under §76.10, for demonstrating that the affected unit cannot meet the applicable emission limitation under §§76.5, 76.6, or 76.7 and establishing the minimum NO_X emission rate that the unit can achieve during long-term load dispatch operation.

Dry bottom means the boiler has a furnace bottom temperature below the ash melting point and the bottom ash is removed as a solid.

Economizer means the lowest temperature heat exchange section of a utility boiler where boiler feed water is heated by the flue gas.

Flue gas means the combustion products arising from the combustion of fossil fuel in a utility boiler.

Group 1 boiler means a tangentially fired boiler or a dry bottom wall-fired boiler (other than a unit applying cell burner technology).

Group 2 boiler means a wet bottom wall-fired boiler, a cyclone boiler, a boiler applying cell burner technology, a vertically fired boiler, an arch-fired boiler, or any other type of utility boiler (such as a fluidized bed or stoker boiler) that is not a Group 1 boiler.

*Low NO_X burners*and *low NO_X burner technology* means commercially available combustion modification NO_X controls that minimize NO_X formation by introducing coal and its associated combustion air into a boiler such that initial combustion occurs in a manner that promotes rapid coal devolatilization in a fuel-rich (i.e., oxygen deficient) environment and introduces additional air to achieve a final fuel-lean (i.e., oxygen rich) environment to complete the combustion process. This definition shall include the staging of any portion of the combustion air using air nozzles or registers located inside any waterwall hole that includes a burner. This definition shall exclude the staging of any portion of the combustion air using air nozzles or ports located outside any

Copyright 1993-1997, The Bureau of National Affairs, Inc.

waterwall hole that includes a burner (commonly referred to as NO_X ports or separated overfire air ports).

Maximum Continuous Steam Flow at 100% of Load means the maximum capacity of a boiler as reported in item 3 (Maximum Continuous Steam Flow at 100% Load in thousand pounds per hour), Section C (design parameters), Part III (boiler information) of the Department of Energy's Form EIA-767 for 1995.

[Added at 61 FR 67162, Dec. 19, 1996]

Non-plug-in combustion controls means the replacement, in a cell burner boiler, of the portions of the waterwalls containing the cell burners by new portions of the waterwalls containing low NO_X burners or low NO_X burners with overfire air.

[Added at 61 FR 67162, Dec. 19, 1996]

Operating period means a period of time of not less than three consecutive months and that occurs not more than one month prior to applying for an alternative emission limitation demonstration period under §76.10, during which the owner or operator of an affected unit that cannot meet the applicable emission limitation:

(1) Operates the installed NO_X emission controls in accordance with primary vendor specifications and procedures, with the unit operating under normal conditions; and

(2) records and reports quality-assured continuous emission monitoring (CEM) and unit operating data according to the methods and procedures in part 75 of this chapter.

Plug-in combustion controls means the replacement, in a cell burner boiler, of existing cell burners by low NO_X burners or low NO_X burners with overfire air.

[Added at 61 FR 67162, Dec. 19, 1996]

Primary vendor means the vendor of the NO_X emission control system who has primary responsibility for providing the equipment, service, and technical expertise necessary for detailed design, installation, and operation of the controls, including process data, mechanical drawings, operating manuals, or any combination thereof.

Reburning means reducing the coal and combustion air to the main burners and injecting a reburn fuel (such as gas or oil) to create a fuel-rich secondary combustion zone above the main burner zone and final combustion air to create a fuel-lean burnout zone. The formation of NO_X is inhibited in the main burner zone due to the reduced combustion intensity, and NO_X is destroyed in the fuel-rich secondary combustion zone by conversion to molecular nitrogen.

Selective catalytic reduction means a noncombustion control technology that destroys NO_X by injecting a reducing agent (e.g., ammonia) into the flue gas that, in the presence of a catalyst (e.g., vanadium, titanium, or zeolite), converts NO_X into molecular nitrogen and water.

Selective noncatalytic reduction means a noncombustion control technology that destroys NO_X by injecting a reducing agent (e.g., ammonia, urea, or cyanuric acid) into the flue gas, downstream of the combustion zone that converts NO_X to molecular nitrogen, water, and when urea or cyanuric acid are used, to carbon dioxide (CO_2).

Copyright 1993-1997, The Bureau of National Affairs, Inc.

Stoker boiler means a boiler that burns solid fuel in a bed, on a stationary or moving grate, that is located at the bottom of the furnace.

Tangentially fired boiler means a boiler that has coal and air nozzles mounted in each corner of the furnace where the vertical furnace walls meet. Both pulverized coal and air are directed from the furnace corners along a line tangential to a circle lying in a horizontal plane of the furnace.

Turbo-fired boiler means a pulverized coal, wall-fired boiler with burners arranged on walls so that the individual flames extend down toward the furnace bottom and then turn back up through the center of the furnace.

Vertically fired boiler means a dry bottom boiler with circular burners, or coal and air pipes, oriented downward and mounted on waterwalls that are horizontal or at an angle. This definition shall include dry bottom roof-fired boilers and dry bottom top-fired boilers, and shall exclude dry bottom arch-fired boilers and dry bottom turbo-fired boilers.

[Added at 61 FR 67162, Dec. 19, 1996]

Wall-fired boiler means a boiler that has pulverized coal burners arranged on the walls of the furnace. The burners have discrete, individual flames that extend perpendicularly into the furnace area.

Wet bottom means that the ash is removed from the furnace in a molten state. The term "wet bottom boiler" shall include: wet bottom wall-fired boilers, including wet bottom turbo-fired boilers; and wet bottom boilers otherwise meeting the definition of vertically fired boilers, including wet bottom arch-fired boilers, wet bottom roof-fired boilers, and wet bottom top-fired boilers. The term "wet bottom boiler" shall exclude cyclone boilers and tangentially fired boilers.

[Revised at 61 FR 67162, Dec. 19, 1996]

40 CFR 76.3 General Acid Rain Program provisions.

The following provisions of part 72 of this chapter shall apply to this part:

(a) §72.2 (Definitions);

(b) §72.3 (Measurements, abbreviations, and acronyms);

(c) §72.4 (Federal authority);

(d) §72.5 (State authority);

(e) §72.6 (Applicability);

(f) §72.7 (New unit exemption);

(g) §72.8 (Retired units exemption);

(h) §72.9 (Standard requirements);

(i) §72.10 (Availability of information); and

Copyright 1993-1997, The Bureau of National Affairs, Inc.

(j) §72.11 (Computation of time).

In addition, the procedures for appeals of decisions of the Administrator under this part are contained in part 78 of this chapter.

40 CFR 76.4 Incorporation by reference.

(a) The materials listed in this section are incorporated by reference in the sections noted. These incorporations by reference (IBR's) were approved by the Director of the Federal Register in accordance with 5 U.S.C. 552(a) and 1 CFR part 51. These materials are incorporated as they existed on the date of approval, and notice of any change in these materials will be published in the **Federal Register**. The materials are available for purchase at the corresponding address noted below and are available for inspection at the Office of the Federal Register, 800 North Capitol St., NW., 7th Floor, Suite 700, Washington, DC, at the Public Information Reference Unit, U.S. EPA, 401 M Street, SW., Washington, DC, and at the Library (MD-35), U.S. EPA, Research Triangle Park, North Carolina.

(b) The following materials are available for purchase from at least one of the following addresses: American Society for Testing and Materials (ASTM), 1916 Race Street, Philadelphia, Pennsylvania 19103; or the University Microfilms International, 300 North Zeeb Road, Ann Arbor, Michigan 48106.

(1) ASTM D 3176-89, Standard Practice for Ultimate Analysis of Coal and Coke, IBR approved May 23, 1995 for §76.15.

(2) ASTM D 3172-89, Standard Practice for Proximate Analysis of Coal and Coke, IBR approved May 23, 1995 for §76.15.

(c) The following material is available for purchase from the American Society of Mechanical Engineers (ASME), 22 Law Drive, Box 2350, Fairfield, NJ 07007-2350.

(1) ASME Performance Test Code 4.2 (1991), Test Code for Coal Pulverizers, IBR approved May 23, 1995 for §76.15.

(2) [Reserved]

(d) The following material is available for purchase from the American National Standards Institute, 11 West 42nd Street, New York, NY 10036 or from the International Organization for Standardization (ISO), Case Postale 56, CH-1211 Geneve 20, Switzerland.

(1) ISO 9931 (December, 1991) "Coal—Sampling of Pulverized Coal Conveyed by Gases in Direct Fired Coal Systems," IBR approved May 23, 1995 for §76.15.

(2) [Reserved]

40 CFR 76.5 NO_X emission limitations for Group 1 boilers.

Copyright 1993-1997, The Bureau of National Affairs, Inc.

(a) Beginning January 1, 1996, or for a unit subject to section 404(d) of the Act, the date on which the unit is required to meet Acid Rain emission reduction requirements for SO_2, the owner or operator of a Phase I coal-fired utility unit with a tangentially fired boiler or a dry bottom wall-fired boiler (other than units applying cell burner technology) shall not discharge, or allow to be discharged, emissions of NO_X to the atmosphere in excess of the following limits, except as provided in paragraphs (c) or (e) of this section or in §§76.10, 76.11 , or 76.12:

(1) 0.45 lb/mmBtu of heat input on an annual average basis for tangentially fired boilers.

(2) 0.50 lb/mmBtu of heat input on an annual average basis for dry bottom wall- fired boilers (other than units applying cell burner technology).

(b) The owner or operator shall determine the annual average NO_X emission rate, in lb/mmBtu, using the methods and procedures specified in part 75 of this chapter.

(c) Unless the unit meets the early election requirement of §76.8, the owner or operator of a coal-fired substitution unit with a tangentially fired boiler or a dry bottom wall-fired boiler (other than units applying cell burner technology) that satisfies the requirements of §76.1(c)(2) , shall comply with the NO_X emission limitations that apply to Group 1, Phase II boilers.

(d) The owner or operator of a Phase I unit with a cell burner boiler that converts to a conventional wall-fired boiler on or before January 1, 1995 or, for a unit subject to section 404(d) of the Act, the date the unit is required to meet Acid Rain emissions reduction requirements for SO_2 shall comply, by such respective date or January 1, 1996, whichever is later, with the NO_X emissions limitation applicable to dry bottom wall-fired boilers under paragraph (a) of this section, except as provided in paragraphs (c) or (e) of this section or in §§76.10, 76.11, or 76.12.

(e) The owner or operator of a Phase I unit with a Group 1 boiler that converts to a fluidized bed or other type of utility boiler not included in Group 1 boilers on or before January 1, 1995 or, for a unit subject to section 404(d) of the Act, the date the unit is required to meet Acid Rain emissions reduction requirements for SO_2 is exempt from the NO_X emissions limitations specified in paragraph (a) of this section, but shall comply with the NO_X emission limitations for Group 2 boilers under §76.6.

(f) Except as provided in §76.8 and in paragraph (c) of this section, each unit subject to the requirements of this section is not subject to the requirements of §76.7.

(g) [Removed]

[§76.5(g) removed at 61 FR 67162, Dec. 19, 1996]

40 CFR 76.6 NO_X emission limitations for Group 2 boilers.

Copyright 1993-1997, The Bureau of National Affairs, Inc.

[§76.6 added at 61 FR 67162, Dec. 19, 1996]

(a) Beginning January 1, 2000 or, for a unit subject to section 409(b) of the Act, the date on which the unit is required to meet Acid Rain emission reduction requirements for SO_2, the owner or operator of a Group 2, Phase II coal-fired boiler with a cell burner boiler, cyclone boiler, a wet bottom boiler, or a vertically fired boiler shall not discharge, or allow to be discharged, emissions of NO_X to the atmosphere in excess of the following limits, except as provided in §§76.10 or 76.11:

(1) 0.68 lb/mmBtu of heat input on an annual average basis for cell burner boilers. The NO_X emission control technology on which the emission limitation is based is plug-in combustion controls or non- plug-in combustion controls. Except as provided in §76.5(d), the owner or operator of a unit with a cell burner boiler that installs non-plug-in combustion controls after November 15, 1990 shall comply with the emission limitation applicable to cell burner boilers. The owner or operator of a unit with a cell burner that installs non-plug-in combustion controls on or before November 15, 1990 shall comply with the applicable emission limitation for dry bottom wall-fired boilers.

(2) 0.86 lb/mmBtu of heat input on an annual average basis for cyclone boilers with a Maximum Continuous Steam Flow at 100% of Load of greater than 1060, in thousands of lb/hr. The NO_X emission control technology on which the emission limitation is based is natural gas reburning or selective catalytic reduction.

[§76.6(a)(2) corrected at 62 FR 3464, Jan. 23, 1997]

(3) 0.84 lb/mmBtu of heat input on an annual average basis for wet bottom boilers, with a Maximum Continuous Steam Flow at 100% of Load of greater than 450, in thousands of lb/hr. The NO_X emission control technology on which the emission limitation is based is natural gas reburning or selective catalytic reduction.

[§76.6(a)(3) corrected at 62 FR 3464, Jan. 23, 1997]

(4) 0.80 lb/mmBtu of heat input on an annual average basis for vertically fired boilers. The NO_X emission control technology on which the emission limitation is based is combustion controls.

(b) The owner or operator shall determine the annual average NO_X emission rate, in lb/mmBtu, using the methods and procedures specified in part 75 of this chapter.

[§76.6(b) corrected at 62 FR 3464, Jan. 23, 1997]

40 CFR 76.7 Revised NO_X emission limitations for Group 1, Phase II boilers.

[§76.7 added at 61 FR 67163, Dec. 19, 1996]

Copyright 1993-1997, The Bureau of National Affairs, Inc.

(a) Beginning January 1, 2000, the owner or operator of a Group 1, Phase II coal-fired utility unit with a tangentially fired boiler or a dry bottom wall-fired boiler shall not discharge, or allow to be discharged, emissions of NO_X to the atmosphere in excess of the following limits, except as provided in §§76.8, 76.10, or 76.11:

(1) 0.40 lb/mmBtu of heat input on an annual average basis for tangentially fired boilers.

(2) 0.46 lb/ mmBtu of heat input on an annual average basis for dry bottom wall- fired boilers (other than units applying cell burner technology).

(b) The owner or operator shall determine the annual average NO_X emission rate, in lb/mmBtu, using the methods and procedures specified in part 75 of this chapter.

40 CFR 76.8 Early election for Group 1, Phase II boilers.

(a) *General provisions.*

(1) The owner or operator of a Phase II coal-fired utility unit with a Group 1 boiler may elect to have the unit become subject to the applicable emissions limitation for NO_X under §76.5, starting no later than January 1, 1997.

(2) The owner or operator of a Phase II coal-fired utility unit with a Group 1 boiler that elects to become subject to the applicable emission limitation under §76.5 shall not be subject to §76.7 until January 1, 2008, provided the designated representative demonstrates that the unit is in compliance with the limitation under §76.5, using the methods and procedures specified in part 75 of this chapter , for the period beginning January 1 of the year in which the early election takes effect (but not later than January 1, 1997) and ending December 31, 2007.

[§76.8(a)(2) amended at 61 FR 67163, Dec. 19, 1996]

(3) The owner or operator of any Phase II unit with a cell burner boiler that converts to conventional burner technology may elect to become subject to the applicable emissions limitation under §76.5 for dry bottom wall-fired boilers, provided the owner or operator complies with the provisions in paragraph (a)(2) of this section.

(4) The owner or operator of a Phase II unit approved for early election shall not submit an application for an alternative emissions limitation demonstration period under §76.10 until the earlier of:

(i) January 1, 2008; or

(ii) Early election is terminated pursuant to paragraph (e)(3) of this section.

(5) The owner or operator of a Phase II unit approved for early election may not incorporate the unit into an averaging plan prior to January 1, 2000. On or after January 1, 2000, for purposes

Copyright 1993-1997, The Bureau of National Affairs, Inc.

of the averaging plan, the early election unit will be treated as subject to the applicable emissions limitation for NO_X for Phase II units with Group 1 boilers under §76.7.

[§76.8(a)(5) amended at 61 FR 67163, Dec. 19, 1996]

(b) *Submission requirements*. In order to obtain early election status, the designated representative of a Phase II unit with a Group 1 boiler shall submit an early election plan to the Administrator by January 1 of the year the early election is to take effect, but not later than January 1, 1997. Notwithstanding §72.40 of this chapter, and unless the unit is a substitution unit under §72.41 of this chapter or a compensating unit under §72.43 of this chapter, a complete compliance plan covering the unit shall not include the provisions for SO_2 emissions under §72.40(a)(1) of this chapter.

(c) *Contents of an early election plan*. A complete early election plan shall include the following elements in a format prescribed by the Administrator:

(1) A request for early election;

(2) The first year for which early election is to take effect, but not later than 1997; and

(3) The special provisions under paragraph (e) of this section.

(d) (1) *Permitting authority's action*. To the extent the Administrator determines that an early election plan complies with the requirements of this section, the Administrator will approve the plan and:

(i) If a Phase I Acid Rain permit governing the source at which the unit is located has been issued, will revise the permit in accordance with the permit modification procedures in §72.81 of this chapter to include the early election plan; or

(ii) If a Phase I Acid Rain permit governing the source at which the unit is located has not been issued, will issue a Phase I Acid Rain permit effective from January 1, 1995 through December 31, 1999, that will include the early election plan and a complete compliance plan under §72.40(a) of this chapter and paragraph (b) of this section . If the early election plan is not effective until after January 1, 1995, the permit will not contain any NO_X emissions limitations until the effective date of the plan.

(2) Beginning January 1, 2000, the permitting authority will approve any early election plan previously approved by the Administrator during Phase I, unless the plan is terminated pursuant to paragraph (e)(3) of this section.

(e) *Special provisions*—

(1) *Emissions limitations*. —

(i) *Sulfur dioxide*. Notwithstanding §72.9 of this chapter, a unit that is governed by an

Copyright 1993-1997, The Bureau of National Affairs, Inc.

approved early election plan and that is not a substitution unit under §72.41 of this chapter or a compensating unit under §72.43 of this chapter shall not be subject to the following standard requirements under §72.9 of this chapter for Phase I:

(A) The permit requirements under §§72.9(a)(1)(i) and (ii) of this chapter;

(B) The sulfur dioxide requirements under §72.9(c) of this chapter; and

(C) The excess emissions requirements under §72.9(e)(1) of this chapter.

(ii) *Nitrogen oxides*. A unit that is governed by an approved early election plan shall be subject to an emissions limitation for NO_X as provided under paragraph (a)(2) of this section except as provided under paragraph (e)(3)(iii) of this section.

(2) *Liability*. The owners and operators of any unit governed by an approved early election plan shall be liable for any violation of the plan or this section at that unit. The owners and operators shall be liable, beginning January 1, 2000, for fulfilling the obligations specified in part 77 of this chapter.

(3) *Termination*. An approved early election plan shall be in effect only until the earlier of January 1, 2008 or January 1 of the calendar year for which a termination of the plan takes effect.

(i) If the designated representative of the unit under an approved early election plan fails to demonstrate compliance with the applicable emissions limitation under §76.5 for any year during the period beginning January 1 of the first year the early election takes effect and ending December 31, 2007, the permitting authority will terminate the plan. The termination will take effect beginning January 1 of the year after the year for which there is a failure to demonstrate compliance, and the designated representative may not submit a new early election plan.

(ii) The designated representative of the unit under an approved early election plan may terminate the plan any year prior to 2008 but may not submit a new early election plan. In order to terminate the plan, the designated representative must submit a notice under §72.40(d) of this chapter by January 1 of the year for which the termination is to take effect.

(iii) (A) If an early election plan is terminated any year prior to 2000, the unit shall meet, beginning January 1, 2000, the applicable emissions limitation for NO_X for Phase II units with Group 1 boilers under §76.7.

[§76.8(e)(3)(iii)(A) amended at 61 FR 67163, Dec. 19, 1996]

(B) If an early election plan is terminated in or after 2000, the unit shall meet, beginning on the effective date of the termination, the applicable emissions limitation for NO_X for Phase II units with Group 1 boilers under §76.7.

[§76.8(e)(3)(iii)(B) amended at 61 FR 67163, Dec. 19, 1996]

Copyright 1993-1997, The Bureau of National Affairs, Inc.

40 CFR 76.9 Permit application and compliance plans.

(a) *Duty to apply.*

(1) The designated representative of any source with an affected unit subject to this part shall submit, by the applicable deadline under paragraph (b) of this section , a complete Acid Rain permit application (or, if the unit is covered by an Acid Rain permit, a complete permit revision) that includes a complete compliance plan for NO_X emissions covering the unit.

(2) The original and three copies of the permit application and compliance plan for NO_X emissions for Phase I shall be submitted to the EPA regional office for the region where the applicable source is located. The original and three copies of the permit application and compliance plan for NO_X emissions for Phase II shall be submitted to the permitting authority.

(b) *Deadlines.*

(1) For a Phase I unit with a Group 1 boiler, the designated representative shall submit a complete permit application and compliance plan for NO_X covering the unit during Phase I to the applicable permitting authority not later than May 6, 1994.

(2) For a Phase I or Phase II unit with a Group 2 boiler or a Phase II unit with a Group 1 boiler, the designated representative shall submit a complete permit application and compliance plan for NO_X emissions covering the unit in Phase II to the Administrator not later than January 1, 1998, except that early election units shall also submit an application not later than January 1, 1997.

(c) *Information requirements for NO_X* compliance plans.

(1) In accordance with §72.40(a)(2) of this chapter, a complete compliance plan for NO_X shall, for each affected unit included in the permit application and subject to this part, either certify that the unit will comply with the applicable emissions limitation under §76.5, 76.6, or 76.7 or specify one or more other Acid Rain compliance options for NO_X in accordance with the requirements of this part. A complete compliance plan for NO_X for a source shall include the following elements in a format prescribed by the Administrator:

(i) Identification of the source;

(ii) Identification of each affected unit that is at the source and is subject to this part;

(iii) Identification of the boiler type of each unit;

(iv) Identification of the compliance option proposed for each unit (i.e., meeting the applicable emissions limitation under §§76.5, 76.6, 76.7, 76.8 (early election), 76.10 (alternative emission limitation), 76.11 (NO_X emissions averaging), or 76.12 (Phase I NO_X compliance extension)) and any additional information required for the appropriate option in accordance with this part;

Copyright 1993-1997, The Bureau of National Affairs, Inc.

(v) Reference to the standard requirements in §72.9 of this chapter (consistent with §76.8(e)(1)(i)); and

(vi) The requirements of §§72.21(a) and (b) of this chapter.

(d) *Duty to reapply*. The designated representative of any source with an affected unit subject to this part shall submit a complete Acid Rain permit application, including a complete compliance plan for NO_X emissions covering the unit, in accordance with the deadlines in §72.30(c) of this chapter.

40 CFR 76.10 Alternative emission limitations.

(a) General provisions.

(1) The designated representative of an affected unit that is not an early election unit pursuant to §76.8 and cannot meet the applicable emission limitation in §§76.5, 76.6, or §76.7 using, for Group 1 boilers, either low NO_X burner technology or an alternative technology in accordance with paragraph (e)(11) of this section , or, for tangentially fired boilers, separated overfire air, or, for Group 2 boilers, the technology on which the applicable emission limitation is based may petition the permitting authority for an alternative emission limitation less stringent than the applicable emission limitation.

(2) In order for the unit to qualify for an alternative emission limitation, the designated representative shall demonstrate that the affected unit cannot meet the applicable emission limitation in §§76.5, 76.6, or 76.7 based on a showing, to the satisfaction of the Administrator, that:

(i) (A) For a tangentially fired boiler, the owner or operator has either properly installed low NO_X burner technology or properly installed separated overfire air; or

(B) For a dry bottom wall-fired boiler (other than a unit applying cell burner technology), the owner or operator has properly installed low NO_X burner technology; or

(C) For a Group 1 boiler, the owner or operator has properly installed an alternative technology (including but not limited to reburning, selective noncatalytic reduction, or selective catalytic reduction) that achieves NO_X emission reductions demonstrated in accordance with paragraph (e)(11) of this section; or

(D) For a Group 2 boiler, the owner or operator has properly installed the appropriate NO_X emission control technology on which the applicable emission limitation in §76.6 is based; and

(ii) The installed NO_X emission control system has been designed to meet the applicable emission limitation in §§76.5, 76.6, or 76.7; and

Copyright 1993-1997, The Bureau of National Affairs, Inc.

(iii) For a demonstration period of at least 15 months or other period of time, as provided in paragraph (f)(1) of this section:

(A) The NO_X emission control system has been properly installed and properly operated according to specifications and procedures designed to minimize the emissions of NO_X to the atmosphere;

(B) Unit operating data as specified in this section show that the unit and NO_X emission control system were operated in accordance with the bid and design specifications on which the design of the NO_X emission control system was based; and

(C) Unit operating data as specified in this section, continuous emission monitoring data obtained pursuant to part 75 of this chapter, and the test data specific to the NO_X emission control system show that the unit could not meet the applicable emission limitation in §§76.5, 76.6, or 76.7.

(b) *Petitioning process.* The petitioning process for an alternative emission limitation shall consist of the following steps:

(1) Operation during a period of at least 3 months, following the installation of the NO_X emission control system, that shows that the specific unit and the NO_X emission control system was unable to meet the applicable emissions limitation under §§76.5, 76.6 , or 76.7 and was operated in accordance with the operating conditions upon which the design of the NO_X emission control system was based and with vendor specifications and procedures;

(2) Submission of a petition for an alternative emission limitation demonstration period as specified in paragraph (d) of this section;

(3) Operation during a demonstration period of at least 15 months, or other period of time as provided in paragraph (f)(1) of this section, that demonstrates the inability of the specific unit to meet the applicable emissions limitation under §§76.5, 76.6, or 76.7 and the minimum NO_X emissions rate that the specific unit can achieve during long-term load dispatch operation; and

(4) Submission of a petition for a final alternative emission limitation as specified in paragraph (e) of this section.

(c) *Deadlines.*—

(1) *Petition for an alternative emission limitation demonstration period.* The designated representative of the unit shall submit a petition for an alternative emission limitation demonstration period to the permitting authority after the unit has been operated for at least 3 months after installation of the NO_X emission control system required under paragraph (a)(2) of this section and by the following deadline:

Copyright 1993-1997, The Bureau of National Affairs, Inc.

(i) For units that seek to have an alternative emission limitation demonstration period apply during all or part of calendar year 1996, or any previous calendar year by the later of:

(A) 120 days after startup of the NO_X emission control system, or

(B) May 1, 1996.

(ii) For units that seek an alternative emission limitation demonstration period beginning in a calendar year after 1996, not later than:

(A) 120 days after January 1 of that calendar year, or

(B) 120 days after startup of the NO_X emission control system if the unit is not operating at the beginning of that calendar year.

(2) *Petition for a final alternative emission limitation.* Not later than 90 days after the end of an approved alternative emission limitation demonstration period for the unit, the designated representative of the unit may submit a petition for an alternative emission limitation to the permitting authority.

(3) *Renewal of an alternative emission limitation.* In order to request continuation of an alternative emission limitation, the designated representative must submit a petition to renew the alternative emission limitation on the date that the application for renewal of the source's Acid Rain permit containing the alternative emission limitation is due.

(d) *Contents of petition for an alternative emission limitation demonstration period.* The designated representative of an affected unit that has met the minimum criteria under paragraph (a) of this section and that has been operated for a period of at least 3 months following the installation of the required NO_X emission control system may submit to the permitting authority a petition for an alternative emission limitation demonstration period. In the petition, the designated representative shall provide the following information in a format prescribed by the Administrator:

(1) Identification of the unit;

(2) The type of NO_X control technology installed (e.g., low NO_X burner technology, selective noncatalytic reduction, selective catalytic reduction, reburning);

(3) If an alternative technology is installed, the time period (not less than 6 consecutive months) prior to installation of the technology to be used for the demonstration required in paragraph (e)(11) of this section.

(4) Documentation as set forth in §76.14(a)(1) showing that the installed NO_X emission control system has been designed to meet the applicable emission limitation in §§76.5, 76.6, or 76.7 and that the system has been properly installed according to procedures and specifications designed to

Copyright 1993-1997, The Bureau of National Affairs, Inc.

minimize the emissions of NO_X to the atmosphere;

(5) The date the unit commenced operation following the installation of the NO_X emission control system or the date the specific unit became subject to the emission limitations of §§76.5, 76.6, or 76.7, whichever is later;

(6) The dates of the operating period (which must be at least 3 months long);

(7) Certification by the designated representative that the owner(s) or operator operated the unit and the NO_X emission control system during the operating period in accordance with: Specifications and procedures designed to achieve the maximum NO_X reduction possible with the installed NO_X emission control system or the applicable emission limitation in §§76.5, 76.6, or 76.7; the operating conditions upon which the design of the NO_X emission control system was based; and vendor specifications and procedures;

(8) A brief statement describing the reason or reasons why the unit cannot achieve the applicable emission limitation in §§76.5, 76.6 , or 76.7;

(9) A demonstration period plan, as set forth in §76.14(a)(2);

(10) Unit operating data and quality- assured continuous emission monitoring data (including the specific data items listed in §76.14(a)(3) collected in accordance with part 75 of this chapter during the operating period) and demonstrating the inability of the specific unit to meet the applicable emission limitation in §§76.5, 76.6, or 76.7 on an annual average basis while operating as certified under paragraph (d)(7) of this section;

(11) An interim alternative emission limitation, in lb/mmBtu, that the unit can achieve during a demonstration period of at least 15 months. The interim alternative emission limitation shall be derived from the data specified in paragraph (d)(10) of this section using methods and procedures satisfactory to the Administrator;

(12) The proposed dates of the demonstration period (which must be at least 15 months long);

(13) A report which outlines the testing and procedures to be taken during the demonstration period in order to determine the maximum NO_X emission reduction obtainable with the installed system. The report shall include the reasons for the NO_X emission control system's failure to meet the applicable emission limitation, and the tests and procedures that will be followed to optimize the NO_X emission control system's performance. Such tests and procedures may include those identified in §76.15 as appropriate.

(14) The special provisions at paragraph (g)(1) of this section.

(e) *Contents of petition for a final alternative emission limitation.* After the approved demonstration period, the designated representative of the unit may petition the permitting

Copyright 1993-1997, The Bureau of National Affairs, Inc.

authority for an alternative emission limitation. The petition shall include the following elements in a format prescribed by the Administrator:

(1) Identification of the unit;

(2) Certification that the owner(s) or operator operated the affected unit and the NO_X emission control system during the demonstration period in accordance with: specifications and procedures designed to achieve the maximum NO_X reduction possible with the installed NO_X emission control system or the applicable emissions limitation in §§76.5, 76.6,or 76.7; the operating conditions (including load dispatch conditions) upon which the design of the NO_X emission control system was based; and vendor specifications and procedures.

(3) Certification that the owner(s) or operator have installed in the affected unit all NO_X emission control systems, made any operational modifications, and completed any planned upgrades and/or maintenance to equipment specified in the approved demonstration period plan for optimizing NO_X emission reduction performance, consistent with the demonstration period plan and the proper operation of the installed NO_X emission control system. Such certification shall explain any differences between the installed NO_X emission control system and the equipment configuration described in the approved demonstration period plan.

(4) A clear description of each step or modification taken during the demonstration period to improve or optimize the performance of the installed NO_X emission control system.

(5) Engineering design calculations and drawings that show the technical specifications for installation of any additional operational or emission control modifications installed during the demonstration period.

(6) Unit operating and quality-assured continuous emission monitoring data (including the specific data listed in §76.14(b)) collected in accordance with part 75 of this chapter during the demonstration period and demonstrating the inability of the specific unit to meet the applicable emission limitation in §§76.5, 76.6, or 76.7 on an annual average basis while operating in accordance with the certification under paragraph (e)(2) of this section.

(7) A report (based on the parametric test requirements set forth in the approved demonstration period plan as identified in paragraph (d)(13) of this section), that demonstrates the unit was operated in accordance with the operating conditions upon which the design of the NO_X emission control system was based and describes the reason or reasons for the failure of the installed NO_X emission control system to meet the applicable emission limitation in §§76.5, 76.6, or 76.7 on an annual average basis.

(8) The minimum NO_X emission rate, in lb/mmBtu, that the affected unit can achieve on an annual average basis with the installed NO_X emission control system. This value, which shall be the requested alternative emission limitation, shall be derived from the data specified in this

Copyright 1993-1997, The Bureau of National Affairs, Inc.

section using methods and procedures satisfactory to the Administrator and shall be the lowest annual emission rate the unit can achieve with the installed NO_X emission control system;

(9) All supporting data and calculations documenting the determination of the requested alternative emission limitation and its conformance with the methods and procedures satisfactory to the Administrator;

(10) The special provisions in paragraph (g)(2) of this section.

(11) In addition to the other requirements of this section, the owner or operator of an affected unit with a Group 1 boiler that has installed an alternative technology in addition to or in lieu of low NO_X burner technology and cannot meet the applicable emission limitation in §76.5 shall demonstrate, to the satisfaction of the Administrator, that the actual percentage reduction in NO_X emissions (lbs/mmBtu), on an annual average basis is greater than 65 percent of the average annual NO_X emissions prior to the installation of the NO_X emission control system. The percentage reduction in NO_X emissions shall be determined using continuous emissions monitoring data for NO_X taken during the time period (under paragraph (d)(3) of this section) prior to the installation of the NO_X emission control system and during long-term load dispatch operation of the specific boiler.

(f) *Permitting authority's action.—*

(1) *Alternative emission limitation demonstration period.*

(i) The permitting authority may approve an alternative emission limitation demonstration period and demonstration period plan, provided that the requirements of this section are met to the satisfaction of the permitting authority. The permitting authority shall disapprove a demonstration period if the requirements of paragraph (a) of this section were not met during the operating period.

(ii) If the demonstration period is approved, the permitting authority will include, as part of the demonstration period, the 4 month period prior to submission of the application in the demonstration period.

(iii) The alternative emission limitation demonstration period will authorize the unit to emit at a rate not greater than the interim alternative emission limitation during the demonstration period on or after January 1, 1996 for Phase I units and the applicable date established in §§76.6 or 76.7 for Phase II units, and until the date that the Administrator approves or denies a final alternative emission limitation.

[§76.10(f)(1)(iii) amended at 61 FR 67163, Dec. 19, 1996]

(iv) After an alternative emission limitation demonstration period is approved, if the designated representative requests an extension of the demonstration period in accordance with paragraph

Copyright 1993-1997, The Bureau of National Affairs, Inc.

(g)(1)(i)(B) of this section, the permitting authority may extend the demonstration period by administrative amendment (under §72.83 of this chapter) to the Acid Rain permit.

(v) The permitting authority shall deny the demonstration period if the designated representative cannot demonstrate that the unit met the requirements of paragraph (a)(2) of this section. In such cases, the permitting authority shall require that the owner or operator operate the unit in compliance with the applicable emission limitation in §§76.5, 76.6, or 76.7 for the period preceding the submission of the application for an alternative emission limitation demonstration period, including the operating period, if such periods are after the date on which the unit is subject to the standard limit under §§76.5, 76.6, or §76.7.

(2) *Alternative emission limitation.*

(i) If the permitting authority determines that the requirements in this section are met, the permitting authority will approve an alternative emission limitation and issue or revise an Acid Rain permit to apply the approved limitation, in accordance with subparts F and G of part 72 of this chapter. The permit will authorize the unit to emit at a rate not greater than the approved alternative emission limitation, starting the date the permitting authority revises an Acid Rain permit to approve an alternative emission limitation.

(ii) If a permitting authority disapproves an alternative emission limitation under paragraph (a)(2) of this section, the owner or operator shall operate the affected unit in compliance with the applicable emission limitation in §§76.5, 76.6, or 76.7 (unless the unit is participating in an approved averaging plan under §76.11) beginning on the date the permitting authority revises an Acid Rain permit to disapprove an alternative emission limitation.

(3) *Alternative emission limitation renewal.*

(i) If, upon review of a petition to renew an approved alternative emission limitation, the permitting authority determines that no changes have been made to the control technology, its operation, the operating conditions on which the alternative emission limitation was based, or the actual NO_X emission rate, the alternative emission limitation will be renewed.

(ii) If the permitting authority determines that changes have been made to the control technology, its operation, the fuel quality, or the operating conditions on which the alternative emission limitation was based, the designated representative shall submit, in order to renew the alternative emission limitation or to obtain a new alternative emission limitation, a petition for an alternative emission limitation demonstration period that meets the requirements of paragraph (d) of this section using a new demonstration period.

(g) *Special provisions.—*

(1) *Alternative emission limitation demonstration period.*

(i) *Emission limitations.*

Copyright 1993-1997, The Bureau of National Affairs, Inc.

(A) Each unit with an approved alternative emission limitation demonstration period shall comply with the interim emission limitation specified in the unit's permit beginning on the effective date of the demonstration period specified in the permit and, if a timely petition for a final alternative emission limitation is submitted, extending until the date on which the permitting authority issues or revises an Acid Rain permit to approve or disapprove an alternative emission limitation. If a timely petition is not submitted, then the unit shall comply with the standard emission limit under §§76.5, 76.6, or 76.7 beginning on the date the petition was required to be submitted under paragraph (c)(2) of this section.

(B) When the owner or operator identifies, during the demonstration period, boiler operating or NO_X emission control system modifications or upgrades that would produce further NO_X emission reductions, enabling the affected unit to comply with or bring its emission rate closer to the applicable emissions limitation under §§76.5, 76.6, or 76.7, the designated representative may submit a request and the permitting authority may grant, by administrative amendment under §72.83 of this chapter, an extension of the demonstration period for such period of time (not to exceed 12 months) as may be necessary to implement such modifications or upgrades.

(C) If the approved interim alternative emission limitation applies to a unit for part, but not all, of a calendar year, the unit shall determine compliance for the calendar year in accordance with the procedures in §76.13(a).

(ii) *Operating requirements.*

(A) A unit with an approved alternative emission limitation demonstration period shall be operated under load dispatch conditions consistent with the operating conditions upon which the design of the NO_X emission control system and performance guarantee were based, and in accordance with the demonstration period plan.

(B) A unit with an approved alternative emission limitation demonstration period shall install all NO_X emission control systems, make any operational modifications, and complete any upgrades and maintenance to equipment specified in the approved demonstration period plan for optimizing NO_X emission reduction performance.

(C) When the owner or operator identifies boiler or NO_X emission control system operating modifications that would produce higher NO_X emission reductions, enabling the affected unit to comply with, or bring its emission rate closer to, the applicable emission limitation under §§76.5, 76.6, or 76.7, the designated representative shall submit an administrative amendment under §72.83 of this chapter to revise the unit's Acid Rain permit and demonstration period plan to include such modifications.

(iii) *Testing requirements.* A unit with an approved alternative emission limitation demonstration period shall monitor in accordance with part 75 of this chapter and shall conduct all tests required under the approved demonstration period plan.

Copyright 1993-1997, The Bureau of National Affairs, Inc.

(2) *Final alternative emission limitation.*—

(i) *Emission limitations.*

(A) Each unit with an approved alternative emission limitation shall comply with the alternative emission limitation specified in the unit's permit beginning on the date specified in the permit as issued or revised by the permitting authority to apply the final alternative emission limitation.

(B) If the approved interim or final alternative emission limitation applies to a unit for part, but not all, of a calendar year, the unit shall determine compliance for the calendar year in accordance with the procedures in §76.13(a).

40 CFR 76.11 Emissions averaging.

(a) *General provisions.* In lieu of complying with the applicable emission limitation in §§76.5, 76.6, or 76.7, any affected units subject to such emission limitation, under control of the same owner or operator, and having the same designated representative may average their NO_X emissions under an averaging plan approved under this section.

(1) Each affected unit included in an averaging plan for Phase I shall be a Phase I unit with a Group 1 boiler subject to an emission limitation in §76.5 during all years for which the unit is included in the plan.

(i) If a unit with an approved NO_X compliance extension is included in an averaging plan for 1996, the unit shall be treated, for the purposes of applying Equation 1 in paragraph (a)(6) of this section and Equation 2 in paragraph (d)(1)(ii)(A) of this section, as subject to the applicable emissions limitation under §76.5 for the entire year 1996.

(ii) A Phase II unit approved for early election under §76.8 shall not be included in an averaging plan for Phase I.

(2) Each affected unit included in an averaging plan for Phase II shall be a boiler subject to an emission limitation in §§76.5, 76.6, or 76.7 for all years for which the unit is included in the plan.

(3) Each unit included in an averaging plan shall have an alternative contemporaneous annual emission limitation (lb/mmBtu) and can only be included in one averaging plan.

(4) Each unit included in an averaging plan shall have a minimum allowable annual heat input value (mmBtu), if it has an alternative contemporaneous annual emission limitation more stringent than that unit's applicable emission limitation under §76.5, 76.6 mum allowable annual heat input value, if it has an alternative contemporaneous annual emission limitation less stringent than that unit's applicable emission limitation under §§76.5, 76.6, or 76.7.

(5) The Btu-weighted annual average emission rate for the units in an averaging plan shall be less than or equal to the Btu- weighted annual average emission rate for the same units had they

Copyright 1993-1997, The Bureau of National Affairs, Inc.

$$\frac{\sum_{i=1}^{n}(R_{Li} \times HI_i)}{\sum_{i=1}^{n} HI_i} \leq \frac{\sum_{i=1}^{n}(R_{li} \times HI_i)}{\sum_{i=1}^{n} HI_i} \qquad \text{(Equation 1)}$$

each been operated, during the same period of time, in compliance with the applicable emission limitations in §§76.5, 76.6,or 76.7.

(6) In order to demonstrate that the proposed plan is consistent with paragraph (a)(5) of this section , the alternative contemporaneous annual emission limitations and annual heat input values assigned to the units in the proposed averaging plan shall meet the following requirement:

Where:

R_{li}=Alternative contemporaneous annual emission limitation for unit i, lb/mmBtu, as specified in the averaging plan;

R_{ii}=Applicable emission limitation for unit i, lb/mmBtu, as specified in §§76.5, 76.6, or 76.7 except that for early election units, which may be included in an averaging plan only on or after January 1, 2000, R_{li} shall equal the most stringent applicable emission limitation under §§76.5 or 76.7;

HI_i=Annual heat input for unit i, mmBtu, as specified in the averaging plan;

n=Number of units in the averaging plan.

(7) For units with an alternative emission limitation, R_{li} shall equal the applicable emissions limitation under §76.5, 76.6, or 76.7, not the alternative emissions limitation.

(8) No unit may be included in more than one averaging plan.

(b) (1) *Submission requirements.* The designated representative of a unit meeting the requirements of paragraphs (a)(1), (a)(2), and (a)(8) of this section may submit an averaging plan (or a revision to an approved averaging plan) to the permitting authority(ies) at any time up to and including January 1 (or July 1, if the plan is restricted to units located within a single permitting authority's jurisdiction) of the calendar year for which the averaging plan is to become effective.

(2) The designated representative shall submit a copy of the same averaging plan (or the same revision to an approved averaging plan) to each permitting authority with jurisdiction over a unit in the plan.

(3) When an averaging plan (or a revision to an approved averaging plan) is not approved, the owner or operator of each unit in the plan shall operate the unit in compliance with the emission limitation that would apply in the absence of the averaging plan (or revision to a plan).

(c) *Contents of NO_X averaging plan.* A complete NO_X averaging plan shall include the following elements in a format prescribed by the Administrator:

(1) Identification of each unit in the plan;

(2) Each unit's applicable emission limitation in §76.5, 76.6 , or 76.7;

Copyright 1993-1997, The Bureau of National Affairs, Inc.

(3) The alternative contemporaneous annual emission limitation for each unit (in lb/mmBtu). If any of the units identified in the NO_X averaging plan utilize a common stack pursuant to §75.17(a)(2)(i) (B) of this chapter, the same alternative contemporaneous emission limitation shall be assigned to each such unit and different heat input limits may be assigned;

(4) The annual heat input limit for each unit (in mmBtu);

(5) The calculation for Equation 1 in paragraph (a)(6) of this section;

(6) The calendar years for which the plan will be in effect; and

(7) The special provisions in paragraph (d)(1) of this section.

(d) *Special provisions*—.

(1) *Emission limitations*. Each affected unit in an approved averaging plan is in compliance with the Acid Rain emission limitation for NO_X under the plan only if the following requirements are met:

(i) For each unit, the unit's actual annual average emission rate for the calendar year, in lb/mmBtu, is less than or equal to its alternative contemporaneous annual emission limitation in the averaging plan; and

(A) For each unit with an alternative contemporaneous emission limitation less stringent than the applicable emission limitation in §§76.5, 76.6, or 76.7, the actual annual heat input for the calendar year does not exceed the annual heat input limit in the averaging plan;

(B) For each unit with an alternative contemporaneous annual emission limitation more stringent than the applicable emission limitation in §§76.5, 76.6, or 76.7, the actual annual heat input for the calendar year is not less than the annual heat input limit in the averaging plan; or

(ii) If one or more of the units does not meet the requirements under paragraph (d)(1)(i) of this section, the designated representative shall demonstrate, in accordance with paragraph (d)(1)(ii)(A) of this section (Equation 2) that the actual Btu-weighted annual average emission rate for the units in the plan is less than or equal to the Btu-weighted annual average rate for the same units had they each been operated, during the same period of time, in compliance with the applicable emission limitations in §§76.5, 76.6, or 76.7.

(A) A group showing of compliance shall be made based on the following equation:

Where:

R_{ai}=Actual annual average emission rate for unit i, lb/mmBtu, as determined using the procedures in part 75 of this chapter. For units in an averaging plan utilizing a common stack

Copyright 1993-1997, The Bureau of National Affairs, Inc.

$$\frac{\sum_{i=1}^{n}(R_{ai} \times HI_{ai})}{\sum_{i=1}^{n} HI_{ai}} \leq \frac{\sum_{i=1}^{n}(R_{li} \times HI_{ai})}{\sum_{i=1}^{n} HI_{ai}} \quad \text{(Equation 2)}$$

pursuant to §75.17(a)(2)(i)(B) of this chapter, use the same NO_x emission rate value for each unit utilizing the common stack, and calculate this value in accordance with appendix F to part 75 of this chapter;

R_{li}=Applicable annual emission limittion for unit i, lb/mmBtu, as specified in §§76.5, 76.6, or 76.7, except that for early election units, which may be included in an averaging plan only on or after January 1, 2000, R_{li} shall equal the most stringent applicable emission limitation under §§76.5 or 76.7;

HI_{ai}=Actual annual heat input for unit i, mmBtu, as determined using the procedures in part 75 of this chapter.

n=Number of units in the averaging plan.

(B) For units with an alternative emission limitation, R_{li} shall equal the applicable emission limitation under §§76.5, 76.6, or 76.7, not the alternative emission limitation.

(C) If there is a successful group showing of compliance under paragraph (d)(1)(ii)(A) of this section for a calendar year, then all units in the averaging plan shall be deemed to be in compliance for that year with their alternative contemporaneous emission limitations and annual heat input limits under paragraph (d)(1)(i) of this section.

(2) *Liability*. The owners and operators of a unit governed by an approved averaging plan shall be liable for any violation of the plan or this section at that unit or any other unit in the plan, including liability for fulfilling the obligations specified in part 77 of this chapter and sections 113 and 411 of the Act.

(3) *Withdrawal or termination*. The designated representative may submit a notification to terminate an approved averaging plan in accordance with §72.40(d) of this chapter, no later than October 1 of the calendar year for which the plan is to be withdrawn or terminated.

40 CFR 76.12 Phase I NO_X compliance extension.

(a) *General provisions*.

(1) The designated representative of a Phase I unit with a Group 1 boiler may apply for and receive a 15-month extension of the deadline for meeting the applicable emissions limitation under §76.5 where it is demonstrated, to the satisfaction of the Administrator, that:

(i) The low NO_X burner technology designed to meet the applicable emission limitation is not in adequate supply to enable installation and operation at the unit, consistent with system reliability, by January 1, 1995 and the reliability problems are due substantially to NO_X emission control system installation and availability; or

(ii) The unit is participating in an approved clean coal technology demonstration project.

(2) In order to obtain a Phase I NO_X compliance extension, the designated representative shall

Copyright 1993-1997, The Bureau of National Affairs, Inc.

submit a Phase I NO_X compliance extension plan by October 1, 1994.

(b) *Contents of Phase I NO_X compliance extension plan.* A complete Phase I NO_X compliance extension plan shall include the following elements in a format prescribed by the Administrator:

(1) Identification of the unit.

(2) For units applying pursuant to paragraph (a)(1)(i) of this section:

(i) A list of the company names, addresses, and telephone numbers of vendors who are qualified to provide the services and low NO_X burner technology designed to meet the applicable emission limitation under §76.5 and have been contacted to obtain the required services and technology. The list shall include the dates of contact, and a copy of each request for bids shall be submitted, along with any other information necessary to show a good-faith effort to obtain the required services and technology necessary to meet the requirements of this part on or before January 1, 1995.

(ii) A copy of those portions of a legally binding contract with a qualified vendor that demonstrate that services and low NO_X burner technology designed to meet the applicable emission limitation under §76.5, with a completion date not later than December 31, 1995 have been contracted for.

(iii) Scheduling information, including justification and test schedules.

(iv) To demonstrate, if applicable, that the supply of the low NO_X burner technology designed to meet the applicable emission limitation under §76.5 is inadequate to enable its installation and operation at the unit, consistent with system reliability, in time for the unit to comply with the applicable emission limitation on or before January 1, 1995, either:

(A) Certification from the selected vendor(s) (by a certifying official) listed in paragraph (b)(2)(i) of this section stating that they cannot provide the necessary services and install the low NO_X burner technology on or before January 1, 1995 and explaining the reasons why the services cannot be provided and why the equipment cannot be installed in a timely manner; or

(B) The following information:

(i) Standard load forecasts, based on standard forecasting models available throughout the utility industry and applied to the period, January 1, 1993, through December 31, 1994.

(ii) Specific reasons why an outage cannot be scheduled to enable the unit to install and operate the low NO_X burner technology by January 1, 1995, including reasons why no other units can be used to replace this unit's generation during such outage.

(iii) Fuel and energy balance summaries and power and other consumption requirements (including those for air, steam, and cooling water).

Copyright 1993-1997, The Bureau of National Affairs, Inc.

(3) To demonstrate, if applicable, participation in an approved clean coal technology demonstration project, a description of the project, including all sources of federal, State, and other outside funding, amount and date for approval of federal funding, the duration of the project, and the anticipated completion date of the project.

(4) The special provisions in paragraph (d) of this section.

(c) (1) *Administrator's action.* To the extent the Administrator determines that a Phase I NO_X compliance extension plan complies with the requirements of this section, the Administrator will approve the plan and revise the Acid Rain permit governing the unit in the plan in order to incorporate the plan by administrative amendment under §72.83 of this chapter, except that the Administrator shall have 90 days from receipt of the compliance extension plan to take final action.

(2) The Administrator will approve or disapprove a proposed NO_X compliance extension plan within 3 months of receipt.

(d) *Special provisions.*

(1) Emission limitations. The unit shall comply with the applicable emission limitation under §76.5 beginning April 1, 1996. Compliance shall be determined as specified in part 75 of this chapter using measured values of NO_X emissions and heat input only for the portion of the year that the emission limit is in effect.

(2) If a unit with an approved NO_X compliance extension is included in an averaging plan under §76.11 for year 1996, the unit shall be treated, for purposes of applying Equation 1 in §76.11(a)(6) and Equation 2 in §76.11(d)(1)(ii)(A), as subject to the applicable emission limitation under §76.5 for the entire year 1996.

(e) *Extension until December 31, 1997.*

(1) The designated representative of a Phase I unit that is subject to section 404(d) of the Act, has a tangentially fired boiler, and is unable to install low NO_X burner technology by January 1, 1997 may submit a petition for and receive an extension for meeting the applicable emission limitation under §76.5 where it is demonstrated, to the satisfaction of the Administrator, that:

(i) The unit is located at a source with two or more other units, all of which are Phase I units that are subject to section 404(d) of the Act and have tangentially fired boilers;

(ii) The NO_X control system at the unit was scheduled to be installed by January 1, 1997 and, because of operational problems associated with the NO_X control system, will be redesigned; and

(iii) Installation of the redesigned low NO_X burner technology at the unit cannot be completed by January 1, 1997 without causing system reliability problems.

Copyright 1993-1997, The Bureau of National Affairs, Inc.

(2) A complete petition shall include the following elements and shall be submitted by April 28, 1995.

(i) Identification of the unit and the other units at the source;

(ii) A statement describing how the requirements of paragraphs (e)(1)(ii) and (e)(1)(iii) of this section are met;

(iii) The earliest date, not later than December 31, 1997, by which installation of the redesigned low NO_X burner technology can be completed consistent with system reliability; and

(iv) The provisions in paragraph (e)(4) of this section.

(3) To the extent the Administrator determines that a Phase I unit meets the requirements of paragraphs (e)(1) and (e)(2) of this section, the Administrator will approve the petition within 90 days from receipt of the complete petition. The Acid Rain permit governing the unit will be revised in order to incorporate the approved extension, which shall terminate no later than December 31, 1997, by administrative amendment under §72.83 of this chapter except that the Administrator will have 90 days to take final action.

(4) The unit shall comply with the applicable emission limitation under §76.5 beginning on the day immediately following the day on which the extension approved under paragraph (e)(3) of this section terminates. Compliance shall be determined as specified in part 75 of this chapter using measured values of NO_X emissions and heat input only for the portion of the year that the emission limit is in effect. If a unit with an approved extension is included in an averaging plan under §76.11 for year 1997, the unit shall be treated, for the purpose of applying Equation 1 in §76.11(a)(6) and Equation 2 in §76.11(d)(1)(ii)(A), as subject to the applicable emission limitation under §76.5 for the entire year 1997.

40 CFR 76.13 Compliance and excess emissions.

Excess emissions of nitrogen oxides under §77.6 of this chapter shall be calculated as follows:

(a) For a unit that is not in an approved averaging plan:

(1) Calculate EE_i for each portion of the calendar year that the unit is subject to a different NO_X emission limitation:

$$EE_i = \frac{(R_{ai} - R_{li}) \times HI_i}{2000} \qquad \text{(Equation 3)}$$

Where:

EE_i=Excess emissions for NO_x for the portion of the calendar year (in tons);

R_{ai}=Actual average emission rate for the unit (in lb/mmBtu), determined according to part 75 of this chapter for the portion of the calendar year for which the applicable emission limitation R_l is in effect.

Copyright 1993-1997, The Bureau of National Affairs, Inc.

R_{li}=Applicable emission limitation for the unit, (in lb/mmBtu), as specified in §§76.5, 76.6, or 76.7 or as determined under §76.10.

(2) If EE_i is a negative number for any portion of the calendar year, the EE value for that portion of the calendar year shall be equal to zero (e.g., if $EE_i = -100$, then $EE_i = 0$).

(3) Sum all EE_i values for the calendar year:

$$EE = \sum_{i=1}^{n} EE_i \quad \text{(Equation 4)}$$

HI^i=Actual heat input for the unit, (in mmBtu), determined according to part 75 of this chapter for the portion of the calendar year for which the applicable emission limitation, R_1, is in effect.

Where:

EE=Excess emissions for NO_x for the year (in tons);

n=The number of time periods during which a unit is subject to different emission limitations; and

(b) For units participating in an approved averaging plan, when all the requirements under §76.11(d)(1) are not met,

Where:

EE=Excess emissions fro NO_x for the year (in tons);

R_{ai}=Actual annual average emission rate for NO_x for unit i, (in lb/mmBtu), determined according to part 75 of this chapter;

R_{li}=Applicable emission limitation for unit i, (in lb/mmBtu), as specified in §§76.5, 76.6, or 76.7;

HI_i=Actual annual heat input for unit i, mmBtu, determined according to part 75 of this chapter;

n=Number of units in the averaging plan.

40 CFR 76.14 Monitoring, recordkeeping, and reporting.

(a) A petition for an alternative emission limitation demonstration period under §76.10(d) shall include the following information:

(1) In accordance with §76.10(d)(4) , the following information:

(i) Documentation that the owner or operator solicited bids for a NO_X emission control system designed for application to the specific boiler and designed to achieve the applicable emission limitation in §§76.5, 76.6, or 76.7 on an annual average basis. This documentation must include a copy of all bid specifications.

Copyright 1993-1997, The Bureau of National Affairs, Inc.

$$EE = \frac{\sum_{i=1}^{n}(R_{ai} \times HI_i) - \sum_{i=1}^{n}(R_{li} \times HI_i)}{2000} \quad \text{(Equation 5)}$$

(ii) A copy of the performance guarantee submitted by the vendor of the installed NO_X emission control system to the owner or operator showing that such system was designed to meet the applicable emission limitation in §§76.5, 76.6, or 76.7 on an annual average basis.

(iii) Documentation describing the operational and combustion conditions that are the basis of the performance guarantee.

(iv) Certification by the primary vendor of the NO_X emission control system that such equipment and associated auxiliary equipment was properly installed according to the modifications and procedures specified by the vendor.

(v) Certification by the designated representative that the owner(s) or operator installed technology that meets the requirements of §76.10(a)(2).

(2) In accordance with §76.10(d)(9) , the following information:

(i) The operating conditions of the NO_X emission control system including load range, O_2 range, coal volatile matter range, and, for tangentially fired boilers, distribution of combustion air within the NO_X emission control system;

(ii) Certification by the designated representative that the owner(s) or operator have achieved and are following the operating conditions, boiler modifications, and upgrades that formed the basis for the system design and performance guarantee;

(iii) Any planned equipment modifications and upgrades for the purpose of achieving the maximum NO_X reduction performance of the NO_X emission control system that were not included in the design specifications and performance guarantee, but that were achieved prior to submission of this application and are being followed;

(iv) A list of any modifications or replacements of equipment that are to be done prior to the completion of the demonstration period for the purpose of reducing emissions of NO_X; and

(v) The parametric testing that will be conducted to determine the reason or reasons for the failure of the unit to achieve the applicable emission limitation and to verify the proper operation of the installed NO_X emission control system during the demonstration period. The tests shall include tests in §76.15, which may be modified as follows:

(A) The owner or operator of the unit may add tests to those listed in §76.15, if such additions provide data relevant to the failure of the installed NO_X emission control system to meet the applicable emissions limitation in §§76.5, 76.6, or 76.7; or

(B) The owner or operator of the unit may remove tests listed in §76.15 that are shown, to the satisfaction of the permitting authority, not to be relevant to NO_X emissions from the affected unit; and

Copyright 1993-1997, The Bureau of National Affairs, Inc.

(C) In the event the performance guarantee or the NO_X emission control system specifications require additional tests not listed in §76.15, or specify operating conditions not verified by tests listed in §76.15, the owner or operator of the unit shall include such additional tests.

(3) In accordance with §76.10(d)(10) , the following information for the operating period:

(i) The average NO_X emission rate (in lb/mmBtu) of the specific unit;

(ii) The highest hourly NO_X emission rate (in lb/mmBtu) of the specific unit;

(iii) Hourly NO_X emission rate (in lb/mmBtu), calculated in accordance with part 75 of this chapter;

(iv) Total heat input (in mmBtu) for the unit for each hour of operation, calculated in accordance with the requirements of part 75 of this chapter; and

(v) Total integrated hourly gross unit load (in MWge).

(b) A petition for an alternative emission limitation shall include the following information in accordance with §76.10(e)(6).

(1) Total heat input (in mmBtu) for the unit for each hour of operation, calculated in accordance with the requirements of part 75 of this chapter;

(2) Hourly NO_X emission rate (in lb/mmBtu), calculated in accordance with the requirements of part 75 of this chapter; and

(3) Total integrated hourly gross unit load (MWge).

(c) *Reporting of the costs of low NO_X burner technology applied to Group 1, Phase I boilers.*

(1) Except as provided in paragraph (c)(2) of this section, the designated representative of a Phase I unit with a Group 1 boiler that has installed or is installing any form of low NO_X burner technology shall submit to the Administrator a report containing the capital cost, operating cost, and baseline and post-retrofit emission data specified in appendix B to this part . If any of the required equipment, cost, and schedule information are not available (e.g., the retrofit project is still underway), the designated representative shall include in the report detailed cost estimates and other projected or estimated data in lieu of the information that is not available.

(2) The report under paragraph (c)(1) of this section is not required with regard to the following types of Group 1, Phase I units:

(i) Units employing no new NO_X emission control system after November 15, 1990;

(ii) Units employing modifications to boiler operating parameters (e.g., burners out of service or

Copyright 1993-1997, The Bureau of National Affairs, Inc.

fuel switching) without low NO_X burners or other emission reduction equipment for reducing NO_X emissions;

(iii) Units with wall-fired boilers employing only overfire air and units with tangentially fired boilers employing only separated overfire air; or

(iv) Units beginning installation of a new NO_X emission control system after August 11, 1995.

(3) The report under paragraph (c)(1) of this section shall be submitted to the Administrator by:

(i) 120 days after completion of the low NO_X burner technology retrofit project; or

(ii) May 23, 1995, if the project was completed on or before January 23, 1995.

40 CFR 76.15 Test methods and procedures.

(a) The owner or operator may use the following tests as a basis for the report required by §76.10(e)(7):

(1) Conduct an ultimate analysis of coal using ASTM D 3176-89 (incorporated by reference as specified in §76.4);

(2) Conduct a proximate analysis of coal using ASTM D 3172-89 (incorporated by reference as specified in §76.4); and

(3) Measure the coal mass flow rate to each individual burner using ASME Power Test Code 4.2 (1991), "Test Code for Coal Pulverizers" or ISO 9931 (1991), "Coal—Sampling of Pulverized Coal Conveyed by Gases in Direct Fired Coal Systems" (incorporated by reference as specified in §76.4).

(b) The owner or operator may measure and record the actual NO_X emission rate in accordance with the requirements of this part while varying the following parameters where possible to determine their effects on the emissions of NO_X from the affected boiler:

(1) Excess air levels;

(2) Settings of burners or coal and air nozzles, including tilt and yaw, or swirl;

(3) For tangentially fired boilers, distribution of combustion air within the NO_X emission control system;

(4) Coal mass flow rates to each individual burner;

(5) Coal-to-primary air ratio (based on pound per hour) for each burner, the average coal-to-primary air ratio for all burners, and the deviations of individual burners' coal-to-primary air ratios from the average value; and

Copyright 1993-1997, The Bureau of National Affairs, Inc.

(6) If the boiler uses varying types of coal, the type of coal. Provide the results of proximate and ultimate analyses of each type of as-fired coal.

(c) In performing the tests specified in paragraph (a) of this section, the owner or operator shall begin the tests using the equipment settings for which the NO_X emission control system was designed to meet the NO_X emission rate guaranteed by the primary NO_X emission control system vendor. These results constitute the "baseline controlled" condition.

(d) After establishing the baseline controlled condition under paragraph (c) of this section, the owner or operator may:

(1) Change excess air levels ± 5 percent from the baseline controlled condition to determine the effects on emissions of NO_X, by providing a minimum of three readings (e.g., with a baseline reading of 20 percent excess air, excess air levels will be changed to 19 percent and 21 percent);

(2) For tangentially fired boilers, change the distribution of combustion air within the NO_X emission control system to determine the effects on NO_X emissions by providing a minimum of three readings, one with the minimum, one with the baseline, and one with the maximum amounts of staged combustion air; and

(3) Show that the combustion process within the boiler is optimized (e.g., that the burners are balanced).

40 CFR 76.16 Alternative compliance.

[§76.16 added at 61 FR 67163, Dec. 19, 1996]

(a) (1) A State or group of States may submit a petition requesting that the Administrator, or the Administrator, on his or her own motion, may:

(i) Require the owners or operators of the Group 1, Phase II coal-fired utility units with a tangentially fired boiler or a dry bottom wall fired boiler in the State or the group of States to be subject to the applicable emission limitations for NO_X in §76.5, in lieu of the applicable emission limitations for NO_X in §76.7; and

(ii) Provide that the owners or operators of the Group 2 coal-fired utility units with a cell burner boiler, cyclone boiler, wet bottom boiler, or vertically fired boiler in the State or the group of States are not subject to the applicable emission limitations for NO_X in §76.6.

(2) A petition under paragraph (a)(1) of this section must demonstrate that the requirements in paragraphs (b)(1) and (2) of this section are met.

(3) A petition under paragraph (a)(1) of this section may be submitted, but may not be approved by the Administrator, before the State Implementation Plan or Federal Implementation Plan

Copyright 1993-1997, The Bureau of National Affairs, Inc.

covering the entire State or the State Implementation Plans or Federal Implementation Plans covering the entire group of States become final and federally enforceable.

(b) The Administrator may take the actions set forth in paragraphs (a)(1)(i) and (ii) of this section if he or she finds that, under the State Implementation Plan or Federal Implementation Plan covering the entire State or the State Implementation Plans or Federal Implementation Plans covering the entire group of States:

(1) Each unit that is in the State or the group of States and that, but for the provisions of this section, would be subject to emission limitations under this part

(i) Is subject to a cap on total annual NO_X emissions or two or more seasonal caps that together limit total annual NO_X emissions;

(ii) May trade authorizationsto emit NO_X within each such cap; and

(iii) Must use NO_X emission authorizations to account for the NO_X emissions by such unit and to account for the NO_X emissions resulting from reducing utilization of such unit below its baseline utilization (adjusted for changes in demand for electricity) and shifting utilization to any other unit, or combustion device serving a generator that produces electricity for sale, that is not subject to each such cap; and

(2) (i) Total annual NO_X emissions by all units that are in the State or the group of States and that, but for the provisions of this section, would be subject to emission limitations under this part will be lower than total annual NO_X emissions by such units if each such unit is treated as subject to the applicable emission limitation in §§76.5, 76.6, or 76.7 that would apply but for the provisions of this section.

(ii) In the case of a petition under paragraph (a) of this section, total annual NO_X emissions by the units will be determined using the actual utilizations of the units for the last full calendar year prior to submission of the petition but, in any event, for no later than 1999. In the case of action by the Administrator on his or her own motion under paragraph (a) of this section, total annual NO_X emissions by the units will be determined using the actual utilizations of the units for the last full calendar year prior to issuance of the draft decision under paragraph (c) of this section, but, in any event, for no later than 1999.

(c) In acting on a petition or on his or her own motion under paragraph (a) of this section, the Administrator will issue for public comment a draft decision on the petition or a draft decision to act on his or her own motion and then a final decision. The Administrator may issue a draft decision, but not final decision, on a petition or on his or her own motion before the State Implementation Plan or Federal Implementation Plan covering the entire State or the State Implementation Plans or Federal Implementation Plans covering the entire group of States become final and federally enforceable. The draft decision will set forth procedures that will

Copyright 1993-1997, The Bureau of National Affairs, Inc.

govern issuance of the final decision and will provide for:

(1) Service of notice of issuance of the draft decision on:

[§76.16(c)(1) introductory text corrected at 62 FR 3464, Jan. 23, 1997]

(i) Any interested person;

(ii) The air pollution control agencies that have jurisdiction over a unit covered by the draft decision, are in a State whose air quality may be affected by the draft decision and that is contiguous to a State in which such a unit is located, or are in a State that is within 50 miles of a unit covered by the draft decision; and

(iii) On any federally recognized Indian Tribe in an area in which a unit covered by the draft decision is located, whose air quality may be affected by the draft decision and that is in an area that is contiguous to a State in which such a unit is located, or that is in an area that is within 50 miles of a unit covered by the draft decision;

(2) Publication of notice of issuance of the draft decision in the **Federal Register** and in any State publication designed to give general public notice in the States in which the units covered by the draft decision are located;

(3) A 30-day public comment period and extension or reopening of the comment period by the Administrator for good cause;

(4) A public hearing, upon request or on the Administrator's own motion, to the extent the Administrator determines that a public hearing will contribute to the decision-making process by clarifying one or more significant issues affecting the draft decision;

(5) Consideration by the Administrator of the comments on the draft decision received during the public comment period or any public hearing and written response by the Administrator to any such relevant comments;

(6) Notice of issuance of a final decision using the methods set forth in paragraphs (c)(1) and (2) of this section for providing notice of the draft decision; and

(7) Appeals, governed by part 78 of this chapter, of the final decision.

(d) If, after the Administrator issues a final decision under paragraph (c) of this section and takes the actions set forth in paragraphs (a)(1)(i) and (ii) of this section with regard to a State or group of States, a State Implementation Plan or Federal Implementation Plan covering the entire State or entire group of States is revised in a way that may affect the basis for the findings on which such decision is based, the Administrator may, upon petition or on his or her own motion, reconsider such decision.

(e) For purposes of this section, the term "State" shall mean one of the 48 contiguous States or

Copyright 1993-1997, The Bureau of National Affairs, Inc.

the District of Columbia.

Appendix A to Part 76—Phase I Affected Coal-Fired Utility Units With Group 1 or Cell Burner Boilers

Table 1.--Phase I Tangentially Fired Units

State	Plant	Unit	Operator
ALABAMA	EC GASTON	5	ALABAMA POWER CO.
GEORGIA	BOWEN	1BLR	GEORGIA POWER CO.
GEORGIA	BOWEN	2BLR	GEORGIA POWER CO.
GEORGIA	BOWEN	3BLR	GEORGIA POWER CO.
GEORGIA	BOWEN	4BLR	GEORGIA POWER CO.
GEORGIA	JACK MCDONOUGH	MB1	GEORGIA POWER CO.
GEORGIA	JACK MCDONOUGH	MB2	GEORGIA POWER CO.
GEORGIA	WANSLEY	1	GEORGIA POWER CO.
GEORGIA	WANSLEY	2	GEORGIA POWER CO.
GEORGIA	YATES	Y1BR	GEORGIA POWER CO.
GEORGIA	YATES	Y2BR	GEORGIA POWER CO.
GEORGIA	YATES	Y3BR	GEORGIA POWER CO.
GEORGIA	YATES	Y4BR	GEORGIA POWER CO.
GEORGIA	YATES	Y5BR	GEORGIA POWER CO.
GEORGIA	YATES	Y6BR	GEORGIA POWER CO.
GEORGIA	YATES	Y7BR	GEORGIA POWER CO.
ILLINOIS	BALDWIN	3	ILLINOIS POWER CO.
ILLINOIS	HENNEPIN	2	ILLINOIS POWER CO.
ILLINOIS	JOPPA	1	ELECTRIC ENERGY INC.
ILLINOIS	JOPPA	2	ELECTRIC ENERGY INC.
ILLINOIS	JOPPA	3	ELECTRIC ENERGY INC.
ILLINOIS	JOPPA	4	ELECTRIC ENERGY INC.
ILLINOIS	JOPPA	5	ELECTRIC ENERGY INC.

Copyright 1993-1997, The Bureau of National Affairs, Inc.

ILLINOIS	JOPPA	6	ELECTRIC ENERGY INC.
ILLINOIS	MEREDOSIA	5	CEN ILLINOIS PUB SER.
ILLINOIS	VERMILION	2	ILLINOIS POWER CO.
INDIANA	CAYUGA	1	PSI ENERGY INC.
INDIANA	CAYUGA	2	PSI ENERGY INC.
INDIANA	EW STOUT	50	INDIANAPOLIS PWR & LT.
INDIANA	EW STOUT	60	INDIANAPOLIS PWR & LT.
INDIANA	EW STOUT	70	INDIANAPOLIS PRW & LT.
INDIANA	HT PRITCHARD	6	INDIANAPOLIS PWR & LT.
INDIANA	PETERSBURG	1	INDIANAPOLIS PWR & LT.
INDIANA	PETERSBURG	2	INDIANAPOLIS PWR & LT.
INDIANA	WABASH RIVER	6	PSI ENERGY INC.
IOWA	BURLINGTON	1	IOWA SOUTHERN UTL.
IOWA	ML KAPP	2	INTERSTATE POWER CO.
IOWA	RIVERSIDE	9	IOWA-ILL GAS & ELEC.
KENTUCKY	ELMER SMITH	2	OWENSBORO MUN UTIL.
KENTUCKY	EW BROWN	2	KENTUCKY UTL CO.
KENTUCKY	EW BROWN	3	KENTUCKY UTL CO.
KENTUCKY	GHENT	1	KENTUCKY UTL CO.
MARYLAND	MORGANTOWN	1	POTOMAC ELEC PWR CO.
MARYLAND	MORGANTOWN	2	POTOMAC ELEC PWR CO.
MICHIGAN	JH CAMPBELL	1	CONSUMERS POWER CO.
MISSOURI	LABADIE	1	UNION ELECTRIC CO.
MISSOURI	LABADIE	2	UNION ELECTRIC CO.
MISSOURI	LABADIE	3	UNION ELECTRIC CO.
MISSOURI	LABADIE	4	UNION ELECTRIC CO.
MISSOURI	MONTROSE	1	KANSAS CITY PWR & LT.
MISSOURI	MONTROSE	2	KANSAS CITY PWR & LT.
MISSOURI	MONTROSE	3	KANSAS CITY PWR & LT.
NEW YORK	DUNKIRK	3	NIAGARA MOHAWK PWR.

Copyright 1993-1997, The Bureau of National Affairs, Inc.

Table 1.--Phase I Tangentially Fired Units--Contd.

State	Plant	Unit	Operator
NEW YORK	DUNKIRK	4	NIAGARA MOHAWK PWR.
NEW YORK	GREENIDGE	6	NY STATE ELEC & GAS.
NEW YORK	MILLIKEN	1	NY STATE ELEC & GAS.
NEW YORK	MILLIKEN	2	NY STATE ELEC & GAS.
OHIO	ASHTABULA	7	CLEVELAND ELEC ILLUM.
OHIO	AVON LAKE	11	CLEVELAND ELEC ILLUM.
OHIO	CONESVILLE	4	COLUMBUS STHERN PWR.
OHIO	EASTLAKE	1	CLEVELAND ELEC ILLUM.
OHIO	EASTLAKE	2	CLEVELAND ELEC ILLUM.
OHIO	EASTLAKE	3	CLEVELAND ELEC ILLUM.
OHIO	EASTLAKE	4	CLEVELAND ELEC ILLUM.
OHIO	MIAMI FORT	6	CINCINNATI GAS & ELEC.
OHIO	WC BECKJORD	5	CINCINNATI GAS & ELEC.
OHIO	WC BECKJORD	6	CINCINNATI GAS & ELEC.
PENNSYLVANIA	BRUNNER ISLAND	1	PENNSYLVANIA PWR & LT.
PENNSYLVANIA	BRUNNER ISLAND	2	PENNSYLVANIA PWR & LT.
PENNSYLVANIA	BRUNNER ISLAND	3	PENNSYLVANIA PWR & LT.
PENNSYLVANIA	CHESWICK	1	DUQUESNE LIGHT CO.
PENNSYLVANIA	CONEMAUGH	1	PENNSYLVANIA ELEC CO.
PENNSYLVANIA	CONEMAUGH	2	PENNSYLVANIA ELEC CO.
PENNSYLVANIA	PORTLAND	1	METROPOLITAN EDISON.
PENNSYLVANIA	PORTLAND	2	METROPOLITAN EDISON.
PENNSYLVANIA	SHAWVILLE	3	PENNSYLVANIA ELEC CO.
PENNSYLVANIA	SHAWVILLE	4	PENNSYLVANIA ELEC CO.
TENNESSEE	GALLATIN	1	TENNESSEE VAL AUTH.
TENNESSEE	GALLATIN	2	TENNESSEE VAL

Copyright 1993-1997, The Bureau of National Affairs, Inc.

TENNESSEE	GALLATIN	3	TENNESSEE VAL AUTH.
TENNESSEE	GALLATIN	4	TENNESSEE VAL AUTH.
TENNESSEE	JOHNSONVILLE	1	TENNESSEE VAL AUTH.
TENNESSEE	JOHNSONVILLE	2	TENNESSEE VAL AUTH.
TENNESSEE	JOHNSONVILLE	3	TENNESSEE VAL AUTH.
TENNESSEE	JOHNSONVILLE	4	TENNESSEE VAL AUTH.
TENNESSEE	JOHNSONVILLE	5	TENNESSEE VAL AUTH.
TENNESSEE	JOHNSONVILLE	6	TENNESSEE VAL AUTH.
WEST VIRGINIA	ALBRIGHT	3	MONONGAHELA POWER CO.
WEST VIRGINIA	FORT MARTIN	1	MONONGAHELA POWER CO.
WEST VIRGINIA	MOUNT STORM	1	VIRGINIA ELEC & PWR.
WEST VIRGINIA	MOUNT STORM	2	VIRGINIA ELEC & PWR.
WEST VIRGINIA	MOUNT STORM	3	VIRGINIA ELEC & PWR.
WISCONSIN	GENOA	1	DAIRYLAND POWER COOP.
WISCONSIN	SOUTH OAK CREEK	7	WISCONSIN ELEC POWER.
WISCONSIN	SOUTH OAK CREEK	8	WISCONSIN ELEC POWER.

Table 2.--Phase I Dry Bottom-Fired Units

State	Plant	Unit	Operator
ALABAMA	COLBERT	1	TENNESSEE VAL AUTH.
ALABAMA	COLBERT	2	TENNESSEE VAL AUTH.
ALABAMA	COLBERT	3	TENNESSEE VAL AUTH.
ALABAMA	COLBERT	4	TENNESSEE VAL AUTH.
ALABAMA	COLBERT	5	TENNESSEE VAL AUTH.
ALABAMA	EC GASTON	1	ALABAMA POWER CO.
ALABAMA	EC GASTON	2	ALABAMA POWER CO.
ALABAMA	EC GASTON	3	ALABAMA POWER CO.

Copyright 1993-1997, The Bureau of National Affairs, Inc.

ALABAMA	EC GASTON	4	ALABAMA POWER CO.
FLORIDA	CRIST	6	GULF POWER CO.
FLORIDA	CRIST	7	GULF POWER CO.
GEORGIA	HAMMOND	1	GEORGIA POWER CO.
GEORGIA	HAMMOND	2	GEORGIA POWER CO.
GEORGIA	HAMMOND	3	GEORGIA POWER CO.
GEORGIA	HAMMOND	4	GEORGIA POWER CO.
ILLINOIS	GRAND TOWER	9	CEN ILLINOIS PUB SER.
INDIANA	CULLEY	2	STHERN IND GAS & EL.
INDIANA	CULLEY	3	STHERN IND GAS & EL.
INDIANA	GIBSON	1	PSI ENERGY INC.
INDIANA	GIBSON	2	PSI ENERGY INC.
INDIANA	GIBSON	3	PSI ENERGY INC.
INDIANA	GIBSON	4	PSI ENERGY INC.
INDIANA	RA GALLAGHER	1	PSI ENERGY INC.
INDIANA	RA GALLAGHER	2	PSI ENERGY INC.
INDIANA	RA GALLAGHER	3	PSI ENERGY INC.
INDIANA	RA GALLAGHER	4	PSI ENERGY INC.
INDIANA	FRANK E RATTS	1SG1	HOOSIER ENERGY REC.
INDIANA	FRANK E RATTS	2SG1	HOOSIER ENERGY REC.
INDIANA	WABASH RIVER	1	PSI ENERGY INC.
INDIANA	WABASH RIVER	2	PSI ENERGY INC.
INDIANA	WABASH RIVER	3	PSI ENERGY INC.
INDIANA	WABASH RIVER	5	PSI ENERGY INC.
IOWA	DES MOINES	11	IOWA PWR & LT CO.
IOWA	PRAIRIE CREEK	4	IOWA ELEC LT & PWR.
KANSAS	QUINDARO	2	KS CITY BD PUB UTIL.
KENTUCKY	COLEMAN	C1	BIG RIVERS ELEC CORP.
KENTUCKY	COLEMAN	C2	BIG RIVERS ELEC CORP.
KENTUCKY	COLEMAN	C3	BIG RIVERS ELEC CORP.
KENTUCKY	EW BROWN	1	KENTUCKY UTL CO.
KENTUCKY	GREEN RIVER	5	KENTUCKY UTL CO.

Copyright 1993-1997, The Bureau of National Affairs, Inc.

KENTUCKY	HMP&L STATION 2	H1	BIG RIVERS ELEC CORP.
KENTUCKY	HMP&L STATION 2	H2	BIG RIVERS ELEC CORP.
KENTUCKY	HL SPURLOCK	1	EAST KY PWR COOP.
KENTUCKY	JS COOPER	1	EAST KY PWR COOP.
KENTUCKY	JS COOPER	2	EAST KY PWR COOP.
MARYLAND	CHALK POINT	1	POTOMAC ELEC PWR CO.
MARYLAND	CHALK POINT	2	POTOMAC ELEC PWR CO.
MINNESOTA	HIGH BRIDGE	6	NORTHERN STATES PWR.
MISSISSIPPI	JACK WATSON	4	MISSISSIPPI PWR CO.
MISSISSIPPI	JACK WATSON	5	MISSISSIPPI PWR CO.
MISSOURI	JAMES RIVER	5	SPRINGFIELD UTL.
OHIO	CONESVILLE	3	COLUMBUS STHERN PWR.
OHIO	EDGEWATER	13	OHIO EDISON CO.
OHIO	MIAMI FORT[1](1)	5-1	CINCINNATI GAS&ELEC.
OHIO	MIAMI FORT[1](2)	5-2	CINCINNATI GAS&ELEC.
OHIO	PICWAY	9	COLUMBUS STHERN PWR.
OHIO	RE BURGER	7	OHIO EDISON CO.

Table 2.--Phase I Dry Bottom-Fired Units--Contd.

State	Plant	Unit	Operator
OHIO	RE BURGER	8	OHIO EDISON CO.
OHIO	WH SAMMIS	5	OHIO EDISON CO.
OHIO	WH SAMMIS	6	OHIO EDISON CO.
PENNSYLVANIA	ARMSTRONG	1	WEST PENN POWER CO.
PENNSYLVANIA	ARMSTRONG	2	WEST PENN POWER CO.
PENNSYLVANIA	MARTINS CREEK	1	PENNSYLVANIA PWR & LT.
PENNSYLVANIA	MARTINS CREEK	2	PENNSYLVANIA PWR & LT.
PENNSYLVANIA	SHAWVILLE	1	PENNSYLVANIA ELEC CO.
PENNSYLVANIA	SHAWVILLE	2	PENNSYLVANIA ELEC CO.
PENNSYLVANIA	SUNBURY	3	PENNSYLVANIA PWR & LT.
PENNSYLVANIA	SUNBURY	4	PENNSYLVANIA PWR & LT.

Copyright 1993-1997, The Bureau of National Affairs, Inc.

TENNESSEE	JOHN-SONVILLE	7	TENNESSEE VAL AUTH.
TENNESSEE	JOHN-SONVILLE	8	TENNESSEE VAL AUTH.
TENNESSEE	JOHN-SONVILLE	9	TENNESSEE VAL AUTH.
TENNESSEE	JOHN-SONVILLE	10	TENNESSEE VAL AUTH.
WEST VIRGINIA	HARRISON	1	MONONGAHELA POWER CO.
WEST VIRGINIA	HARRISON	2	MONONGAHELA POWER CO.
WEST VIRGINIA	HARRISON	3	MONONGAHELA POWER CO.
WEST VIRGINIA	MITCHELL	1	OHIO POWER CO.
WEST VIRGINIA	MITCHELL	2	OHIO POWER CO.
WISCONSIN	JP PULLIAM	8	WISCONSIN PUB SER CO.
WISCONSIN	NORTH OAK CREEK[2](3)	1	WISCONSIN ELEC PWR.
WISCONSIN	NORTH OAK CREEK[2](4)	2	WISCONSIN ELEC PWR.
WISCONSIN	NORTH OAK CREEK[2](5)	3	WISCONSIN ELEC PWR.
WISCONSIN	NORTH OAK CREEK[2](6)	4	WISCONSIN ELEC PWR.
WISCONSIN	SOUTH OAK CREEK[2](7)	5	WISCONSIN ELEC PWR.
WISCONSIN	SOUTH OAK CREEK[2](8)	6	WISCONSIN ELEC PWR.

[1] Vertically fired boiler.
[2] Arch-fired boiler.

Table 3.--Phase I Cell Burner Technology Units

State	Plant	Unit	Operator
INDIANA	WARRICK	4	STHERN IND GAS & EL.
MICHIGAN	JH CAMPBELL	2	CONSUMERS POWER CO.
OHIO	AVON LAKE	12	CLEVELAND ELEC ILLUM.
OHIO	CARDINAL	1	CARDINAL OPERATING.
OHIO	CARDINAL	2	CARDINAL OPERATING.
OHIO	EASTLAKE	5	CLEVELAND ELEC ILLUM.
OHIO	GENRL JM GAVIN	1	OHIO POWER CO.

Copyright 1993-1997, The Bureau of National Affairs, Inc.

OHIO	GENRL JM GAVIN	2	OHIO POWER CO.
OHIO	MIAMI FORT	7	CINCINNATI GAS & EL.
OHIO	MUSKINGUM RIVER	5	OHIO POWER CO.
OHIO	WH SAMMIS	7	OHIO EDISON CO.
PENNSYLVANIA	HATFIELDS FERRY	1	WEST PENN POWER CO.
PENNSYLVANIA	HATFIELDS FERRY	2	WEST PENN POWER CO.
PENNSYLVANIA	HATFIELDS FERRY	3	WEST PENN POWER CO.
TENNESSEE	CUMBERLAND	1	TENNESSEE VAL AUTH.
TENNESSEE	CUMBERLAND	2	TENNESSEE VAL AUTH.
WEST VIRGINIA	FORT MARTIN	2	MONONGAHELA POWER CO.

Appendix B to Part 76—Procedures and Methods for Estimating Costs of Nitrogen Oxides Controls Applied to Group 1 Boilers

[Heading amended at 61 FR 67164, Dec. 19, 1996]

1. Purpose and Applicability

This technical appendix specifies the procedures, methods, and data that the Administrator will use in establishing "***the degree of reduction achievable through this retrofit application of the best system of continuous emission reduction, taking into account available technology, costs, and energy and environmental impacts; and which is comparable to the costs of nitrogen oxides controls set pursuant to subsection (b)(1) (of section 407 of the Act)." In developing the allowable NO_X emissions limitations for Group 2 boilers pursuant to subsection (b)(2) of section 407 of the Act, the Administrator will consider only those systems of continuous emission reduction that, when applied on a retrofit basis, are comparable in cost to the cost in constant dollars of low NO_X burner technology applied to Group 1 boilers.

The Administrator will evaluate the capital cost (in dollars per kilowatt electrical ($/kW)), the operating and maintenance costs (in $/year), and the cost-effectiveness (in annualized $/ton NO_X removed) of installed low NO_X burner technology controls over a range of boiler sizes (as measured by the gross electrical capacity of the associated generator in megawatt electrical (MW)) and utilization rates (in percent gross nameplate capacity on an annual basis) to develop estimates of the capital costs and cost-effectiveness for Group 1 boilers. The following units will be excluded from these determinations of the capital cost and cost-effectiveness of NO_X controls set pursuant to subsection (b)(1) of section 407 of the Act: (1) Units employing an alternative technology, or overfire air as applied to wall-fired boilers or separated overfire air as applied to

Copyright 1993-1997, The Bureau of National Affairs, Inc.

tangentially fired boilers, in lieu of low NO_X burner technology for reducing NO_X emissions; (2) units employing no controls, only controls installed before November 15, 1990, or only modifications to boiler operating parameters (e.g., burners out of service or fuel switching) for reducing NO_X emissions; and (3) units that have not achieved the applicable emission limitation.

[Section 1 amended at 61 FR 67164, Dec. 19, 1996]

2. Average Capital Cost for Low NO_X Burner Technology Applied to Group 1 Boilers

[Section 2 heading amended at 61 FR 67164, Dec. 19, 1996]

The Administrator will use the procedures, methods, and data specified in this section to estimate the average capital cost (in $/kW) of installed low NO_X burner technology applied to Group 1 boilers.

[Section 2 introductory text amended at 61 FR 67164, Dec. 19,1996]

2.1 Using cost data submitted pursuant to the reporting requirements in section 4 below, boiler-specific actual or estimated actual capital costs will be determined for each unit in the population specified in section 1 above for assessing the costs of installed low NO_X burner technology. The scope of installed low NO_X burner technology costs will include the following capital costs for retrofit application: (1) For the burner portion—burners or air and coal nozzles, burner throat and waterwall modifications, and windbox modifications; and, where applicable, (2) for the combustion air staging portion—waterwall modifications or panels, windbox modifications, and ductwork, and (3) scope adders or supplemental equipment such as replacement or additional fans, dampers, or ignitors necessary for the proper operation of the low NO_X burner technology. Capital costs associated with boiler restoration or refurbishment such as replacement of air heaters, asbestos abatement, and recasing will not be included in the cost basis for installed low NO_X burner technology. The scope of installed low NO_X burner technology retrofit capital costs will include materials, construction and installation labor, engineering, and overhead costs.

2.2 Using gross nameplate capacity (in MW) for each unit as reported in the National Allowance Data Base (NADB), boiler-specific capital costs will be converted to a $/kW basis.

2.3 Capital cost curves ($/kW versus boiler size in MW) or equations for installed low NO_X burner technology retrofit costs will be developed for: (1) Dry bottom wall fired boilers (excluding units applying cell burner technology) and (2) tangentially fired boilers.

2.4 [Removed]

[Section 2.4 removed at 61 FR 67164, Dec. 19, 1996]

3. [Reserved]

[Section 3 removed and reserved at 61 FR 67164, Dec. 19, 1996]

3.1 Boiler-specific estimates of annual tons NO_X removed by the installed low NO_X burner

Copyright 1993-1997, The Bureau of National Affairs, Inc.

technology will be determined for each unit in the population specified in section 1 above.

3.1.1 The baseline NO_X emission rate (in lb/mmBtu, annual average basis) will be estimated prior to retrofitting any low NO_X burner technology controls. For units that have installed and certified continuous emission monitoring systems for measuring the NO_X emission rate pursuant to part 75 of this chapter at least 120 days prior to the low NO_X burner technology retrofit, an estimate of the average annual uncontrolled NO_X emission rate will be developed using continuous emission monitoring data for the 120 days immediately before the low NO_X burner technology retrofit or another continuous 120-day or longer period as approved by the Administrator. (In cases where 120 days of certified and quality-assured continuous emission monitoring data are not available prior to the low NO_X burner technology retrofit, the Administrator may use continuous emission monitoring data over a shorter period or short-term test data to estimate the uncontrolled NO_X emission rate.) Continuous emission monitoring data or other emission rate measurements will be extrapolated to one year of unit operation.

3.1.2 The controlled NO_X emission rate (in lb/mmBtu, annual average basis) will be estimated after installation, shakedown, and/or optimization of all low NO_X burner technology controls have been completed and while the unit is complying with the applicable emission limitation (or alternative emission limitation). Continuous emission monitoring data submitted pursuant to part 75 of this chapter will be used for the 120 days immediately following installation and testing of the final low NO_X burner technology, provided the unit is complying with the applicable emission limitation (or alternative emission limitation), or another continuous 120-day or shorter period as approved by the Administrator. Continuous emission monitoring data will be extrapolated to one year of unit operation.

3.1.3 The NO_X emission reduction (in lb/mmBtu, annual average basis) achieved by the installed low NO_X burner technology will be estimated by subtracting the controlled NO_X emission rate defined in section 3.1.2 from the uncontrolled NO_X emission rate defined in section 3.1.1.

3.1.4 Annual estimates of the NO_X emission reduction achieved by the installed low NO_X burner technology will be converted to annual tons of NO_X removed by multiplying it by the annual heat input (in mmBtu). Unit heat input data submitted pursuant to part 75 of this chapter for calendar year 1994 or for the year immediately following installation and testing of the final low NO_X burner technology, will be used when such data are available prior to October 30, 1995. Such data will be adjusted to an annual basis whenever a nonrecurrent extended outage at the affected unit during the period has taken place.

3.2 The boiler-specific capital costs of installed low NO_X burner technology developed in section 2.1 will be annualized by multiplying them by a constant dollar capital recovery factor based on a 20-year economic life (e.g., 0.115).

3.3 Using cost data submitted pursuant to the reporting requirements in section 4, boiler-specific annual operating and maintenance cost increases (or decreases) will be determined for each unit in the population specified in section 1 above. The scope of the operating and maintenance costs (or savings) attributable to the installed low NO_X burner technology may, but

Copyright 1993-1997, The Bureau of National Affairs, Inc.

not necessarily will, include incremental increases (or decreases) in: maintenance labor and materials costs, operating labor costs, operating fuel costs, and secondary air fan electricity costs.

3.4 The average annual cost-effectiveness of installed low NO_X burner technology applied to Group 1, Phase I boilers will be estimated as follows: (1) The annualized capital costs defined in section 3.2 and the annual operating and maintenance cost increases (or decreases) defined in section 3.3 will be summed for all units in the population specified in section 1; and (2) these annualized costs will be divided by the sum of the NO_X emission reductions (in tons/year) achieved by the units in the population specified in section 1.

4. Reporting Requirements

4.1 The following information is to be submitted by each designated representative of a Phase I affected unit subject to the reporting requirements of §76.14(c):

4.1.1 Schedule and dates for baseline testing, installation, and performance testing of low NO_X burner technology.

4.1.2 Estimates of the annual average baseline NO_X emission rate, as specified in section 3.1.1, and the annual average controlled NO_X emission rate, as specified in section 3.1.2, including the supporting continuous emission monitoring or other test data.

4.1.3 Copies of pre-retrofit and post-retrofit performance test reports.

4.1.4 Detailed estimates of the capital costs based on actual contract bids for each component of the installed low NO_X burner technology including the items listed in section 2.1. Indicate number of bids solicited. Provide a copy of the actual agreement for the installed technology.

4.1.5 Detailed estimates of the capital costs of system replacements or upgrades such as coal pipe changes, fan replacements/upgrades, or mill replacements/upgrades undertaken as part of the low NO_X burner technology retrofit project.

4.1.6 Detailed breakdown of the actual costs of the completed low NO_X burner technology retrofit project where low NO_X burner technology costs (section 4.1.4) are disaggregated, if feasible, from system replacement or upgrade costs (section 4.1.5).

4.1.7 Description of the probable causes for significant differences between actual and estimated low NO_X burner technology retrofit project costs.

4.1.8 Detailed breakdown of the burner and, if applicable, combustion air staging system annual operating and maintenance costs for the items listed in section 3.3 before and after the installation, shakedown, and/or optimization of the installed low NO_X burner technology. Include estimates and a description of the probable causes of the incremental annual operating and maintenance costs (or savings) attributable to the installed low NO_X burner technology.

4.2 All capital cost estimates are to be broken down into materials costs, construction and installation labor costs, and engineering and overhead costs. All operating and maintenance costs are to be broken down into maintenance materials costs, maintenance labor costs, operating labor costs, and fan electricity costs. All capital and operating costs are to be reported in dollars with

Copyright 1993-1997, The Bureau of National Affairs, Inc.

the year of expenditure or estimate specified for each component.

Copyright 1993-1997, The Bureau of National Affairs, Inc.

Endnotes

1 (Popup)

[1] Vertically fired boiler.

2 (Popup)

[1] Vertically fired boiler.

3 (Popup)

[2] Arch-fired boiler.

4 (Popup)

[2] Arch-fired boiler.

5 (Popup)

[2] Arch-fired boiler.

6 (Popup)

[2] Arch-fired boiler.

7 (Popup)

[2] Arch-fired boiler.

8 (Popup)

[2] Arch-fired boiler.

Copyright 1993-1997, The Bureau of National Affairs, Inc.

CHAPTER I—ENVIRONMENTAL PROTECTION AGENCY

SUBCHAPTER C—AIR PROGRAMS

PART 77—EXCESS EMISSIONS

Proposed Regulation(s) Preamble(s) APC Analysis

HISTORY: 40 CFR 77; 58 FR 3757,Jan. 11, 1993; amended at 60 FR 17111, April 4, 1995

AUTHORITY:
42 U.S.C. 7601and 7651, et seq.

[Amended at 60 FR 17111, April 4, 1995.]

40 CFR 77.1 Purpose and scope.

(a) This part sets forth the excess emissions offset planning and offset penalty requirements under section 411 of the Clean Air Act, 42 U.S.C. 7401 , et seq., as amended by Public Law 101-549 (November 15, 1990). These requirements shall apply to the owners and operators and, to the extent applicable, the designated representative of each affected unit and affected source under the Acid Rain Program.

(b) Nothing in this part shall limit or otherwise affect the application of sections 112(r)(9), 113, 114, 120 , 303, 304 , or 306 of the Act, as amended. Any allowance deduction, excess emission penalty, or interest required under this part shall not affect the liability of the affected unit's and affected source's owners and operators for any additional fine, penalty, or assessment, or their obligation to comply with any other remedy, for the same violation, as ordered under the Act.

40 CFR 77.2 General.

Part 72 of this chapter, including §§72.2 (definitions), 72.3 (measurements, abbreviations, and acronyms), 72.4 (federal authority), 72.5 (State authority), 72.6 (applicability), 72.7 (new units exemption), 72.8 (retired units exemption), 72.9 (standard requirements), 72.10 (availability of information), and 72.11 (computation of time), shall apply to this part. The procedures for appeals of decisions of the Administrator under this part are contained in part 78 of this chapter .

40 CFR 77.3 Offset plans for excess emissions of sulfur dioxide.

Copyright 1993-1997, The Bureau of National Affairs, Inc.

(a) *Applicability*. The owners and operators of any affected unit that has excess emissions of sulfur dioxide in any calendar year shall be liable to offset the amount of such excess emissions by an equal amount of allowances from the unit's Allowance Tracking System account.

(b) *Deadline*. Not later than 60 days after the end of any calendar year during which an affected unit had excess emissions of sulfur dioxide (except for any increase in excess emissions under §72.91(b) of this chapter), the designated representative for the unit shall submit to the Administrator a complete proposed offset plan to offset those emissions. Each day after the 60-day deadline that the designated representative fails to submit a complete proposed offset plan shall be a separate violation of this part.

(c) *Number of Plans*. The designated representative shall submit a proposed offset plan for each affected unit with excess emissions of sulfur dioxide.

(d) *Contents of Plan* . A complete proposed offset plan shall include the following elements in a format prescribed by the Administrator for the unit and for the calendar year for which the plan is submitted:

(1) Identification of the unit.

(2) If the unit had excess emissions for the calendar year prior to the year for which the plan is submitted, an explanation of how and why the excess emissions occurred for the year for which the plan is submitted and a description of any measures that were or will be taken to prevent excess emissions in the future.

(3) The amount of excess emissions of sulfur dioxide (in tons/year) for the year for which the plan is submitted and the number of allowances required to be deducted from the unit's Allowance Tracking System account to offset the excess emissions.

(4) At the designated representative's option, the serial numbers of the allowances that are to be deducted from the unit's Allowance Tracking System account.

(5) Whether the allowances are to be deducted immediately from the unit's account or, if not, the date on which they are to be deducted.

(6) If the proposed offset plan does not propose a deduction of the amount of allowances under paragraph (d)(3) of this section from the compliance subaccount during the year after the year for which the plan is submitted, a demonstration that such a deduction will interfere with electric reliability.

40 CFR 77.4 Administrator's action on proposed offset plans.

(a) *Determination of Completeness*. The Administrator will determine whether the proposed offset plan is complete within 30 days of receipt by the Administrator. The offset plan shall be deemed complete if the Administrator fails to notify the designated representative to the contrary

Copyright 1993-1997, The Bureau of National Affairs, Inc.

within 30 days of receipt or when the Administrator approves the offset plan and deducts allowances in accordance with paragraph (b)(1) of this section.

(b) *Review of proposed offset plans.*

(1) If the designated representative submits a complete proposed offset plan for immediate deduction, from the unit's compliance subaccount, of all allowances required to offset excess emissions of sulfur dioxide, the Administrator will approve the proposed offset plan without further review and will serve written notice of any approval on the designated representative and on any persons entitled to written notice under paragraphs (g)(2)(i) (B), (C) and (D) of this section. The Administrator will also give notice of any approval in the FEDERAL REGISTER. The plan will be incorporated into the unit's Acid Rain permit in accordance with §72.84 (automatic permit amendment) and will not be subject to the requirements of paragraphs (d) through (k) of this section.

(2) Notwithstanding paragraph (b)(1) of this section, the Administrator may, in his or her discretion, require that the proposed offset plan under paragraph (b)(1) of this section be reviewed under paragraphs (c) through (k) of this section. The Administrator may exercise such discretion where he or she determines that review of the plan is necessary to ensure compliance with the emissions limitation and reduction goals or other purposes of title IV of the Act.

(3) If the designated representative submits a complete proposed offset plan that does not meet the requirements of paragraph (b)(1) of this section, the Administrator will review the plan under paragraphs (c) through (k) of this section.

(c) *Supplemental Information.*

(1) (i) Regardless of whether the proposed offset plan is complete under paragraph (a) of this section, the Administrator may require submission of any additional information that the Administrator determines is necessary to approve an offset plan.

(ii) Such supplemental information may include, but is not limited to:

(A) A description of the measures that are proposed to be taken to ensure that the unit will have sufficient allowances to offset the excess emissions and to prevent excess emissions in future years;

(B) A schedule of compliance with appropriate increments of progress for the proposed measures; and

(C) A schedule for the submission of progress reports, and supporting documentation, describing actions taken and actions remaining to be taken under the schedule of compliance and any proposed adjustments to the schedule of compliance.

(2) (i) The designated representative shall submit the information required under paragraph (c)(1) of this section within 30 days after he or she is notified of the requirement for supplemental

Copyright 1993-1997, The Bureau of National Affairs, Inc.

information unless the Administrator allows for additional time to collect and submit the information.

(ii) If the designated representative fails to submit the supplemental information within the required time period, the Administrator may disapprove the proposed offset plan.

(d) *Draft Offset Plan.*

(1) After the Administrator receives a complete proposed offset plan and any supplemental information, the Administrator will prepare a draft offset plan that incorporates in whole, in part, or with changes or conditions as appropriate, the proposed offset plan or disapprove a draft offset plan for the affected unit. Regardless of whether the Administrator required the submission of the information set forth in paragraph (c)(1)(ii) of this section, the draft offset plan may include, among other requirements and conditions as determined to be appropriate by the Administrator, the submission of schedules of compliance, progress reports, and monitoring and other information.

(2) The draft offset plan will be based on the information submitted by the designated representative for the affected unit and other relevant information.

(3) The Administrator will serve a copy of the draft offset plan and the statement of basis on the designated representative of the affected unit.

(4) The Administrator will provide a 30-day period for public comment, and opportunity to request a public hearing, on the draft offset plan or disapproval of a draft offset plan in accordance with the public notice required under paragraph (g)(1)(i)(A)of this section.

(e) *Offset Plan Administrative Record.*

(1) The Administrator will prepare an administrative record for an offset plan or disapproval of an offset plan. The administrative record will contain:

(i) The proposed offset plan and any supporting or supplemental information submitted by the designated representative;

(ii) The draft offset plan;

(iii) The statement of basis;

(iv) Copies of all documents relied on by the Administrator in approving or disapproving the draft offset plan (including any records of discussions or conferences with owners, operators or the designated representative of the unit or interested persons regarding the draft offset plan) or, for any such documents that are readily available, a statement of their location;

(v) Copies of all written public comments submitted on the draft offset plan or disapproval of a draft offset plan;

Copyright 1993-1997, The Bureau of National Affairs, Inc.

(vi) The record of any public hearing on the draft offset plan or disapproval of a draft offset plan;

(vii) The offset plan approved by the Administrator; and

(viii) Any response to public comments submitted on the draft offset plan or disapproval of a draft offset plan, including any documents cited in the response and any other documents relied on by the Administrator or, for any such documents that are readily available, a statement of their location.

(2) The Administrator will approve or disapprove an offset plan within 6 months of receipt of a complete proposed offset plan.

(f) *Statement of Basis.*

(1) The statement of basis will briefly set forth significant factual, legal, and policy considerations on which the Administrator relied in approving or disapproving the draft offset plan.

(2) The statement of basis will include:

(i) The reasons, and supporting authority, for approval or disapproval of any proposed offset plan that does not require deduction of allowances during the year after the year for which the plan is submitted, including references to applicable statutory or regulatory provisions and to the administrative record; and

(ii) The name, address, and telephone and facsimile number of the EPA office processing the approval or disapproval of the offset plan.

(g) *Opportunities for Public Comment on Draft Offset Plans.*

(1) *Generally.*

(i) The Administrator will give public notice of the following:

(A) The draft offset plan or disapproval of a draft offset plan and the opportunity for public comment and to request a public hearing; and

(B) Date, time, location, and procedures for any scheduled hearing on the draft offset plan or the disapproval of a draft offset plan.

(ii) Any public notice given under this section may be for the approval or disapproval of one or more draft offset plans.

(2) *Methods.* The Administrator will give the public notice required by this section by:

(i) Serving written notice on the following persons (except to the extent any such person has

Copyright 1993-1997, The Bureau of National Affairs, Inc.

waived his or her right to receive such notice):

(A) The designated representative;

(B) The State or local air pollution agency and any utility regulatory authority with jurisdiction over the owners of the unit covered by the proposed offset plan;

(C) The State or local air pollution agency for any contiguous State whose air quality may be affected by, or for any State located within a 50-mile radius of, the unit covered by the proposed offset plan; and

(D) Any interested person.

(ii) Giving notice by publication in the FEDERAL REGISTER and in a newspaper of general circulation in the area where the unit is located or in a State publication designed to give general public notice.

(3) *Contents*. All public notices issued under this part will contain the following information:

(i) Identification of the EPA office processing the approval or disapproval of the draft offset plan for which the notice is being given.

(ii) Identification of the designated representative for the affected unit.

(iii) Identification of each affected unit covered by the proposed offset plan.

(iv) The amount of excess emissions that must be offset and the date on which the allowances are proposed to be deducted.

(v) The address and office hours of a public location where the administrative record is available for public inspection and a statement that all information submitted by the designated representative and not protected as confidential pursuant to section 114(c) of the Actis available for public inspections as part of the administrative record.

(vi) For public notice under paragraph (g)(1)(i)(A) of this section, a brief description of the public comment procedures, including:

(A) A 30-day public comment period beginning the date of publication of the notice or, in the case of an extension or reopening of the public comment period, such period as the Administrator deems appropriate;

(B) The address where public comments should be sent;

(C) Required formats and contents for public comment;

(D) An opportunity to request a public hearing to occur not earlier than 15 days after public notice is given and the location, date, time, and procedures of any scheduled public hearing; and

Copyright 1993-1997, The Bureau of National Affairs, Inc.

(E) Any other means by which the public may participate.

(4) *Extensions and Reopenings of the Public Comment Period.* On the Administrator's own motion, or on the request for any person, the Administrator may, at his or her discretion, extend or reopen the public comment period where he or she finds that doing so will contribute to the decision-making process by clarifying one or more significant issues affecting the draft offset plan or disapproval of a draft offset plan. Notice of any such extension or reopening will be given under paragraph (g)(1)(i)(A) of this section.

(h) *Public comments.*

(1) General. During the public comment period, any person may submit written comments on the draft offset plan or disapproval of a draft offset plan.

(2) Form.

(i) Comments shall be submitted in duplicate.

(ii) The submission shall clearly indicate the draft offset plan approval or disapproval to which the comments apply.

(iii) The submission shall clearly indicate the name of the commenter, his or her interest, and his or her affiliation, if any, to owners and operators of any unit covered by the proposed offset plan.

(3) Contents. Timely comments on any aspect of a draft offset plan or disapproval of a draft offset plan will be considered unless they concern issues that are not relevant, such as:

(i) The environmental effects of acid rain, acid deposition, sulfur dioxide, or nitrogen oxides generally; and

(ii) Offset plan approval procedures or actions on other proposed offset plans that are not relevant to approval or disapproval of the draft offset plan in question.

(4) Persons who do not wish to raise issues on the draft offset plan or denial of a draft offset plan, but who wish to be notified of any subsequent actions concerning such matter, may so indicate during the public comment period or at any other time. The Administrator will place their names on a list of interested persons.

(i) *Opportunity for Public Hearing.*

(1) During the public comment period, any person may request a public hearing. A request for a public hearing shall be made in writing and shall state the issues proposed to be raised in the hearing.

(2) On the Administrator's own motion or on the request of any person, the Administrator may, at his or her discretion, hold a public hearing whenever the Administrator finds that such a hearing

Copyright 1993-1997, The Bureau of National Affairs, Inc.

will contribute to the decision-making process by clarifying one or more significant issues affecting the draft offset plan or disapproval of a draft offset plan. Public hearings will not be held on issues under paragraphs (h)(3)(i) and (ii) of this section.

(3) During a public hearing under this section, any person may submit oral or written comments concerning the draft offset plan or disapproval of a draft offset plan. The Administrator may set reasonable limits on the time allowed for oral statements and will require the submission of written summaries of each oral statement.

(4) The Administrator will assure that a record is made of the hearing.

(j) *Response to Comments.*

(1) The Administrator will consider comments on the draft offset plan or disapproval of a draft offset plan received during the public comment period and any public hearing. The Administrator is not required to consider comments otherwise received.

(2) In approving or disapproving an offset plan, the Administrator will:

(i) Identify any draft offset plan provision or portion of the statement of basis that has been changed and the reasons for the change; and

(ii) Briefly describe and respond to relevant comments under paragraph (j)(1) of this section.

(k) *Approval and Effective Date of Excess Emissions Offset Plans.*

(1) After the close of the public comment period, the Administrator will approve an offset plan requiring allowance deductions in an amount equal to the unit's tons of excess emissions or disapprove an offset plan. The Administrator will serve a copy of any approved offset plan and the response to comment on the designated representative for the affected unit involved and serve written notice of the approval or disapproval of the offset plan on any persons who are entitled to written notice under paragraphs (g)(2)(i) (B), (C), and (D) of this section. The Administrator will also give notice in the FEDERAL REGISTER.

(2) The Administrator will approve an offset plan requiring deduction from the unit's compliance subaccount, by December 31 of the year after the year for which the report is submitted, of all allowances necessary to offset the excess emissions except to the extent the designated representative of the unit demonstrates that such a deduction will interfere with electric reliability.

(3) Upon approval of the offset plan by the Administrator, the offset plan will be incorporated into the Acid Rain permit in accordance with §72.84 (automatic permit amendment) and shall supersede any inconsistent provision of the permit.

40 CFR 77.5 Deduction of allowances to offset excess emissions of sulfur dioxide.

Copyright 1993-1997, The Bureau of National Affairs, Inc.

(a) The Administrator will deduct allowances to offset excess emissions in accordance with the offset plan approved under §77.4(b)(1) or (k) or in accordance with §72.91(b) of this chapter .

(b) The designated representative shall hold enough allowances in the appropriate compliance subaccount to cover the deductions to be made in accordance with paragraph (a) or paragraph (c) of this section.

(c) If the designated representative does not submit a timely and complete proposed offset plan, or if the Administrator disapproves a proposed offset plan under §77.4(c) or (k), the Administrator will immediately deduct allowances, from the unit's compliance subaccount on a first-in, first-out basis in accordance with §73.35(c)(2)of this chapter, equal to the amount of the unit's excess emissions of sulfur dioxide.

(d) If a compliance subaccount does not contain adequate allowances to offset the excess emissions, the Administrator will deduct the required allowances whenever allowances are recorded to that account.

40 CFR 77.6 Penalties for excess emissions of sulfur dioxide and nitrogen oxides.

(a) If excess emissions of sulfur dioxide or nitrogen oxides occur at an affected unit during any year, the owners and operators of the affected unit shall pay, without demand, an excess emissions penalty, as calculated under paragraph (b) of this section. Such payment shall be submitted to the Administrator no later than 60 days after the end of any year during which excess emissions occurred at an affected unit or, for any increase in excess emissions of sulfur dioxide determined after adjustments made under § 72.91(b) of this chapter, or §74.44(c)(2) of this chapter, by July 31 of the year in which the adjustments are made.

[§77.6(a) amended at 60 FR 17111, April 4, 1995]

(b) *Penalty Formula.*

(1) The following formulas shall be used to determine the excess emissions penalty:
Penalty for excess emissions of sulfur dioxide=$2000/ton × annual adjustment factor × tons of excess emissions of sulfur dioxide.
Penalty for excess emissions of nitrogen oxides=$2000/ton × annual adjustment factor × tons of excess emissions of nitrogen oxides.

(i) The annual adjustment factor will be calculated as follows:
Annual adjustment factor=1+ {[CPI(year)-CPI(1990)]/CPI(1990)}
where:
(A) "CPI(year)" is the Consumer Price Index as defined in §72.2 of this chapter and "year" is the year in which the unit had excess emissions.
(B) "CPI(1990)" is the Consumer Price Index for 1990, as defined in §72.2 of this chapter.

Copyright 1993-1997, The Bureau of National Affairs, Inc.

(ii) The Administrator will publish the annual adjustment factor in the FEDERAL REGISTER by October 15 of each year beginning in 1995.

(2) The penalty may be rounded to the nearest dollar after completing the calculation in paragraph (b)(1)(i) of this section.

(3) The penalty for excess emissions of sulfur dioxide shall be paid separately from the payment for excess emissions of nitrogen oxides. Each payment shall be accompanied by a document, in a format prescribed by the Administrator, indicating the unit for which the payment is made, whether the payment is for excess emissions of sulfur dioxide or nitrogen oxides, the number of tons of excess emissions, the penalty amount, and the check or money order number of the payment.

(c) If an excess emissions penalty due under this part is not paid on or before the applicable deadline under paragraph (a) of this section, the penalty shall be subject to interest charges in accordance with the Debt Collection Act (31 U.S.C. 3717). Interest shall begin to accrue on the date on which the Administrator mails, to the designated representative of the unit with excess emissions, a demand notice for the payment.

(d) (1) Except for wire transfers made in accordance with paragraph (d)(2) of this section, payments of penalties shall be made by money order, cashier's check, certified check, or U.S. Treasury check made payable to the "U.S. EPA."

(2) Payments made under paragraph (c)(1)of this section shall be mailed to the following address, unless the Administrator has notified the designated representative of a different address: U.S. EPA: Headquarters Accounting Operations Branch, Acid Rain Excess Emissions Penalties, P.O. Box 952491, St. Louis, MO 63195-2491.

(3) Payments of penalties of $25,000 or more may be made by wire transfer to the U.S. Treasury at the Federal Reserve Bank of New York.

(e) If the Administrator determines that overpayment has been made, he or she will refund the overpayment without interest, as promptly as administratively possible.

(f) Excess emissions in any year resulting directly from an order issued in that year under section 110(f) of the Act shall not be subject to the penalty payment requirements of this section; *provided*that the designated representative of any unit subject to such order shall advise the Administrator within 30 days of issuance of the order that the order will result in such excess emissions.

CHAPTER 1—ENVIRONMENTAL PROTECTION AGENCY

SUBCHAPTER C—AIR PROGRAMS

Copyright 1993-1997, The Bureau of National Affairs, Inc.

PART 78—APPEAL PROCEDURES FOR ACID RAIN PROGRAM

Proposed Regulation(s) Preamble(s) APC Analysis

HISTORY: 40 CFR 78; 58 FR 3760,Jan. 11, 1993; amended at 60 FR 17111, April 4, 1995

AUTHORITY:
42 U.S.C. 7601 and 7651, *et. seq.*

40 CFR 78.1 Purpose and scope.

(a) This part shall govern appeals of any decision of the Administrator under the Acid Rain Program that, in the absence of an administrative appeal, will be final agency action; *provided* that matters listed in §78.3(d) and interim decisions, such as draft Acid Rain permits or proposed alternative monitoring systems, may not be appealed.

(b) The decisions of the Administrator that may be appealed include but are not limited to:

(1) Under part 72 of this chapter ;

(i) The determination of incompleteness of an Acid Rain permit application;

(ii) The issuance or denial of an Acid Rain permit and approval or disapproval of a compliance option by the Administrator;

(iii) The approval or disapproval of an early ranking application for Phase I extension under §72.42 of this chapter;

(iv) The final determination of whether a technology is a qualified repowering technology under §72.44 of this chapter;

(v) The issuance or denial of a written exemption for new units or retired units under §§72.7 and 72.8 of this chapter;

(vi) The approval or disapproval of a permit revision;

(vii) The decision on the deduction or return of allowances under §§72.41, 72.42, 72.43, 72.44, 72.91(b), and 72.92 (a) and (c) of this chapter; and

(viii) The failure to issue an Acid Rain permit in accordance with the deadline under §72.74(b) of this chapter.

Copyright 1993-1997, The Bureau of National Affairs, Inc.

(2) Under part 73 of this chapter,

(i) The decision on a claim of error in a transfer recordation;

(ii) The decision on the allocation of allowances from the Conservation and Renewal Energy Reserve;

(iii) The decision on the allocation of allowances under regulations implementing sections 404(e), 405(g)(4), 405(i)(2), and 410(h) of the Act;

(iv) The decision on the allocation of allowances under part 73, subpart F of this chapter;

(v) The decision on the sale or return of allowances and transfer of proceeds under part 73,subpart E; and

(vi) The decision on the deduction of allowances under §73.35(b) of this chapter.

[§78.1(b)(3) and (4) revised at 60 FR 17111, April 4, 1995]

(3) Under part 74 of this chapter ,

(i) The determination of incompleteness of an opt-in permit application;

(ii) The issuance or denial of an opt-in permit and approval or disapproval of the transfer of allowances for the replacement of thermal energy;

(iii) The approval or disapproval of a permit revision to an opt-in permit;

(iv) The decision on the deduction or return of allowances under subpart E of part 74 of this chapter;

(4) Under part 75 of this chapter ,

(i) The decision on a petition for approval of an alternative monitoring system;

(ii) The approval or disapproval of a monitoring system certification or recertification;

(iii) The finalization of annual emissions data, including retroactive adjustment based on audit;

(iv) The determination of the percentage of emissions reduction achieved by qualifying Phase I technology; and

(v) The determination on the acceptability of parametric missing data procedures for a unit equipped with add-on controls for sulfur dioxide and nitrogen oxides in accordance with part 75 of this chapter.

(5) Under part 77 of this chapter , the determination of incompleteness of an offset plan and the approval or disapproval of an offset plan under §77.4 of this chapter and the deduction of

Copyright 1993-1997, The Bureau of National Affairs, Inc.

allowances under §77.5(c) of this chapter.

[§78.1(b)(5) added at 60 FR 17111, April 4, 1995]

(c) In order to appeal a decision under paragraph (a) of this section, a person shall file a petition for administrative review with the Environmental Appeals Board under §78.3. The Environmental Appeals Board will, consistent with §78.6, either:

(1) Issue an order deciding the appeal; or

(2) Where there is a disputed issue of fact material to the contested portions of the decision, refer the proceeding to the Chief Administrative Law Judge, who will designate an Administrative Law Judge to conduct an evidentiary hearing to decide the disputed issue of fact. If the proposed decision is contested or the Environmental Appeals Board decides to review the proposed decision, the Environmental Appeals Board will issue an order deciding the appeal.

(d) Questions arising at any stage of a proceeding that are not addressed in this part will be resolved at the discretion of the Environmental Appeals Board or the Presiding Officer.

40 CFR 78.2 General.

Part 72 of this chapter, including sections 72.2 (definitions), 72.3 (measurements, abbreviations, and acronyms), 72.4 (federal authority), 72.5 (State authority), 72.6 (applicability), 72.7 (new units exemption), 72.8 (retired units exemption), 72.9 (standard requirements), 72.10 (availability of information), and 72.11 (computation of time), shall apply to this part.

40 CFR 78.3 Petition for administrative review and request for evidentiary hearing.

(a) (1) The following persons may petition for administrative review of a decision of the Administrator that is made under parts 72, 74, 75, 76, and 77 of this chapter and that is appealable under §78.1(a) of this part:

[§78.3(a)(1) introductory text amended at 60 FR 71111, April 4, 1995]

(i) The designated representative for the unit covered by the decision;

(ii) The authorized account representative for an account covered by the decision; and

(iii) Any interested person.

(2) The following persons may petition for administrative review of a decision of the Administrator that is made under part 73 of this chapter and that is appealable under §78.1(a):

(i) The authorized account representative for any Allowance Tracking System account covered by the decision; and

(ii) With regard to the decision on the allocation of allowances from the Conservation and

Copyright 1993-1997, The Bureau of National Affairs, Inc.

Renewable Energy Reserve, the certifying official whose application is covered by the decision.

(b) (1) Within 60 days following issuance of a decision under §78.1 of this part by the Administrator, any person under paragraph (a) of this section may file a petition with the Environmental Appeals Board for administrative review of the decision. If no petition for administrative review of a decision under §78.1 of this part is filed within such period, the decision shall become final agency action.

(2) The petition may include a request for an evidentiary hearing to resolve any disputed issue of material fact concerning the decision.

(3) At the same time that the petition for administrative review is filed, the petitioner shall:

(i) Serve a copy of the petition on the designated representative or authorized account representative under paragraph (a)(1) and (2) of this section (unless the designated representative or authorized account representative is the petitioner) and the Administrator; and

(ii) Mail a notice of the petition to the persons entitled to written notice under §72.65(b)(1)(ii), (iii) , and (iv) of this chapter.

(c) The petition for administrative review under this part shall state with specificity:

(1) Each material factual and legal issue alleged to be in dispute and any such factual issue for which an evidentiary hearing is sought;

(2) A clear and concise statement of the nature and scope of the interest of the petitioner;

(3) A clear and concise brief in support of the petition, explaining why the factual or legal issues are material and, if an evidentiary hearing is requested, why direct and cross-examination of witnesses is necessary to resolve such factual issues;

(4) If an evidentiary hearing is requested, the time estimated to be necessary for an evidentiary hearing;

(5) If an evidentiary hearing is requested, a certified statement that, in the event of an evidentiary hearing, and without cost or expense to any other party, any of the following persons shall be available to appear and testify:

(i) The petitioner; and

(ii) Any officer, director, employee, consultant, or agent of the petitioner.

(6) Specific references to the contested portions of the decision;

(7) Any revised or alternative action of the Administrator sought by the petitioner as necessary to implement the requirements, purposes, or policies of title IV of the Act; and

Copyright 1993-1997, The Bureau of National Affairs, Inc.

(8) Identification of any portion of the decision that the petitioner believes should be stayed pending resolution of the appeal.

(d) In no event shall a petition for administrative review be filed, or review be available under this part, with regard to:

(1) A decision under part 73 of this chapter to which the claim of error procedure applies, but for which no claim of error notification was submitted, under part 73 of this chapter;

(2) Any provision or requirement of parts 72, 73, 74, 75, 76, or 77 of this chapter, including any standard requirement under §72.9 of this chapter and any emissions monitoring or reporting requirements under part 75 of this chapter ;

[§78.3(d)(2) amended at 60 FR 71111, April 4, 1995]

(3) The reliance by the Administrator on a certificate of representation submitted by a designated representative or a certification statement submitted by an authorized account representative under the Acid Rain Program; and

(4) Actions of the Administrator under sections 112(r), 113, 114, 120 , 301, and 303 of the Act.

40 CFR 78.4 Filings.

(a) All original filings made under this part shall be signed by the person making the filing or by an attorney or authorized representative. Any filings on behalf of owners and operators of an affected unit or affected source shall be signed by the designated representative. Any filings on behalf of persons with an interest in allowances in a general account shall be signed by the authorized account representative. The name, address, telephone number, and facsimile number of the person making the filing shall be provided with the filing.

(b) (1) All data and information referred to, or in any way relied upon, in any filings made under this part shall be included in full and may not be incorporated by reference, unless the data or information is contained in the administrative record for the decision being appealed.

(2) Notwithstanding paragraph (b)(1) of this section, State or federal statutes, regulations, and judicial decisions published in a national reporter system, officially issued EPA documents of general applicability, and any other publicly and generally available reference material may be incorporated by reference. Any person incorporating such materials by reference shall provide copies of the materials as instructed by the Environmental Appeals Board or the Presiding Officer.

(3) If any part of any filing is in a foreign language, it shall be accompanied by an English translation verified by the person making the translation, under oath, to be complete and accurate, together with the name, address, and a brief statement of the qualifications of the person making the translation. Translations filed of material originally produced in a foreign language shall be

Copyright 1993-1997, The Bureau of National Affairs, Inc.

accompanied by copies of the original material.

(4) Where relevant data or information is contained in a document also containing irrelevant matter, either the irrelevant matter shall be deleted or an index to the relevant portions of the document shall be included in the document.

(c) (1) Failure to comply with the requirements of this section or any other requirement in this part may result in the noncomplying portions of the filing being excluded from consideration. If the Environmental Appeals Board or the Presiding Officer determines on motion by any party or *sua sponte* that a filing fails to meet any requirement of this part, the Environmental Appeals Board or Presiding Officer may return the filing, together with a reference to the applicable requirements on which the determination is based. A person whose filing has been rejected has 7 days, from the date the returned filing is mailed, to correct the filing in conformance with this part and refile it, unless the Environmental Appeals Board or Presiding Officer authorizes a longer time based on good cause shown.

(2) The making of a filing shall not mean or imply that the filing, in fact, meets all applicable requirements, that the filing contains reasonable grounds for the action requested, or that the action requested is in accordance with law.

(d) An original and two copies of any written filing under this part shall be filed with the Environmental Appeals Board unless a proceeding is pending before a Presiding Officer, in which case they shall be filed with the Hearing Clerk (except as provided under §78.19(d)) of this part.

(e) (1) The party making any filing in a proceeding under this part shall also serve a copy of the filing on each party to the proceeding, or, with regard to a petition for administrative review, on the persons specified in §78.3(b)(3) of this part.

(2) Every filing made under this part shall be accompanied by a certificate of service citing the date, place, time, and manner of service and the names of the persons served.

(f) The Hearing Clerk will maintain and furnish, to any person upon request, the official service list containing the name, service address, telephone, and facsimile numbers of each party to a proceeding under this part and his or her attorney or duly authorized representative.

(g) Affidavits filed under this part shall be made on personal knowledge and belief, set forth only those facts that are admissible into evidence under §78.5 of this part, and show affirmatively that the affiant is competent to testify to the matters stated therein.

40 CFR 78.5 Limitation on filing or presenting new evidence and raising new issues.

(a) Where there was an opportunity for public comment, or to submit a claim of error notification, prior to the decision that is subject to appeal, no evidence shall be filed or presented, and no issues raised, in a proceeding under this part that were not filed, presented, or raised

Copyright 1993-1997, The Bureau of National Affairs, Inc.

during the public comment period, absent a showing of good cause explaining the party's failure to do so during the public comment period or in the claim of error notification. Good cause shall include any instance where the party seeking to file or present new evidence or raise a new issue shows that the evidence could not have reasonably been ascertained, filed, or presented, the issue could not have reasonably been ascertained or raised, or that the materiality of the new evidence or issue could not have reasonably been anticipated, prior to the close of the public comment period or the period for submitting a claim of error notification.

(b) If an evidentiary hearing is granted, no evidence shall be filed or presented on questions of law or policy or on matters not subject to challenge in the evidentiary hearing.

40 CFR 78.6 Action on petition for administrative review.

(a) If no evidentiary hearing concerning the petition for review is requested or is to be held, the Environmental Appeals Board will issue an order under §78.20(c) of this part.

(b) (1) The Environmental Appeals Board may grant a request for an evidentiary hearing, or schedule an evidentiary hearing *sua sponte*, if the Environmental Appeals Board finds that there are disputed issues of fact material to contested portions of the decision and determines, in its discretion, that an opportunity for direct- and cross-examination of witnesses may be necessary in order to resolve these factual issues.

(2) To the extent the Environmental Appeals Board grants a request for an evidentiary hearing, in whole or in part, it will:

(i) Identify the portions of the decision that have been contested, and the disputed factual issues that have been raised by the petitioner with regard to which the evidentiary hearing has been granted; and

(ii) Refer the disputed factual issues to the Chief Administrative Law Judge for decision and, in its discretion, may also refer all or a portion of the remaining legal, policy, or factual issues to the Chief Administrative Law Judge for decision.

(3) (i) After issues are referred to the Chief Administrative Law Judge, he or she will designate an Administrative Law Judge as Presiding Officer to conduct the evidentiary hearing.

(ii) Notwithstanding paragraph (b)(3)(i) of this section, if all parties waive in writing their right to have an Administrative Law Judge designated as the Presiding Officer, the Administrator may designate a lawyer permanently or temporarily employed by EPA and without any prior connection with the proceeding to serve as Presiding Officer.

40 CFR 78.7 Stays of contested Acid Rain requirements pending appeal.

(a) A contested decision of the Administrator may be stayed, in whole or in part consistent with paragraph (b) of this section, by the Environmental Appeals Board or the Presiding Officer upon

Copyright 1993-1997, The Bureau of National Affairs, Inc.

request of a party during a proceeding under this part only to the extent necessary to prevent irreparable injury pending final agency action.

(b) The following requirements shall in no event be stayed due to any appeal of a decision of the Administrator and shall be fully effective and enforceable:

(1) The allowance allocations for any year during which the appeal proceeding is pending or is being conducted;

(2) Any standard requirements under §72.9 of this chapter;

(3) The emissions monitoring and reporting requirements applicable to the affected units at an affected source under part 75 of this chapter;

(4) Uncontested provisions of the decision; and

(5) The terms of a certificate of representation submitted by a designated representative under part 72, subpart B of this chapter or a certification statement submitted by an authorized account representative under part 73, subpart C of this chapter.

(c) The permit shield under §72.51 of this chapter shall continue to be in effect.

(d) The Environmental Appeals Board or Presiding Officer shall specify which provisions of the decision shall be stayed.

40 CFR 78.8 Consolidation and severance of appeals proceedings.

(a) The Environmental Appeals Board or Presiding Officer has the discretion to consolidate, in whole or in part, two or more proceedings under this part whenever it appears that a joint proceeding on any or all of the matters at issue in the proceedings will be in the interest of justice, will expedite or simplify consideration of the issues, and will not prejudice any party. Consolidation of proceedings under this paragraph (a) will not affect the right of any party to raise issues that might have been raised had there been no consolidation.

(b) The Environmental Appeals Board or Presiding Officer has the discretion to sever issues or parties from a proceeding under this part whenever it appears that separate proceedings will be in the interest of justice, will expedite or simplify consideration of the issues, and will not prejudice any party.

40 CFR 78.9 Notice of the filing of petition for administrative review.

The Administrator will publish in the FEDERAL REGISTER a notice stating that a petition for administrative review of a decision of the Administrator has been filed and specifying any request in the petition for an evidentiary hearing.

40 CFR 78.10 Ex parte communications during pendency of a hearing.

Copyright 1993-1997, The Bureau of National Affairs, Inc.

(a) (1) No party or interested person outside EPA, representative of a party or interested person, or member of the EPA trial staff shall make, or knowingly cause to be made, to any member of the decisional body an *ex parte* communication on the merits of a proceeding under this part.

(2) No member of the decisional body shall make, or knowingly cause to be made, to any party or interested person outside EPA, representative of a party or interested person, or member of the EPA trial staff, an *ex parte* communication on the merits of any proceeding under this part.

(3) A member of the decisional body who receives, makes, or knowingly causes to be made an *ex parte* communication prohibited by this paragraph shall file with the Environmental Appeals Board (or, if the proceeding is pending before an Administrative Law Judge, with the Hearing Clerk) for inclusion in the record of the proceeding under this part any such written *ex parte* communication and memoranda stating the substance of any such oral *ex parte* communication.

(b) Whenever any member of the decisional body receives an *ex parte* communication made, or knowingly caused to be made by a party or representative of a party to a proceeding under this part, the person presiding over the proceedings then in progress may, to the extent consistent with justice, require the party to show good cause why its claim or interest in the proceedings should not be dismissed, denied, disregarded, or otherwise adversely affected on account of these *ex parte* communications.

(c) The prohibitions of paragraph (a) of this section shall begin to apply upon publication by the Administrator of the notice of the filing of a petition under §78.9 of this part. This prohibition terminates on the date of final agency action.

40 CFR 78.11 Intervenors.

(a) Within 30 days after notice is given under §78.9 of this part that the petition for administrative review has been filed, any person listed in §78.3(a) of this part may file a motion for leave to intervene in the proceeding. A motion for leave to intervene under this section shall set forth the grounds for the proposed intervention and may respond to the petition for administrative review. Late motions to intervene may be granted only for good cause shown.

(b) The Environmental Appeals Board of Presiding Officer will grant a motion to intervene only upon an express finding that:

(1) The motion to intervene raises matters relevant to the factual or legal issues to be reviewed;

(2) The intervenor consented to be bound by all stipulations previously entered into by the existing parties, and all orders previously issued, in the proceeding; and

(3) The intervention will promote the interests of justice and will not cause undue delay or prejudice to the rights of the existing parties.

Copyright 1993-1997, The Bureau of National Affairs, Inc.

40 CFR 78.12 Standard of review.

(a) On appeal of a decision of the Administrator prior to which there was an opportunity for public comment, or to submit a claim of error notification:

(1) Except as provided under paragraph (a)(2) of this section, the petitioner shall have the burden of going forward and of persuasion to show that a finding of fact or conclusion of law underlying the decision is clearly erroneous or that an exercise of discretion or policy determination underlying the decision is arbitrary and capricious or otherwise warrants review.

(2) The owners and operators of the source or unit involved shall have the burden of persuasion that an Acid Rain permit or a written exemption under §§72.7 or 72.8 of this chapter was properly issued or should be issued.

(b) On appeal of a decision of the Administrator not covered by paragraph (a) of this section, the Administrator shall have the burden of going forward to show the rational basis for the decision. The petitioner shall have the burden of persuasion to show that a finding of fact or conclusion of law underlying the decision is clearly erroneous or that an exercise of discretion or policy determination underlying the decision is arbitrary and capricious or otherwise warrants review.

40 CFR 78.13 Scheduling orders and pre-hearing conferences.

(a) If a request for an evidentiary hearing is granted, the Presiding Officer will issue an order scheduling the following:

(1) The filing by each party of a narrative statement of position on each factual issue in controversy.

(2) The identification of any witness that a party expects to call and of any written testimony, documents, papers, exhibits, or other materials that a party expects to introduce into evidence. At the request of the Presiding Officer, the party shall include a brief narrative summary of any witness' expected testimony and of any such materials.

(3) The filing of written testimony, in accordance with §78.14(b) of this part, and other evidence in support of a narrative statement.

(4) The filing of any motions by any party, including motions for the production of documentation, data, or other information material to the disputed facts to be addressed at the hearing.

(b) The Presiding Officer may also, on motion or *sua sponte*, schedule one or more pre-hearing conferences on the record to address any of the following:

(1) Simplification, clarification, amplification, or limitation of the issues.

Copyright 1993-1997, The Bureau of National Affairs, Inc.

(2) Admissions and stipulations of facts and determinations of the genuineness of documents.

(3) Objections to the introduction into evidence at the hearing of any written testimony or other submissions proposed by a party; *provided* that at any time before the end of the hearing, any party may make, and the Presiding Officer may consider and rule upon, a motion to strike testimony or other evidence (other than evidence included in the administrative record (if any) under §72.63 of this chapter) on the grounds of relevance, competency, or materiality.

(4) Taking official notice of any matters.

(5) Grouping of parties with substantially similar interests to eliminate redundant evidence, motions, objections, and briefs.

(6) Such other matters that may expedite the hearing or aid in the disposition of matters in dispute.

(c) The Presiding Officer will issue an order (which may be in the form of a transcript) reciting the actions taken at any pre-hearing conferences, setting the schedule for any hearing, and stating any areas of factual and legal agreement and disagreement and the methods and procedures to be used in developing any evidence.

40 CFR 78.14 Evidentiary hearing procedure.

(a) If a request for an evidentiary hearing is granted, the Presiding Officer will conduct a fair and impartial hearing on the record, take action to avoid unnecessary delay in the disposition of the proceedings, and maintain order. For theses purposes, the Presiding Officer may:

(1) Administer oaths and affirmations.

(2) Regulate the course of the hearings and prehearing conferences and govern the conduct of participants.

(3) Examine witnesses.

(4) Identify and refer issues for interlocutory decision under §78.19 of this part.

(5) Rule on, admit, exclude, or limit evidence.

(6) Establish the time for filing motions, testimony and other written evidence, and briefs and making other filings.

(7) Rule on motions and other pending procedural matters, including but not limited to motions for summary disposition in accordance with §78.15 of this part.

(8) Order that the hearing be conducted in stages whenever the number of parties is large or the issues are numerous and complex.

Copyright 1993-1997, The Bureau of National Affairs, Inc.

(9) Allow direct and cross-examination of witnesses only to the extent the Presiding Officer determines that such direct and cross-examination may be necessary to resolve disputed issues of material fact; *provided* that no direct or cross-examination shall be allowed on questions of law or policy or regarding matters that are not subject to challenge in the evidentiary hearing.

(10) Limit public access to the hearing where necessary to protect confidential business information. The Presiding Officer will provide written notice of the hearing to the parties, and where the hearing will be open to the public, notice in the FEDERAL REGISTER no later than 15 days prior to commencement of the hearing.

(11) Take any other action not inconsistent with the provisions of this part for the maintenance of order at the hearing and for the expeditious, fair and impartial conduct of the proceeding.

(b) All direct and rebuttal testimony at an evidentiary hearing shall be filed in written form, unless, upon motion and good cause shown, the Presiding Officer, in his or her discretion, determines that oral presentation of such evidence on any particular factual issue will materially assist in the efficient resolution of the issue.

(c) (1) The Presiding Officer will admit all evidence that is not irrelevant, immaterial, unduly repetitious, or otherwise unreliable or of little probative value. Evidence relating to settlement that would be excluded in the federal courts under Rule 408 of the Federal Rules of Evidence shall not be admissible.

(2) Whenever any evidence or testimony is excluded by the Presiding Officer as inadmissible, all such evidence will remain a part of the record as an offer of proof. The party seeking the admission of oral testimony may make an offer of proof by means of a brief statement on the record describing the testimony excluded.

(3) When two or more parties have substantially similar interests and positions, the Presiding Officer may limit the number of attorneys or authorized representatives who will be permitted to examine witnesses and to make and argue motions and objections on behalf of those parties.

(4) Rulings of the Presiding Officer on the admissibility of evidence or testimony, the propriety of direct and cross-examination, and other procedural matters will appear in the record of the hearing and control further proceedings unless reversed by the Presiding Officer or as a result of an interlocutory appeal taken under §78.19 of this part.

(5) All objections shall be made promptly or be deemed waived; *provided* that parties shall be presumed to have taken exception to an adverse ruling. No objection shall be deemed waived by further participation in the hearing.

40 CFR 78.15 Motions in evidentiary hearings.

(a) Any party may make a motion to the Presiding Officer on any matter relating to the

Copyright 1993-1997, The Bureau of National Affairs, Inc.

evidentiary hearing in accordance with the scheduling orders issued under §78.13 of this part. All motions shall be in writing and served as provided in §78.4 of this part, except those made on the record during an oral hearing before the Presiding Officer.

(b) Any party may make a motion for a summary disposition in its favor on any factual issue on the basis that there is no genuine issue of material fact. When a motion for summary disposition is made and supported, any party opposing the motion may not rest upon mere allegations or denials, but must show, by affidavit or by other materials subject to consideration by the Presiding Officer, that there is a genuine issue of material fact.

(c) Within 10 days after a motion made on the record or service of any written motion, any party may file a response to the motion. The time for response may be shortened or extended by the Presiding Officer for good cause shown.

(d) The Presiding Officer may schedule an oral argument and call for the filing of briefs on any motion. The Presiding Officer will rule on the motion within a reasonable time after the date that responses to the motion may be filed under paragraph (c) of this section and that any oral argument or filing of briefs is completed.

(e) If all factual issues are decided by summary disposition prior to the hearing, no hearing will be held and the Presiding Officer will issue a proposed decision under §78.18 of this part. If a summary disposition is denied or if partial summary disposition is granted, the hearing shall proceed on the remaining issues.

40 CFR 78.16 Record of appeal proceeding.

(a) The proposed decision issued by the Presiding Officer, transcripts of oral hearings or oral arguments, written direct and rebuttal testimony, and any other written materials of any kind filed in the proceeding will be part of the record and will be available to the public in the office of the Hearing Clerk, subject to the requirements of part 2 of this chapter .

(b) Hearings and oral arguments shall be recorded as specified by the Presiding Officer, and thereupon transcribed. After the hearing or oral argument, the reporter will certify and file with the Hearing Clerk.

(1) The original transcript; and

(2) Any exhibits received or offered into evidence at the hearing.

(c) The Hearing Clerk will promptly give written notice to the parties when any transcript is available. Any party that desires a copy of the transcript may obtain a copy upon payment of costs.

(d) The Presiding Officer will allow witnesses, parties, and their counsel or representatives:

(1) Up to 7 days from issuance of the notice under paragraph (c) of this section in order to file

Copyright 1993-1997, The Bureau of National Affairs, Inc.

written proposed corrections of the transcript necessary to correct errors made in the transcribing; and

(2) Up to 7 days from the submission of the corrections in order to file objections to the proposed corrections.

(e) The Presiding Officer will determine which, if any, corrections should be made to the transcript and incorporate them into the record.

40 CFR 78.17 Proposed findings and conclusions and supporting brief.

Within 45 days after issuance of a notice under §78.16(c) of this part that the complete transcript of the evidentiary hearing is available, any party may file with the Hearing Clerk proposed findings and conclusions on the issues referred to the Presiding Officer and a brief in support thereof. Briefs shall contain appropriate references to the record. The Presiding Officer, for good cause shown, may shorten or extend the time for filing and may allow reply briefs.

40 CFR 78.18 Proposed decision.

(a) The Presiding Officer will review and evaluate the record, including the proposed findings and conclusions and any briefs filed by the parties, and issue a proposed decision on the factual, policy, and legal issues referred by the Environmental Appeals Board for decision under §78.6(b)(2)(ii) of this part, accompanied by findings of fact and proposed conclusions of law, as appropriate, within a reasonable time after the evidentiary hearing is completed. The Hearing Clerk will promptly serve copies of the proposed decision on all parties and on the Environmental Appeals Board.

(b) The proposed decision of the Presiding Officer shall become the final agency action under section 307 of the Act 30 days after service unless within that time:

(1) A party files objections with the Environmental Appeals Board pursuant to §78.20(a) of t his part, or

(2) The Environmental Appeals Board *sua sponte* files a notice that it will review the decision under §78.20(b) of this part.

40 CFR 78.19 Interlocutory appeal.

(a) Interlocutory appeal from orders or rulings of the Presiding Officer made during the course of a proceeding may be taken if the Presiding Officer certifies those orders or rulings to the Environmental Appeals Board for interlocutory appeal on the record. Any requests to the Presiding Officer to certify an interlocutory appeal shall be filed within 10 days of notice of the order or ruling and shall state briefly the grounds for the request.

(b) (1) Within 15 days of the filing of any request for interlocutory appeal, the Presiding Officer may certify an order or ruling for interlocutory appeal to the Environmental Appeals Board if:

Copyright 1993-1997, The Bureau of National Affairs, Inc.

(i) The order or ruling involves an important question on which there is substantial ground for difference of opinion, and

(ii) Either:

(A) An immediate appeal of the order or ruling will materially advance the ultimate completion of the proceeding, or

(B) A review after the proceeding is completed will be inadequate or ineffective.

(2) If the Presiding Officer takes no action within 15 days of the filing of a request for interlocutory appeal, the request shall be automatically dismissed without prejudice.

(c) If the Presiding Officer grants certification, the Environmental Appeals Board may accept or decline the interlocutory appeal within 30 days of certification. If the Environmental Appeals Board decides that certification was improperly granted, it will decline to hear the interlocutory appeal. If the Environmental Appeals Board takes no action within 30 days of certification, the interlocutory appeal shall be automatically dismissed without prejudice.

(d) If the Presiding Officer declines to certify an order or ruling for an interlocutory appeal, the order or ruling may be reviewed by the Environmental Appeals Board only upon an appeal of the proposed decision following completion of the proceedings before the Presiding Officer, except when the Environmental Appeals Board determines, upon motion of a party and in exceptional circumstances, that to delay review would not be in the public interest. Such motion shall be filed with Environmental Appeals Board within 5 days after the earlier of automatic dismissal of the request for interlocutory appeal or receipt by the party of notification that the Presiding Officer declines to certify an order or ruling for interlocutory appeal.

(e) The failure of a party to request an interlocutory appeal shall not prevent an appeal of an order or ruling as part of an appeal of a proposed decision under §78.20 of this part.

40 CFR 78.20 Appeal of decision of Administrator or proposed decision to the Environmental Appeals Board.

(a) Within 30 days after the issuance of a proposed decision by a Presiding Officer under this part, any party may appeal any matter set forth in the proposed decision, or any other order or ruling made during the proceeding to which the party objected during the proceeding before the Presiding Officer, by filing an objection with the Environmental Appeals Board. On appeal of an order, ruling, or proposed decision of a Presiding Officer:

(1) The party filing the objection shall have the burden of going forward to show that the order, ruling, or proposed decision is based on a finding of fact or conclusion of law that is clearly erroneous; or a policy determination or exercise of discretion that is arbitrary and capricious or otherwise warrants review; and

Copyright 1993-1997, The Bureau of National Affairs, Inc.

(2) The petitioner or the owners and operators shall have the burden of persuasion, as set forth in §78.12(a)(1) and (2) of this part.

(b) Within 30 days after issuance of a proposed decision of a Presiding Officer, the Environmental Appeals Board may issue *sua sponte* in its discretion a notice of intent to review such proposed decision. The Environmental Appeals Board will serve such notice upon all parties to the proceeding.

(c) Within a reasonable time following the filing of a petition for administrative review of a decision of the Administrator under §78.3 of this part, or, if any issues raised by such petition are referred to the Presiding Officer, the filing of objections under paragraph (a) of this section or the issuance of a notice of intent to review under paragraph (b) of this section, the Environmental Appeals Board will issue an order affirming, reversing, modifying, or remanding the decision or proposed decision, as appropriate. Prior to issuing this order, the Environmental Appeals Board may provide an opportunity for parties to file additional briefs.

(d) If the Environmental Appeals Board issues an order affirming, reversing, or modifying the decision of the Administrator, then the decision as supplemented or changed by the order, shall be final agency action.

(e) If the Environmental Appeals Board issues an order affirming, reversing, or modifying the proposed decision, the proposed decision, as supplemented or changed by the order, shall be final agency action.

(f) If the Environmental Appeals Board issues an order remanding the proceeding, then final agency action occurs upon completion of the remanded proceeding, including any appeals to the Environmental Appeals Board in the remanded proceeding.

Copyright 1993-1997, The Bureau of National Affairs, Inc.

WEST VIRGINIA REGISTER

Published by Ken Hechler, Secretary of State

Volume XIV

Issue 25

June 19, 1997

Pages 959-996

A Weekly Publication

Administrative Law Division

Judy Cooper
Director

Lisa Blake
Leah Powell
Administrative Assistants

Secretary of State
Administrative Law Division
Bldg. 1, Suite 157K
1900 Kanawha Blvd. E.
Charleston, WV 25305-0770

(304)558-6000

CONTENTS

I. Chronological Index

II. Open Government Meetings Listing

III. Price List

IV. Rule Monitor

V. Notices

a. Legislative Rules

b. Interpretive Rules

c. Procedural Rules

d. Emergency Rules

e. Legislative Rule-Making Review Committee

VI. Legislative Interims

VII. Orders

IX. Ethics Commission Opinions

X. Attorney General Opinions

XI. Other Documents or Information Filed

XII. Publication Deadlines and Publication Dates

LEGISLATIVE

WEST VIRGINIA
SECRETARY OF STATE
KEN HECHLER
ADMINISTRATIVE LAW DIVISION

Do Not Mark In This Box

FILED

JUN 17 3 46 PM '97

OFFICE OF WEST VIRGINIA SECRETARY OF STATE

FORM #1

NOTICE OF PUBLIC HEARING ON A PROPOSED RULE

AGENCY: Division of Environmental Protection, Office of Air Quality TITLE NUMBER: 45

RULE TYPE: Legislative ; CITE AUTHORITY W.Va. Code §§22-5-1 et seq.

AMENDMENT TO AN EXISTING RULE: YES X NO ___

IF YES, SERIES NUMBER OF RULE BEING AMENDED: 33

TITLE OF RULE BEING AMENDED: "Acid Rain Provisions and Permits"

IF NO, SERIES NUMBER OF NEW RULE BEING PROPOSED: ___

TITLE OF RULE BEING PROPOSED: ___

DATE OF PUBLIC HEARING: July 21, 1997 TIME: 6:00 p.m.

LOCATION OF PUBLIC HEARING: Office of Air Quality
1558 Washington Street, East
Charleston, West Virginia 25311

COMMENTS LIMITED TO: ORAL ___, WRITTEN ___, BOTH X

COMMENTS MAY ALSO BE MAILED TO THE FOLLOWING ADDRESS: John H. Johnston, Chief
Office of Air Quality
1558 Washington Street, East
Charleston, WV 25311

The Department requests that persons wishing to make comments at the hearing make an effort to submit written comments in order to facilitate the review of these comments.

The issues to be heard shall be limited to the proposed rule.

ATTACH A BRIEF SUMMARY OF YOUR PROPOSAL

John H. Johnston
Authorized Signature

3.60 (w/out Fed. Reg's)
-11.10 (Fed. Reg's)

WEST VIRGINIA
SECRETARY OF STATE
KEN HECHLER
ADMINISTRATIVE LAW DIVISION

Do Not Mark In This Box

FILED

JUN 17 3 56 PM '97

OFFICE OF WEST VIRGINIA SECRETARY OF STATE

FORM #1

NOTICE OF PUBLIC HEARING ON A PROPOSED RULE

AGENCY: Division of Environmental Protection, Office of Air Quality TITLE NUMBER: 45

RULE TYPE: Legislative ; CITE AUTHORITY W.Va. Code §§22-5-1 et seq.

AMENDMENT TO AN EXISTING RULE: YES X NO ___

IF YES, SERIES NUMBER OF RULE BEING AMENDED: 34

TITLE OF RULE BEING AMENDED: "Emission Standards for Hazardous Air Pollutants Pursuant to 40 CFR Part 63"

IF NO, SERIES NUMBER OF NEW RULE BEING PROPOSED: ___

TITLE OF RULE BEING PROPOSED: ___

DATE OF PUBLIC HEARING: July 21, 1997 TIME: 6:00 p.m.

LOCATION OF PUBLIC HEARING: Office of Air Quality
1558 Washington Street, East
Charleston, West Virginia 25311

COMMENTS LIMITED TO: ORAL ___, WRITTEN ___, BOTH X

COMMENTS MAY ALSO BE MAILED TO THE FOLLOWING ADDRESS: John H. Johnston, Chief
Office of Air Quality
1558 Washington Street, East
Charleston, WV 25311

The Department requests that persons wishing to make comments at the hearing make an effort to submit written comments in order to facilitate the review of these comments.

The issues to be heard shall be limited to the proposed rule.

ATTACH A BRIEF SUMMARY OF YOUR PROPOSAL

John H. Johnston
Authorized Signature

985 $6.20 (w/out federal regs)
$50.90 (with federal regs)

DIVISION OF ENVIRONMENTAL PROTECTION

CECIL H. UNDERWOOD
GOVERNOR

1558 Washington Street East
Charleston, WV 25311-2599

JOHN E. CAFFREY
DIRECTOR

June 16, 1997

Ms. Robin Clark
Charleston Newspapers
Legal Ad Department
1001 Virginia Street, East
Charleston, WV 25301

Dear Ms. Clark:

Please publish the attached "Notice of Public Hearing and Public Comment Period" as soon as possible as a Class I legal advertisement. The publication must occur no later than Friday, June 20, 1997 and must not be published on Sunday as a matter of law. If you have any questions regarding this matter, please contact Tammy Mowrer at 558-2275.

You may submit your invoice and a tear sheet to the attention of Ms. Nadine Sitton, 1558 Washington Street, East, Charleston, West Virginia 25311.

Sincerely yours,

John H. Johnston
tlm

John H. Johnston
Chief, Office of Air Quality

JHJ/tlm

Enclosure

Office of Air Quality
Phone: (304) 558-4022 Fax: (304) 558-3287

NOTICE OF PUBLIC HEARING AND
PUBLIC COMMENT PERIOD

On Monday, July 21, 1997 beginning at 6:00 p.m., the West Virginia Division of Environmental Protection, Office of Air Quality will hold a public hearing on proposed revisions to the following legislative rules:

45CSR23 "To Prevent and Control Emissions from Municipal Waste Solid Landfills"

45CSR25 "To Prevent and Control Air Pollution From Hazardous Waste Treatment, Storage, or Disposal Facilities"

45CSR33 "Acid Rain Provisions and Permits"

45CSR34 "Emission Standards for Hazardous Air Pollutants Pursuant to 40 CFR Part 63"

Upon authorization and promulgation of revisions to 45CSR33 and 45CSR34, the Office of Air Quality will seek federal delegation of authority from the U. S. Environmental Protection Agency to implement and enforce the revised standards.

Upon authorization and promulgation of revisions to 45CSR23 and 45CSR25, the rule will be submitted to the U. S. Environmental Protection Agency as part of the State Hazardous Waste Management Program.

The hearing will be held in the Office of Air Quality's Conference Room located at 1558 Washington Street East, Charleston, West Virginia. The hearing is open to the public. Written and oral comments by the public will be accepted during the hearing on July 21st and will be made a part of the rulemaking record. The public may also submit written comments by mail or other delivery to the Office of Air Quality through July 21st for inclusion in the rulemaking record at the following address:

John Johnston, Chief
Office of Air Quality
1558 Washington Street East
Charleston, WV 25311-2599

Copies of the proposed legislative rules will be available for public review on or before June 19, 1997 at the Office of Air Quality's Charleston office. The proposed legislative rules will also be available for public review on or before June 19, 1997 at the Office of Air Quality's regional offices located at 109 Adams Street, Room M-2, Fairmont; 1911 Warwood Avenue, Wheeling; and New Creek, WV.

CHARLESTON NEWSPAPERS
P.O. Box 2993
Charleston, West Virginia 25330
Billing 348-4898
Classified 348-4848
1-800-WVA-NEWS
FEIN 55-0676079

INVOICE DATE	06/20/97
ACCOUNT NBR	037143002
SALES REP ID	0016
INVOICE NBR	437654001

Legal pricing is based upon 67 words per column inch at a rate of $.0925 per word.
Each successive insertion is discounted by 25% of the first insertion rate ($.069375 per word)

ISSUE DATE	AD TYPE	PUB	DESCRIPTION / REFERENCE NBR PURCHASE ORDER #	AD NUMBER	AD SIZE / TOTAL RUN	RATE	GROSS AMOUNT	NET AMOUNT
06/19	LEGF	GZ	PUBLIC HEARING 437654001	L371373	1X0738 7.38	6.19	45.69	
06/19	LEGF	DM	PUBLIC HEARING 437654001	L371373	1X0738 7.38	6.19	45.69	91.38
			TOTAL INVOICE AMOUNT					91.38

State of West Virginia.

AFFIDAVIT OF PUBLICATION

I, Sandra Legg of
THE CHARLESTON GAZETTE, A DAILY DEMOCRATIC NEWSPAPER,
THE DAILY MAIL, A DAILY REPUBLICAN NEWSPAPER,
published in the city of Charleston, Kanawha County, West Virginia, do solemnly swear that the annexed notice of:
PUBLIC HEARING
was duly published in said paper(s) during the dates listed below, and was posted at the front door of the court house of said Kanawha County West Virginia, on the 20TH day of JUNE 1997. Published during the following dates: 06/19/97-06/19/97
Subscribed and sworn to before me this 23 day of June
Printers fee $ 91.38

Notary Public of Kanawha County, West Virginia

NOTICE OF HEARING AND PUBLIC COMMENT PERIOD

On Monday, July 21, 1997 beginning at 6:00 p.m., the West Virginia Division of Environmental Protection, Office of Air Quality will hold a public hearing on proposed revisions to the following legislative rules:

45CSR23 "To Prevent and Control Emissions from Municipal Waste Solid Landfills"

45CSR25 "To Prevent and Control Air Pollution From Hazardous Waste Treatment, Storage, or Disposal Facilities"

45CSR33 "Acid Rain Provisions and Permits"

45CSR34 "Emission Standards for Hazardous Air Pollutants Pursuant to 40 CFR Part 63"

Upon authorization and promulgation of revisions to 45CSR33 and 45CSR34, the Office of Air Quality will seek federal delegation of authority from the U.S. Environmental Protection Agency to implement and enforce the revised standards.

Upon authorization and promulgation of revisions to 45CSR23 and 45CSR25, the rule will be submitted to the U.S. Environmental Protection Agency as part of the State Hazardous Waste Management Program.

The hearing will be held in the Office of the Air Quality's Conference Room located at 1558 Washington Street East, Charleston, West Virginia. The hearing is open to the public. Written and oral comments by the public will be accepted during the hearing on July 21st and will be made a part of the rulemaking record. The public may also submit written comments by mail or other delivery to the Office of Air Quality through July 21st for inclusion in the rulemaking record at the following address:

John Johnston
Office of Air Quality
1558 Washington Street, E.
Charleston, WV 25311-2599

Copies of the proposed legislative rules will be available for public review on or before June 19, 1997 at the Office of Air Quality's Charleston office. the proposed legislative rules will also be available for public review on or before June 19, 1997 at the Office of Air Quality's regional offices located at 109 Adams Street, Room M-2, Fairmont; Warwood Avenue, Wheeling; and New Creek, WV.

(371373)

The items listed hereon conform to specification, were received and are approved for payment.
Date 06-23-97 Signed: N. Ditton

GRANT #:		PROJECT #:	SWC NAME:
			SCO #:
CLASS # 4	Vendor # 550-676-079		Off Appr Date
PO#:			
OR#:	VENDOR #: 50937		

FIMS FUND	[illegible]	FIMS ORG	FIMS ACT	FIMS OBJ CODE	OFF/FC/PC
3336	1097	9310	099	035	5-537-508

DEP

Division of **E**nvironmental **P**rotection
Sign-In

Hearing on 45 CSR 23, 45 CSR 25, 45 CSR 33, & 45 CSR 34

July 21, 1997

Name *(please print)*	Address
1. JOHN JOHNSTON	WVDEP - OAQ
2. STEPHEN L. CARPENTER	" "
3. Karen Watson	" "
4. Lucy Pontiveros	" "
5.	
6.	
7.	
8.	
9.	
10.	
11.	
12.	
13.	
14.	
15.	
16.	
17.	
18.	
19.	

BEFORE THE WEST VIRGINIA DIVISION OF
ENVIRONMENTAL PROTECTION
OFFICE OF AIR QUALITY

ORIGINAL

In the matter of:

PUBLIC HEARING ON PROPOSED LEGISLATIVE RULE

45 CSR 33 "Acid Rain Provisions and Permits"

Transcript of proceedings had at a public hearing in the above-styled matter taken by Paula J. Moore, Certified Court Reporter and Notary Public, at the West Virginia Division of Environmental Protection, Office of Air Quality, Conference Room, 1558 Washington Street, East, Charleston, West Virginia, 25305, commencing at 6:07 p.m. and concluding at 6:11 p.m., the 21st day of July 1997, pursuant to notice.

FORM CSR - LASER REPORTERS PAPER & MFG. CO. 800-628-6313

1 **P R O C E E D I N G S**

2 MS. CHANDLER: This public hearing will
3 now come to order on this 21st day of July, 1997, in the
4 conference room of the West Virginia Division of
5 Environmental Protection, Office of Air Quality, located
6 at 1558 Washington Street, East, Charleston, West
7 Virginia.

8 The purpose of the public hearing is to
9 hear discussions on the proposed rules filed in the
10 Secretary of State's Office on June 17, 1997 and noticed
11 in the State Register on June 19, 1997. The legislative
12 rules are 45 CSR 23, 45 CSR 25, 45 CSR 33 and 45 CSR 34.
13 The rules were noticed in a Class I legal advertisement in
14 both the Charleston Daily Mail and Charleston Gazette, and
15 notice was also sent to various individuals and
16 organizations. This public hearing is being held pursuant
17 to the provisions of 29A of the West Virginia Code and
18 Section 110 of the Clean Air Act.

19 By way of introduction, my name is Jeanne
20 Chandler of the Public Information Office of the West
21 Virginia Division of Environmental Protection. I will be
22 the moderator for these proceedings.

23 In order to obtain separate transcripts

FORM CSR - LASER REPORTERS PAPER & MFG. CO. 800-626-6313

1 for each of the rules, the hearing procedure this evening
2 will be to introduce each rule individually, allow time
3 for oral comments and close the hearing for that
4 particular rule. Written comments for any rule may be
5 submitted at the end of the public hearing tonight.
6 For those of you wishing to make formal
7 comments, a sign-up sheet was provided on the counter at
8 the front desk. Please sign up now if you have not
9 already done so. I remind you that the comment period
10 will end at the close of the public hearing.
11 The court reporter is Paula J. Moore,
12 Q & A Court Reporters, Incorporated. If anyone desires a
13 transcript of these proceedings, please contact Ms. Moore
14 at 937-2555.
15 The purpose of the public hearing is to
16 hear discussions on proposed rule 45 CSR 33, "Acid Rain
17 Provisions and Permits." Title IV of the federal Clean
18 Air Act, as amended November 15, 1990, required each state
19 to implement an operating permit system conforming to
20 Title IV and Title V of the Clean Air Act, as amended.
21 West Virginia complied by enacting Rule 45
22 CSR 33, "Acid Rain Provisions and Permits," which is an
23 incorporation by reference of the federal counterpart

FORM CSR - LASER REPORTERS PAPER & MFG. CO. 800-626-6313

1 Regulation 40 CFR Part 72 and became effective May 1,
2 1994. The United States Environmental Protection Agency
3 approved West Virginia's Acid Rain Program with its
4 approval of West Virginia's Title V Operating Permit
5 Program effective December 15, 1995. 45 CSR 33 was
6 amended in the 1996 Legislative Session to include all
7 revisions and additions promulgated under 40 CFR Part 72
8 and related parts between June 1994 and June 1995.
9 The intent of the revisions contained
10 herein is to update 45 CSR 33 by incorporating all
11 revisions and additions promulgated between June 1, 1995
12 and June 1, 1997 under the federal counterpart Regulation
13 40 CFR Part 72 and related parts. These revisions also
14 contain language changes that make clear and certain which
15 of the CFR parts of the Acid Rain Program of the federal
16 regulations are included in the incorporation.
17 Those to be incorporated are: (1) 40 CFR
18 Part 72, "Permits Regulations"; (2) 40 CFR Part 74,
19 "Sulfur Dioxide Opt-Ins"; (3) 40 CFR Part 75, "Continuous
20 Emissions Monitoring"; (4) 40 CFR Part 76, "Nitrogen
21 Oxides Reduction Program"; (5) 40 CFR Part 77, "Excess
22 Emissions."
23 Under the Acid Rain Program promulgated by

FORM CSR - LASER REPORTERS PAPER & MFG. CO. 800-626-6313

1 the United States Environmental Protection Agency pursuant
2 to Title IV of the Clean Air Act, as amended, no person
3 may construct, modify or operate or cause to be
4 constructed, modified or operated an Acid Rain source in
5 violation of 40 CFR Part 72. The Legislature has
6 previously promulgated 45 CSR 33 pursuant to Title IV by
7 incorporation by reference portion of the Federal
8 counterpart regulations.
9 The purpose of this rule amendment is to
10 update 45 CSR 33 to be consistent with all rules
11 promulgated under pertinent federal counterpart rules
12 under the Clean Air Act, as amended. This rule amendments
13 will also provide clarity in the exact federal
14 counterparts adopted by the West Virginia rule.
15 Upon authorization and promulgation of
16 revisions to 45 CSR 33, the Office of Air Quality will
17 seek federal delegation of authority from the U. S.
18 Environmental Protection Agency to implement and enforce
19 the revised standards.
20 The floor is now open for public comment.
21 Please identify yourself and affiliation, if any, prior to
22 making comment.
23 (No public comment.)

FORM CSR - LASER REPORTERS PAPER & MFG. CO. 800-626-6313

1 There being nothing further, this public
2 meeting for 45 CSR 33 is concluded.
3 (WHEREUPON, the public hearing
4 was concluded at 6:11 p.m.)

FORM CSR - LASER REPORTERS PAPER & MFG. CO. 800-626-6313

BEFORE THE WEST VIRGINIA DIVISION OF
ENVIRONMENTAL PROTECTION
OFFICE OF AIR QUALITY

STATE OF WEST VIRGINIA,

COUNTY OF PUTNAM, to-wit:

I, the undersigned, Paula, J. Moore, a Certified Court Reporter and Notary Public within and for the State of West Virginia, duly commissioned and qualified, do hereby certify that the foregoing is, to the best of my skill and ability, a true and accurate transcript of all the proceedings had in the aforementioned matter.

Given under my hand and official seal this 24th day of July 1997.

Paula J. Moore

Certified Court Reporter
Notary Public

OFFICIAL SEAL
NOTARY PUBLIC
STATE OF WEST VIRGINIA
PAULA J. MOORE
223 NASH LANE
BUFFALO, WV 25033
My Commission Expires November 12, 2006

My commission expires November 12, 2006.

FORM CSR - LASER REPORTERS PAPER & MFG. CO. 800-626-6313