WEST VIRGINIA REGISTER

Published by the Office of the Secretary of State

Volume XXXVIII

Issue 15

April 16, 2021

A Weekly Publication

Administrative Law Division

Mac Warner
Secretary of State
Bldg. 1, Suite 157K
1900 Kanawha Blvd. East
Charleston, WV 25305-0770

(304) 558-6000

sos.wv.gov

CONTENTS

Chronological Index

Rule Monitor

Notices

a. **Legislative Rules**
b. **Interpretive Rules**
c. **Procedural Rules**
d. **Emergency Rules**
e. **LRMRC and LOCEA**

Legislative Interims

Orders

Ethics Commission Opinions

Grievances Reports

Office of Tax Appeal Decisions

Governor's Executive Orders

Attorney General Opinions

Other Documents or Information Filed

This week's publication includes documents submitted by the following agencies:

Agriculture

Auditor

Dentistry

Education

Environmental Protection, Secretary's Office

Fire Commission

Health Care Authority

Highways, Div. of

Insurance Commission

Livestock Care Standards Board

Medicine, WV Board of

Natural Resources

Osteopathic Medicine

Public Service Commission

Real Estate Commission, WV

Senior Services

Tax

Transportation, Dept. of

CHRONOLOGICAL INDEX, VOLUME XXXVIII ISSUE 15

NEW RULES FILED FOR PUBLIC COMMENT THIS WEEK

AGENCY	RULE/TYPE	AUTHORITY	HEARING/COMMENT PERIOD/LOCATION
Education 126-030	Transformative System of Support for Early Literacy (Policy 2512) Legislative Exempt	§§29A-3B-1, et seq.	Written Comments Only May 17, 2021, 4:00 pm Dr. Monica DellaMea, Director Early and Elementary Learning Services Capitol Bldg. 6, Room 215 1900 Kanawha Blvd. East Charleston, WV 25305 mdellamea@k12.wv.us
Education 126-069	Regulations for Juvenile Diversion and Transition Programs (Policy 2800) Legislative Exempt	§§29A-3B-1, et seq.	Written Comments Only May 17, 2021, 4:00 pm Jacob Green, Superintendent WV Schools of Diversion and Transition Capitol Bldg. 6, Room 825 1900 Kanawha Blvd. East Charleston, WV 25305 jgreen@k12.wv.us
Fire Commission 87-10	Volunteer Fire Department Equipment and Training Grant Funding Disbursement Legislative	§15A-11-11	Written Comments Only May 31, 2021, 4:00 pm Ken Tyree 1207 Quarrier Street Charleston, WV 25301 Kenneth.e.tyree@wv.gov

NO NEW EMERGENCY RULES FILED THIS WEEK

AGENCY	RULE/TYPE	AUTHORITY	EFFECTIVE DATE	DATE NOTICE OF HEARING

Office of the Secretary of State
State Capitol
Charleston, West Virginia 25305

Mac Warner
Secretary of State
State of West Virginia

Telephone: (304) 558-6000
Toll Free: 1-866-SOS-VOTE
Fax: (304) 558-0900
www.wvsos.gov

GUIDE FOR USING THE RULE MONITOR IN THE STATE REGISTER

Column	1.	Agency Name, (Title and Series Number)
Column	2.	Rule Title, Price and Type
Column	3.	Date Notice of Public Hearing or Comment Period Filed
Column	4.	Date of Public Hearing or Last Date Comments Will Be Received
Column	5.	Date Emergency Rule Filed, Emergency Amendments Filed, Emergency Rule Decision (ERD) Number & Date ERD Filed (Effective Date of Emergency Rule)
Column	6.	Date Agency Approved Legislative Rules Filed.
Column	7.	Date Review by the Legislative Rule-Making Review Committee & Action Taken **Please Note** The Board of Education, Board of Trustees & Board of Directors File Their Rules With the Educational Over-Sight Committee
Column	8.	Legislative Action
Column	9.	Date Agency Final Files Legislative, Procedural or Interpretive Rules. This is the Final Step for Procedural & Interpretive Rules
Column	10.	Date Rule is Effective

- Emergency rules will not have a "Notice" date until the agency files one, but the rule will appear in Columns 1, 2 & 5. An Agency must file for either a public hearing or public comment period either before filing as an emergency or no more than 30 days after filing the rule as an emergency
- If more than one date appears in a column, it means the agency has repeated that step (ex. - holding an additional public hearing)

CROSS REFERENCE OF RULE MONITOR TITLE NUMBERS AND AGENCIES

TITLE NUMBER		NAME OF AGENCY
TITLE	1	ACCOUNTANCY
TITLE	2	ARCHITECTS
TITLE	3	BARBERS AND COSMETOLOGISTS
TITLE	4	CHIROPRACTIC EXAMINERS
TITLE	5	DENTISTRY
TITLE	6	FUNERAL SERVICE EXAMINERS
TITLE	7	PROFESSIONAL ENGINEERS
TITLE	10	LICENSED PRACTICAL NURSES
TITLE	11	MEDICINE
TITLE	14	OPTOMETRY
TITLE	15	PHARMACY
TITLE	16	PHYSICAL THERAPY
TITLE	17	PSYCHOLOGISTS
TITLE	19	REGISTERED PROFESSIONAL NURSES
TITLE	20	SANITARIANS
TITLE	22	FORESTRY
TITLE	24	OSTEOPATHIC MEDICINE
TITLE	25	SOCIAL WORK EXAMINERS
TITLE	26	VETERINARY MEDICINE
TITLE	27	COUNSELING
TITLE	29	SPEECH-LANGUAGE PATHOLOGY AND AUDIOLOGY
TITLE	30	RESPIRATORY CARE
TITLE	31	DIETITIANS
TITLE	32	ACUPUNCTURE
TITLE	33	WASTE MANAGEMENT, DIV. OF WATER AND WASTE MGMT.
TITLE	35	OIL AND GAS
TITLE	36	COAL MINE HEALTH AND SAFETY
TITLE	38	MINING AND RECLAMATION
TITLE	42	LABOR
TITLE	45	AIR QUALITY
TITLE	47	WATER RESOURCES, DIV. OF WATER AND WASTE MGMT.
TITLE	56	MINERS' HEALTH, SAFETY AND TRAINING
TITLE	58	NATURAL RESOURCES
TITLE	60	ENVIRONMENTAL PROTECTION – SECRETARY'S OFFICE
TITLE	61	AGRICULTURE
TITLE	64	HEALTH
TITLE	65	HEALTH CARE AUTHORITY
TITLE	69	HEALTH AND HUMAN RESOURCES
TITLE	76	SENIOR SERVICES
TITLE	78	HUMAN SERVICES
TITLE	81	STATE POLICE
TITLE	87	FIRE COMMISSION
TITLE	89	PUBLIC DEFENDER SERVICES
TITLE	90	CORRECTIONS
TITLE	91	MOTOR VEHICLES
TITLE	94	REGIONAL JAIL AND CORRECTIONAL FACILITY AUTHORITY
TITLE	110	TAX DEPARTMENT
TITLE	112	TREASURER
TITLE	114	INSURANCE COMMISSION
TITLE	126	EDUCATION
TITLE	127	SECONDARY SCHOOLS ACTIVITIES COMMISSION
TITLE	133	HIGHER EDUCATION POLICY COMMISSION
TITLE	135	COMMUNITY AND TECHNICAL COLLEGE EDUCATION
TITLE	143	PERSONNEL
TITLE	144	TOURISM
TITLE	145	DEVELOPMENT OFFICE
TITLE	146	STATE ELECTION COMMISSION
TITLE	148	ADMINISTRATION
TITLE	149	CRIME, DELINQUENCY AND CORRECTIONS
TITLE	150	PUBLIC SERVICE COMMISSION
TITLE	153	SECRETARY OF STATE
TITLE	155	AUDITOR
TITLE	157	HIGWAYS
TITLE	164	SCHOOL BUILDING AUTHORITY
TITLE	174	REAL ESTATE COMMISSION
TITLE	175	ALCOHOL BEVERAGE CONTROL COMMISSION
TITLE	176	ALCOHOL BEVERAGE CONTROL COMMISSION - BEER
TITLE	177	ATHLETIC COMMISSION
TITLE	178	RACING COMMISSION
TITLE	179	LOTTERY COMMISSION
TITLE	190	REAL ESTATE APPRAISER LICENSING & CERTIFICATION BOARD

RULE MONITOR

AGENCY/SERIES NUMBER	RULE	NOTICE	HEARING	EMER RULE	AGENCY APPROVED	LRMRC/LOCEA ACTION	LEGIS	FINAL FILE	EFFECTIVE
Administration (148-01)	Purchasing Legislative	7/7/2020	8/6/2020		8/10/2020	Modified w/Certain Amendments & Approved 12/9/2020	Bundled SB126		
Agriculture (61-01)	Animal Disease Control Legislative	7/28/2020	8/27/2020		8/27/2020	Approved 12/9/2020	Bundled SB182	4/13/2021	5/3/2021
Agriculture (61-09)	WV Seed Law Legislative	7/28/2020	8/27/2020		8/27/2020	Modified & Approved 12/9/2020 Filed 12/23/2020	Bundled SB182	4/13/2021	5/3/2021
Agriculture (61-16)	Inspection of Meat and Poultry Legislative	7/14/2020	8/13/2020		8/17/2020	Approved 12/9/2020	Bundled SB182	4/13/2021	5/3/2021
Agriculture (61-28)	Poultry Litter and Manure Movement Into Primary Poultry Breeder Rearing Areas Legislative				Sunset Extension 7/27/2020	Approved 12/9/2020	Bundled SB182	4/13/2021	5/3/2021
Agriculture (61-39)	Seed Certification Program Legislative	7/27/2020	8/26/2020		8/26/2020	Modified & Approved 12/9/2020 Filed 12/22/2020	Bundled SB182	4/13/2021	5/3/2021
Agriculture (61-40)	WV Exempted Dairy Farms and Milk and Milk Products Processing Rule Legislative	8/21/2020	9/20/2020		9/21/2020	Approved 12/9/2020	Bundled SB182	4/13/2021	5/3/2021
Air Quality (45-08)	Ambient Air Quality Standards Legislative	6/24/2020	7/28/2020		8/26/2020	Approved 9/25/2020	Bundled HB2382		
Air Quality (45-16)	Standards of Performance for New Stationary Sources Legislative	6/24/2020	7/28/2020		8/26/2020	Approved 9/25/2020	Bundled HB2382		
Air Quality (45-18)	Control of Air Pollution from Combustion of Solid Waste Legislative	6/24/2020	7/28/2020		8/26/2020	Approved 9/25/2020	Bundled HB2382		
Air Quality (45-23)	Control of Air Pollution from Municipal Solid Waste Landfills Legislative	6/24/2020	7/28/2020		8/26/2020	Approved 9/25/2020	Bundled HB2382		
Air Quality (45-33)	Acid Rain Provisions and Permits Legislative	6/24/2020	7/28/2020		8/26/2020	Approved 9/25/2020	Bundled HB2382		
Air Quality (45-34)	Emission Standards for Hazardous Air Pollutants Legislative	6/24/2020	7/28/2020		8/26/2020	Approved 9/25/2020	Bundled HB2382		

RULE MONITOR

AGENCY/SERIES NUMBER	RULE	NOTICE	HEARING	EMER RULE	AGENCY APPROVED	LRMRC/LOCEA ACTION	LEGIS	FINAL FILE	EFFECTIVE
Air Quality (45-44)	Control of Greenhouse Gas Emissions from Existing Coal-Fired Electric Utility Generating Units Legislative	6/24/2020	7/28/2020		8/26/2020	Modified & Approved 9/25/2020 Filed 9/28/2020	Bundled HB2382		
Auditor (155-01)	Standards for Requisitions for Payment Issued by State Officers on the Auditor Legislative	7/13/2020	8/13/2020		8/17/2020	Modified & Approved 11/16/2020 Filed 11/19/2020	Bundled SB182	4/13/2021	5/15/2021
Education (126-007)	Regulations for Adult Diversion and Transition Programs (Policy 1471) Legislative Exempt	2/10/2021	3/15/2021					4/15/2021	7/1/2021
Education (126-008)	Drug-Free Workplace (Policy 1461) Legislative Exempt	2/10/2021	3/15/2021					4/15/2021	5/17/2021
Education (126-025A)	Standards for Basic and Specialized Health Care Procedures (Policy 2422.7) Legislative Exempt	3/11/2021	4/12/2021						
Education (126-030)	Transformative System of Support for Early Literacy (Policy 2512) Legislative Exempt	4/15/2021	5/17/2021						
Education (126-069)	Regulations for Juvenile Diversion and Transition Programs (Policy 2800) Legislative Exempt	4/15/2021	5/17/2021						
Education (126-084)	Student Driver Eligibility Certificate (Policy 4150) Legislative Exempt	3/11/2021	4/12/2021						
Education (126-143)	County Superintendent Performance Evaluations (Policy 5309) Legislative Exempt	3/11/2021	4/12/2021						
Emergency Management (170-04)	SIRN Emergency Purchasing Procedure Procedural	1/29/2021	3/1/2021						
Emergency Management (170-05)	Purchases During States of Emergency Procedural	1/29/2021	3/1/2021						

RULE MONITOR

AGENCY/SERIES NUMBER	RULE	NOTICE	HEARING	EMER RULE	AGENCY APPROVED	LRMRC/LOCEA ACTION	LEGIS	FINAL FILE	EFFECTIVE
Environmental Protection – Secretary's Office (60-03)	Voluntary Remediation and Redevelopment Rule Legislative	7/2/2020	8/11/2020		8/25/2020	Modified & Approved 12/9/2020 Filed 12/11/2020	Bundled HB2382	4/9/2021	6/1/2021
Ethics Commission (158-06)	Use of Office for Private Gain, Including Nepotism Legislative	3/22/2021	4/22/2021						
Financial Institutions, Div. of (106-21)	Rule Pertaining to the Fintech Regulatory Sandbox Legislative	6/26/2020	7/31/2020	6/26/2020 Approved 7/1/2020 Amendment 11/30/2020 Approved 12/16/2020	8/13/2020	Modified & Approved 11/17/2020 Filed 11/30/2020	Bundled SB160	4/5/2021	5/1/2021
Fire Commission (87-07)	Standards for the Certification and Continuing Education of Municipal, County, and Other Public Sector Building Code (Repeal) Legislative	6/22/2020	7/22/2020		8/24/2020	Approved 11/16/2020	Bundled SB156		
Fire Commission (87-10)	Volunteer Fire Department Equipment and Training Grant Funding Disbursement Legislative	4/12/2021	5/31/2021	3/30/2021 ERD by 5/11/2021					
Fire Marshal (103-06)	Standards for the Certification and Continuing Education of Municipal, County, and Other Public Sector Building Code Legislative	6/22/2020	7/22/2020		8/13/2020	Approved 11/16/2020	Bundled SB156		
Health (64-11)	Behavioral Health Centers Licensure Legislative	7/1/2020	7/31/2020		8/25/2020	Modified & Approved 12/9/2020 Filed 1/4/2021	Bundled HB2427		
Health (64-12)	Hospital Licensure Legislative	7/1/2020	7/31/2020		8/21/2020	Approved 12/9/2020	Bundled HB2427		
Health (64-13)	Nursing Home Licensure Legislative	7/1/2020	7/31/2020		8/25/2020	Modified & Approved 12/9/2020 Filed 12/16/2020	Bundled HB2427		

RULE MONITOR

AGENCY/SERIES NUMBER	RULE	NOTICE	HEARING	EMER RULE	AGENCY APPROVED	LRMRC/LOCEA ACTION	LEGIS	FINAL FILE	EFFECTIVE
Health (64-45)	Lead Abatement Licensing Legislative	7/2/2020	8/3/2020		8/21/2020	Modified & Approved 11/17/2020 Filed 12/10/2020	Bundled HB2427		
Health (64-48)	Emergency Medical Services Legislative	9/4/2020	10/5/2020	9/4/2020 Approved 9/30/2020 Amendment 10/1/2020 Approved 10/1/2020 Amendment 1/13/2021 Approved 1/13/2021	11/20/2020	Modified & Approved 12/9/2020 Filed 1/4/2021	Bundled HB2427		
Health (64-59)	Patient Rights at State-Operated Mental Health Facilities Legislative	7/1/2020	7/31/2020		8/26/2020	Modified & Approved 12/9/2020 Filed 12/9/2020	Bundled HB2427		
Health (64-60)	Delegation of Medication Administration and Health Maintenance Tasks to Approved Medication Assistive Personnel Legislative	7/1/2020	7/31/2020		8/21/2020	Modified & Approved 12/9/2020 Filed 12/16/2020	Bundled HB2427		
Health (64-115)	Diabetes Self-Management Education Legislative	7/2/2020	8/3/2020		8/26/2020	Modified & Approved 11/17/2020 Filed 11/20/2020	Bundled HB2427		
Health and Human Resources (69-10)	WV Clearance for Access: Registry and Employment Screening Legislative	7/1/2020	7/31/2020		8/21/2020	Modified & Approved 11/17/2020 Filed 11/20/2020	Bundled HB2427		
Health and Human Resources (69-15)	Recovery Residence Certification and Accreditation Program Legislative	5/8/2020	6/8/2020	4/29/2020 Effective 6/10/2020	7/1/2020	Modified & Approved 12/9/2020 Filed 12/9/2020	Bundled HB2427		
Health and Human Resources (69-16)	Purchasing Procedures Procedural	3/15/2021	4/14/2021						

RULE MONITOR

AGENCY/SERIES NUMBER	RULE	NOTICE	HEARING	EMER RULE	AGENCY APPROVED	LRMRC/LOCEA ACTION	LEGIS	FINAL FILE	EFFECTIVE
Health Care Authority (65-29)	Exemption from Certificate of Need Legislative	8/24/2020	9/23/2020		9/28/2020	Approved 12/9/2020	Bundled HB2427		
Hearing Aid Dealers (8-01)	Rule Governing the WV Bd. Of Hearing Aid Dealers Legislative	7/21/2020	8/22/2020		8/28/2020	Modified & Approved 11/16/2020 Filed 12/1/2020	Bundled SB182		
Higher Education Policy Comm. (133-63)	Mental Health Loan Repayment Program Legislative	6/26/2020	7/27/2020	6/26/2020 Effective 6/26/2020	7/29/2020	Approved 3/12/2021	HB3299		
Higher Education Policy Comm. (133-64)	Administrative Exemption Legislative	11/20/2020	12/21/2020		3/11/2021	Modified & Approved 3/12/2021	HB3299		
Highways (157-05)	Traffic and Safety Rules Legislative	7/28/2020	8/28/2020		8/28/2020	Approved 11/17/2020	Bundled HB2400		
Highways (157-14)	Contract Administration Purchasing Process Procedural	12/14/2020	1/14/2021					4/6/2021	5/6/2021
Human Services (78-02)	Child Placing Agencies Licensure Legislative	7/1/2020	7/31/2020		8/25/2020	Modified & Approved 12/9/2020 Filed 12/16/2020	Bundled HB2427		
Human Services (78-03)	Minimum Licensing Requirements for Residential Child Care and Treatment Facilities for Children and Transitioning Adults and Vulnerable and Transitioning Youth Group Homes and Programs in WV Legislative	7/1/2020	7/31/2020		8/25/2020	Modified & Approved 12/9/2020 Filed 12/15/2020	Bundled HB2427		
Human Services (78-27)	Procedure to Contest the Substantiation of Child Abuse or Neglect Legislative	7/1/2020	7/31/2020		8/26/2020	Modified & Approved 12/9/2020 Filed 12/15/2020	Bundled HB2427		
Insurance Comm. (114-02A)	Fingerprinting Requirements for Applicants for Insurance Producer License and Insurance Adjuster License Legislative	6/18/2020	7/24/2020		7/27/2020	Modified & Approved 9/25/2020 Filed 9/30/2020	Bundled SB160	4/12/2021	7/1/2021

RULE MONITOR

AGENCY/SERIES NUMBER	RULE	NOTICE	HEARING	EMER RULE	AGENCY APPROVED	LRMRC/LOCEA ACTION	LEGIS	FINAL FILE	EFFECTIVE
Insurance Comm. (114-25)	Insurance Adjusters Legislative	6/18/2020	7/24/2020		7/27/2020	Modified & Approved 9/25/2020 Filed 9/30/2020	Bundled SB160	4/12/2021	7/1/2021
Insurance Comm. (114-40)	Credit for Reinsurance Legislative	6/18/2020	7/24/2020		7/27/2020	Modified & Approved 9/25/2020 Filed 9/30/2020	Bundled SB160	4/12/2021	7/1/2021
Insurance Comm. (114-42)	Continuing Education for Individual Insurance Producers and Individual Insurance Adjusters Legislative	6/18/2020	7/24/2020		7/27/2020	Approved 9/25/2020	Bundled SB160	4/12/2021	7/1/2021
Insurance Comm. (114-64)	Mental Health Parity Legislative	6/22/2020	7/24/2020		8/11/2020	Modified & Approved 9/25/2020 Filed 9/30/2020	Bundled SB160	4/14/2021	5/1/2021
Labor (42-03)	Steam Boiler Inspection Legislative	7/16/2020	8/17/2020		8/24/2020	Modified w/Certain Amendments & Approved 12/9/2020	Bundled SB216		
Landscape Architects (9-01)	Registration of Landscape Architects Legislative	7/23/2020	8/24/2020		8/27/2020	Modified & Approved 11/16/2020 Filed 12/1/2020	Bundled SB182		
Landscape Architects (9-04)	Application for Waiver of Initial Licensing Fees for Certain Individuals Legislative	7/23/2020	8/24/2020		8/26/2020	Modified & Approved 11/16/2020 Filed 12/23/2020	Bundled SB182		
Livestock Care Standards Bd. (73-01)	Livestock Care Standards Legislative	7/21/2020	8/20/2020		8/21/2020	Approved 12/9/2020	Bundled SB182	4/13/2021	5/3/2021
Medicine (11-14)	Registration to Practice During Declared State of Emergency Legislative	4/23/2020	5/23/2020	3/26/2020 Approved 3/26/2020	6/24/2020	Approved 11/16/2020	Bundled SB182		
Motor Vehicles (91-04)	Examination and Issuance of Driver's License Legislative	7/8/2020	8/9/2020		8/11/2020	Modified & Approved 9/25/2020 Filed 9/29/2020	Bundled HB2400		

RULE MONITOR

AGENCY/SERIES NUMBER	RULE	NOTICE	HEARING	EMER RULE	AGENCY APPROVED	LRMRC/LOCEA ACTION	LEGIS	FINAL FILE	EFFECTIVE
Motor Vehicles (91-05)	Denial, Suspension, Revocation, Disqualification, Restriction, Non-Renewal, Cancellation, Administrative Appeals and Reinstatement of Driving Privileges Legislative	7/15/2020	8/17/2020		8/19/2020	Approved 9/25/2020	Bundled HB2400		
Motor Vehicles (91-13)	Compulsory Motor Vehicle Liability Insurance Legislative	7/29/2020	8/28/2020		8/28/2020	Modified & Approved 9/25/2020 Filed 9/29/2020	Bundled HB2400		
Motor Vehicles (91-25)	Special Purpose Vehicles Legislative	7/1/2020	7/31/2020		8/7/2020	Modified & Approved 11/16/2020 Filed 11/17/2020	Bundled HB2400		
Natural Resources (58-46)	Defining the Terms Used in All Hunting and Trapping Legislative	7/29/2020	8/28/2020		8/28/2020	Approved 9/25/2020	Bundled SB216	4/15/2021	7/1/2021
Natural Resources (58-50)	Deer Hunting Rule Legislative	7/29/2020	8/28/2020		8/28/2020	Modified & Approved 9/25/2020 Filed 9/29/2020	Bundled SB216	4/15/2021	7/1/2021
Natural Resources (58-56)	Special Migratory Game Bird Hunting Legislative	7/29/2020	8/28/2020		8/28/2020	Approved 9/25/2020	Bundled SB216	4/15/2021	7/1/2021
Natural Resources (58-58)	Special Waterfowl Hunting Legislative	7/29/2020	8/28/2020		8/28/2020	Approved 9/25/2020	Bundled SB216	4/15/2021	7/1/2021
Occupational Therapy (13-09)	Telehealth Practice; Requirements; Definitions Legislative	6/15/2020	8/1/2020		8/10/2020	Approved 11/16/2020	Bundled SB182	4/5/2021	5/1/2021
Pharmacy (15-01)	Licensure and Practice of Pharmacy Legislative	4/30/2020	5/31/2020	4/30/2020 Approved 4/30/2020 Amendment 8/26/2020 Effective 10/7/2020	6/5/2020				
Pharmacy (15-01)	Licensure and Practice of Pharmacy Legislative	7/22/2020	8/21/2020		8/26/2020	Approved 11/16/2020	Bundled SB182		

RULE MONITOR									
AGENCY/SERIES NUMBER	RULE	NOTICE	HEARING	EMER RULE	AGENCY APPROVED	LRMRC/LOCEA ACTION	LEGIS	FINAL FILE	EFFECTIVE
Pharmacy (15-02)	Uniform Controlled Substances Act Legislative	4/30/2020	5/31/2020	4/1/2020 Approved 4/1/2020	6/5/2020				
Pharmacy (15-02)	Uniform Controlled Substances Act Legislative	7/22/2020	8/21/2020		8/26/2020	Modified & Approved 11/16/2020 Filed 12/2/2020	Bundled SB182		
Pharmacy (15-03)	Continuing Education for Licensure of Pharmacists Legislative	7/22/2020	8/21/2020		8/26/2020	Modified & Approved 11/16/2020 Filed 12/2/2020	Bundled SB182		
Pharmacy (15-05)	Licensure of Wholesale Drug Distributors, Third Party Logistics Providers, and Manufacturers Legislative	7/22/2020	8/21/2020		8/26/2020	Modified & Approved 11/16/2020 Filed 12/2/2020	Bundled SB182		
Pharmacy (15-08)	Controlled Substances Monitoring Program Legislative	7/22/2020	8/21/2020		8/26/2020	Modified & Approved 11/16/2020 Filed 12/2/2020	Bundled SB182		
Pharmacy (15-12)	Immunizations Administered by Pharmacist and Pharmacy Interns Legislative	5/1/2020 7/22/2020	6/2/2020 8/21/2020	4/20/2020 Approved 4/20/2020	6/5/2020 9/4/2020	Modified & Approved 11/16/2020 Filed 12/2/2020	Bundled SB182		
Physical Therapy (16-04)	Fees for Physical Therapist and Physical Therapist Assistant Legislative	7/28/2020	8/27/2020		8/28/2020	Modified & Approved 12/9/2020 Filed 12/16/2020	Bundled SB182	4/6/2021	5/1/2021
Physical Therapy (16-06)	Fees for Athletic Trainers Legislative	7/29/2020	8/28/2020		8/28/2020	Modified & Approved 12/9/2020 Filed 12/16/2020	Bundled SB182	4/6/2021	5/1/2021
Professional Surveyors (23-01)	Examination and Licensing of Professional Surveyors in WV Legislative	7/13/2020	8/14/2020		8/24/2020	Modified & Approved 11/16/2020 Filed 11/19/2020	Bundled SB182		

RULE MONITOR

AGENCY/SERIES NUMBER	RULE	NOTICE	HEARING	EMER RULE	AGENCY APPROVED	LRMRC/LOCEA ACTION	LEGIS	FINAL FILE	EFFECTIVE
Public Service Commission (150-02)	Rules for the Construction and Filing of Tariffs Legislative Exempt	8/4/2020	10/5/2020 Extended to 6/15/2021						
Public Service Commission (150-05)	Rules for the Government of Sewer Utilities Legislative Exempt	11/10/2020	1/11/2021 Extended to 1/18/2021						
Public Service Commission (150-07)	Rules for the Government of Water Utilities Legislative Exempt	11/10/2020	1/11/2021 Extended to 1/18/2021						
Public Service Commission (150-09)	Rules Governing Motor Carriers, Private Commercial Carriers, and the Filing of Evidence of Insurance and Financial Responsibility by Motor Carriers Legislative Exempt	8/4/2020	10/5/2020 Extended to 6/15/2021						
Public Service Commission (150-16)	Rules Governing the Transportation of Natural Gas Legislative Exempt	10/7/2020	11/16/2020					4/15/2021	6/14/2021
Racing Commission (178-01)	Thoroughbred Racing Legislative	6/18/2020	7/20/2020		8/21/2020	Modified & Approved 12/9/2020	Bundled SB160		
Racing Commission (178-02)	Greyhound Racing Legislative	6/18/2020	7/20/2020		8/17/2020	Approved 12/9/2020	Bundled SB160		
Racing Commission (178-10)	Advance Deposit Account Wagering (ADW) Legislative	7/1/2020	7/31/2020	7/1/2020 Approved 7/1/2020	8/17/2020	Modified & Approved 12/9/2020	Bundled SB160		
Real Estate Commission (174-01)	Licensing Real Estate Brokers, Associate Brokers, and Salespersons and the Conduct of Brokerage Business Legislative	7/21/2020	8/20/2020		8/24/2020	Modified & Approved 12/9/2020 Filed 12/11/2020	Bundled SB182		
Rehabilitation Services (198-01)	Ron Yost Personal Assistance Services Act Bd. Legislative	7/24/2020	8/26/2020		8/26/2020	Approved 12/9/2020	Bundled SB216		
Risk and Insurance Management (115-01)	Mine Subsidence Insurance Legislative	7/9/2020	8/8/2020		8/18/2020	Approved 11/17/2020	Bundled SB126		

RULE MONITOR

AGENCY/SERIES NUMBER	RULE	NOTICE	HEARING	EMER RULE	AGENCY APPROVED	LRMRC/LOCEA ACTION	LEGIS	FINAL FILE	EFFECTIVE
Risk and Insurance Management (115-02)	Public Entities Insurance Program Legislative	7/9/2020	8/8/2020		8/18/2020	Modified & Approved 11/17/2020 Filed 11/30/2020	Bundled SB126		
Risk and Insurance Management (115-05)	Procedure for Providing Written Notification of Claims of Potential Liability to the State or Its Employees (Repeal) Legislative	7/9/2020	8/8/2020		8/18/2020	Approved 11/17/2020	Bundled SB126		
Secretary of State (153-07)	Submission of Other Documents to Solicit Contributions for Charitable Organizations Interpretive	12/7/2020	1/8/2021						
Secretary of State (153-10)	Loan and Grant Programs Under the Help America Vote Act (HAVA) for the Purchase of Voting Equipment, Election Systems, Software, Services and Upgrades Legislative	4/24/2020	5/29/2020	3/25/2020 Amendment 4/24/2020 Amendment 4/27/2020 Effective 6/8/2020	6/23/2020	Modified & Approved 11/17/2020 Filed 12/4/2020	Bundled SB182		
Secretary of State (153-45)	Guidelines and Standards for Electronic Notarization Legislative	4/30/2020	6/1/2020	3/27/2020 Amendment 3/31/2020 Approved 4/1/2020	6/25/2020	Modified & Approved 11/17/2020 Filed 12/4/2020	Bundled SB182		
Secretary of State (153-53)	Election Processes and Absentee Eligibility During State of Emergency			3/20/2020 Effective 3/20/2020					
Senior Services (76-06)	Shared Table Initiative for Senior Citizens Legislative	7/24/2020	8/24/2020		8/25/2020	Modified & Approved 11/17/2020 Filed 11/30/2020	Bundled SB182	4/14/2021	4/14/2021
State Emergency Response Comm. (55-01)	Emergency Planning and Community Right to Know Legislative	7/13/2020	8/12/2020		8/28/2020	Approved 11/16/2020	Bundled SB156		
State Emergency Response Comm. (55-02)	Emergency Planning Grant Program Legislative	7/13/2020	8/12/2020		8/28/2020	Approved 11/16/2020	Bundled SB156		
Tax (110-01A)	Valuation of Farmland and Structures Situated Thereon for Ad Valorem Property Tax Purposes Legislative Exempt	Called up in the 2021 Legislative Session					Bundled SB160		

RULE MONITOR

AGENCY/SERIES NUMBER	RULE	NOTICE	HEARING	EMER RULE	AGENCY APPROVED	LRMRC/LOCEA ACTION	LEGIS	FINAL FILE	EFFECTIVE
Tax (110-13FF)	Tax Credit for Providing Vehicles to Low-Income Workers Legislative	6/22/2020	7/22/2020		8/17/2020	Modified & Approved 9/25/2020 Filed 10/5/2020	Bundled SB160	4/13/2021	4/13/2021
Tax (110-13GG)	Downstream Natural Gas Manufacturing Investment Tax Credit Legislative	6/22/2020	7/22/2020		7/29/2020	Approved 12/9/2020	Bundled SB160	4/13/2021	4/13/2021
Tax (110-13II)	High-Wage Growth Business Tax Credit Legislative	6/22/2020	7/22/2020		7/29/2020	Modified & Approved 9/25/2020 Filed 10/5/2020	Bundled SB160	4/13/2021	4/13/2021
Waste Mgmt., Div. of Water & Waste Mgmt. (33-20)	Hazardous Waste Management System Legislative	7/8/2020	8/11/2020		8/25/2020	Approved 9/25/2020	Bundled HB2382		
Water Resources Division of Water and Waste Management (47-02)	Requirements Governing Water Quality Standards Legislative	3/31/2020	5/19/2020		8/17/2020	Modified & Approved 12/9/2020 Filed 12/22/2020	Bundled HB2382		
Water Resources Division of Water and Waste Management (47-02B)	Assessment Methodology for the Biological Component of the Narrative Criteria in Wadeable Streams Procedural	2/9/2021	3/11/2021 Written Comments Extended To 3/26/2021						
Workers Compensation (85-17)	Electronic Submittal of Invoices and Receipt of Payments Legislative Exempt	4/1/2021	5/20/2021						

LEGISLATIVE RULES FILED PER THE SUNSET PROVISION W. Va. Code §29A-3-19							
AGENCY/SERIES NUMBER	**RULE/SUNSET DATE**	**REQUEST**	**AGENCY APPROVED**	**LRMRC/LOCEA ACTION**	**LEGIS**	**FINAL FILE**	**EFFECTIVE**
Community & Technical College Education 135-35	Correspondence, Business, Occupational, and Trade Schools 7/19/2022	4/5/2021					
Community & Technical College Education 135-52	Annual Reauthorization of Degree-Granting Institutions 7/19/2022	4/6/2021					
Dangerous Wild Animal Board (74-01)	Dangerous Wild Animals 6/5/2022	4/5/2021	4/5/2021				
Insurance Commission 114-98	Adoption of Valuation Manual 5/19/2022	3/31/2021	3/31/2021				
Registererd Professional Nurses 19-08	Limited Prescriptive Authority for Nurses in Advanced Practice 5/15/2022	3/17/2021					

WEST VIRGINIA SECRETARY OF STATE

MAC WARNER

ADMINISTRATIVE LAW DIVISION

eFILED
4/13/2021 10:38:47 AM

Office of West Virginia
Secretary Of State

LEGISLATIVE

NOTICE OF FINAL FILING AND ADOPTION OF A LEGISLATIVE RULE AUTHORIZED BY THE WEST VIRGINIA LEGISLATURE

AGENCY: Agriculture TITLE-SERIES: 61-01

RULE TYPE: Legislative Amendment to Existing Rule: Yes Repeal of existing rule: No

RULE NAME: Animal Disease Control

CITE STATUTORY AUTHORITY: §19-9-2 §19-9-4

The above rule has been authorized by the West Virginia Legislature.

Authorization is cited in (house or senate bill number) SB182

Section §64-9-1 Passed On 3/23/2021 12:00:00 AM

This rule is filed with the Secretary of State. This rule becomes effective on the following date:

May 3, 2021

This rule shall terminate and have no further force or effect from the following date:

August 01, 2031

BY CHOOSING 'YES', I ATTEST THAT THE PREVIOUS STATEMENT IS TRUE AND CORRECT.

Yes

Norman Bailey -- By my signature, I certify that I am the person authorized to file legislative rules, in accordance with West Virginia Code §29A-3-11 and §39A-3-2.

WEST VIRGINIA SECRETARY OF STATE

MAC WARNER

ADMINISTRATIVE LAW DIVISION

eFILED
4/13/2021 11:35:41 AM

Office of West Virginia
Secretary Of State

NOTICE OF FINAL FILING AND ADOPTION OF A LEGISLATIVE RULE AUTHORIZED BY THE WEST VIRGINIA LEGISLATURE

AGENCY: Agriculture TITLE-SERIES: 61-09

RULE TYPE: Legislative Amendment to Existing Rule: Yes Repeal of existing rule: No

RULE NAME: West Virginia Seed Law

CITE STATUTORY AUTHORITY: §19-16-6

The above rule has been authorized by the West Virginia Legislature.

Authorization is cited in (house or senate bill number) SB 182

Section §64-9-1 Passed On 3/23/2021 12:00:00 AM

This rule is filed with the Secretary of State. This rule becomes effective on the following date:

May 3, 2021

This rule shall terminate and have no further force or effect from the following date:

August 01, 2031

BY CHOOSING 'YES', I ATTEST THAT THE PREVIOUS STATEMENT IS TRUE AND CORRECT.

Yes

Norman Bailey -- By my signature, I certify that I am the person authorized to file legislative rules, in accordance with West Virginia Code §29A-3-11 and §39A-3-2.

WEST VIRGINIA SECRETARY OF STATE
MAC WARNER
ADMINISTRATIVE LAW DIVISION

eFILED
4/13/2021 12:55:03 PM
Office of West Virginia
Secretary Of State

LEGISLATIVE

NOTICE OF FINAL FILING AND ADOPTION OF A LEGISLATIVE RULE AUTHORIZED BY THE WEST VIRGINIA LEGISLATURE

AGENCY: Agriculture TITLE-SERIES: 61-16

RULE TYPE: Legislative Amendment to Existing Rule: Yes Repeal of existing rule: No

RULE NAME: Inspection of Meat and Poultry

CITE STATUTORY AUTHORITY: §19-2B-3

The above rule has been authorized by the West Virginia Legislature.

Authorization is cited in (house or senate bill number) SB 182

Section §64-9-1 Passed On 3/23/2021 12:00:00 AM

This rule is filed with the Secretary of State. This rule becomes effective on the following date:

May 3, 2021

This rule shall terminate and have no further force or effect from the following date:

August 01, 2031

BY CHOOSING 'YES', I ATTEST THAT THE PREVIOUS STATEMENT IS TRUE AND CORRECT.

Yes
Norman Bailey -- By my signature, I certify that I am the person authorized to file legislative rules, in accordance with West Virginia Code §29A-3-11 and §39A-3-2.

WEST VIRGINIA SECRETARY OF STATE
MAC WARNER
ADMINISTRATIVE LAW DIVISION

eFILED
4/13/2021 12:08:02 PM
Office of West Virginia
Secretary Of State

NOTICE OF FINAL FILING AND ADOPTION OF A LEGISLATIVE RULE AUTHORIZED BY THE WEST VIRGINIA LEGISLATURE

AGENCY: Agriculture TITLE-SERIES: 61-28

RULE TYPE: Legislative Amendment to Existing Rule: Yes Repeal of existing rule: No

RULE NAME: Poultry Litter and Manure Movement into primary poultry breeder rearing areas

CITE STATUTORY AUTHORITY: §19-9-2 §19-9-10

The above rule has been authorized by the West Virginia Legislature.

Authorization is cited in (house or senate bill number) SB 182

Section §64-9-1 Passed On 3/23/2021 12:00:00 AM

This rule is filed with the Secretary of State. This rule becomes effective on the following date:

May 3, 2021

This rule shall terminate and have no further force or effect from the following date:

August 01, 2031

BY CHOOSING 'YES', I ATTEST THAT THE PREVIOUS STATEMENT IS TRUE AND CORRECT.

Yes
Norman Bailey – By my signature, I certify that I am the person authorized to file legislative rules, in accordance with West Virginia Code §29A-3-11 and §39A-3-2.

WEST VIRGINIA SECRETARY OF STATE
MAC WARNER
ADMINISTRATIVE LAW DIVISION

eFILED
4/13/2021 3:53:23 PM
Office of West Virginia
Secretary Of State

LEGISLATIVE

NOTICE OF FINAL FILING AND ADOPTION OF A LEGISLATIVE RULE AUTHORIZED BY THE WEST VIRGINIA LEGISLATURE

AGENCY: Agriculture TITLE-SERIES: 61-39

RULE TYPE: Legislative Amendment to Existing Rule: Yes Repeal of existing rule: No

RULE NAME: Seed Certification Program

CITE STATUTORY AUTHORITY: §19-16-3a §19-16-6

The above rule has been authorized by the West Virginia Legislature.

Authorization is cited in (house or senate bill number) SB 182

Section §64-9-1 Passed On 3/23/2021 12:00:00 AM

This rule is filed with the Secretary of State. This rule becomes effective on the following date:

May 3, 2021

This rule shall terminate and have no further force or effect from the following date:

August 01, 2031

BY CHOOSING 'YES', I ATTEST THAT THE PREVIOUS STATEMENT IS TRUE AND CORRECT.

Yes

Norman Bailey -- By my signature, I certify that I am the person authorized to file legislative rules, in accordance with West Virginia Code §29A-3-11 and §39A-3-2.

WEST VIRGINIA SECRETARY OF STATE
MAC WARNER
ADMINISTRATIVE LAW DIVISION

eFILED
4/13/2021 11:55:11 AM
Office of West Virginia
Secretary Of State

NOTICE OF FINAL FILING AND ADOPTION OF A LEGISLATIVE RULE AUTHORIZED BY THE WEST VIRGINIA LEGISLATURE

AGENCY: Agriculture TITLE-SERIES: 61-40

RULE TYPE: Legislative Amendment to Existing Rule: Yes Repeal of existing rule: No

RULE NAME: WV Exempted Dairy Farms and Milk and Milk Products Processing Rules

CITE STATUTORY AUTHORITY: §19-11E-8

The above rule has been authorized by the West Virginia Legislature.

Authorization is cited in (house or senate bill number) SB 182

Section §64-9-1 Passed On 3/23/2021 12:00:00 AM

This rule is filed with the Secretary of State. This rule becomes effective on the following date:

May 3, 2021

This rule shall terminate and have no further force or effect from the following date:

August 01, 2026

BY CHOOSING 'YES', I ATTEST THAT THE PREVIOUS STATEMENT IS TRUE AND CORRECT.

Yes

Norman Bailey -- By my signature, I certify that I am the person authorized to file legislative rules, in accordance with West Virginia Code §29A-3-11 and §39A-3-2.

WEST VIRGINIA SECRETARY OF STATE

MAC WARNER

ADMINISTRATIVE LAW DIVISION

eFILED
4/13/2021 10:20:19 AM

Office of West Virginia
Secretary Of State

LEGISLATIVE

NOTICE OF FINAL FILING AND ADOPTION OF A LEGISLATIVE RULE AUTHORIZED BY THE WEST VIRGINIA LEGISLATURE

AGENCY: Auditor TITLE-SERIES: 155-01

RULE TYPE: Legislative Amendment to Existing Rule: Yes Repeal of existing rule: No

RULE NAME: STANDARDS FOR REQUISITIONS FOR PAYMENT ISSUED BY STATE OFFICERS ON THE AUDITOR

CITE STATUTORY AUTHORITY: 12-3-10; 12-3-10f.

The above rule has been authorized by the West Virginia Legislature.

Authorization is cited in (house or senate bill number) SB 182

Section 64-9-2 Passed On 3/25/2021 12:00:00 AM

This rule is filed with the Secretary of State. This rule becomes effective on the following date:

May 15, 2021

This rule shall terminate and have no further force or effect from the following date:

May 15, 2026

BY CHOOSING 'YES', I ATTEST THAT THE PREVIOUS STATEMENT IS TRUE AND CORRECT.

Yes

Stephen R Connolly -- By my signature, I certify that I am the person authorized to file legislative rules, in accordance with West Virginia Code §29A-3-11 and §39A-3-2.

WEST VIRGINIA SECRETARY OF STATE

MAC WARNER

ADMINISTRATIVE LAW DIVISION

eFILED
4/15/2021 8:58 AM

Office of West Virginia
Secretary Of State

NOTICE OF FINAL FILING AND ADOPTION OF A LEGISLATIVE EXEMPT, INTERPRETIVE OR PROCEDURAL RULE

AGENCY: Education TITLE-SERIES: 126-007

RULE TYPE: Legislative Exempt Amendment to Existing Rule: Yes Repeal of existing rule: No

RULE NAME: Regulations for Adult Diversion and Transition Programs (1471)

CITE STATUTORY AUTHORITY: W. Va. Code §§29A-3B-1, et seq.; W. Va. Board of Education v. Hechler, 180 W. Va. 451, 376 S.E.2d 839 (1988); and, W. Va. Bd. of Educ. V. Bd. of Educ., 239 W. Va. 705, 806 S.E. 2d 136 (2017)

This rule is filed with the Secretary of State. This rule becomes effective on the following date:

July 1, 2021

BY CHOOSING 'YES', I ATTEST THAT THE PREVIOUS STATEMENT IS TRUE AND CORRECT.

Yes

Michele L Blatt -- By my signature, I certify that I am the person authorized to file legislative rules, in accordance with West Virginia Code §29A-3-11 and §39A-3-2.

WEST VIRGINIA SECRETARY OF STATE

MAC WARNER

ADMINISTRATIVE LAW DIVISION

eFILED
4/15/2021 8:54 AM
Office of West Virginia
Secretary Of State

LEGISLATIVE

NOTICE OF FINAL FILING AND ADOPTION OF A LEGISLATIVE EXEMPT, INTERPRETIVE OR PROCEDURAL RULE

AGENCY: Education TITLE-SERIES: 126-008

RULE TYPE: Legislative Exempt Amendment to Existing Rule: Yes Repeal of existing rule: No

RULE NAME: Drug-Free Workplace (1461)

CITE STATUTORY AUTHORITY: W. Va. Code §§29A-3B-1, et seq.; W. Va. Board of Education v. Hechler, 180 W. Va. 451, 376 S.E.2d 839 (1988); and, W. Va. Bd. of Educ. V. Bd. of Educ., 239 W. Va. 705, 806 S.E. 2d 136 (2017)

This rule is filed with the Secretary of State. This rule becomes effective on the following date:

May 17, 2021

BY CHOOSING 'YES', I ATTEST THAT THE PREVIOUS STATEMENT IS TRUE AND CORRECT.

Yes
Michele L Blatt -- By my signature, I certify that I am the person authorized to file legislative rules, in accordance with West Virginia Code §29A-3-11 and §39A-3-2.

WEST VIRGINIA SECRETARY OF STATE

MAC WARNER

ADMINISTRATIVE LAW DIVISION

eFILED
4/15/2021 8:51:51 AM
Office of West Virginia
Secretary Of State

NOTICE OF PUBLIC COMMENT PERIOD

AGENCY: Education TITLE-SERIES: 126-030

RULE TYPE: Legislative Exempt Amendment to Existing Rule: Yes Repeal of existing rule: No

RULE NAME: Transformative System of Support for Early Literacy (2512)

CITE STATUTORY AUTHORITY: W. Va. Code §§29A-3B-1, et seq.; W. Va. Board of Education v. Hechler, 180 W. Va. 451, 376 S.E.2d 839 (1988); and, W. Va. Bd. of Educ. V. Bd. of Educ., 239 W. Va. 705, 806 S.E. 2d 136 (2017)

COMMENTS LIMITED TO:

Written

DATE OF PUBLIC HEARING:

LOCATION OF PUBLIC HEARING:

DATE WRITTEN COMMENT PERIOD ENDS: 05/17/2021 4:00 PM

COMMENTS MAY BE MAILED OR EMAILED TO:

NAME: Dr. Monica DellaMea, Director, Early and Elementary Learning Services

ADDRESS: Capitol Bldg. 6, Room 215, 1900 Kanawha Blvd., East

Charleston, West Virginia 25305

EMAIL: mdellamea@k12.wv.us

PLEASE INDICATE IF THIS FILING INCLUDES:

RELEVANT FEDERAL STATUTES OR REGULATIONS: No

(IF YES, PLEASE UPLOAD IN THE SUPPORTING DOCUMENTS FIELD)

INCORPORATED BY REFERENCE: No

(IF YES, PLEASE UPLOAD IN THE SUPPORTING DOCUMENTS FIELD)

WEST VIRGINIA SECRETARY OF STATE

MAC WARNER

ADMINISTRATIVE LAW DIVISION

eFILED

4/15/2021 8:48:27 AM

Office of West Virginia Secretary Of State

LEGISLATIVE

NOTICE OF PUBLIC COMMENT PERIOD

AGENCY: Education TITLE-SERIES: 126-069

RULE TYPE: Legislative Exempt Amendment to Existing Rule: Yes Repeal of existing rule: No

RULE NAME: Regulations for Juvenile Diversion and Transition Programs (2800)

CITE STATUTORY AUTHORITY: W. Va. Code §§29A-3B-1, et seq.; W. Va. Board of Education v. Hechler, 180 W. Va. 451, 376 S.E.2d 839 (1988); and, W. Va. Bd. of Educ. V. Bd. of Educ., 239 W. Va. 705, 806 S.E. 2d 136 (2017)

COMMENTS LIMITED TO:

Written

DATE OF PUBLIC HEARING:

LOCATION OF PUBLIC HEARING:

DATE WRITTEN COMMENT PERIOD ENDS: 05/17/2021 4:00 PM

COMMENTS MAY BE MAILED OR EMAILED TO:

NAME: Jacob Green, Superintendent, West Virginia Schools of Diversion and Transition

ADDRESS: Capitol Building 6, Room 825

Charleston, West Virginia 25305

EMAIL: jgreen@k12.wv.us

PLEASE INDICATE IF THIS FILING INCLUDES:

RELEVANT FEDERAL STATUTES OR REGULATIONS: No

(IF YES, PLEASE UPLOAD IN THE SUPPORTING DOCUMENTS FIELD)

INCORPORATED BY REFERENCE: No

(IF YES, PLEASE UPLOAD IN THE SUPPORTING DOCUMENTS FIELD)

WEST VIRGINIA SECRETARY OF STATE

MAC WARNER

ADMINISTRATIVE LAW DIVISION

eFILED

4/9/2021 2:20:23 PM

Office of West Virginia Secretary Of State

NOTICE OF FINAL FILING AND ADOPTION OF A LEGISLATIVE RULE AUTHORIZED BY THE WEST VIRGINIA LEGISLATURE

AGENCY: Environmental Protection Secretarys Office TITLE-SERIES: 60-03

RULE TYPE: Legislative Amendment to Existing Rule: Yes Repeal of existing rule: No

RULE NAME: Voluntary Remediation and Redevelopment Rule

CITE STATUTORY AUTHORITY: W. Va. Code §§ 22-22-3 and 22-22-4(c)

The above rule has been authorized by the West Virginia Legislature.

Authorization is cited in (house or senate bill number) HB2382

Section § 64-3-1(j) Passed On 3/26/2021 12:00:00 AM

This rule is filed with the Secretary of State. This rule becomes effective on the following date:

June 1, 2021

This rule shall terminate and have no further force or effect from the following date:

BY CHOOSING 'YES', I ATTEST THAT THE PREVIOUS STATEMENT IS TRUE AND CORRECT.

Yes

Jason E Wandling -- By my signature, I certify that I am the person authorized to file legislative rules, in accordance with West Virginia Code §29A-3-11 and §39A-3-2.

WEST VIRGINIA SECRETARY OF STATE
MAC WARNER
ADMINISTRATIVE LAW DIVISION

eFILED
4/12/2021 10:50:12 AM
Office of West Virginia
Secretary Of State

LEGISLATIVE

NOTICE OF PUBLIC COMMENT PERIOD

AGENCY: Fire Commission TITLE-SERIES: 87-10

RULE TYPE: Legislative Amendment to Existing Rule: No Repeal of existing rule: No

RULE NAME: Volunteer Fire Department Equipment and Training Grant Funding Disbursement

CITE STATUTORY AUTHORITY: 15A-11-11

COMMENTS LIMITED TO:

Written

DATE OF PUBLIC HEARING:

LOCATION OF PUBLIC HEARING:

DATE WRITTEN COMMENT PERIOD ENDS: 05/31/2021 4:00 p.m.

COMMENTS MAY BE MAILED OR EMAILED TO:

NAME: Ken Tyree

ADDRESS: 1207 Quarrier Street

Charleston, WV 25301

EMAIL: kenneth.e.tyree@wv.gov

PLEASE INDICATE IF THIS FILING INCLUDES:

RELEVANT FEDERAL STATUTES OR REGULATIONS: No

(IF YES, PLEASE UPLOAD IN THE SUPPORTING DOCUMENTS FIELD)

INCORPORATED BY REFERENCE: No

(IF YES, PLEASE UPLOAD IN THE SUPPORTING DOCUMENTS FIELD)

WEST VIRGINIA SECRETARY OF STATE
MAC WARNER
ADMINISTRATIVE LAW DIVISION

eFILED
4/12/2021 11:49:49 AM
Office of West Virginia
Secretary Of State

NOTICE OF FINAL FILING AND ADOPTION OF A LEGISLATIVE RULE AUTHORIZED BY THE WEST VIRGINIA LEGISLATURE

AGENCY: Insurance Commission TITLE-SERIES: 114-02A

RULE TYPE: Legislative Amendment to Existing Rule: Yes Repeal of existing rule: No

RULE NAME: CONTINUING EDUCATION FOR INDIVIDUAL INSURANCE PRODUCERS AND INDIVIDUAL INSURANCE ADJUSTERS

CITE STATUTORY AUTHORITY: W. Va. Code §§33-2-10, 33-12-35 and 33-12B-12

The above rule has been authorized by the West Virginia Legislature.

Authorization is cited in (house or senate bill number) House Bill 4502 (2020)

Section W.Va. Code 33-12B-12 Passed On 3/6/2020 12:00:00 AM

This rule is filed with the Secretary of State. This rule becomes effective on the following date:

July 1, 2021

This rule shall terminate and have no further force or effect from the following date:

August 01, 2026

BY CHOOSING 'YES', I ATTEST THAT THE PREVIOUS STATEMENT IS TRUE AND CORRECT.

Yes
Allen R Prunty -- By my signature, I certify that I am the person authorized to file legislative rules, in accordance with West Virginia Code §29A-3-11 and §39A-3-2.

WEST VIRGINIA SECRETARY OF STATE

MAC WARNER

ADMINISTRATIVE LAW DIVISION

eFILED
4/12/2021 11:55:23 AM

Office of West Virginia
Secretary Of State

LEGISLATIVE

NOTICE OF FINAL FILING AND ADOPTION OF A LEGISLATIVE RULE AUTHORIZED BY THE WEST VIRGINIA LEGISLATURE

AGENCY: Insurance Commission TITLE-SERIES: 114-25

RULE TYPE: Legislative Amendment to Existing Rule: Yes Repeal of existing rule: No

RULE NAME: INSURANCE ADJUSTERS

CITE STATUTORY AUTHORITY: §§33-12B-12 and 33-2-10

The above rule has been authorized by the West Virginia Legislature.

Authorization is cited in (house or senate bill number) House Bill 4502 (2020)

Section W.Va. Code 33-12B-12 Passed On 3/6/2020 12:00:00 AM

This rule is filed with the Secretary of State. This rule becomes effective on the following date:

July 1, 2021

This rule shall terminate and have no further force or effect from the following date:

August 01, 2026

BY CHOOSING 'YES', I ATTEST THAT THE PREVIOUS STATEMENT IS TRUE AND CORRECT.

Yes

Allen R Prunty -- By my signature, I certify that I am the person authorized to file legislative rules, in accordance with West Virginia Code §29A-3-11 and §39A-3-2.

WEST VIRGINIA SECRETARY OF STATE

MAC WARNER

ADMINISTRATIVE LAW DIVISION

eFILED
4/12/2021 12:04:09 PM

Office of West Virginia
Secretary Of State

NOTICE OF FINAL FILING AND ADOPTION OF A LEGISLATIVE RULE AUTHORIZED BY THE WEST VIRGINIA LEGISLATURE

AGENCY: Insurance Commission TITLE-SERIES: 114-40

RULE TYPE: Legislative Amendment to Existing Rule: Yes Repeal of existing rule: No

RULE NAME: CREDIT FOR REINSURANCE

CITE STATUTORY AUTHORITY: W. Va. Code §§33-2-10 and 33-4-15a(e).

The above rule has been authorized by the West Virginia Legislature.

Authorization is cited in (house or senate bill number) House Bill 4146 (2020)

Section W. Va. Code §33-4-15a(e). Passed On 3/4/2020 12:00:00 AM

This rule is filed with the Secretary of State. This rule becomes effective on the following date:

July 1, 2021

This rule shall terminate and have no further force or effect from the following date:

August 01, 2026

BY CHOOSING 'YES', I ATTEST THAT THE PREVIOUS STATEMENT IS TRUE AND CORRECT.

Yes

Allen R Prunty -- By my signature, I certify that I am the person authorized to file legislative rules, in accordance with West Virginia Code §29A-3-11 and §39A-3-2.

WEST VIRGINIA SECRETARY OF STATE
MAC WARNER
ADMINISTRATIVE LAW DIVISION

eFILED
4/12/2021 11:59:11 AM
Office of West Virginia
Secretary Of State

LEGISLATIVE

NOTICE OF FINAL FILING AND ADOPTION OF A LEGISLATIVE RULE AUTHORIZED BY THE WEST VIRGINIA LEGISLATURE

AGENCY: Insurance Commission TITLE-SERIES: 114-42

RULE TYPE: Legislative Amendment to Existing Rule: Yes Repeal of existing rule: No

RULE NAME: CONTINUING EDUCATION FOR INDIVIDUAL INSURANCE PRODUCERS AND INDIVIDUAL INSURANCE ADJUSTERS

CITE STATUTORY AUTHORITY: W. Va. Code §§33-2-10, 33-12-35 and 33-12B-12.

The above rule has been authorized by the West Virginia Legislature.

Authorization is cited in (house or senate bill number) House Bill 4502 (2020)

Section W.Va. Code 33-12B-12 Passed On 3/6/2020 12:00:00 AM

This rule is filed with the Secretary of State. This rule becomes effective on the following date:

July 1, 2021

This rule shall terminate and have no further force or effect from the following date:

August 01, 2026

BY CHOOSING 'YES', I ATTEST THAT THE PREVIOUS STATEMENT IS TRUE AND CORRECT.

Yes

Allen R Prunty -- By my signature, I certify that I am the person authorized to file legislative rules, in accordance with West Virginia Code §29A-3-11 and §39A-3-2.

WEST VIRGINIA SECRETARY OF STATE
MAC WARNER
ADMINISTRATIVE LAW DIVISION

eFILED
4/14/2021 11:46:57 AM
Office of West Virginia
Secretary Of State

NOTICE OF FINAL FILING AND ADOPTION OF A LEGISLATIVE RULE AUTHORIZED BY THE WEST VIRGINIA LEGISLATURE

AGENCY: Insurance Commission TITLE-SERIES: 114-64

RULE TYPE: Legislative Amendment to Existing Rule: Yes Repeal of existing rule: Yes

RULE NAME: MENTAL HEALTH PARITY

CITE STATUTORY AUTHORITY: W. Va. Code §§33-2-10, 33-15-4u, 33-16-3ff, 33-24-7u, 33-25-8r, and 33-25A-8u.

The above rule has been authorized by the West Virginia Legislature.

Authorization is cited in (house or senate bill number) Senate Bill 291 (2020)

Section W.Va. Code §§33-15-4u(h), §33-16-3ff(h), 33-24-7u(h), 33-25-8r(h), and 33-25A-8u(h). Passed On 3/7/2020 12:00:00 AM

This rule is filed with the Secretary of State. This rule becomes effective on the following date:

May 1, 2021

This rule shall terminate and have no further force or effect from the following date:

August 01, 2026

BY CHOOSING 'YES', I ATTEST THAT THE PREVIOUS STATEMENT IS TRUE AND CORRECT.

Yes

Allen R Prunty -- By my signature, I certify that I am the person authorized to file legislative rules, in accordance with West Virginia Code §29A-3-11 and §39A-3-2.

WEST VIRGINIA SECRETARY OF STATE
MAC WARNER
ADMINISTRATIVE LAW DIVISION

eFILED
4/13/2021 2:02:54 PM
Office of West Virginia
Secretary Of State

LEGISLATIVE

NOTICE OF FINAL FILING AND ADOPTION OF A LEGISLATIVE RULE AUTHORIZED BY THE WEST VIRGINIA LEGISLATURE

AGENCY: Livestock Care Standards Board TITLE-SERIES: 73-01

RULE TYPE: Legislative Amendment to Existing Rule: Yes Repeal of existing rule: No

RULE NAME: Livstock Care Standards

CITE STATUTORY AUTHORITY: §19-1C-4

The above rule has been authorized by the West Virginia Legislature.

Authorization is cited in (house or senate bill number) SB 182

Section §64-9-1 Passed On 3/23/2021 12:00:00 AM

This rule is filed with the Secretary of State. This rule becomes effective on the following date:

May 3, 2021

This rule shall terminate and have no further force or effect from the following date:

August 01, 2031

BY CHOOSING 'YES', I ATTEST THAT THE PREVIOUS STATEMENT IS TRUE AND CORRECT.

Yes
Norman Bailey -- By my signature, I certify that I am the person authorized to file legislative rules, in accordance with West Virginia Code §29A-3-11 and §39A-3-2.

WEST VIRGINIA SECRETARY OF STATE
MAC WARNER
ADMINISTRATIVE LAW DIVISION

eFILED
4/15/2021 10:06:47 AM
Office of West Virginia
Secretary Of State

NOTICE OF FINAL FILING AND ADOPTION OF A LEGISLATIVE RULE AUTHORIZED BY THE WEST VIRGINIA LEGISLATURE

AGENCY: Natural Resources TITLE-SERIES: 58-46

RULE TYPE: Legislative Amendment to Existing Rule: Yes Repeal of existing rule: No

RULE NAME: DEFINING THE TERMS USED IN ALL HUNTING AND TRAPPING

CITE STATUTORY AUTHORITY: §20-1-7(31)

The above rule has been authorized by the West Virginia Legislature.

Authorization is cited in (house or senate bill number) SB 216

Section §64-10-4 Passed On 3/11/2021 12:00:00 AM

This rule is filed with the Secretary of State. This rule becomes effective on the following date:

July 1, 2021

This rule shall terminate and have no further force or effect from the following date:

August 01, 2026

BY CHOOSING 'YES', I ATTEST THAT THE PREVIOUS STATEMENT IS TRUE AND CORRECT.

Yes
Jack M Rife -- By my signature, I certify that I am the person authorized to file legislative rules, in accordance with West Virginia Code §29A-3-11 and §39A-3-2.

WEST VIRGINIA SECRETARY OF STATE
MAC WARNER
ADMINISTRATIVE LAW DIVISION

eFILED
4/15/2021 10:10:33 AM
Office of West Virginia
Secretary Of State

LEGISLATIVE

NOTICE OF FINAL FILING AND ADOPTION OF A LEGISLATIVE RULE AUTHORIZED BY THE WEST VIRGINIA LEGISLATURE

AGENCY: Natural Resources TITLE-SERIES: 58-50

RULE TYPE: Legislative Amendment to Existing Rule: Yes Repeal of existing rule: No

RULE NAME: DEER HUNTING RULE

CITE STATUTORY AUTHORITY: §20-1-7(31)

The above rule has been authorized by the West Virginia Legislature.

Authorization is cited in (house or senate bill number) SB 216

Section §64-10-4 Passed On 3/11/2021 12:00:00 AM

This rule is filed with the Secretary of State. This rule becomes effective on the following date:

July 1, 2021

This rule shall terminate and have no further force or effect from the following date:

August 01, 2026

BY CHOOSING 'YES', I ATTEST THAT THE PREVIOUS STATEMENT IS TRUE AND CORRECT.

Yes
Jack M Rife -- By my signature, I certify that I am the person authorized to file legislative rules, in accordance with West Virginia Code §29A-3-11 and §39A-3-2.

WEST VIRGINIA SECRETARY OF STATE
MAC WARNER
ADMINISTRATIVE LAW DIVISION

eFILED
4/15/2021 10:12:42 AM
Office of West Virginia
Secretary Of State

NOTICE OF FINAL FILING AND ADOPTION OF A LEGISLATIVE RULE AUTHORIZED BY THE WEST VIRGINIA LEGISLATURE

AGENCY: Natural Resources TITLE-SERIES: 58-56

RULE TYPE: Legislative Amendment to Existing Rule: Yes Repeal of existing rule: No

RULE NAME: SPECIAL MIGRATORY GAME BIRD HUNTING

CITE STATUTORY AUTHORITY: §20-1-7(31)

The above rule has been authorized by the West Virginia Legislature.

Authorization is cited in (house or senate bill number) SB 216

Section §64-10-4 Passed On 3/11/2021 12:00:00 AM

This rule is filed with the Secretary of State. This rule becomes effective on the following date:

July 1, 2021

This rule shall terminate and have no further force or effect from the following date:

August 01, 2026

BY CHOOSING 'YES', I ATTEST THAT THE PREVIOUS STATEMENT IS TRUE AND CORRECT.

Yes
Jack M Rife -- By my signature, I certify that I am the person authorized to file legislative rules, in accordance with West Virginia Code §29A-3-11 and §39A-3-2.

WEST VIRGINIA SECRETARY OF STATE
MAC WARNER
ADMINISTRATIVE LAW DIVISION

eFILED
4/15/2021 10:14:48 AM
Office of West Virginia
Secretary Of State

LEGISLATIVE

NOTICE OF FINAL FILING AND ADOPTION OF A LEGISLATIVE RULE AUTHORIZED BY THE WEST VIRGINIA LEGISLATURE

AGENCY: Natural Resources TITLE-SERIES: 58-58

RULE TYPE: Legislative Amendment to Existing Rule: Yes Repeal of existing rule: No

RULE NAME: SPECIAL WATERFOWL HUNTING

CITE STATUTORY AUTHORITY: §20-1-7(31)

The above rule has been authorized by the West Virginia Legislature.

Authorization is cited in (house or senate bill number) SB 216

Section §64-10-4 Passed On 3/11/2021 12:00:00 AM

This rule is filed with the Secretary of State. This rule becomes effective on the following date:

July 1, 2021

This rule shall terminate and have no further force or effect from the following date:

August 01, 2026

BY CHOOSING 'YES', I ATTEST THAT THE PREVIOUS STATEMENT IS TRUE AND CORRECT.

Yes
Jack M Rife -- By my signature, I certify that I am the person authorized to file legislative rules, in accordance with West Virginia Code §29A-3-11 and §39A-3-2.

WEST VIRGINIA SECRETARY OF STATE
MAC WARNER
ADMINISTRATIVE LAW DIVISION

eFILED
4/13/2021 9:56 AM
Office of West Virginia
Secretary Of State

NOTICE OF TECHNICAL AMENDMENT

AGENCY: Osteopathic Medicine TITLE-SERIES: 24-01

RULE TYPE: Legislative

RULE NAME: Licensing Procedures for Osteopathic Physicians

CITE STATUTORY AUTHORITY: 30-14-14

LIST WITH DETAIL EACH SPECIFIC CHANGE MADE TO THE RULE AND WHERE IT CAN BE FOUND:

Section 1.3. - Inserted "Technical amendment filed April 13, 2021."

Section 1.5. - Changed sunset provision date to August 1, 2026.

FILING DATE: 04/13/2021 EFFECTIVE DATE: 04/06/2021

BY CHOOSING 'YES', I ATTEST THAT THE PREVIOUS STATEMENT IS TRUE AND CORRECT.

Yes
Chase Holcomb -- By my signature, I certify that I am the person authorized to file legislative rules, in accordance with West Virginia Code §29A-3-11 and §39A-3-2.

WEST VIRGINIA SECRETARY OF STATE

MAC WARNER

ADMINISTRATIVE LAW DIVISION

eFILED
4/13/2021 9:59 AM

Office of West Virginia
Secretary Of State

LEGISLATIVE

NOTICE OF TECHNICAL AMENDMENT

AGENCY: Osteopathic Medicine TITLE-SERIES: 24-09

RULE TYPE: Legislative

RULE NAME: Emergency Temporary Permits to Practice During States of Emergency or States of Preparedness

CITE STATUTORY AUTHORITY: 30-14-14

LIST WITH DETAIL EACH SPECIFIC CHANGE MADE TO THE RULE AND WHERE IT CAN BE FOUND:

Section 1.3. - Inserted "Technical amendment filed April 13, 2021."

Section 1.5. - Changed sunset provision date to August 1, 2026.

FILING DATE: 04/13/2021 EFFECTIVE DATE: 04/06/2021

BY CHOOSING 'YES', I ATTEST THAT THE PREVIOUS STATEMENT IS TRUE AND CORRECT.

Yes

Chase Holcomb -- By my signature, I certify that I am the person authorized to file legislative rules, in accordance with West Virginia Code §29A-3-11 and §39A-3-2.

WEST VIRGINIA SECRETARY OF STATE

MAC WARNER

ADMINISTRATIVE LAW DIVISION

eFILED
4/15/2021 11:03 AM

Office of West Virginia
Secretary Of State

NOTICE OF FINAL FILING AND ADOPTION OF A LEGISLATIVE EXEMPT, INTERPRETIVE OR PROCEDURAL RULE

AGENCY: Public Service Commission TITLE-SERIES: 150-16

RULE TYPE: Legislative Exempt Amendment to Existing Rule: Yes Repeal of existing rule: No

RULE NAME: Rules Governing the Transportation of Natural Gas

CITE STATUTORY AUTHORITY: 24-1-1, 24-1-7, 24-2-7, 24-2-11, and 24-2-20, 24-3-3a

This rule is filed with the Secretary of State. This rule becomes effective on the following date:

June 14, 2021

BY CHOOSING 'YES', I ATTEST THAT THE PREVIOUS STATEMENT IS TRUE AND CORRECT.

Yes

Jane Neal -- By my signature, I certify that I am the person authorized to file legislative rules, in accordance with West Virginia Code §29A-3-11 and §39A-3-2.

WEST VIRGINIA SECRETARY OF STATE
MAC WARNER
ADMINISTRATIVE LAW DIVISION

eFILED
4/14/2021 4:08:23 PM
Office of West Virginia
Secretary Of State

LEGISLATIVE

NOTICE OF FINAL FILING AND ADOPTION OF A LEGISLATIVE RULE AUTHORIZED BY THE WEST VIRGINIA LEGISLATURE

AGENCY: Senior Services TITLE-SERIES: 76-06

RULE TYPE: Legislative Amendment to Existing Rule: No Repeal of existing rule: No

RULE NAME: Shared Table Initiative For Senior Citizens

CITE STATUTORY AUTHORITY: §16-5P-6

The above rule has been authorized by the West Virginia Legislature.

Authorization is cited in (house or senate bill number) Senate Bill 162

Section §64-9-17 Passed On 3/23/2021 12:00:00 AM

This rule is filed with the Secretary of State. This rule becomes effective on the following date:

April 14, 2021

This rule shall terminate and have no further force or effect from the following date:

August 01, 2026

BY CHOOSING 'YES', I ATTEST THAT THE PREVIOUS STATEMENT IS TRUE AND CORRECT.

Yes

Robert E Roswall – By my signature, I certify that I am the person authorized to file legislative rules, in accordance with West Virginia Code §29A-3-11 and §39A-3-2.

WEST VIRGINIA SECRETARY OF STATE
MAC WARNER
ADMINISTRATIVE LAW DIVISION

eFILED
4/13/2021 10:29:00 AM
Office of West Virginia
Secretary Of State

NOTICE OF FINAL FILING AND ADOPTION OF A LEGISLATIVE RULE AUTHORIZED BY THE WEST VIRGINIA LEGISLATURE

AGENCY: Tax TITLE-SERIES: 110-13FF

RULE TYPE: Legislative Amendment to Existing Rule: No Repeal of existing rule: No

RULE NAME: TAX CREDIT FOR PROVIDING VEHICLES TO LOW-INCOME WORKERS

CITE STATUTORY AUTHORITY: W. Va. Code §11-10-5 and §11-13FF-5

The above rule has been authorized by the West Virginia Legislature.

Authorization is cited in (house or senate bill number) SB 160

Section W. Va. Code §64-7-6(b) Passed On 4/1/2021 12:00:00 AM

This rule is filed with the Secretary of State. This rule becomes effective on the following date:

April 13, 2021

This rule shall terminate and have no further force or effect from the following date:

August 01, 2026

BY CHOOSING 'YES', I ATTEST THAT THE PREVIOUS STATEMENT IS TRUE AND CORRECT.

Yes

Allen R Prunty – By my signature, I certify that I am the person authorized to file legislative rules, in accordance with West Virginia Code §29A-3-11 and §39A-3-2.

WEST VIRGINIA SECRETARY OF STATE
MAC WARNER
ADMINISTRATIVE LAW DIVISION

eFILED
4/13/2021 10:33:45 AM
Office of West Virginia
Secretary Of State

LEGISLATIVE

NOTICE OF FINAL FILING AND ADOPTION OF A LEGISLATIVE RULE AUTHORIZED BY THE WEST VIRGINIA LEGISLATURE

AGENCY: Tax TITLE-SERIES: 110-13GG

RULE TYPE: Legislative Amendment to Existing Rule: No Repeal of existing rule: No

RULE NAME: DOWNSTREAM NATURAL GAS MANUFACTURING INVESTMENT TAX CREDIT

CITE STATUTORY AUTHORITY: W. Va. Code §11-10-5 and W. VA. CODE §§11-13GG-5, 9, 16

The above rule has been authorized by the West Virginia Legislature.

Authorization is cited in (house or senate bill number) SB 160

Section W. Va. Code §64-7-6(c) Passed On 4/1/2021 12:00:00 AM

This rule is filed with the Secretary of State. This rule becomes effective on the following date:

April 13, 2021

This rule shall terminate and have no further force or effect from the following date:

August 01, 2026

BY CHOOSING 'YES', I ATTEST THAT THE PREVIOUS STATEMENT IS TRUE AND CORRECT.

Yes

Allen R Prunty – By my signature, I certify that I am the person authorized to file legislative rules, in accordance with West Virginia Code §29A-3-11 and §39A-3-2.

WEST VIRGINIA SECRETARY OF STATE
MAC WARNER
ADMINISTRATIVE LAW DIVISION

eFILED
4/13/2021 10:37:08 AM
Office of West Virginia
Secretary Of State

NOTICE OF FINAL FILING AND ADOPTION OF A LEGISLATIVE RULE AUTHORIZED BY THE WEST VIRGINIA LEGISLATURE

AGENCY: Tax TITLE-SERIES: 110-13II

RULE TYPE: Legislative Amendment to Existing Rule: No Repeal of existing rule: No

RULE NAME: HIGH-WAGE GROWTH BUSINESS TAX CREDIT

CITE STATUTORY AUTHORITY: W. Va. Code § 11-10-5 and § 11-13II-5

The above rule has been authorized by the West Virginia Legislature.

Authorization is cited in (house or senate bill number) SB 160

Section W. Va. Code §64-7-6(d) Passed On 4/1/2021 12:00:00 AM

This rule is filed with the Secretary of State. This rule becomes effective on the following date:

April 13, 2021

This rule shall terminate and have no further force or effect from the following date:

August 01, 2026

BY CHOOSING 'YES', I ATTEST THAT THE PREVIOUS STATEMENT IS TRUE AND CORRECT.

Yes

Allen R Prunty – By my signature, I certify that I am the person authorized to file legislative rules, in accordance with West Virginia Code §29A-3-11 and §39A-3-2.

Orders Report

Docket Number	Agency	Respondent	Date Rendered
2020-DB-0004D	Dentistry, WV Board of	Riad A. Hanna, DDS	4/9/2021
2020-DB-0023D	Dentistry, WV Board of	Helen D. Rymer, DDS	4/9/2021
21-1C-02011	Insurance Commission	Bedivere Insurance Company	4/9/2021
20-FINCON-02009	Insurance Commission	Maidstone Insurance Company	4/9/2021
20-76-W	Medicine, West Virginia Board Of	Jasbir Singh Makar, MD	4/6/2021
20-81-W	Medicine, West Virginia Board Of	Rohan Vipulkumar Shah, MD	4/6/2021
C-21-024	Real Estate Commission, West Virginia	Nancy Ann Furby	4/14/2021
C-21-024	Real Estate Commission, West Virginia	Alexandra Nicole Moran	4/14/2021

WEST VIRGINIA HEALTH CARE AUTHORITY
CERTIFICATE OF NEED
100 Dee Drive
Charleston, West Virginia 25311-1600

FILED
2021 APR 12 A 10: 15
OFFICE WEST VIRGINIA
SECRETARY OF STATE

OTHER

April 12, 2021

LEGAL NOTICE

The West Virginia Health Care Authority announces the following Certificate of Need activities for the week ending **April 9, 2021**.

LETTER OF INTENT RECEIVED

April 6, 2021 – Prestera Center for Mental Health Services, Inc., Huntington, Cabell County, CON File #21-2/3-12065-P, for the provision of primary care services at its Huntington and Charleston campuses; capital expenditure: $11,800.

APPLICATIONS FOR EXEMPTION RECEIVED

April 5, 2021 – University Physicians and Surgeons, Inc. d/b/a Marshall Health, Huntington, Cabell County, CON File #21-3-12064-X, for the development of an outpatient behavioral health center to be known as PROACT – Charleston.

April 8, 2021 – Crittenton Services, Inc., Wheeling, Ohio County, CON File #21-7-12066-X, for the expansion in Barbour County of behavioral health services provided by Wellspring Family Services.

HEARING NOTICE

The Administrative Hearing and Prehearing Conference have been SCHEDULED in the following matter:

April 8, 2021 - Pocahontas Memorial Hospital, Buckeye, Pocahontas County, CON File #21-4-12029-P, for the development of an ambulatory health care facility in Richwood, Nicholas County, providing primary care services and physical and occupational therapy services; capital expenditure: $75,000.

Prehearing Conference: **July 1, 2021 at 1:30 p.m.**
Administrative Hearing: **July 8, 2021 at 9:00 a.m.**

The prehearing conference and administrative hearing in the above-referenced matter will be held in the offices of the Health Care Authority, 100 Dee Drive, Charleston, West Virginia 25311-1600, unless otherwise noted.

HEARING ORDER ISSUED

April 8, 2021 - Pocahontas Memorial Hospital, Buckeye, Pocahontas County, CON File #21-4-12029-P, for the development of an ambulatory health care facility in Richwood, Nicholas County, providing primary care services and physical and occupational therapy services; capital expenditure: $75,000.

Further information may be obtained on any of the above-referenced projects by contacting Barbara Skeen, Director, Certificate of Need Division.

APR 09 2021
FILED
2021 APR 13 P 12: 12
OFFICE WEST VIRGINIA
SECRETARY OF STATE

OTHER

STATE OF WEST VIRGINIA
DEPARTMENT OF HEALTH AND HUMAN RESOURCES
WV Health Care Authority

Bill J. Crouch
Cabinet Secretary

Barbara Skeen
Interim Executive Director

In Re:

POCAHONTAS MEMORIAL HOSPITAL
CON File No. 21-4-12029-P

NOTICE OF PREHEARING CONFERENCE
AND ADMINISTRATIVE HEARING

PLEASE TAKE NOTICE that pursuant to Chapter 16, Article 2D, and to Chapter 29A, Article 5, of the West Virginia Code of 1931, as amended, that Barbara Skeen, Interim Executive Director of the West Virginia Health Care Authority, wishes to announce that the following proceedings have been scheduled for the above-noted application:

A PREHEARING CONFERENCE will be held, **July 1, 2021, at 1:30 p.m.**, in the Large Conference Room of the West Virginia Health Care Authority, 100 Dee Drive, Charleston, West Virginia.

AN ADMINISTRATIVE HEARING will be held, **July 8, 2021, at 9:00 a.m.**, in the Large Conference Room of the West Virginia Health Care Authority, 100 Dee Drive, Charleston, West Virginia.

This application concerns the development of an ambulatory health care facility in Richwood, West Virginia.

You and any other "affected persons" as defined by W. Va. Code §16-2D-2 wishing to participate in the hearing of this application are directed to be present at both the prehearing conference and the administrative hearing.

The purpose of the prehearing conference is to designate parties to the hearing, to designate the issues for the hearing, resolve any procedural matters, receive any motions, establish the order of proceedings, receive a listing of the witnesses and a summary of direct testimony that will be offered at the hearing, receive a listing of evidence to be offered and copies of any documents to be offered such as reports or analysis prepared by expert witnesses including any financial reports and any other procedural matters. The prehearing conference will be conducted in conformance to Rule 16, West Virginia Rules of Civil Procedure for pretrial conferences.

In a hearing, any person has the right to be present or to be represented by counsel and to present oral or written arguments and relevant evidence. Any person affected by the matter which is the subject of the hearing may conduct reasonable questioning of persons who make factual allegations relevant to such matters.

PLEASE TAKE NOTICE that if the party who requested the hearing withdraws that request, then the hearing will be canceled.

The file on this application is available for examination in the offices of the Health Care Authority from 8:30 a.m. to 12:00 p.m., Monday through Friday. If you have questions concerning this matter, please contact Barbara Skeen, Interim Executive Director, at (304) 558-7000.

Date: April 8, 2021

Barbara Skeen
Barbara Skeen, Interim Executive Director

WEST VIRGINIA
HEALTH CARE AUTHORITY

FILED

2021 APR 13 P 12: 12

OFFICE WEST VIRGINIA
SECRETARY OF STATE

OTHER

In Re: **POCAHONTAS MEMORIAL HOSPITAL**
CON File # 21-4-12029-P

HEARING ORDER

The following shall apply to and govern the above-captioned action and activities conducted in connection with it. In the absence of a specific date or deadline for a given activity, it is anticipated that such activity will be scheduled and conducted within a reasonable time prior to the hearing.

The parties may not amend, modify or adjust any provision of this order except by leave of the Authority.

1. Hearing date: **July 8, 2021, at 9:00 a.m.**

2. Prehearing conference date: **July 1, 2021, at 1:30 p.m.**

3. Settlement conference (optional): **N/A**

4. All replacement pages to CON application to be filed by: **April 30, 2021**
   Pursuant to W. Va. Code St. R. §65-32-6, if the applicant submits a substantial amendment to the application the Authority may withdraw the application from review. The board may examine the extent of additional information or any amendment made by the applicant to the application and its impact on the new institutional health service, and determine the application to be a new proposal subject to a new review cycle.

5. Motions for discovery to be filed by: **May 10, 2021**

6. Discovery completed on or before: **June 11, 2021**
   Parties engaging in discovery are required to file a copy of the certificate of service attached to the discovery request or response with the board. Affected parties shall not file copies of the actual discovery and responses with the board. To the extent that an affected party intends to introduce a document obtained through the discovery process at the administrative hearing, the document and two (2) copies must be filed at the prehearing conference.

7. Dispositive and preliminary motions to be filed by: **June 24, 2021**
   Parties shall file all prehearing motions with the board a minimum of three (3) days prior to the prehearing conference.

8. All requests for subpoenas and/or subpoenas duces tecum to be filed by: **June 24, 2021**

Entered this 8th day of April, 2021.

OTHER

B. Allen Campbell
Senior Assistant Attorney General
Counsel for the West Virginia Health Care Authority

THE WEST VIRGINIA DEPARTMENT OF TRANSPORTATION
DIVISION OF HIGHWAYS
CHARLESTON, WEST VIRGINIA

ABSTRACT FROM THE RECORDS OF THE COMMISSIONER'S ORDERS

DATED

April 9, 2021

FILED
2021 APR -9 P 4: 08
OFFICE WEST VIRGINIA
SECRETARY OF STATE

WHEREAS, Chapter 17, Article 2A, Section 4, of the Official Code of West Virginia, 1931, as amended, authorizes the Commissioner of Highways to be in charge of the selection and the effective organization of all West Virginia Division of Highways personnel; and

WHEREAS, Chapter 17, Article 2A, Section 8, of the Official Code of West Virginia, 1931, as amended, authorizes the Commissioner of Highways to promulgate rules for the efficient administration of the State road program; and

WHEREAS, to provide for the proper and efficient transaction of business within the West Virginia Division of Highways, certain revisions to the present organizational structure are necessary and prudent;

NOW, THEREFORE, BE IT ORDERED that the Commissioner's Order, dated February 1, 2021 implementing the Organization Chart of the same date, pertaining to the organizational structure of the Division of Highways, be amended; and

BE IT FURTHER ORDERED that the attached West Virginia Division of Highways Organization Chart, dated April 9, 2021 supersedes all previous organization charts and is hereby established and will take effect April 9, 2021.

THE WEST VIRGINIA DEPARTMENT OF TRANSPORTATION
DIVISION OF HIGHWAYS
CHARLESTON, WEST VIRGINIA

ABSTRACT FROM THE RECORDS OF THE
COMMISSIONER'S ORDERS
PAGE TWO

All provisions of this ORDER will become effective upon entry.

Entered this 9th day of April 2021

Byrd E. White, III
Secretary of Transportation/
Commissioner of Highways

Attachment

Distribution:

Administrative Staff
Division Directors
District Engineers/Managers
Office of the Governor
Department of Administration
West Virginia State Auditor
Secretary of State
Federal Highway Administration

STATE OF WEST VIRGINIA
WEST VIRGINIA DEPARTMENT OF TRANSPORTATION
DIVISION OF HIGHWAYS

Given under my hand and seal of the West Virginia Division of Highways, I do hereby certify that the foregoing is a true abstract from the Orders of the West Virginia Commissioner of Highways, entered of record this 9th day of April 2021.

Division of Highways

OTHER

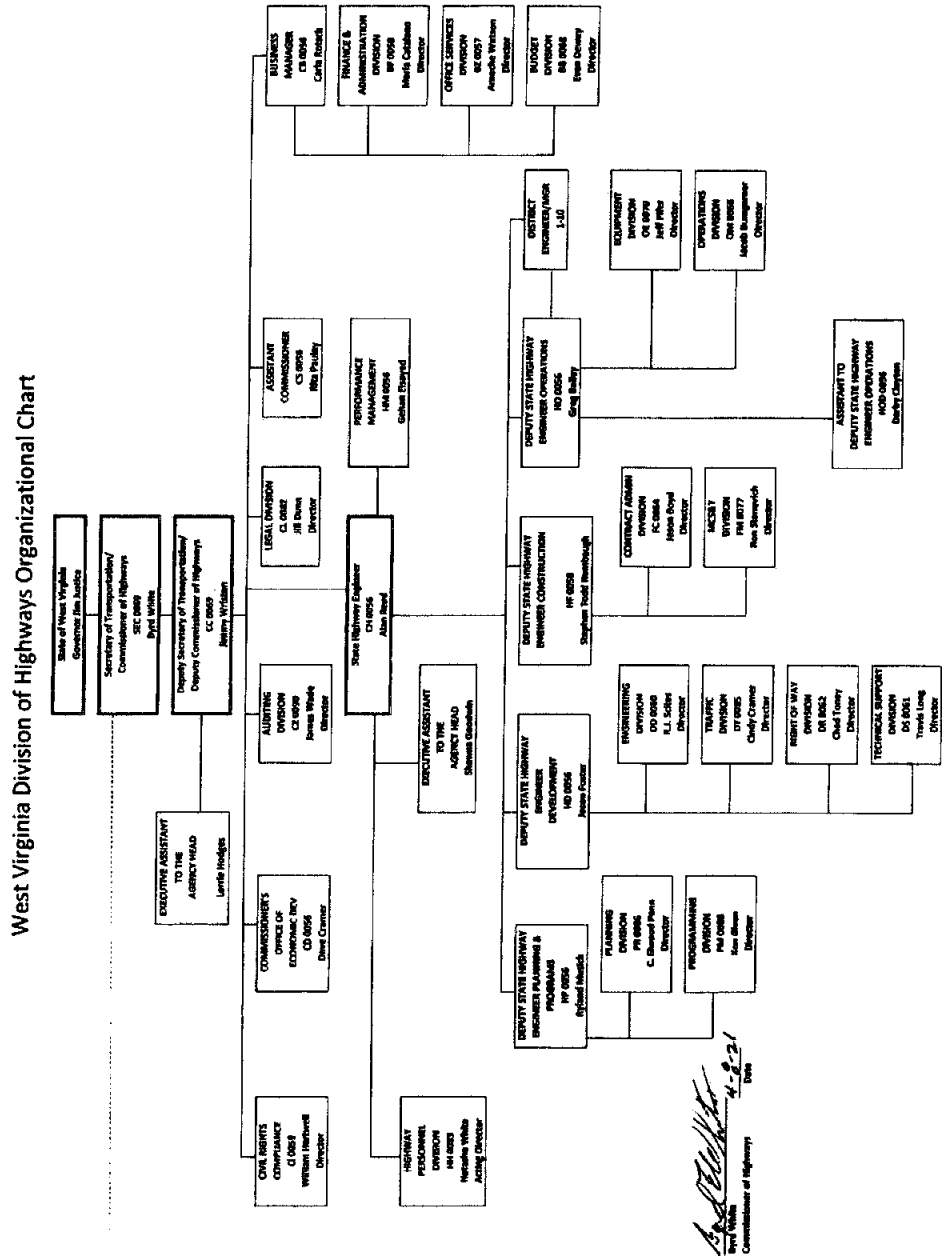

THE WEST VIRGINIA DEPARTMENT OF TRANSPORTATION
CHARLESTON, WEST VIRGINIA

ABSTRACT FROM THE RECORDS OF THE SECRETARY'S ORDERS

DATED

April 9, 2021

FILED
2021 APR -9 P 4:08
OFFICE WEST VIRGINIA
SECRETARY OF STATE

OTHER

WHEREAS, Chapter 5F, Article 2, Section 2, of the Official Code of West Virginia, 1931, as amended, authorizes the Secretary of the Department of Transportation to employ persons, consolidate positions, assign duties and name persons to fill more than one position; and

WHEREAS, the aforementioned Section of the Code further authorizes the Secretary to reorganize internal functions or operations; and

WHEREAS, the aforementioned Section of the Code further authorizes the Secretary to delegate duties to or among employees; and

WHEREAS, the aforementioned Section requires the efficient, effective and economical operation of the Department of Transportation; and

WHEREAS, to promote maximum efficient and effectiveness in carrying out the duties and responsibilities for the full range of transportation services desired by the citizens of West Virginia, and her visitors, by the Department of Transportation, it is necessary and proper to organize the Office of the Secretary of the Department of Transportation and the Division of Highways in the most effective means possible;

NOW, THEREFORE, BE IT RESOLVED that all previous Secretary's Orders, Commissioner's Orders and Organization Charts pertaining to the organization structure of the Office of the Secretary and the Division of Highways be amended; and

BE IT FURTHER ORDERED that the organizational structure and personnel assignments and duties shown on the attached Department of Transportation Organization Chart dated April 9, 2021, are hereby established and will take effect immediately.

THE WEST VIRGINIA DEPARTMENT OF TRANSPORTATION
CHARLESTON, WEST VIRGINIA

ABSTRACT FROM THE RECORDS OF THE SECRETARY'S ORDERS
PAGE TWO

All provisions of this ORDER will become effective upon entry.

Entered this 9th day of April 2021.

Byrd E. White, III
Secretary of Transportation

Attachment

Distribution

Administrative Staff
Division of Motor Vehicles
Aeronautics Commission
State Rail Authority
Division of Public Transit
WV Parkways Authority
Office of Administrative Hearings
Office of the Governor
Department of Administration
West Virginia State Auditor
Secretary of State
Federal Highway Administration

STATE OF WEST VIRGINIA
WEST VIRGINIA DEPARTMENT OF TRANSPORTATION

Given under my hand and seal of the Department of Transportation, I do hereby certify that the foregoing is a true abstract from the Orders of the West Virginia Secretary of Transportation, entered of record this 9th day of April 2021.

Department of Transportation

West Virginia Department of Transportation
Organizational Chart

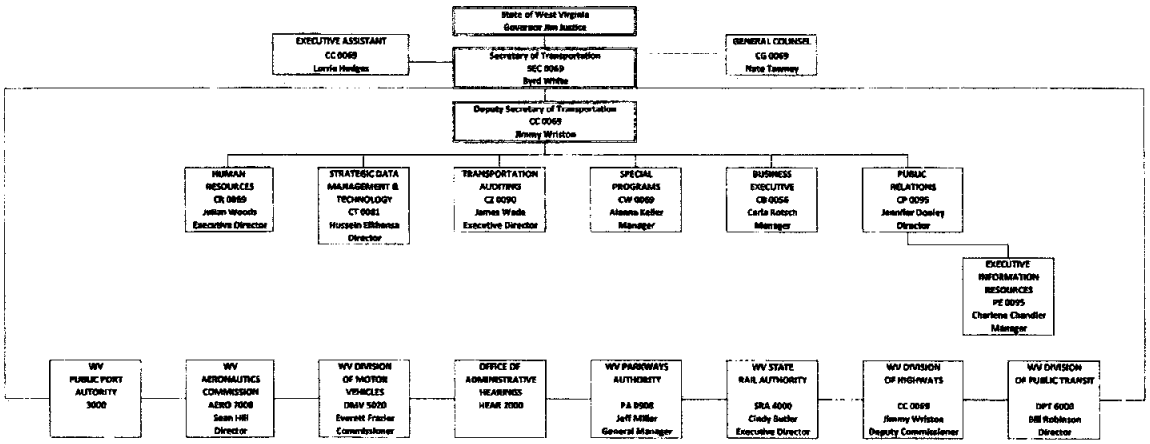

Byrd E White 4-9-21

Byrd White
Secretary of Transportation

Date

OTHER