WEST VIRGINIA
SECRETARY OF STATE
KEN HECHLER
ADMINISTRATIVE LAW DIVISION

Form #3

Do Not Mark In This Box

OFFICE OF WEST VIRGINIA SECRETARY OF STATE AUG 29 4 PM '00

OFFICE OF WEST VIRGINIA SECRETARY OF STATE

NOTICE OF AGENCY APPROVAL OF A PROPOSED RULE AND FILING WITH THE LEGISLATIVE RULE-MAKING REVIEW COMMITTEE

AGENCY: Division Environmental Protection-Office of Air Quality TITLE NUMBER: 45

CITE AUTHORITY: WV Code §22-5-1 et seq.

AMENDMENT TO AN EXISTING RULE: YES X NO ___

IF YES, SERIES NUMBER OF RULE BEING AMENDED: 34

TITLE OF RULE BEING AMENDED: "Emission Standards for Hazardous Air Pollutants for Source Categories Pursuant to 40 CFR Part 63""

IF NO, SERIES NUMBER OF RULE BEING PROPOSED: ___

TITLE OF RULE BEING PROPOSED: ___

THE ABOVE PROPOSED LEGISLATIVE RULE HAVING GONE TO A PUBLIC HEARING OR A PUBLIC COMMENT PERIOD IS HEREBY APPROVED BY THE PROMULGATING AGENCY FOR FILING WITH THE SECRETARY OF STATE AND THE LEGISLATIVE RULE-MAKING REVIEW COMMITTEE FOR THEIR REVIEW.

Carrie J. Chambers

Authorized Signature

FILED

AUG 29 3 24 PM '00

OFFICE OF WEST VIRGINIA SECRETARY OF STATE

$4.80 w/out fed. regulations
$200.00 with fed. regulations

Executive Office
#10 McJunkin Road
Nitro, WV 25143-2506
Telephone No: (304)759-0575
Fax No: (304)759-0526

West Virginia Bureau of Environment

Cecil H. Underwood
Governor

Michael C. Castle
Commissioner

August 23, 2000

Ms. Judy Cooper
Director, Administrative Law
Division
Secretary of State's Office
Capitol Complex
Charleston, WV 25305

RE: 45CSR34 - "Emission Standards for Hazardous Air Pollutants for Source Categories Pursuant to 40 CFR Part 63"

Dear Ms. Cooper:

This letter will serve as my approval to file with your Office the above-referenced Legislative rule as "Notice of Agency Approval of a Proposed Rule and Filing with the Legislative Rule-Making Review Committee."

Your cooperation in the above request is very much appreciated. If you should have any questions or require additional information, please call Carrie Chambers in my Office at 759-0515.

Sincerely,

Michael C. Castle
Commissioner

MCC:cc

cc: Karen Watson
Carrie Chambers

Questionnaire

DATE: September 1, 2000

TO: LEGISLATIVE RULE-MAKING REVIEW COMMITTEE

FROM: (AGENCY NAME, ADDRESS & PHONE NUMBER) Division of Environmental Protection
Office of Air Quality
7012 MacCorkle Avenue, SE
Charleston, WV 25304
Phone: (304) 926-3647

LEGISLATIVE RULE TITLE: 45CSR34 - "Emission Standards for Hazardous Air Pollutants for Source Categories Pursuant to 40 CFR Part 63"

1. Authorizing statute (s) citation: W.Va. Code §§ 22-5-1 et seq.

2. a. Date filed in State Register with Notice of Hearing or Public Comment Period:
July 12, 2000 and August 9, 2000

b. What other notice, including advertising, did you give of the hearing?

I. Class I legal advertisement, *Charleston Daily Mail & Charleston Gazette*
II. Sent a copy of the Public Notice to our agency mailing list.
III. Public Notice placed on agency's Web site:
http://www.dep.state.wv.us/oaq/

IV. Press Releases

c. Date of Public Hearing (s) or Public Comment Period ended:

Public Hearing -- August 14, 2000

Public Comment Period ended -- August 21, 2000

d. Attach list of persons who appeared at hearing, comments received, amendments, reasons for amendments.

Attached_____ No comments received_____X_____

e. Date you filed in State Register the agency approved proposed Legislative Rule following public hearing: (Be exact)

August 29, 2000

f. Name, title, address and phone/fax/e-mail numbers of agency person(s) to receive all written correspondence regarding this rule: (Please type)

Edward L. Kropp, Chief	Carrie Chambers, Executive Assistant
7012 MacCorkle Ave., SE	10 McJunkin Road
Charleston, WV 25304	Nitro, WV 25143-2506
Phone: (304) 926-3647	(304) 759-0515
Fax: (304) 926-3637	(304) 759-0526
E-Mail: skropp@mail.dep.state.wv.us	Cchambers@mail.dep.state.wv.us

g. **IF DIFFERENT from item 'f',** please give Name, title, address and phone number (s) of agency person(s) who wrote and/or has responsibility for the contents of this rule: (Please type)

See "f" above

3. If the statute under which you promulgated the submitted rules requires certain findings and determinations to be made as a condition precedent to their promulgation:

a. Give the date upon which you filed in the State Register a notice of the time and place of a hearing for the taking of evidence and a general description of the issues to be decided.

N/A

b. Date of hearing or comment period:

N/A

c. On what date did you file in the State Register the findings and determinations required together with the reasons therefor?

N/A

d. Attach findings and determinations and reasons:

Attached N/A

BUREAU OF ENVIRONMENT
DIVISION OF ENVIRONMENTAL PROTECTION

BRIEFING DOCUMENT

Rule Title: 45CSR34 - "Emission Standards for Hazardous Air Pollutants For Source Categories Pursuant to 40 CFR Part 63"

A. AUTHORITY: W.Va. Code §§22-5-1 et seq.

B. SUMMARY OF RULE:

The current version of 45CSR34 provides authority for the Director to determine and enforce case-by-case maximum achievable control technology (MACT) standards for major hazardous air pollutant sources in the absence of a federal standard under certain circumstances as required for permit program approval under Title V of the federal Clean Air Act as amended (CAA). The proposed rule will, however, delete the requirement for case-by-case MACT for sources which modify in accordance with the current federal regulations implementing 112(g) of the CAA.

The rule also establishes general provisions for emission standards for hazardous air pollutants (NESHAP) and other regulatory requirements pursuant to section 112 of the CAA. The rule codifies general procedures and criteria to implement emission standards for stationary sources that emit (or have the potential to emit) one or more of the hazardous air pollutants (HAP) in or pursuant to section 112(b) of the CAA. This revised rule incorporates by reference additional provisions relating to primary lead smelting, Group I and Group IV polymers and resins, phosphoric acid manufacturing and phosphate fertilizers production, wool fiberglass manufacturing, Portland cement manufacturing, oil production, natural gas production, transmission, and storage, hydrochloric acid process steel pickling facilities and regeneration plants, pesticide active ingredient production, Generic Maximum Achievable Control Technology (MACT), constructed or reconstructed major sources, halogenated solvent cleaning, off-site waste and recovery operations, publicly owned treatment works, ethylene oxide commercial sterilization and fumigation operations, amino/phenolic resins production, secondary aluminum production, synthetic organic chemical manufacturing industry, epoxy resins production and non-nylon polyamides production, and petroleum refineries.

Subpart EEE (hazardous waste combustors) which was previously incorporated by 45CSR25, is no longer excluded from this rule because the Director has decided to include all federal regulations codified at 40 CFR Part 63 in this rule, even where a source is subject to requirements in other rules or programs. In the case of hazardous waste

combustors, these facilities will be subject to the requirements of 45CSR25, which is the implementing rule for the federal Resource Conservation and Recovery Act (RCRA), in addition to the requirements under the CAA at 40 CFR Part 63.

C. STATEMENT OF CIRCUMSTANCES WHICH REQUIRE RULE:

This rule, in conjunction with existing rule 45CSR15, establishes general provisions for emission standards for hazardous air pollutants and other regulatory requirements promulgated by the U.S. Environmental Protection Agency (USEPA) as of July 10, 2000, pursuant to section 112 of the CAA. This rule codifies general procedures and emission standards for certain stationary sources that emit (or have the potential to emit) one or more of the substances listed as hazardous air pollutants in section 112(b) of the CAA. 45CSR34 incorporates hazardous air pollutant standards codified by USEPA under 40 CFR Part 63, whereas the earlier existing rule for hazardous air pollutants, 45CSR15, primarily incorporates hazardous air pollutant standards promulgated by USEPA under 40 CFR Part 61 prior to amendment of the CAA. The Director intends to incorporate the additional federal counterpart rules by reference. Promulgation of this rule by the Legislature is necessary for the State to fulfill its responsibilities under the CAA.

D. FEDERAL COUNTERPART REGULATIONS - INCORPORATION BY REFERENCE/DETERMINATION OF STRINGENCY:

A federal counterpart to this proposed rule exists. In accordance with the Director's recommendation, and with limited exception, the Office of Air Quality proposes that the rule incorporate by reference the federal counterparts.

Because the proposed rule incorporates by reference the federal counterpart, no determination of stringency is required.

E. CONSTITUTIONAL TAKINGS DETERMINATION:

In accordance with §22-1A-1 and 3(c,) the Director has determined that this rule will not result in taking of private property within the meaning of the Constitutions of West Virginia and the United States of America.

F. CONSULTATION WITH THE ENVIRONMENTAL PROTECTION ADVISORY COUNCIL:

At its July 6, 2000 meeting, the Environmental Protection Advisory Council reviewed and discussed this rule. Their comments are contained in the attached minutes.

MINUTES

ENVIRONMENTAL PROTECTION ADVISORY COUNCIL

July 6, 2000, Director's Conference Room, Nitro

The twenty-first meeting of the DEP Advisory Council was held Thursday, July 6, 2000, in the Director's Second Floor Conference Room located in Nitro. Chairman Mike Castle called the meeting to order at 10:00 a.m.

ATTENDING:

Advisory Council Members:

Mike Castle, Chairman
Lisa Dooley
Jacqueline Hallinan
Bill Raney
Rick Roberts
Bill Samples

Environmental Protection:

Greg Adolfson	Ava King
John Ailes	Brian Long
John Benedict	Pam Nixon
Al Blankenship	Rocky Parsons
Carrie Chambers	Jennifer Pauer
Dick Cooke	Cap Smith
Mike Dorsey	Randy Sovic
Andy Gallagher	Charlie Sturey
Randy Huffman	Darcy White
John Johnston	

1) **Review and Approval of April 6, 2000 Minutes.** The April 6 Minutes were approved with note of two minor revisions.

2) **Discussion of Proposed Rule Amendments - 2001 Legislative Session.** In accordance with WV Code §22-1-1(c), and DEP's rule-making procedure policy that was implemented in 1998, and included involving DEP's Advisory Council in DEP's rule-making process as early as possible to enable the Council to review, comment, and make recommendations to the Director on the proposed Legislative rules before they are filed for public

hearing, the following proposed rules were brought to the Council's attention.

John Benedict, Deputy Chief of the Office of Air Quality (OAQ), reviewed the following OAQ rules:

- **45CSR1 - "NO_x Budget Trading Program as a Means of Control and Reduction of Nitrogen Oxides"**
- **45CSR6 - "To Prevent and Control Air Pollution From Combustion of Refuse"**
- **45CSR15 - "Emission Standards for Hazardous Air Pollutants Pursuant to 40 CFR Part 61"**
- **45CSR16 - "Standards of Performance for New Stationary Sources Pursuant to 40 CFR part 60"**
- **45CSR23 - "To Prevent and Control Emissions From Municipal Solid Waste Authorities"**
- **45CSR25 - "To Prevent and Control Air Pollution From Hazardous Waste Treatment, Storage, or Disposal Facilities"**
- **45CSR30 - "Requirements for Operating Permits"**
- **45CSR34 - "Emission Standards for Hazardous Air Pollutants for Source Categories Pursuant to 40 CFR Part 63"**

In discussion of **45CSR1**, John explained to the Council that they did not have the companion rule (which is 45CSR26) to this proposed rule amendment, but Council will be provided a copy of the proposed rule when the draft is complete. Both rules have been drafted as a response to EPA's NO_x SIP Call. Failure of states to respond to the SIP Call will result in a NO_x federal implementation plan or federal program to reduce NO_x emissions under Section 126 of the CAA. John explained that OAQ is late in drafting both rules because they were waiting until several issues were settled in federal court. EPA is now requiring, and the federal courts concurred, that states develop rules and meet the conditions of the SIP Call by October 28, 2000. EPA's SIP Call affects major utility sources, cement kilns, and large industrial-type boilers (those exceeding 250 lbs/mmBtu). The SIP Call originally included internal combustion engines.

45CSR1 establishes standards specifically for non-utility boilers, and follows EPA's model rule that states are to use in developing their SIPS. The model rule incorporates standards to

allow sources to trade emissions between states. Therefore, states do not have a lot of flexibility to adjust their state-specific rules, if they want their sources to participate in a national NO_x budget-trading program.

John informed the Council that **45CSR15** adopts by reference the new federal provisions for emission standards for hazardous air pollutants (NESHAPS), and other regulatory requirements as outlined in 40 CFR Part 61, as of June 1, 2000. This also applies to **45CSR16,** which specifically includes associated reference methods, performance specifications, other test methods, and a minor correction to the reporting requirements for industrial-commercial-institutional steam generating units.

45CSR6 prevents and controls particulate matter air pollution from the combustion of refuse by the prohibition of open burning. This proposed rule also establishes weight and visible emission standards for incinerators and incineration, and is part of the West Virginia State Implementation Plan (SIP) approved by EPA. The rule does not prohibit bonfires, campfires, or other forms of open burning for the purposes of personal enjoyment and comfort, but establishes standards for open burning. The proposed revisions are intended to exempt certain flares and flare stacks from the requirement to obtain a permit under 45CSR13.

45CSR23 - This rule was first promulgated approximately three years ago, and for the most part adopts new federal standards by reference. There is a specific plan that each state puts together for "existing sources" that OAQ has done for previous rule versions, and the plan for West Virginia has been approved by EPA.

45CSR25 - This rule establishes a program of air quality regulation over the treatment, storage, and disposal of hazardous wastes. John informed Council that this proposed rule amendment is incorporating additional federal requirements promulgated by EPA, as of June 1, 2000. There is a shift from the Resource Conservation and Recovery Act (RCRA) requirements into the Clean Air Act (CAA) programs that OAQ operates. Many of the RCRA provisions previously contained in this rule are now being shifted to 45CSR34 (which will be discussed later in the meeting). John said this proposed rule amendment is also necessary to maintain consistency with the Office of Waste Management's current rule - 33CSR20.

45CSR26 (copy not provided for Council at this time) specifically addresses NO_x reduction requirements for electric generating units. This rule deviates somewhat from EPA's model rule, but follows the Governor's Coalition proposal. EPA's model rule requires electric generating units .15 lb/mmBtu NO_x limits,

which is roughly an 85% reduction in NO_x emissions. Whereas, the Governor's coalition proposal requires .25 lb/mmBtu NO_x limits, or 65% reduction from their 1999 emissions.

45CSR30 establishes a comprehensive air quality operating permits program consistent with the requirements of Title V of the federal Clean Air Act and 40 CFR Part 70. These proposed amendments will incorporate various corrections and revisions associated with the November 1995 Federal Register Notice. John said OAQ has deferred making these changes until now in anticipation of additional changes they believe EPA will make in Part 70. There also has not been a great deal of concern since OAQ has received interim approval of the program since 1994; however, EPA was recently sued for issuing these interim approvals. This put OAQ in the position of amending the rule to comply with the November 1995 requirements, so that OAQ can receive final approval from EPA. John said the rule may need to be modified again in the near future when (and if) EPA modifies the Part 70 requirements.

45CSR34 - This rule provides authority for the Director to determine and enforce case-by-case maximum achievable control technology (MACT) standards for major hazardous air pollutant sources, in the absence of a federal standard under certain circumstances, as required for permit program approval under Title V of the CAA. John said this proposed amendment does delete the requirement that OAQ do a case-by-case MACT analysis for sources that modify. He said this is a fairly significant change in the rule. Previously, and even under OAQ's Title V program, sources that do even slight modifications and were to eventually receive a MACT standard from EPA, were required to make some kind of guess as to what that standard was under such modification, and then do a case-by-case analysis to make that source comply with what everybody thought would be the ultimate MACT standard for that source. EPA was sued over this particular requirement, and has since removed the requirement from the Title V program. As mentioned earlier in the meeting, OAQ is also proposing incorporating the provisions in 45CSR25, pertaining to hazardous waste combustors, into this rule.

After discussions and questions concerning OAQ's proposed rules, Council recommended the following to Chairman Castle:

Bill Raney deferred to Ray Joseph, representing the natural gas industry, for questions concerning Section 6 of 45CSR6 (To Prevent and Control Air Pollution From Combustion on Refuse) requirements for Permits before the installation and use of emergency flares. The concern from Mr. Joseph was that in certain situations emergency flares would exceed permitting trigger levels requiring a permit pursuant to 45CSR13. John Benedict concurred that permits would be required under those

circumstances. However, that should not be that much of a burden since the emissions from a majority (90%) of emergency flares used in the natural gas industry would be below permit trigger levels. It was noted that Section 6 was specifically revised to allow the use of emergency flares for the natural gas industry, and that others in OAQ were more directly involved in drafting the specific language in Section 6. Mr. Benedict recommended that proposed rule 45CSR6 go to public notice as drafted, and that the OAQ would meet with representatives of the natural gas industry to further discuss their concerns, and possibly consider revisions in Section 6.

Bill Raney asked if the Administrative Procedures Act requires Fiscal Notes to be completed as to the implications of the rule on the regulated community. Carrie Chambers advised Mr. Raney that fiscal notes are prepared for each rule before they are filed for public hearing, but the fiscal note requires information on the cost to the state in implementing the proposed rules, not on the regulated community. The Fiscal Notes are a work-in-progress, and will be submitted to Council after they are completed. Mr. Raney expressed his concern by stating that he has a problem in approving the proposed rules without the Council reviewing these documents beforehand. He said agencies have typically been known to crank out the standard responses to the fiscal notes, which leads to problems during the Legislative Rule-Making process. Bill Samples said he wasn't sure if the Council has a right to approve or disapprove the proposed rules, but only that the Director is to consult with Council on the proposed amendments, and then consider their comments. Mr. Raney stated that he would still like his concerns noted and included in the minutes that will be filed with the proposed rules.

Mr. Raney said he would also like to ask why there is nothing on the agenda concerning the Environmental Quality Board's (EQB) Water Quality Standards rule. Carrie Chambers explained that she has included a copy of EQB's rule (and also three of the Solid Waste Management Board's proposed rules), for Council's review, in the notebooks containing DEP's rules. She went on to explain that since the Boards have their own rule-making authority under §22B-3-4, they are not required to go before the Advisory Council during the rule-making process.

Mr. Raney said that DEP has a huge obligation in regards to water quality standards, regardless of who has the rule-making authority. He also said that the rules as proposed are huge, and the implications to the regulated community are immense.

Chairman Castle said he would try to find someone from OWR or EQB to discuss EQB's rule later in the meeting.

- **60CSR4 - "Awarding of West Virginia Stream Partners' Program Grant Rule."**

Jennifer Pauer, Program Coordinator for the Stream Partners' Program, briefed Council members on the proposed amendments to **60CSR4.** Jennifer said this rule was filed as an emergency rule in March. After one year of implementing the rule, it was discovered that the rigid spending caps contained in the original rule made it difficult to implement as intended by §20-13-4. The proposed amendments will loosen these spending caps, and therefore make it easier for grant recipients to complete their watershed improvement projects. The rule also contains minor technical cleanup.

After discussion and questions from the Council, there were no substantive recommendations made to the Director concerning the proposed amendments to 60CSR4.

- **199CSR1 - "Surface Mining Blasting Rule"**

Darcy White, Office of Explosives and Blasting (OEB), briefed Council on 199CSR1. Darcy explained that many of the proposed amendments to the Surface Mining Blasting rule are technical cleanup in nature and also involve changing the order of some provisions to improve clarity. Sections covering inspections and enforcement and appeals were extracted from portions of existing 38CSR2, the Surface Mining and Reclamation rule. These sections are being amended into the current rule to ensure OEB has authority to enforce a program that will satisfy OSM requirements. Another section extracted from 38CSR2 deals with pre-blast survey requirements, and is necessary if OEB is to gain OSM approval of the proposed rules. Darcy said that subsection 3.11 also contains a proposed revision that allows the Director to further restrict blasting on a case-by-case basis as an alternative to prohibiting blasting altogether. To correspond with the blaster's certification rules approved by OSM, and to help improve certified blaster's professionalism and knowledge, the requirements for blaster's certification is also being proposed as an amendment to this rule.

Larry Harris, Advisory Council member, was unable to attend the meeting; however, he expressed the following comments on 199CSR1 by e-mail. He asked whether these blasting rules will also apply to the quarry bill and rules. He said that in the Surface Mining Blasting rule there seems to be some consideration of the premining groundwater/wells. This presumes that any

taking of this water right from nearby landowners is cause for a claim. Is this also true for limestone quarries?

Darcy responded by saying that no, 199CSR1 applies only to coal mining. Blasting requirements for quarries are addressed in §22-4 (revised during the past legislative session, and effective this July). Rocky Parsons is currently working on a rules package as required by this legislation. Until those are promulgated, there is no change in blasting requirements for quarries.

After discussion and questions from the Council, there were no recommendations made to the Director concerning the proposed amendments to 199CSR1.

John Johnston, Chief of the Office of Oil and Gas, discussed the following proposed rules.

- **35CSR4 - "Oil and Gas Wells and Other Wells"**

- **35CSR7 - "Certification of Gas Wells"**

John told Council that there are three proposed amendments to 35CSR4 and one to 35CSR7 that are both fairly straightforward. He said the proposed amendments in **35CSR4** will: 1) allow the plats to be submitted electronically. This is the first step in relation to authorizing permitting electronically for oil and gas wells; 2) will apply to the procedure for well transfer. These proposed amendments will eliminate the pre-circular, and cut the paperwork and mailing in half that the Office of Oil and Gas must perform in the transfer process. This will also allow the transfer of well responsibility to occur in a more timely manner; and 3) will waive the new certification for the reuse of plats when applying for plugging permits.

35CSR7 - The Federal Energy Regulatory Commission is proposing to reinstate certain regulations regarding well category determination under the Natural Gas Policy Act of 1978, Section 503. This section allows natural gas producers to obtain tax credits under Section 29 of the Interval Revenue Code. Section 503 first requires a determination by the local regulatory agency that a well is producing one of the types of gas eligible for the Section 29 tax credit. The promulgation of these proposed rules will enable the Office of Oil and Gas to review and conduct the first determination.

After discussion and questions from the Council, there were no substantive recommendations made to the Director concerning the proposed amendments to 35CSR4 and 35CSR7.

The following Office of Waste Management rules were discussed:

- **33CSR3 - "Yard Waste Management Rule"**
- **33CSR5 - "Waste Tire Management Rule"**
- **33CSR20 - "Hazardous Waste Management Rule"**
- **33CSR32 - "Underground Storage Tank Insurance Fund"**

Dick Cooke, Assistant Chief, Office Waste Management (OWM), briefed Council on **33CSR3**. He said OWM has taken a policy statement, that with a change in the yard waste laws approximately two years ago, provided for the Director to provide for reasonable and necessary exceptions to the prohibition of yard waste in landfills. This provision was not incorporated into the rule as the Legislature intended at that time. This proposed amendment incorporates that exception into the rule, and will allow West Virginia residents to dispose of small quantities of domestic yard waste in solid waste landfills, where there is no other option available.

Dick Cooke explained to Council that SB 427 (the Tire Bill) mandated that emergency rules be promulgated under **33CSR5**. The proposed emergency rule, among other amendments, will allow the disposal of waste tires in solid waste landfills, but only when the state agency authorizing the remediation or cleanup program has determined there is no reasonable alternative available. The proposed amendments also adds permitting or other requirements for salvage yards, waste tire dealers, waste tire transporters, and commercial landfill facilities.

Mike Dorsey, Assistant Chief, OWM, next discussed **33CSR20**. He explained the rule is being amended to adopt by federal reference the 1999 changes made to 40 CFR Parts 260 through 279. Those amendments include Hazardous Waste Management System: Modification of the Hazardous Waste Program, Hazardous Waste Lamps, and 180-day Accumulation Time Under RCRA for Waste Water Treatment Sludges from the Metal Finishing Industry. These amendments are less stringent than federal regulations and are intended to assist the regulated community, and encourage recycling and waste minimization.

Mike said OWM has two rule amendments this year that deal with underground storage tanks. The first, **33CSR30**, applies to a very small segment of the population. This rule, as well as federal EPA requirements, requires that all underground storage tanks (UST) have corrosion protection by December 22, 1998. Many UST

systems were upgraded to meet the standards rather than new USTs being installed; however, the UST inspectors are finding that many of the systems were not installed correctly. Since the current rules do not specifically require certification of persons who install corrosion protection, the burden falls solely on the UST owners and/or operators to correct the system. This proposed amendment should prevent this from continuing in the future.

33CSR32, OWM's final proposed rule, deals with the Underground Storage Tank Insurance Fund. This rule requires that accrued interest on the UST Insurance Trust Fund Capitalization Fund remain in that fund. The UST Administrative Fund has been depleted, and the annual registration fee assessment no longer generates enough revenue to support the UST program. The expenditures from the UST Administrative Fund are used as the required match for the federal grant. Unless more revenue is deposited in the UST Administrative Fund, there will be insufficient funds to pay personnel and other operating costs. The proposed amendments to this rule will allow the transfer of the interest money and alleviate the need to increase the annual registration fees. Mike said this amendment has the full support of the UST Advisory Committee.

After discussion of OWM's proposed rules, the following amendment to 33CSR5 (the Waste Tire Disposal rule) was offered by Counsel:

Bill Samples said that section 3.1.a indicates that a permit is required for persons who generate waste tires, but he couldn't find a definition of "generator," and this could be confusing when trying to interpret the rule. Cap Smith, Chief of OWM, said that is a very good point, and it will certainly be taken into consideration during the public hearing/comment period timeframe.

The following Office of Mining and Reclamation rules were discussed:

- **38CSR2 - "WV Surface Mining Reclamation Rule"**
- **38CSR3 - "Rules for Quarrying and Reclamation"**

John Ailes, Assistant Chief, OMR, briefly described the proposed amendments to **38CSR2**, and noted that most of the amendments deal with Office of Surface Mining program amendments.

After discussion/questions concerning 38CSR2, the following comments were made by Council:

In Section 14.15.f, OMR is proposing to tie contemporaneous reclamation to reclamation liability. The proposed amendment stated that the reclamation liability cannot exceed the bond posted for the site. Bill Raney stated his concern with limiting the area to be disturbed based upon liability. He questioned who would be determining reclamation liability, and how. He said that he understands the reasoning, but would like to go on record as being "cautiously reserved," and additional comments would be forthcoming during the public hearing/comment period.

The proposed amendment to strike Section 23, which deals with coal extraction as an incidental part of development of land for commercial, residential, industrial or civic use, was questioned by Council. John explained to Council that this provision was amended into the rule a few years ago, but never approved by OSM, and therefore deleted from the rule mainly as a cleanup. Bill Raney said that he is hesitant to see the Section deleted from the rule since it is still in DEP's statute, and has been beneficial to businesses several times throughout the state. After further discussion, Chairman Castle agreed to reinstate Section 23 and will work with OSM to seek program approval.

Rocky Parsons, OMR Assistant Chief, discussed the newly-proposed Quarry mining rules, 38CSR3, authorized in HB 4055, effective June 8. He said that the Statue was developed through the stakeholders' process, and the rules have been drafted the same way. DEP intends to file the rules as "Emergency," and at the same time file the rules to go through the normal legislative rule-making process. He said it is still a working document, but any changes made will be as a result of the stakeholders' process.

After discussion/questions on 38CSR3, the following comments are noted by Council members:

Mr. Larry Harris commented by e-mail on 38CSR3. He stated that his concerns for quarries are "related to degradation of nearby streams and water tables. Where limestone is located the quality of streams is generally high, often being trout streams. Quarries can alter the quality of the stream through siltation, and the quantity through alterations of the water table due to blasting. Hence, we want to make sure that the rules adequately address these two issues. I think that the water quality baseline studies should include a bottom fines analysis of receiving streams. Duffield of the Forest Service has established a direct relationship between the % of fines in stream sediment and the biological productivity of the stream. Having a baseline value for the receiving stream, and requiring monitoring to assure that this figure is not increased to the

point where productivity is altered, would be a suitable protection for the stream - Part of 3.5 of the proposed rules."

Mr. Harris also noted his objection to calling streams "Natural Drainways" in subsection 2.17 of the definitions - He stated that "this nomenclature lowers the status of streams to drains, which are essentially industrial conduits or pipes. Very often these streams are manipulated in a way that destroys habitat and degrades the productivity of that stream."

Rocky responded that he will take these comments to the next stakeholders' meeting for their consideration, including a possible rewrite of 2.17.

Mr. Harris also asked if there are any preblast assessments or surveys of the groundwater level. Rocky responded by saying that preblast surveys do require a sampling of the water wells. With, quarries, operations in existence now have a year to do a preblast survey to the nearest protected structure within 1,000 feet of the blasting area. A new permit has to do a preblast survey for any structure within 1,500 feet of the blasting area, as opposed to 1/2 mile with coal.

Bill Samples pointed out section 7.4.b., that deals with sediment control, seems to be awkwardly worded. As it is worded, the Director has to make a very definitive determination on something that the applicant only has to have a reasonable likelihood of. Chairman Castle agreed with this comment, and the rule will be amended accordingly.

Mr. Samples also noted in 7.4.c., that normally in an environmental regulation when something has to be removed, you say it has to be disposed of in an appropriate manner. Chairman Castle agreed with this comment and amendment to this section.

3. <u>Open Discussion.</u>

Chairman Castle introduced Libby Chatfield, Technical Advisor for the Environmental Quality Board. Chairman Castle thanked Libby for taking the time to appear before Council to discuss 46CSR1, EQB's Water Quality Standard Rule. Randy Sovic, DEP's Office Water Resources, also participated in the discussion.

After discussions/questions concerning the proposed EQB rule, the following comments are noted from Council members:

Bill Raney said that even though the Boards (the Environmental Quality Board and Solid Waste Management Board) are not required

to come before the Council with their proposed Legislative rules, he would like to go on record as being "absolutely in opposition" to the proposed Groundwater Quality Standards' rule amendments until a full-blown, socio-economic impact statement is done. He said he does take exception to the fact that the Board can autonomously go forward with the rules without coming to the Advisory Council, and that he believes the obligations and costs will be enormous, both to the state and to industry.

Lisa Dooley stated that she is in complete agreement with Mr. Raney, and would also like to go on record as being opposed to EQB's proposed rule. She said that the proposed rule amendments, especially as they relate to the economic development part, very much concern her. She believes any economic development in West Virginia will be subject to the state's anti-degradation policy. And that policy should be reviewed and compared to surrounding states so that it is not detrimental for businesses and municipalities.

Bill Samples said that there is a multitude of concerns with this rule amendment, and that industry certainly has a major concern with it. He said that other states with anti-degradation rules may not have brought things to a stop, but certainly delayed them. He said that he would also like to go on record as being opposed to this rule amendment.

Rick Roberts asked to be included, for the record, his opposition to the proposed rule.

Director Castle said that the connection and link to DEP with regard to implementing the proposed EQB rules will definitely be taken into consideration.

Before adjournment of the meeting Bill Raney said he would like to go on record to thank Carrie Chambers for putting together the rules package and e-mailing them to Counsel in a timely fashion. Chairman Castle adjourned the meeting at 4:00 p.m.

APPENDIX B

FISCAL NOTE FOR PROPOSED RULES

Rule Title: 45CSR34 "Emission Standards for Hazardous Air Pollutants For Source Categories Pursuant to 40 CFR Part 63"

Type of Rule: X Legislative _____ Interpretive _____ Procedural

Agency: Office of Air Quality

Address: 7012 MacCorkle Avenue, SE

Charleston, WV 25304

1. Effect of Proposed Rule	Annual		Fiscal Year		
	Increase	Decrease	Current	Next	There-after
Estimated Total Cost	$ 0	$ 0	$ 0	$ 0	$ 0
Personal Services	0	0	0	0	0
Current Expense	0	0	0	0	0
Repairs and Alterations	0	0	0	0	0
Equipment	0	0	0	0	0
Other	0	0	0	0	0

2. Explanation of above estimates: Costs anticipated to be incurred in the implementation of federal rules promulgated under 40 CFR Part 63 as of July 10, 2000 will be covered under prior budget estimates for implementing Title V of the Clean Air Act, as amended, under 45CSR30 authorized by the Legislature during the 1994 session and approved (interim approval) by the U.S. Environmental Protection Agency by Final Rule issued on November 15, 1995.

3. Objectives of these rules: This rule establishes general provisions for emission standards for hazardous air pollutants and other regulatory requirements pursuant to section 112 of the Clean Air Act, as amended. Promulgation of this rule by the Legislature is necessary for the State to fulfill its responsibilities under the Clean Air Act, as amended.

4. Explanation of Overall Economic Impact of Proposed Rule.

A. Economic Impact on State Government.

See Section 2.

B. Economic Impact on Political Subdivisions; Specific Industries; Specific groups of Citizens.

No impact above that resulting from the currently applicable federal emission standards.

C. Economic Impact on Citizens/Public at Large.

No impact above that resulting from the currently applicable federal emission standards.

Date: August 28, 2000

Signature of Agency Head or Authorized Representative

Carrie J. Charles

FILED

AUG 29 3 24 PM '00

OFFICE OF WEST VIRGINIA
SECRETARY OF STATE

TITLE 45
LEGISLATIVE RULE
DIVISION OF ENVIRONMENTAL PROTECTION
OFFICE OF AIR QUALITY

SERIES 34
EMISSION STANDARDS FOR HAZARDOUS AIR POLLUTANTS FOR SOURCE CATEGORIES PURSUANT TO 40 CFR PART 63

§45-34-1. General.

1.1. Scope. -- This rule establishes general provisions for national emission standards for hazardous air pollutants (NESHAPS) and other regulatory requirements pursuant to section 112 of the federal Clean Air Act, as amended ~~in 1990~~ (CAA). This rule codifies general procedures and criteria to implement emission standards for stationary sources that emit (or have the potential to emit) one or more of the substances listed as hazardous air pollutants (HAP) in or pursuant to section 112(b) of the CAA. It is the intent of the Director to adopt these standards by reference. It is also the intent of the Director to adopt associated reference methods, performance specifications and other test methods which are appended to these standards.

1.2. Authority. -- W.Va. Code §§22-5-1 et seq.

1.3. Filing Date. -- ~~May 19, 2000~~

1.4. Effective Date. -- ~~June 1, 2000~~

1.5. Incorporation by Reference. -- Federal Counterpart Regulation. The Director has determined that a federal counterpart regulation exists, and in accordance with the Director's recommendation, with limited exception, this rule incorporates by reference, 40 CFR Part 63, effective July 1, 1998~~9~~, as amended by the Federal Register through ~~June 1, 1999~~ July 10, 2000.

1.6. Former Rules. -- This legislative rule amends 45CSR34 "Emission Standards for Hazardous Air Pollutants Pursuant to 40 CFR Part 63" which was filed May ~~20, 1999~~19, 2000, and which became effective June 1, ~~1999~~2000.

§45-34-2. Requirements.

2.1. ~~After the effective date of the state permit program under Title V of the CAA, no person may modify a major source of hazardous air pollutants, unless the Director determines that the maximum achievable control technology emission limitation under this rule for existing sources will be met~~No person may construct, reconstruct, modify, or operate, or cause to be constructed, modified, or operated any National Emission Standards for Hazardous Air Pollutants (NESHAP) source which results, or will result, in a violation of this rule.

2.2. After the effective date of the state permit program under Title V of the CAA, no person may construct or reconstruct any major source of hazardous air pollutants, unless the Director determines that the maximum achievable control technology emission limitation under this rule for new sources will be met.

2.3. After the effective date of the state permit program under Title V of the CAA, the Director shall determine and apply case-by-case maximum achievable control technology standards to existing sources categorized by the Administrator pursuant to Section 112(c)(1) of the CAA for which the Administrator has not promulgated emission standards in accordance with Section 112(d) and 112(e) of the CAA.

2.4. Prior to constructing, reconstructing or modifying any facility subject to this rule, the owner or operator shall obtain a permit in accordance with the applicable requirements of 45CSR13, 45CSR14, 45CSR30 and this rule.

§45-34-3. Definitions.

3.1. "Administrator" means the Administrator of the United States Environmental Protection Agency or his or her ~~designated~~ authorized representative.

3.2. "Clean Air Act" ("CAA") means 42 U.S.C. §§7401 et seq.

3.~~2.~~3. "Director" means the ~~D~~director of the ~~West Virginia~~ ~~D~~division of ~~E~~environmental ~~P~~protection or such other person to whom the Director has delegated authority or duties pursuant to W. Va. Code §§22-1-6 or 22-1-8.

3.~~3.~~4. "Hazardous air pollutant" means any air pollutant listed pursuant to §112(b) of the CAA as of ~~June 1, 1999~~ July 10, 2000.

§45-34-4. Adoption of Standards.

4.1. The Director hereby adopts and incorporates by reference the provisions of 40 CFR Part 63 including any reference methods, performance specifications and other test methods which are appended to such standards and contained in 40 CFR Part 63 effective July 1, 1998~~9~~, as amended by the Federal Register through ~~June 1, 1999~~ July 10, 2000, for the purposes of implementing a program for ~~national~~ emission standards for hazardous air pollutants for source categories, except as follows:

4.1.a. Section 63.15 is amended to provide that information shall be available to the public in accordance with W.Va. Code §§22-5-1 et seq., §§29B-1-1 et seq., and 45CSR31.

4.1.b. Any provision related to section 112(r) of the CAA, notwithstanding any requirements of 45CSR30.

~~4.1.c. Subpart EEE of 40 CFR Part 63 shall be excluded.~~

§45-34-5. Director.

5.1. Any and all references in 40 CFR Part 63 to the "Administrator" are amended to be the "Director" except as follows:

5.1.a. where the federal regulations specifically provide that the Administrator shall retain authority and not transfer such authority to the State;

5.1.b. where provisions occur which refer to:

5.1.b.1. alternate means of emission limitations;

5.1.b.2. alternate control technologies;

5.1.b.3. innovative technology waivers;

5.1.b.4. alternate test methods;

5.1.b.5. alternate monitoring methods;

5.1.b.6. waivers/adjustments to recordkeeping and reporting;

5.1.b.7. emissions averaging; or

5.1.b.8. applicability determinations; or

5.1.c. where the context of the regulation clearly requires otherwise.

§45-34-6. Permits.

6.1. Nothing contained in this rule shall be construed or inferred to mean that permit requirements in accordance with applicable rules shall in any way be limited or inapplicable.

§45-34-7. Inconsistency Between Rules.

7.1. In the event of any inconsistency between this rule and any other existing rule of the West Virginia Division of Environmental Protection, such inconsistency shall be resolved by the determination of the Director and such determination shall be based upon the application of the more stringent provision, term, condition, method, rule or regulation.

Division of Environmental Protection

Public Hearing: Rules 45CSR1, 45CSR6, 45CSR15, 45CSR16, 45CSR23, 45CSR25, 45CSR30 and 45CSR34 **Time/Date:** 8/14/2000 6:00p

NAME	ADDRESS	COMMENT YES	COMMENT NO
1. Tina Adams	Flexsys		X
2. Kim Brown Poland	Robinson + McElwee LLP	X	
3. Liz Appel	Robinson & McElwee LLP		X
4. Dave Young	Robinson & McElwee LLP		X
5. Kathy G. Beckett	Jackson + Kelly / WV Chamber		
6. [illegible]	Charleston Gazette		X
7. David M Flannery	Jackson + Kelly		X
8. Tim Mallon	AEP-WV		X
9. Lisa McClung	OAQ		X
10. Karen Watson	"		X
11.			
12.			
13.			
14.			
15.			

ORIGINAL

BEFORE THE WEST VIRGINIA DIVISION OF
ENVIRONMENTAL PROTECTION
OFFICE OF AIR QUALITY

In the matter of:

PUBLIC HEARING ON PROPOSED LEGISLATIVE RULE

45 CSR 34 - "Emission Standards for Hazardous Air Pollutants For Source Categories Pursuant to 40 CFR Part 63".

Transcript of proceedings had at a public hearing in the above-styled matter taken by Missy L. Young, Certified Court Reporter and Commissioner in and for the State of West Virginia, at the West Virginia Division of Environmental Protection, Office of Air Quality, Conference Room, 7012 MacCorkle Avenue, S.E., Charleston, West Virginia, commencing at 6:03 p.m., on the 14th day of August 2000, pursuant to notice.

FORM CSR - LASER REPORTERS PAPER & MFG. CO. 800-626-6313

1 **P R O C E E D I N G S**

2 MS. CHANDLER:

3 The purpose of this public hearing is to accept
4 comments on 45CSR34 - "Emission Standards for Hazardous
5 Air Pollutants For Source Categories Pursuant to 40 CFR
6 Part 63". The current version of 45CSR34 provides
7 authority for the Director to determine and enforce case-
8 by-case maximum achievable control technology (MACT)
9 standards for major hazardous air pollutant sources in the
10 absence of a federal standard under certain circumstances
11 as required for permit program approval under Title V of
12 the federal Clean Air Act as amended. The proposed rule
13 will, however, delete the requirement for case-by-case
14 MACT for sources which modify in accordance with the
15 current federal regulations implementing 112(g) of the
16 Clean Air Act.

17 The rule also establishes general provisions for
18 emission standards for hazardous air pollutants and other
19 regulatory requirements pursuant to section 112 of the
20 Clean Air Act. The rule codifies general procedures and
21 criteria to implement emission standards for stationary
22 sources that emit (or have the potential to emit) one or
23 more of the hazardous air pollutants in or pursuant to
24 section 112(b) of the Clean Air Act.

FORM CSR - LASER REPORTERS PAPER & MFG. CO. 800-626-6313

1 This revised rule incorporates by
2 reference additional provisions relating to primary lead
3 smelting, Group 1 and Group IV polymers and resins,
4 phosphoric acid manufacturing and phosphate fertilizers
5 production, wool fiberglass manufacturing, Portland cement
6 manufacturing, oil production, natural gas production,
7 transmission, and storage, hydrochloric acid process steel
8 pickling facilities and regeneration plants, pesticide
9 active ingredient production, Generic Maximum Achievable
10 Control Technology, constructed or reconstructed major
11 sources, halogenated solvent cleaning, off-site waste and
12 recovery operations, publicly owned treatment works,
13 ethylene oxide commercial sterilization and fumigations
14 operations, amino/phenolic resins production, secondary
15 aluminum production, synthetic organic chemical
16 manufacturing industry, epoxy resins production and non-
17 nylon polyamides production, and petroleum refineries.
18 Subpart EEE (hazardous waste combustors) which
19 was previously incorporated by 45CSR25, is no longer
20 excluded from this rule because the Director has decided
21 to include all federal regulations codified at 40 CFR Part
22 63 in this rule, even where a source is subject to
23 requirements in other rules or programs. In the case of
24 hazardous waste combustors, these facilities will be

FORM CSR - LASER REPORTERS PAPER & MFG. CO. 800-626-6313

1 subject to the requirements of 45CSR25, which is the
2 implementing rule for the federal Resource Conservation
3 and Recovery Act, in addition to the requirements under
4 the Clean Air Act at 40 CFR Part 63.
5 This rule, in conjunction with existing rule
6 45CSR15, establishes general provisions for emission
7 standards for hazardous air pollutants and other
8 regulatory requirements promulgated by the U.S.
9 Environmental Protection Agency, as of June 1, 2000,
10 pursuant to section 112 of the Clean Air Act. This rule
11 codifies general procedures and emission standards for
12 certain stationary sources that emit (or have the
13 potential to emit) one or more of the substances listed as
14 hazardous air pollutants in section 112(b) of the Clean
15 Air Act. 45CSR34 incorporates hazardous air pollutant
16 standards codified by U.S. Environmental Protection Agency
17 under 40 CFR Part 63, whereas the earlier existing rule
18 for hazardous air pollutants, 45CSR15, primarily
19 incorporates hazardous air pollutant standards promulgated
20 by U.S. Environmental Protection Agency under 40 CFR Part
21 61 prior to amendment of the Clean Air Act. The Director
22 intends to incorporate the additional federal counterpart
23 rules by reference. Promulgation of this rule by the
24 Legislature is necessary for the State to fulfill its

FORM CSR - LASER REPORTERS PAPER & MFG. CO. 800-626-6313

1 responsibilities under the Clean Air Act.

2 Upon authorization and promulgation of revisions

3 to 45CSR34, the Office of Air Quality will seek federal

4 delegation of authority from the U.S. Environmental

5 Protection Agency to implement and enforce the revised

6 standards.

7 The floor is now open for public comment.

8 There being nothing further, this public hearing

9 for 45CSR34 is concluded. The comment period has been

10 extended until 5:00 p.m., Monday, August 21st.

11 (WHEREUPON, the public hearing

12 was concluded.)

FORM CSR - LASER REPORTERS PAPER & MFG. CO. 800-626-6313

BEFORE THE WEST VIRGINIA DIVISION OF
ENVIRONMENTAL PROTECTION
OFFICE OF AIR QUALITY

STATE OF WEST VIRGINIA,

COUNTY OF KANAWHA, to-wit:

I, the undersigned, Missy L. Young, a Certified Court Reporter and Commissioner within and for the State of West Virginia, duly commissioned and qualified, do hereby certify that the foregoing is, to the best of my skill and ability, a true and accurate transcript of all the proceedings had in the aforementioned matter.

Given under my hand and official seal this 22nd day of August 2000.

Missy L. Young

Certified Court Reporter
Commissioner for the State of West Virginia

My commission expires April 15, 2008.

FORM CSR - LASER REPORTERS PAPER & MFG. CO. 800-626 6313

NOTICE:

ALL FEDERAL ATTACHMENTS ARE UNCHANGED. SEE THE COMMENT PERIOD TO VIEW THESE ATTACHMENTS.

ENVIRONMENTAL PROTECTION AGENCY

40 CFR Part 63

[AD–FRL–6345–8]

RIN 2060–AE97

National Emission Standards for Hazardous Air Pollutants for Primary Lead Smelting

AGENCY: Environmental Protection Agency (EPA).

ACTION: Final rule.

SUMMARY: This action promulgates national emission standards for hazardous air pollutants (NESHAP) for new and existing primary lead smelters pursuant to section 112 of the Clean Air Act (Act) as amended in November 1990. Primary lead smelters have been identified by the EPA as significant emitters of lead compounds, and other metal hazardous air pollutants (HAP) including arsenic, antimony, and cadmium. Exposure to lead compounds may result in adverse effects on the blood, central nervous system and kidneys. Chronic exposure to arsenic is associated with skin, bladder, liver and lung cancer and other developmental and reproductive effects. This NESHAP provides protection to the public by requiring all primary lead smelters to meet emission standards that reflect the application of maximum achievable control technology (MACT).

EFFECTIVE DATE: June 4, 1999.

ADDRESSES: *Docket.* Docket No. A–97–33 contains supporting information used in developing the standards. The docket is located at the U.S. Environmental Protection Agency, 401 M Street, SW, Washington, DC, 20460 in room M–1500, Waterside Mall (ground floor), and may be inspected from 8:30 a.m. to 12:00 p.m. and 1:00 to 3:00 p.m., Monday through Friday. The regulatory text and other materials related to this rulemaking are available for review in the docket or copies may be mailed on request from the Air Docket by calling (202) 260–7548. A reasonable fee may be charged for copying docket materials.

FOR FURTHER INFORMATION CONTACT: For information concerning these standards and technical aspects of primary lead smelting emissions and control, contact Mr. Kevin Cavender, Environmental Protection Agency, MD–13, Research Triangle Park, NC 27711, telephone number (919) 541–2364, facsimile number (919) 541–5600, electronic mail address "cavender.kevin@epa.gov.".

SUPPLEMENTARY INFORMATION:

Regulated Entities. The regulated category and entities affected by this action include primary lead smelters (SIC 3339). This action will affect three existing primary lead smelting facilities and any new primary lead smelting facilities built in the future.

Technology Transfer Network. The text of today's notice will also be available on the Technology Transfer Network (TTN), one of EPA's electronic bulletin boards. The TTN provides information and technology exchange in various areas of air pollution control. The service is free, except for the cost of a phone call. Dial (919) 541–5742 for up to a 14,400 BPS modem. The TTN also is accessible through the Internet at "http://www.epa.gov/ttn". If more information on the TTN is needed, call the HELP line at (919) 541–5348. The HELP desk is staffed from 11 a.m. to 5 p.m.; a voice menu system is available at other times.

Outline.

The information presented in this preamble is organized as follows:

I. Background
II. Summary
A. Summary of the Promulgated Standards
B. Summary of Major Changes Since Proposal
C. Summary of Environmental, Energy, and Economic Impacts
III. Public Participation
IV. Summary of Comments and Responses
A. Comments on April 1998 Proposal
B. Comments on February 1999 Supplemental Proposal
V. Administrative Requirements
A. Docket
B. Executive Order 12866
C. Executive Order 12875
D. Executive Order 13084
E. Unfunded Mandates Reform Act
F. Regulatory Flexibility Act
G. Paperwork Reduction Act
H. Submission to Congress and the General Accounting Office
I. National Technology Transfer and Advancement Act
J. Pollution Prevention Considerations
K. Protection of Children from Environmental Health Risks and Safety Risk Under Executive Order 13045
L. Judicial Review

I. Background

Section 112 of the Act requires that the EPA promulgate regulations requiring the control of HAP emissions from major and certain area sources. The control of HAP's is achieved through promulgation of emission standards under sections 112(d) and (f) and, in appropriate circumstances, work practice standards under section 112(h).

An initial list of categories of major and area sources of HAP's selected for regulation in accordance with section 112(c) of the Act was published in the **Federal Register** on July 16, 1992 (57 FR 31576). Primary lead smelting is one of the 174 categories of sources listed. The category consists of smelters that process lead bearing ore concentrates into lead metal. The listing was based on the Administrator's determination that primary lead smelters may reasonably be anticipated to emit several of the 188 listed HAP's in quantities sufficient to designate them as major sources. Information subsequently collected by the EPA as part of this rulemaking confirms that all three operating primary lead smelters have the potential to emit greater than 9.1 megagrams per year (Mg/yr) (10 tons per year (tpy)) of a single HAP or greater than 22.7 Mg/yr (25 tpy) of a combination of HAP's (Docket ID No. II-B–4). Therefore, all three primary lead smelters are major sources.

This NESHAP was proposed in the **Federal Register** on April 17, 1998 (63 FR 19200). The EPA received 2 letters commenting on the proposed rule. The EPA received no requests for a public hearing.

A supplemental proposal was published in the **Federal Register** on February 12, 1999 (64 FR 7149). This notice proposed an operating limit that would require owners and operators of a primary lead smelter (referred to as operators in the remainder of this preamble) to operate and maintain each affected baghouse such that the required bag leak detection system would not sound more than five percent of the operating time. The EPA received three letters commenting on the supplemental proposal. The EPA received no requests for a public hearing on the supplemental proposal.

II. Summary

A. Summary of the Promulgated Standards

Standards are being promulgated to limit metal HAP emissions from: (1) process sources, (2) process fugitive sources, and (3) fugitive dust sources at primary lead smelters. Process source emissions are discharged as the main exhaust of a sinter machine or smelting furnace through a chimney, flue, or ductwork. Process sources that are regulated include sinter machines, blast furnaces, and dross furnaces.

Process fugitive emission sources that are regulated include sinter machine charging and discharging, sinter crushing and sizing, blast furnace tapping, and dross furnace charging and tapping.

Fugitive dust sources that are regulated include plant yards and roadways subject to wind and vehicle traffic, process areas, and materials handling and storage areas.

1. Process and Process Fugitive Sources

A "plant wide" emission limit is being promulgated for lead compounds from process and process fugitive emission sources. The lead compound emission limit is a surrogate for all metal HAP's and will apply to both existing and new sources. The aggregated lead emissions from the following process and process fugitive sources are limited to 500 g/Mg of lead produced (1.0 lb/ton of lead produced):

(1) Sinter machine;

(2) Blast furnace;

(3) Dross furnace;

(4) Dross furnace charging location;

(5) Blast and dross furnace tapping locations;

(6) Sinter machine charging location;

(7) Sinter machine discharge end;

(8) Sinter crushing and sizing equipment; and

(9) Sinter machine area.

In addition to the emission limit, work practice standards are required for the above listed fugitive sources (items 4 through 9). The charging, tapping, and sinter handling sources identified above (items 4 through 8) shall be equipped with a hood ventilated to an air pollution control device. The hood design and ventilation rate shall be consistent with the American Conference of Governmental Industrial Hygienists (ACGIH) recommended practices. In addition, the sinter machine and sinter crushing and sizing equipment shall be located in a building ventilated to a baghouse or equivalent device at a rate that maintains in-draft through any doorway opening.

The operator must install a bag leak detection system for each baghouse used on a process or process fugitive source. The bag leak detection system shall be equipped with an audible alarm that automatically sounds when an increase in particulate matter (PM) emissions above a predetermined level is detected. Operators are further required to maintain and operate each affected baghouse such that the bag leak detection device does not sound more than five percent of the total operating time in any 6-month period. Alarms caused by startups, shutdowns, or malfunctions are not included in the alarm time calculation if the condition is described in the startup, shutdown, and malfunction plan and the operator follows all the procedures in the plan prescribed for the subject condition. Alarms caused by a malfunction of the bag leak detection system are also excluded from the alarm time calculation.

2. Standards for Fugitive Dust Sources

The standards for fugitive dust sources are in the form of work practice and operating standards. The EPA is setting work practice and operating standards based on the determination in accordance with section 112 (h)(2)(A) that the HAPs controlled by those standards cannot be emitted through a conveyance designed and constructed to emit or capture those HAP. Again, the standards apply to fugitive dust sources at both new and existing smelters. Each primary lead smelter shall develop a Standard Operating Procedures (SOP) manual for fugitive dust sources that details procedures to limit fugitive dust emissions. Each smelter's SOP manual shall be reviewed and subject to approval by the Administrator. Existing manuals developed as part of a control strategy to meet a facility's State implementation plan (SIP) may be used to meet this requirement if the existing manuals address the identified fugitive dust sources.

3. Compliance Dates

Compliance with the standards must be achieved by June 4, 2001 for existing primary lead smelters, and upon startup for new and reconstructed smelters.

4. Compliance Test Methods

The following EPA test methods will be used to measure the lead emissions from the process and process fugitive sources included in the plant wide emission limit. Testing of lead compound emissions from process and process fugitive emission control devices shall be conducted according to EPA reference method 12 (40 CFR part 60, appendix A). Sampling locations for all compliance tests shall be determined by EPA reference method 1. Stack gas velocity and volumetric flow rate shall be determined by EPA reference method 2. Gas analysis shall be conducted according to EPA reference method 3 for carbon dioxide, oxygen, excess air, and molecular weight on a dry basis.

The plant wide emission rate will be calculated as follows. The previous 12 calender months production data shall be used to calculate lead production based on the mass produced, and the lead content of lead products, copper speiss, and copper matte. Plant records will be used to determine the facility operating hours for the previous 12 calender months. The plant wide emission rate is calculated by dividing the sum of lead emission rates, determined through stack testing, for the process and process fugitive sources by the average hourly lead production rate for the previous 12 calender months.

Operators are required to perform an initial compliance demonstration for the sinter machine building in-draft requirement. Operators are required to demonstrate in-draft at all doorway openings using an anemometer or equivalent device. The demonstration is to be conducted when wind speed is less than two meters per second (five miles per hour.)

5. Monitoring Requirements

Each operator subject to the NESHAP shall be required to develop and operate according to a SOP manual for operation and maintenance of the control devices used to comply with the emission limits. Each smelter's SOP manual shall be reviewed and subject to approval by the Administrator. The minimum SOP requirements identified in the rule shall serve as the criteria by which the Administrator would decide whether to approve a smelter's SOP.

Minimum requirements for the bag leak detection system required in the process and process fugitive standards section are detailed. The bag leak detection system shall be equipped with an audible alarm that automatically sounds when an increase in particulate emissions above a predetermined level is detected. The system shall be capable of detecting PM emissions at concentrations of 10 milligrams per actual cubic meter (0.004 grains per actual cubic foot) and provide an output of relative PM emissions. Operators shall continuously record the bag leak detection system output. Such a device shall serve as an indicator of the performance of the baghouse and shall provide an indication of when maintenance of the baghouse is needed. An alarm by itself will not necessarily indicate noncompliance with the lead limit, but would indicate an increase in PM emissions and trigger an inspection of the baghouse to determine the cause of the alarm. The operator would initiate corrective actions according to the procedures in their operation, maintenance, and monitoring plan. The operator would be considered out of compliance upon failure to initiate within one hour the procedures to determine the cause of the alarm, as specified in the baghouse operation and maintenance SOP manual.

Operators are given three options for the monitoring of sinter building in-draft. Under the first option, operators may elect to perform daily checks for in-draft at all doorway openings using an anemometer or equivalent device. Checks are only to be conducted when ambient wind speed is less than two meters per second (five miles per hour).

Under the second option, operators are required to establish and maintain the ventilation exhaust rate and damper positions at settings that result in an in-draft at each open doorway. Operators are required to install and operate a flow monitor device on the ventilation system that would continuously record the ventilation exhaust rate. Operators are required to conduct an initial demonstration of in-draft at all doorway openings using an anemometer or equivalent device while simultaneously recording the ventilation system exhaust rate and damper positions. Operators are then required to maintain the ventilation rate at or above the average rate recorded during the in-draft demonstration, and check and record daily the damper positions to ensure that they are maintained in the position they were in when the in-draft demonstration was performed.

As a third option, operators may petition the administrator or delegated authority for an alternative monitoring method by following the procedures and requirements in § 63.8(f) of the General Provisions.

6. Notification Requirements

The operator of a primary lead smelter is required to submit the notifications described in § 63.9 of the General Provisions to part 63, (40 CFR part 63, subpart A). These will include the initial notification, notifications of performance tests, and the notification of compliance status. In addition, each operator will be required to submit the baghouse operation and maintenance SOP manual and the fugitive dust control SOP manual along with a notification to the Administrator requesting review and approval of the smelter's SOP manuals.

7. Recordkeeping and Reporting Requirements

The operator of a primary lead smelter will be required to comply with the recordkeeping and reporting requirements described in § 63.10 of the General Provisions to part 63, (40 CFR part 63, subpart A). In addition, the operator of a primary lead smelter will be required to retain for 5 years records of: (1) production data of the weight and lead content of lead products, copper matte, and copper speiss; (2) records of bag leak detection system output; (3) an identification of the date and time of all bag leak detection system alarms, the time procedures to determine the cause of the alarm were initiated, their cause, and an explanation of the corrective actions taken; (4) records of daily in-draft checks (if applicable); (5) records of the output from the flow monitoring system (if applicable); (6) records of the daily damper position checks (if applicable); (7) records demonstrating implementation of the baghouse SOP; and (8) records demonstrating implementation of the fugitive dust controls contained in the smelter's SOP manual.

In addition to the information required by the General Provisions to part 63, (40 CFR part 63, subpart A), the operator of a primary lead smelter will be required to submit semi-annual reports containing: (1) records of all alarms from the bag leak detection system including a description of the procedures taken following each bag leak detection system alarm; (2) the percent of operating time the bag leak detection alarmed; (3) a summary of the records maintained as part of the practices described in the baghouse SOP, including an explanation of the periods when the procedures were not followed and the corrective actions taken; (4) an identification of the periods when the in-draft was 0.0 meters per second or less, and an explanation of the corrective actions taken (if applicable); (5) an identification of the periods when the 15-minute volumetric flow rate(s) dropped below the minimum established during the most recent in-draft determination (if applicable); (6) an identification of the days that the damper positions were not in the positions established during the most recent in-draft determination, and an explanation of the corrective actions taken (if applicable); and (7) a summary of the fugitive dust control measures performed during the required reporting period, including when procedures outlined in the fugitive dust control SOP were not followed and the corrective actions taken.

B. Summary of Major Changes Since Proposal

Based on public comments received in response to both the initial notice of proposal and the supplemental notice, the EPA has made several changes to the proposed rule. A summary of the major changes is presented below.

1. Definitions

A definition of bag leak detection system has been added to the final rule. Based on the definition, a "bag leak detection system means a system that is capable of monitoring particulate matter (dust) loadings in the exhaust of a baghouse in order to detect bag failures. A bag leak detection system includes, but is not limited to, an instrument that operates on triboelectric, light scattering, transmittance or other effect to monitor relative particulate matter loadings."

The definition of total enclosure has been replaced with a definition of a building. For the purpose of this subpart, a "building means a roofed and walled structure with limited openings to allow access and egress for people and vehicles."

The definition of malfunction included in the General Provisions has been added to the subpart for clarity. A "malfunction means any sudden, infrequent, and not reasonably preventable failure of air pollution control equipment, process equipment, or a process to operate in a normal or usual manner. Failures that are caused in part by poor maintenance or careless operation are not malfunctions."

A definition of operating time has been added. For the purpose of this subpart, "operating time means the period of time in hours that an affected source is in operation beginning at a startup and ending at the next shutdown."

A definition of plant operating time has been added. For the purpose of this subpart, "plant operating time means the period of time in hours that either a sinter machine or blast furnace is in operation."

The definition of shutdown in the General Provisions has been added to the subpart for clarity. A "shutdown means the cessation of operation of an affected source for any purpose."

The definition of startup in the General Provisions has been added to the subpart for clarity. A "startup means the setting in operation of an affected source for any purpose."

2. Standards for Process and Process Fugitive Sources

The requirements for annual compliance tests have been changed. Upon demonstrating compliance for 3 consecutive years, operators will be allowed up to 24 months between compliance tests. Operators will retain the 24 month compliance test schedule as long as each subsequent test demonstrates that the facility is in compliance with the plant wide emission limit.

An operating limit has been added that requires operators to maintain and operate each affected baghouse such that the bag leak detection system does not alarm more than five percent of the time in any 6-month period. Alarms caused by startups, shutdowns, or malfunctions are not included if the condition is described in the startup, shutdown, malfunction plan and the operators follow all the procedures in the plan prescribed for the subject

condition. Alarms caused by a malfunction of the bag leak detection system are also excluded from the alarm time calculation.

3. Monitoring Requirements

The monitoring requirements for baghouses have been modified. Operators will be required to identify, and monitor against, the normal pressure drop range across each baghouse cell. Also, the requirement for a quarterly check of bag tension has been changed to a quarterly visual check of bag tension.

The requirements for demonstrating compliance with the sinter machine building in-draft requirements have been changed. Operators are given three options for the continuous monitoring of in-draft. Under the first option, operators may elect to perform daily checks for in-draft at all doorway openings using an anemometer or equivalent device.

Under the second option, operators are required to establish and maintain the ventilation exhaust rate and damper positions at settings that result in an in-draft at each open doorway. Operators are required to install and operate a flow monitor device on the ventilation system that would continuously record the ventilation exhaust rate. Operators are required to conduct an initial demonstration of in-draft at all doorway openings using an anemometer or equivalent device while simultaneously recording the ventilation system exhaust rate and damper positions. Operators are then required to maintain the ventilation rate at or above the average rate recorded during the in-draft demonstration, and check and record daily the damper positions to ensure that they are maintained in the position they were in when the in-draft demonstration was performed.

As a third option, operators may petition the Administrator or delegated authority for an alternative monitoring method by following the procedures and requirements in § 63.8(f) of the General Provisions.

C. Summary of Environmental, Energy, and Economic Impacts

There are only three existing primary lead smelters that will be subject to the standards, and no new facilities are anticipated to be constructed in the next 5 years. The required levels of control are based on existing SIP emission limits for lead. No additional emission controls will be required to comply with the standards. Therefore, no quantifiable emission reduction or other environmental impacts are anticipated to result from this rulemaking. However, it is anticipated that improved baghouse operation and maintenance procedures coupled with continuous bag leak detection will result in unquantifiable reductions in emissions of lead compounds and other metal HAP.

Similarly, cost and economic impacts are expected to be minimal. The only costs associated with the standards are those required to perform compliance assurance activities such as performance testing, monitoring, reporting, and recordkeeping. These costs are minimal, and will not result in any significant economic impact.

III. Public Participation

Prior to proposal of the standards, the EPA met with representatives from the only operators of primary lead smelters. The EPA discussed the standards being evaluated for proposal. Comments submitted following this meeting were incorporated into the proposed rule as appropriate.

The standards were proposed and published in the **Federal Register** on April 17, 1998 (63 FR 19200). The preamble to the proposed standards described the technical basis, purpose, and impacts of the proposed standards. Public comments were solicited at the time of proposal.

To provide interested persons the opportunity for oral presentation of data, views, or arguments concerning the proposed standards, the opportunity for a public hearing was offered at proposal; however, no requests for a hearing were received. The public comment period was from April 17, 1998 to June 16, 1998. Two comment letters were received. The comments were carefully considered in formulating the final rule.

A supplemental proposal was published in the **Federal Register** on February 12, 1999 (64 FR 7149). That notice proposed an operating limit that would require owners and operators of a primary lead smelter (referred to as operators in the remainder of this preamble) to operate and maintain each affected baghouse such that the required bag leak detection system would not sound more than five percent of the operating time. Again the opportunity for a public hearing was offered at proposal; however, no requests for a hearing were received. The public comment period was from February 12, 1999 to March 15, 1999. Three comment letters were received. Again, the comments were carefully considered in formulating the final rule.

IV. Summary of Comments and Responses

The EPA received two comment letters (one letter contained joint comments from two commenters) on the initial proposal, and three letters commenting on the supplemental proposal (again, one letter contained joint comments from two commenters). Comment summaries and EPA responses are presented below.

A. Comments on April 1998 Proposal

The comments contain both favorable and adverse comments. Topics and requirements which received favorable and supportive comments include the following:

—The use of lead as a surrogate pollutant for all metal HAP,

—The conclusion that organic HAP emissions from blast furnaces are not significant enough to warrant regulation,

—The use of a plant-wide emission limit,

—The requirement that sinter plants be enclosed and ventilated to a baghouse or equivalent control device,

—The requirement that certain process fugitive emission sources be equipped with a hood and ventilated to a baghouse or equivalent control device,

—Allowing 2 years to achieve compliance, and

—The requirement for an approved plan for the control of fugitive dust emissions.

Topics and provisions of the proposed rule which received adverse comments are summarized below with the EPA's responses.

Comment. One commenter stated that it is not possible to maintain a sinter machine building "at a lower than ambient pressure to ensure in-draft through any doorway opening" at all times. They argue that static pressure measured at any one point in a building is the sum of the pressures caused by the combination of several effects including mechanical or forced ventilation, stack effects, wind influences and local effects. A ventilation system that is designed and operated for a specific building can effectively control the escape of most fugitive emissions. However, the variable influence of stack draft, wind, and local effects will cause the actual building static pressure to vary over space and time, thereby making it impossible to comply with a standard that requires maintaining a building at lower than ambient pressure at all times.

The commenter suggested that the EPA give operators the following three

alternatives. First, require operators to submit to the Administrator or delegated authority a statement from a professional engineer certifying that the design of the ventilation system in the sinter buildings is sufficient to attain in-draft with all doorways in their customary position during normal operation. Each operator would be required to design and operate its ventilation system to meet a minimum exhaust flow rate, and would have to restrict the total surface area of doorways open during normal operation to some maximum.

Second, allow for more flexible performance tests (i.e., use of anemometers) to account for wind effects. The commenter suggested that the performance demonstrations be limited to periods when the wind speed is less than five miles per hour.

The third suggestion was to allow operators flexibility in developing site-specific methods to demonstrate compliance with the in-draft requirement. All site specific alternatives would be subject to approval of the Administrator or delegated authority.

Response. The EPA has considered the comment, and agrees to modify the requirements for sinter building in-draft. The EPA believes that with some modification, the alternatives suggested by the commenter are better than the negative pressure requirements contained in the proposal. As such, the EPA is making the following changes to the proposed rule.

Operators are required to perform an initial compliance demonstration for the sinter machine building in-draft requirement. Operators are required to demonstrate in-draft at all doorway openings using an anemometer or equivalent device. The demonstration is to be conducted when wind speed is less than two meters per second (five miles per hour.)

Operators are given three options for the continued monitoring of in-draft. Under the first option, operators may elect to perform daily checks for in-draft at all doorway openings using an anemometer or equivalent device. This option is similar to the option given in the proposed rule, however, the checks for in-draft are limited to days when the ambient wind speed is less than two meters per second (five miles per hour.)

Under the second option, operators are required to establish and maintain the ventilation exhaust rate and damper positions at settings that result in an in-draft at each open doorway. Operators are required to install and operate a flow monitor device on the ventilation system that would continuously record the ventilation exhaust rate. Operators are required to conduct an initial demonstration of in-draft at all doorway openings using an anemometer or equivalent device while simultaneously recording the ventilation system exhaust rate and damper positions. Again, the demonstration is not to be conducted when wind speeds are greater than two meters per second (five miles per hour.) Operators are then required to maintain the ventilation rate at or above the average rate recorded during the in-draft demonstration, and check and record daily the damper positions to ensure that they are maintained in the position they were in when the in-draft demonstration was performed.

As a third option, the EPA is adding a reference to the section of the General Provisions which describes the procedures for requesting an alternative monitoring method, 40 CFR 63.8(f). This reference is being added to highlight the availability of this option.

Comment. One commenter identified an error in the proposed rule. Section 63.1546(b) states "Operators shall determine compliance with the doorway in-draft requirements for buildings in 63.1543(b) and 63.1544(c) * * *" However, building in-draft requirements are contained in § 63.1543(c).

Response. This error is corrected in the final rule.

Comment. One commenter stated that they are required to test for particulate matter and lead as part of their SIP requirements. The commenter requests that operators be given the flexibility to use the "hybrid Method 5–12" to test for particulate matter and lead simultaneously.

Response. The rule specifies that EPA Method 12 be used to measure lead emission rates. There is no EPA Method 5–12. However, section 8.1 of EPA Method 12 allows for the simultaneous measurement of both lead and particulate matter. As such, no change is being made to address this comment.

Comment. The proposed rule requires quarterly checks of bag tension on certain types of baghouses. One commenter stated that none of their facilities are currently required to check bag tension under existing SIPs. They claim that measuring bag tension would be a time-consuming process resulting in extended periods of worker exposure to high temperatures and potentially lead. They recommend that the requirement for bag tension testing be eliminated, or at a minimum modified to an annual visual check to make certain bags are not kinked (kneed or bent) or lying on their sides.

Response. The EPA agrees with the commenter that measuring bag tension is a time-consuming process that can create increased risks of worker exposures to lead. The EPA also agrees that a visual check is sufficient to determine adequate bag tension. As such, the EPA is amending § 63.1547(c)(6) to require quarterly visual inspections of bag tension to make certain bags are not kinked or lying on their sides.

Comment. One commenter stated that the proposed requirement for bag leak detection devices does not provide for alternative/equivalent methods, such as opacity monitors, which are already in use at some facilities. As such, the regulation would impose unnecessary additional costs by not including other compliance methods.

Response. The EPA is adding a definition of bag leak detection system in the final rule. This definition was inadvertently left out of the proposal. Based on the definition, a "bag leak detection system means a system that is capable of monitoring particulate matter (dust) loadings in the exhaust of a baghouse in order to detect bag failures. A bag leak detection system includes, but is not limited to, an instrument that operates on triboelectric, light scattering, transmittance or other effect to monitor relative particulate matter loadings." This is the same definition that appears in the final rule for secondary lead smelters (40 CFR part 63, subpart X) and several other currently proposed rules which include bag leak detection requirements.

Based on the definition and the requirements of § 63.1547(e)(1), an opacity monitor can be used as a bag leak detection system if the manufacturer of the opacity monitor certifies that it is capable of detecting particulate matter emissions at concentrations of 10 milligram per actual cubic meter or less. However, due to the poor correlation between opacity and particulate matter at low grain loadings, it is doubtful that any conventional opacity monitors have the sensitivity necessary to meet this requirement. Bag leak detection systems based on triboelectric or light scattering effects are capable of detecting particulate matter emissions well below the level of visible emissions, and are believed to be more reliable, accurate, and cost effective than opacity monitors for detecting broken bags in baghouses.

Comment. One commenter stated that the condition of the fan has little, if any, direct effect on baghouse performance. They suggested that this requirement be on an annual basis rather than a quarterly basis.

Response. The EPA concurs that fan condition may have little effect on

baghouse performance. However, fan condition can greatly affect hood capture efficiency and consequently fugitive emissions. The rule allows for the use of vibration detectors to conduct the inspection, which does not require the operator to shutdown the fan or remove it from service. As such, the EPA believes that requiring quarterly inspection of fan condition does not place an undue burden on the industry. No change to the final rule is being made to address this comment.

Comment. One commenter stated that the benefits associated with the suite of monitoring requirements are unclear and at best very low. They suggest that the proposed bag leak detection system requirements alone should be adequate to ensure proper baghouse functioning.

Response. The EPA's proposed operating procedures requirements for baghouses represent a two-pronged approach to baghouse operation—preventative maintenance and baghouse failure monitoring, coupled with timely corrective action. The inspection and maintenance requirements in the proposed rule are intended to ensure the proper operation of the baghouse and to reduce the number of baghouse upsets through prevention. The bag leak detection requirements are intended to assist in early detection of baghouse failures allowing for timely corrective action.

The proposed inspection and maintenance requirements represent a minimal, yet practical, strategy for ensuring proper baghouse operation. The EPA believes that good inspection and maintenance practices are critical to achieving and maintaining the high level of control that baghouses are capable of. Furthermore, these requirements do not result in significant costs or burden.

Comment. One commenter stated that the time limits for initiating corrective action may be impossible to fulfill. With regard to the bag leak detection alarm, the preamble to the proposed rule states, "An alarm by itself does not indicate noncompliance with the lead limit, but would indicate an increase in emissions and trigger an inspection of the baghouse to determine the cause of the alarm." The preamble goes on to state, "The owner or operator would be considered out of compliance upon failure to initiate corrective actions within 1 hour of the alarm." They also point out that the rule states in section 63.1547(f)(1) that "the procedures used to determine the cause of the alarm must be initiated within 30 minutes of the alarm." They comment that reading these provisions together suggests that facilities must always initiate procedures to determine the cause of the alarm within 30 minutes, and to identify the needed repair or response and begin corrective action within 1 hour.

Response. The 30-minute reference in the preamble to the proposed rule is an error. Both the preamble and the rule were intended to refer to the same time period, i.e., the period of time allowed between the time an alarm occurs and the time when procedures to determine the cause of the alarm are initiated. The rule requires facilities to initiate the procedures outlined in their corrective action plan within 1 hour of the alarm and correct the problem as soon as practicable.

Comment. One commenter stated that compliance testing should be required on a less than annual basis. Proposed section 63.1543(d) requires facilities to conduct compliance tests for lead compounds on an annual basis. The commenter suggests that the EPA should permit a reduction in the frequency of testing on a site-by-site basis, based upon the results of annual testing. For example, if 3 years of testing shows the standard is consistently being met, they suggest that a facility be able to reduce the frequency of its testing.

Response. The EPA agrees that less frequent testing should be allowed when facilities are able to demonstrate compliance consistently. As such, the final rule allows operators up to 24 months between compliance tests if the results of the three most recent compliance tests demonstrate compliance.

Comment. One commenter stated that the recordkeeping requirements for the bag leak detection system are inconsistent with recordkeeping requirements for fugitive dust and baghouse inspection and maintenance. Proposed section 63.1549(b)(3) and (4), which refers to control of fugitive dust emissions and baghouse inspection and maintenance procedures, requires recordkeeping if it is part of the practices described in the respective SOP manual. The commenter also stated that the recordkeeping requirements proposed in section 63.1549(b)(2) for the bag leak detection system are not contingent on such requirements being part of the SOP manual, and are thus inconsistent with section 63.1549(b)(3) and (4).

Response. The rule requires facilities to develop site specific SOP manuals for baghouse inspection and maintenance procedures. Since these SOP manuals are site-specific, the EPA has left it up to the operator to work with the Administrator or delegated authority to develop appropriate site specific recordkeeping and reporting requirements. However, the EPA has specified recordkeeping and reporting requirements for bag leak detector system alarms since these records are necessary to demonstrate compliance with the operating standards for bag leak detection (section 63.1543(f) and (g)). No change is being made to the rule to address this comment.

Comment. One commenter stated that a minimum differential pressure should be specified and continuously monitored to ensure the baghouse or equivalent control device is maintained at a pressure that is lower than ambient pressure.

Response. The rule requires daily monitoring of the pressure drop across each baghouse cell. The EPA agrees that a minimum pressure drop should be identified and monitored against. However, several factors affect the pressure drop across a baghouse cell including filter material, cell geometry, cleaning cycles, and air-to-cloth ratio. As such, the minimum pressure drop across the cell is baghouse specific, if not cell specific. Furthermore, there is little or no correlation between baghouse pressure drop and emissions. Therefore, it would be inappropriate for the rule to identify a minimum pressure drop. However, the EPA has amended the rule to require operators to monitor the pressure drop across each cell to ensure that it is within the normal operating range for that cell. Operators will be required to identify the normal operating range for each baghouse cell in the baghouse operation and maintenance SOP.

Comment. One commenter stated that the lead production rate should be calculated on data from the previous 12 months of operation. The commenter adds that the requirement does not consider plant shutdown, when lead production is zero; hence, artificially low emissions could result from the recommended calculation.

Response. Based on the proposed rule, lead production is calculated based on production data for the 12 months prior to conducting the test, including periods when the facility is shut down. The EPA believes that this is in agreement with this statement.

As noted, plant shutdowns would result in lower lead production. However, the result of lower lead production would be to increase the calculated, production-based, lead compound emission rate, not reduce it as suggested by the commenter. In fact, if a facility were to experience a prolonged shutdown, it may be impossible to meet the emission limit based on the proposed calculation.

Upon further review, the EPA has decided to amend the procedure for calculation of the production-based, lead compound emission rate to account for periods when the facility is shut down. As amended, the production-based, lead compound emission rate will be calculated by multiplying the sum of lead emission rates (determined through stack testing, in units of grams per hour) from the nine listed sources by the plant operating hours (in units of hours/year) and dividing by the lead production rate (in units of megagrams per year). Plant operating hours are defined as the period of time in hours that either a sinter machine or blast furnace is in operation.

Comment. One commenter suggested that the bag leak detection system alarms should be set at 75 percent or 80 percent of the previous 12-month average. Alternatively the commenter suggests that the system be equipped with two alarms: a high level set at 75 percent to 80 percent of scale, and a high-high alarm that sounds when the maximum value is reached. The commenter also commented that a requirement for time averaging of the emissions should be added. The commenter suggested the use of 1-minute time averages for monitoring the particulate emissions.

Response. The EPA has developed guidance on the use of bag leak detectors based on information provided by bag leak detection system vendors, industry representatives with bag leak detection experience, and an EPA-sponsored field study. The EPA believes that this guidance provides the most appropriate methods for selecting, installing, initializing, and operating bag leak detection systems. No changes to the rule are being made to address this comment.

Comment. One commenter stated that the differential pressure across baghouses equipped with high efficiency particulate arrestor (HEPA) filters should be monitored once per operating shift and at least 8 hours apart or every 24 hours ± 4 hours. The commenter states that monitoring once a day allows operators to take readings at 0100 hours one day, and at 2300 hours the next day, allowing up to 46 hours to pass between readings.

Response. An exemption to the bag leak detection system requirements is provided in the rule if a baghouse is equipped with a secondary HEPA filter. The exemption is not given if the HEPA filter is the only filter in the system.

Under this configuration, the primary filter collects the bulk of the particulates, while the secondary HEPA filter acts as a finishing filter. Based on discussions with personnel at a secondary lead smelter using secondary HEPA filters, HEPA filters last several months when used as a secondary filter. As such, the EPA believes that daily checks of the differential pressure across the HEPA filter is adequate. No changes to the rule are being made to address this comment.

Comment. One commenter stated that the rule should specify the building ventilation requirements in a definitive way, e.g., by requiring an exhaust system capable of a given number of air changes per hour.

Response. While air changes per hour may be an important consideration in addressing indoor air quality and worker exposure, it has little meaning when assessing the capture effectiveness of a building. The EPA believes that the requirement that the sinter machine building be ventilated at a rate that ensures in-draft through all open doors provides the best assurance that emissions escaping the building are minimized. No changes to the rule are being made to address this comment.

Comment. One commenter stated that for total enclosures there should be a monitoring device on the exhaust fan (e.g., motor current) to verify continuously that the ventilation system is in operation, and added that failure of the ventilation system should be recorded and included in the reporting requirements.

Response. As discussed above, the EPA has amended the rule to require that operators either (1) install, calibrate, and operate a flow monitor to continuously measure and record total exhaust rate out of the enclosure; or (2) perform daily checks for in-draft, with a vane anemometer or equivalent device, at each doorway normally open.

Failure of the ventilation system would be considered a malfunction of the air pollution control equipment. The rule requires that operators develop a start-up, shut-down, and malfunction plan for all air pollution control equipment. In addition, the rule requires operators to record the occurrence and duration of each malfunction of the source or air pollution control equipment. No additional changes are being made to address this comment.

Comment. One commenter stated that there should be some specified limits on the number of allowable violations (alarms) during a given time period.

Response. On February 12, 1999 (64 FR 7149), the EPA proposed an operating limit that would require operators of primary lead smelters to operate and maintain their baghouses such that the bag leak detection system did not alarm more than five percent of the time over a 6-month period. The EPA also added the requirement that operators continuously record the output of the bag leak detection system. The EPA added these requirements to help ensure that baghouses are properly operated and maintained, and that enforcement officials will have adequate data to assess compliance with the bag leak detection system requirements.

B. Comments on February 1999 Supplemental Proposal

Comment. One commenter stated that the term "initiate corrective actions" as used in section 63.1547(e)(9) was somewhat ambiguous, and requested that the EPA clarify what constitutes the initiation of corrective action. Furthermore, they noted that, as required in section 63.1547(f), the first steps in the corrective action process is to acknowledge the alarm and determine its cause. It was suggested that the term "initiate corrective action" be changed to "initiate procedures to acknowledge the alarm and determine its cause, as specified in the corrective actions plan."

Response. The EPA is concerned that the term "initiate corrective action" could be misinterpreted to mean the beginning of a physical repair. As pointed out by the commenter, the first step in the corrective action process is to acknowledge (or record) the alarm and to begin procedures for determining the cause of the alarm. As such, the EPA is changing the proposed rule language to capture more accurately what is intended. The new language requires facilities to "record the date and time of the alarm and initiate procedures to determine the cause of a bag leak detection system alarm" within 1 hour.

Comment. The commenters stated that they believe the addition of section 63.1547(e)(9) makes the provision in section 63.1547(f)(1) redundant. They suggest that section 63.1547(f)(1) be removed.

Response. The EPA does not believe that the requirements of section 63.1547(e)(9) and section 63.1547(f)(1) are redundant. The purpose of the operating limit in section 63.1547(e)(9) is to require operators to operate and maintain an affected baghouse such that upset events are limited to a level that the EPA considers acceptable both in terms of number of occurrences and duration. The intent of the requirement that operators record and initiate procedures to determine the cause of the alarm within 1 hour (section 63.1547(f)(1)) is to ensure that operators acknowledge and respond to each alarm in a timely manner.

Please note that the requirements contained in section 63.1547(e)(9) of the supplemental proposal have been revised in the final rule. The requirement to maintain and operate each baghouse such that the alarm on a bag leak detection system does not sound for more than five percent of the total operating time in a 6-month reporting period has been moved to section 63.1543(f) in the final rule. The methodology to be used in calculating the percent of the total operating time that the alarm sounds has been clarified and moved to section 63.1547(g) in the final rule. In addition, the requirements contained in section 63.1547(f)(1) of the original proposal have been moved to section 63.1543(g) in the final rule.

Comment. One commenter stated that it appears that the EPA is proposing to penalize operators for a rapid response to initiate corrective actions by setting 1 hour as a minimum time counted for each alarm while using the actual time for periods which exceed 1 hour. The commenter proposes that the EPA simplify the requirement such that the alarm time should be counted as the actual amount of time taken by the owner or operator to initiate corrective actions for all cases.

Response. As discussed above, the intent of the operating limit on bag leak detection system alarm time is to limit not only the duration, but also the number of alarm-causing events. By rounding the amount of alarm time counted up to 1 hour for any alarm where the operator responds within 1 hour, the total number of potential alarm-causing events is limited to roughly 220 alarms in a 6-month reporting period. Counting fractions of an hour per event could allow for an unlimited number of events. For example, at 10 minutes per event, the total number of alarm-causing events could be as high as 1,300 in a 6-month reporting period.

Comment. One commenter suggested that the operating limit on bag leak detection system alarm time be reviewed and considered for application to other MACT standards using common add-on emissions control technologies (i.e., baghouses).

Response. The EPA intends to incorporate the operating limit on bag leak detection system alarm time in the rules that EPA is currently developing and any future rules where baghouses are used to control HAP emissions. In addition, the EPA is considering amending existing NESHAP where baghouses are used to control HAP emissions to include the operating limit on bag leak detection system alarm time.

Comment. One commenter stated that by limiting the cumulative time that a source may operate before initiating corrective action, rather than before completing corrective action, the proposed changes would provide an incentive for the operator to indefinitely delay completion of corrective action.

Response. The commenter is mistaken. Section 63.6(e)(1)(ii) of the General Provisions requires that malfunctions be corrected as soon as practicable after their occurrence. As such, an operator cannot delay completion of corrective action without being in violation of the General Provisions. However, the EPA has changed section 63.1543(g) of the final rule to require that "The cause of the alarm shall be corrected as soon as practicable." No other changes are being made to the rule to address this comment.

Comment. One commenter stated that the MACT technology should be reanalyzed to account for the particulate HAP control which is achievable during a one-time performance test conducted on a newly constructed or reconstructed baghouse. The commenter continues to state that while some operators might choose to maintain and promptly repair their air pollution control devices, the rules could not be enforced to require this level of control.

Response. The EPA believes that the commenter has misinterpreted the rule. The commenter infers that the lead emission limits should be based on the level of control that a brand new baghouse can achieve since only a one-time test is required. However, the rule requires annual compliance testing, not a one-time compliance test. Furthermore, the rule contains federally enforceable requirements for the operation and maintenance of each affected baghouse. No change is being made to the rule to address this comment.

V. Administrative Requirements

A. Docket

The docket is an organized and complete file of all the information considered by the EPA in the development of this rulemaking. The docket is a dynamic file because material is added throughout the rulemaking process. The docketing system is intended to allow members of the public and industries involved to readily identify and locate documents so that they can effectively participate in the rulemaking process. Along with the proposed and promulgated standards and their preambles, the contents of the docket will serve as the record in the case of judicial review. (See section 307(d)(7)(A) of the Act.)

B. Executive Order 12866

Under Executive Order 12866 (58 FR 51735, October 4, 1993), the EPA must determine whether the regulatory action is "significant" and therefore subject to review by the Office of Management and Budget (OMB) and the requirements of the Executive Order. The Executive Order defines "significant regulatory action" as one that is likely to result in a rule that may:

(1) Have an annual effect on the economy of $100 million or more or adversely affect in a material way the economy, a sector of the economy, productivity, competition, jobs, the environment, public health or safety, or state, local, or tribal governments or communities;

(2) create a serious inconsistency or otherwise interfere with an action taken or planned by another agency;

(3) materially alter the budgetary impact of entitlements, grants, user fees, or loan programs, or the rights and obligation of recipients thereof; or

(4) raise novel legal or policy issues arising out of legal mandates, the President's priorities, or the principles set forth in the Executive Order.

Pursuant to the terms of Executive Order 12866, it has been determined that this rule is not a "significant regulatory action" because none of the listed criteria apply to this action. Consequently, this action was not submitted to OMB for review under Executive Order 12866.

C. Executive Order 12875

Under Executive Order 12875, EPA may not issue a regulation that is not required by statute and that creates a mandate upon a State, local or tribal government, unless the Federal government provides the funds necessary to pay the direct compliance costs incurred by those governments, or EPA consults with those governments. If EPA complies by consulting, Executive Order 12875 requires EPA to provide to the Office of Management and Budget a description of the extent of EPA's prior consultation with representatives of affected State, local and tribal governments, the nature of their concerns, copies of any written communications from the governments, and a statement supporting the need to issue the regulation. In addition, Executive Order 12875 requires EPA to develop an effective process permitting elected officials and other representatives of State, local and tribal governments "to provide meaningful and timely input in the development of

regulatory proposals containing significant unfunded mandates." Today's rule does not create a mandate on State, local or tribal governments. The rule does not impose any enforceable duties on these entities. None of these entities own or operate an affected source. Accordingly, the requirements of section 1(a) of Executive Order 12875 do not apply to this rule.

D. Executive Order 13084

Under Executive Order 13084, EPA may not issue a regulation that is not required by statute, that significantly or uniquely affects the communities of Indian tribal governments, and that imposes substantial direct compliance costs on those communities, unless the Federal government provides the funds necessary to pay the direct compliance costs incurred by the tribal governments, or EPA consults with those governments. If EPA complies by consulting, Executive Order 13084 requires EPA to provide to the Office of Management and Budget, in a separately identified section of the preamble to the rule, a description of the extent of EPA's prior consultation with representatives of affected tribal governments, a summary of the nature of their concerns, and a statement supporting the need to issue the regulation. In addition, Executive Order 13084 requires EPA to develop an effective process permitting elected officials and other representatives of Indian tribal governments "to provide meaningful and timely input in the development of regulatory policies on matters that significantly or uniquely affect their communities." Today's rule does not significantly or uniquely affect the communities of Indian tribal governments. No tribal governments own or operate an affected source. Accordingly, the requirements of section 3(b) of Executive Order 13084 do not apply to this action.

E. Unfunded Mandates Reform Act

Title II of the Unfunded Mandates Reform Act of 1995 (UMRA), Pub. L. 104–4, establishes requirements for Federal agencies to assess the effects of their regulatory actions on State, local, and tribal governments and the private sector. Under section 202 of the UMRA, the EPA generally must prepare a written statement, including a cost-benefit analysis, for proposed and final rules with "Federal mandates" that may result in expenditures by State, local, and tribal governments, in aggregate, or by the private sector, of $100 million or more in any one year. Before promulgating an EPA rule for which a written statement is needed, section 205 of the UMRA generally requires the EPA to identify and consider a reasonable number of regulatory alternatives and adopt the least costly, most cost-effective, or least burdensome alternative that achieves the objectives of the rule. The provisions of section 205 do not apply when they are inconsistent with applicable law. Moreover, section 205 allows the EPA to adopt an alternative other than the least costly, most cost-effective, or least burdensome alternative if the Administrator publishes with the final rule an explanation why that alternative was not adopted. Before the EPA establishes any regulatory requirements that may significantly or uniquely affect small governments, including tribal governments, it must have developed under section 203 of the UMRA a small government agency plan. The plan must provide for notifying potentially affected small governments, enabling officials of affected small governments to have meaningful and timely input in the development of EPA regulatory proposals with significant Federal intergovernmental mandates, and informing, educating, and advising small governments on compliance with the regulatory requirements.

The EPA has determined that this rule does not contain a Federal mandate that may result in expenditures of $100 million or more for State, local, and tribal governments, in the aggregate, or the private sector in any 1 year. The maximum total annual cost of this rule for any year has been estimated to be less than $250,000. Thus, today's rule is not subject to the requirements of sections 202 and 205 of the UMRA. In addition, the EPA has determined that this rule contains no regulatory requirements that might significantly or uniquely affect small governments because it contains no requirements that apply to such governments or impose obligations upon them. Therefore, today's rule is not subject to the requirements of section 203 of the UMRA.

F. Regulatory Flexibility Act

As amended by the Small Business Regulatory Enforcement Fairness Act (SBREFA), the Regulatory Flexibility Act (RFA) generally requires an agency to conduct a regulatory flexibility analysis of any rule subject to notice and comment rulemaking requirements, as well as take other actions intended to minimize the rule's potential impact on small entities, unless the agency certifies that the rule will not have a significant economic impact on a substantial number of small entities. Small entities include small businesses, small not-for-profit enterprises, and small government jurisdictions.

The EPA has determined that none of the existing primary lead smelters are small entities, and has concluded that this proposed rule would not have a significant economic impact on a substantial number of small entities. Therefore, I certify that this action will not have a significant economic impact on a substantial number of small entities.

G. Paperwork Reduction Act

The information collection requirements in this rule will be submitted for approval to the Office of Management and Budget under the Paperwork Reduction Act, 44 U.S.C. 3501 *et seq.* An Information Collection Request (ICR) document has been prepared by EPA (ICR No. 1856.02) and a copy may be obtained from Sandy Farmer by mail at OPPE Regulatory Information Division; U.S. Environmental Protection Agency (2137); 401 M St., SW, Washington, DC 20460, by email at farmer.sandy@epamail.epa.gov, or by calling (202) 260–2740. A copy may also be downloaded off the internet at http://www.epa.gov/icr. The information requirements are not effective until OMB approves them.

The information requirements are based on notification, recordkeeping, and reporting requirements in the NESHAP General Provisions (40 CFR part 63, subpart A), which are mandatory for all operators subject to national emission standards. These recordkeeping and reporting requirements are specifically authorized by section 114 of the Act (42 U.S.C. §7414). All information submitted to the EPA pursuant to the recordkeeping and reporting requirements for which a claim of confidentiality is made is safeguarded according to Agency policies set forth in 40 CFR part 2, subpart B.

The rule would require maintenance inspections of the control devices but would not require any notifications or reports beyond those required by the General Provisions. The recordkeeping requirements require only the specific information needed to determine compliance.

The annual monitoring, reporting, and recordkeeping burden for this collection (averaged over the first 3 years after the effective date of the rule) is estimated to be 2,002 labor hours per year at a total annual cost of $114,900. This estimate includes a one-time performance test and report (with repeat tests where needed); one-time purchase and

installation of bag leak detection systems: one-time submission of a startup, shutdown, and malfunction plan with semiannual reports for any event when the procedures in the plan were not followed; semiannual excess emission reports; maintenance inspections; notifications; and recordkeeping. Total capital/startup costs associated with the monitoring requirements over the 3-year period of the ICR are estimated at $107,500, with operation and maintenance costs of $5,500/yr.

Burden means the total time, effort, or financial resources expended by persons to generate, maintain, retain, or disclose or provide information to or for a Federal agency. This includes the time needed to review instructions; develop, acquire, install, and utilize technology and systems for the purposes of collecting, validating, and verifying information, processing and maintaining information, and disclosing and providing information; adjust the existing ways to comply with any previously applicable instructions and requirements; train personnel to be able to respond to a collection of information; search data sources; complete and review the collection of information; and transmit or otherwise disclose the information.

An Agency may not conduct or sponsor, and a person is not required to respond to, a collection of information unless it displays a currently valid OMB control number. The OMB control numbers for EPA's regulations are listed in 40 CFR part 9 and 48 CFR chapter 15.

H. Submission to Congress and the General Accounting Office

The Congressional Review Act, 5 U.S.C. § 801 *et seq.*, as added by the Small Business Regulatory Enforcement Fairness Act of 1996, generally provides that before a rule may take effect, the agency promulgating the rule must submit a rule report, which includes a copy of the rule, to each House of the Congress and to the Comptroller General of the United States. The EPA will submit a report containing this rule and other required information to the U.S. Senate, the U.S. House of Representatives, and the Comptroller General of the United States prior to publication of the rule in the **Federal Register**. A major rule cannot take effect until 60 days after it is published in the **Federal Register**. This action is not a "major rule" as defined by 5 U.S.C. § 804(2).

I. National Technology Transfer and Advancement Act

Section 12(d) of the National Technology Transfer and Advancement Act of 1995 (NTTAA), Pub. L. No. 104-113, section 12(d) (15 U.S.C. 272 note), directs all Federal agencies to use voluntary consensus standards instead of government-unique standards in their regulatory activities unless to do so would be inconsistent with applicable law or otherwise impractical. Voluntary consensus standards are technical standards (e.g., material specifications, test method, sampling and analytical procedures, business practices, etc.) that are developed or adopted by one or more voluntary consensus standards bodies. Examples of organizations generally regarded as voluntary consensus standards bodies include the American Society for Testing and Materials (ASTM), the National Fire Protection Association (NFPA), and the Society of Automotive Engineers (SAE). The NTTAA requires Federal agencies like EPA to provide Congress, through OMB, with explanations when an agency decides not to use available and applicable voluntary consensus standards.

During this rulemaking the Agency searched for voluntary consensus standards that might be applicable. The search has identified no applicable voluntary standards. Accordingly, the NTTAA requirement to use applicable voluntary consensus standards does not apply to this rule.

As part of a larger effort, the EPA is undertaking a project to cross-reference existing voluntary consensus standards on testing, sampling, and analysis, with current and future EPA test methods. When completed, this project will assist the EPA in identifying potentially-applicable voluntary consensus standards which can then be evaluated for equivalency and applicability in determining compliance with future regulations.

J. Pollution Prevention Considerations

The Pollution Prevention Act of 1990 (42 U.S.C. 13101 et seq., Pub. L. 101-508, November 5, 1990) establishes the national policy of the United States for pollution prevention. This act declares that: (1) pollution should be prevented or reduced whenever feasible, (2) pollution that cannot be prevented or reduced should be recycled or reused in an environmentally-safe manner wherever feasible, (3) pollution that cannot be recycled or reused should be treated, and (4) disposal or release into the atmosphere should be chosen only if none of the other options is available.

The plant wide emission limit approach in this final rule promotes the use of pollution prevention alternatives by giving facilities full credit for source reduction in determining compliance with the emission limit. Furthermore, the focus of the fugitive dust requirements is on work practice and operating standards that reduce emission potential, rather than capture and treatment options.

K. Protection of Children From Environmental Health Risks and Safety Risk Under Executive Order 13045

Executive Order 13045: "Protection of Children from Environmental Health Risks and Safety Risks" (62 FR 19885, April 23, 1997) applies to any rule that: (1) is determined to be "economically significant" as defined under E.O. 12866, and (2) concerns an environmental health or safety risk that EPA has reason to believe may have a disproportionate effect on children. If the regulatory action meets both criteria, the Agency must evaluate the environmental health or safety effects of the planned rule on children, and explain why the planned regulation is preferable to other potentially effective and reasonably feasible alternatives considered by the Agency.

The EPA interprets Executive Order (E.O.) 13045 as applying only to those regulatory actions that are based on health or safety risks, such that the analysis required under section 5-501 of the E.O. has the potential to influence the regulation. This rule is not subject to E.O. 13045 because it does not establish an environmental standard intended to mitigate health or safety risks. Furthermore, this rule has been determined not to be "economically significant" as defined under E.O. 12866.

L. Judicial Review

Under section 307(b)(1) of the Act, judicial review of a NESHAP is available only by filing a petition for review in the U.S. Court of Appeals for the District of Columbia Circuit within 60 days of today's publication of this final rule. Under section 307(b)(2) of the Act, the requirements that are the subject of today's action may not be challenged later in civil or criminal proceedings brought by the EPA to enforce these requirements.

List of Subjects in 40 CFR Part 63

Environmental protection, Air pollution control, Hazardous substances, Reporting and recordkeeping requirements, Primary lead smelters.

Dated: May 13, 1999.

Carol M. Browner,

Administrator.

BILLING CODE 6560–50–P

For reasons set out in the preamble, 40 CFR part 63 is amended as follows:

PART 63—NATIONAL EMISSION STANDARDS FOR HAZARDOUS AIR POLLUTANTS FOR SOURCE CATEGORIES

1. The authority citation for part 63 continues to read as follows:

Authority: 42 U.S.C. 7401 *et seq.*

2. Part 63 is amended by adding subpart TTT, to read as follows:

Subpart TTT—National Emission Standards for Hazardous Air Pollutants for Primary Lead Smelting

Sec.
63.1541 Applicability.
63.1542 Definitions.
63.1543 Standards for process and process fugitive sources.
63.1544 Standards for fugitive dust sources.
63.1545 Compliance dates.
63.1546 Test methods.
63.1547 Monitoring requirements.
63.1548 Notification requirements.
63.1549 Recordkeeping and reporting requirements.
63.1550 Delegation of authority.

Subpart TTT—National Emission Standards for Hazardous Air Pollutants for Primary Lead Smelting

§ 63.1541 Applicability.

(a) The provisions of this subpart apply to the following affected sources at primary lead smelters: sinter machine, blast furnace, dross furnace, process fugitive sources, and fugitive dust sources. The provisions of this subpart do not apply to secondary lead smelters, lead refiners, or lead remelters.

(b) Table 1 of this subpart specifies the provisions of subpart A that apply and those that do not apply to owners and operators of primary lead smelters. The following sections of part 63 apply to this subpart as stated in subpart A and Table 1: § 63.1 (Applicability), § 63.2 (Definitions), § 63.3 (Units and abbreviations), § 63.4 (Prohibited activities and circumvention), § 63.5 (Construction and reconstruction), § 63.7 (Performance testing requirements), § 63.8 (Monitoring requirements), § 63.12 (State authority and delegations), § 63.13 (Addresses of State air pollution control agencies and EPA Regional Offices), § 63.14 (Incorporations by reference), and § 63.15 (Availability of information confidentiality). The following sections of part 63 apply to the extent specified in this subpart and Table 1: § 63.6 (Compliance with standards and maintenance requirements), § 63.9 (Notification requirements), and § 63.10 (Recordkeeping and reporting requirements). Section § 63.11 (Control device requirements) does not apply to this subpart.

§ 63.1542 Definitions.

Terms used in this subpart are defined in the Act, in subpart A of this part, or in this section as follows:

Bag leak detection system means a system that is capable of continuously monitoring relative particulate matter (dust) loadings in the exhaust of a baghouse in order to detect bag leaks and other upset conditions. A bag leak detection system includes, but is not limited to, an instrument that operates on triboelectric, light scattering, light transmittance, or other effect to continuously monitor relative particulate matter loadings.

Blast furnace means any reduction furnace to which sinter is charged and which forms separate layers of molten slag and lead bullion.

Building means a roofed and walled structure with limited openings to allow access and egress for people and vehicles.

Charging location means the physical opening through which raw materials are introduced into a sinter machine, blast furnace, or dross furnace.

Dross furnace means any smelting furnace to which drosses are charged and which chemically and physically separates lead from other impurities.

Drossing and refining kettle means an open-top vessel that is constructed of cast iron or steel and is indirectly heated from below and contains molten lead for the purpose of drossing, refining, or alloying lead. Included are pot furnaces, receiving kettles, and holding kettles.

Fugitive dust source means a stationary source of hazardous air pollutant emissions at a primary lead smelter resulting from the handling, storage, transfer, or other management of lead-bearing materials where the source is not associated with a specific process, process vent, or stack. Fugitive dust sources include roadways, storage piles, materials handling transfer points, and materials transport areas.

Furnace area means any area of a primary lead smelter in which a blast furnace or dross furnace is located.

Malfunction means any sudden, infrequent, and not reasonably preventable failure of air pollution control equipment, process equipment, or a process to operate in a normal or usual manner. Failures that are caused in part by poor maintenance or careless operation are not malfunctions.

Materials storage and handling area means any area of a primary lead smelter in which lead-bearing materials (including ore concentrate, sinter, granulated lead, dross, slag, and flue dust) are stored or handled between process steps, including areas in which materials are stored in piles, bins, or tubs, and areas in which material is prepared for charging to a sinter machine or smelting furnace.

Operating time means the period of time in hours that an affected source is in operation beginning at a startup and ending at the next shutdown.

Plant operating time means the period of time in hours that either a sinter machine or blast furnace is in operation.

Plant roadway means any area of a primary lead smelter that is subject to vehicle traffic, including traffic by fork lifts, front-end loaders, or vehicles carrying ore concentrates or cast lead ingots. Excluded from this definition are employee and visitor parking areas, provided they are not subject to traffic by vehicles carrying lead-bearing materials.

Primary lead smelter means any facility engaged in the production of lead metal from lead sulfide ore concentrates through the use of pyrometallurgical techniques.

Process fugitive source means a source of hazardous air pollutant emissions at a primary lead smelter that is associated with lead smelting or refining but is not the primary exhaust stream and is not a fugitive dust source. Process fugitive sources include sinter machine charging locations, sinter machine discharge locations, sinter crushing and sizing equipment, furnace charging locations, furnace taps, drossing kettles, and refining kettles.

Refining and casting area means any area of a primary lead smelter in which drossing or refining operations occur, or casting operations occur.

Shutdown means the cessation of operation of an affected source for any purpose.

Sinter machine means any device in which a lead sulfide ore concentrate charge is heated in the presence of air to eliminate sulfur contained in the charge and to agglomerate the charge into a hard porous mass called sinter.

Sinter machine area means any area of a primary lead smelter where a sinter machine, or sinter crushing and sizing equipment is located.

Sinter machine discharge end means the physical opening at the end of a sinter machine where the sinter exits the sinter machine.

Startup means the setting in operation of an affected source for any purpose.

Tapping location means the opening thru which lead and slag are removed from the furnace.

§ 63.1543 Standards for process and process fugitive sources.

(a) No owner or operator of any existing, new, or reconstructed primary lead smelter shall discharge or cause to be discharged into the atmosphere lead compounds in excess of 500 grams of lead per megagram of lead metal produced (1.0 pounds of lead per ton of lead metal produced) from the aggregation of emissions discharged from the air pollution control devices used to control emissions from the sources listed in paragraphs (a)(1) through (a)(9) of this section.

(1) Sinter machine;

(2) Blast furnace;

(3) Dross furnace;

(4) Dross furnace charging location;

(5) Blast furnace and dross furnace tapping location;

(6) Sinter machine charging location;

(7) Sinter machine discharge end;

(8) Sinter crushing and sizing equipment; and

(9) Sinter machine area.

(b) The process fugitive sources listed in paragraphs (a)(4) through (a)(8) of this section shall be equipped with a hood and shall be ventilated to a baghouse or equivalent control device. The hood design and ventilation rate shall be consistent with American Conference of Governmental Industrial Hygienists recommended practices.

(c) The sinter machine area shall be enclosed in a building that is ventilated to a baghouse or equivalent control device at a rate that maintains a positive in-draft through any doorway opening.

(d) Except as provided in paragraph (e) of this section, following the initial test to demonstrate compliance with paragraph (a) of this section, the owner or operator of a primary lead smelter shall conduct a compliance test for lead compounds on an annual basis (no later than 12 calendar months following any previous compliance test).

(e) If the three most recent compliance tests demonstrate compliance with the emission limit specified in paragraph (a) of this section, the owner or operator of a primary lead smelter shall be allowed up to 24 calendar months from the last compliance test to conduct the next compliance test for lead compounds.

(f) The owner or operator of a primary lead smelter shall maintain and operate each baghouse used to control emissions from the sources listed in paragraphs (a)(1) through (a)(9) of this section such that the alarm on a bag leak detection system required under § 63.1547(c)(9) does not sound for more than five percent of the total operating time in a 6-month reporting period.

(g) The owner or operator of a primary lead smelter shall record the date and time of a bag leak detection system alarm and initiate procedures to determine the cause of the alarm according to the corrective action plan required under § 63.1547(c)(9) within 1 hour of the alarm. The cause of the alarm shall be corrected as soon as practicable.

§ 63.1544 Standards for fugitive dust sources.

(a) Each owner or operator of a primary lead smelter shall prepare, and at all times operate according to, a standard operating procedures manual that describes in detail the measures that will be put in place to control fugitive dust emissions from the sources listed in paragraphs (a)(1) through (a)(5) of this section:

(1) Plant roadways;

(2) Material storage and handling area(s);

(3) Sinter machine area(s);

(4) Furnace area(s); and

(5) Refining and casting area(s).

(b) Not withstanding paragraph (c) of this section, the standard operating procedures manual shall be submitted to the Administrator or delegated authority for review and approval.

(c) Existing manuals that describe the measures in place to control fugitive dust sources required as part of a State implementation plan for lead shall satisfy the requirements of paragraph (a) of this section provided they address the sources listed in paragraphs (a)(1) through (a)(5) of this section.

§ 63.1545 Compliance dates.

(a) Each owner or operator of an existing primary lead smelter shall achieve compliance with the requirements of this subpart no later than May 4, 2001.

(b) Each owner or operator of a primary lead smelter that commences construction or reconstruction after April 17, 1998, shall achieve compliance with the requirements of this subpart by June 4, 1999 or upon startup of operations, whichever is later.

§ 63.1546 Test methods.

(a) The following procedure shall be used to determine compliance with the emissions standard for lead compounds under § 63.1543(a):

(1) The lead compound emission rate, in units of grams of lead per hour, for each source listed in § 63.1543(a)(1) through § 63.1543(a)(9) shall be determined according to the following test methods in appendix A of part 60 of this chapter:

(i) Method 1 shall be used to select the sampling port location and the number of traverse points.

(ii) Method 2 shall be used to measure volumetric flow rate.

(iii) Method 3 shall be used for gas analysis.

(iv) Method 4 shall be used to determine moisture content of the stack gas

(v) Method 12 shall be used to measure the lead emission rate of the stack gas. The minimum sample volume shall be 0.85 dry standard cubic meters (30 dry standard cubic feet) and the minimum sampling time shall be 60 minutes for each run. Three runs shall be performed and the average of the three runs shall be used to determine compliance.

(2) The lead production rate, in units of megagrams per hour, shall be determined based on production data for the previous 12 calendar months according to the procedures detailed in paragraphs (a)(2)(i) through (a)(2)(v) of this section:

(i) Total lead products production multiplied by the fractional lead content shall be determined in units of megragrams.

(ii) Total copper matte production multiplied by the fractional lead content shall be determined in units of megragrams.

(iii) Total copper speiss production multiplied by the fractional lead content shall be determined in units of megragrams.

(iv) Total lead production shall be determined by summing the values obtained in paragraphs (a)(2)(i) through (a)(2)(iii) of this section.

(v) The lead production rate, in units of megragrams per hours, shall be calculated based on the total lead production, as determined in accordance with paragraph (a)(2)(iv) of this section, divided by the total plant operating time, in hours, for the previous 12 months.

(3) The sum of lead compound emission rates for the sources in § 63.1543(a)((1) through (a)(9), as determined in accordance with paragraph (a)(1) of this section, shall be divided by the lead production rate, as determined in accordance with paragraph (a)(2)(v) of this section, to obtain a production-based, lead compound emission rate in units of grams of lead per megagram of lead metal produced. The production-based, lead compound emission rate shall be used to determine compliance with the

emissions standard for lead compounds under § 63.1543(a).

(b) Owner and operators shall perform an initial compliance test to demonstrate compliance with the sinter building in-draft requirements of § 63.1543(c) at each doorway opening in accordance with paragraphs (b)(1) through (b)(4) of this section.

(1) Use a propeller anemometer or equivalent device.

(2) Determine doorway in-draft by placing the anemometer in the plane of the doorway opening near its center.

(3) Determine doorway in-draft for each doorway that is open during normal operation with all remaining doorways in their customary position during normal operation.

(4) Do not determine doorway in-draft when ambient wind speed exceeds 2 meters per second.

§ 63.1547 Monitoring requirements.

(a) Owners and operators of primary lead smelters shall prepare, and at all times operate according to, a standard operating procedures manual that describes in detail the procedures for inspection, maintenance, and bag leak detection and corrective action for all baghouses that are used to control process, process fugitive, or fugitive dust emissions from any source subject to the lead emission standards in §§ 63.1543 and 63.1544, including those used to control emissions from general ventilation systems.

(b) The standard operating procedures manual for baghouses required by paragraph (a) of this section shall be submitted to the Administrator or delegated authority for review and approval.

(c) The procedures specified in the standard operating procedures manual for inspections and routine maintenance shall, at a minimum, include the requirements of paragraphs (c)(1) through (c)(9) of this section.

(1) Daily monitoring of pressure drop across each baghouse cell to ensure pressure drop is within the normal operating range identified in the standard operating procedures manual.

(2) Weekly confirmation that dust is being removed from hoppers through visual inspection or equivalent means of ensuring the proper functioning of removal mechanisms.

(3) Daily check of compressed air supply for pulse-jet baghouses.

(4) An appropriate methodology for monitoring cleaning cycles to ensure proper operation.

(5) Monthly check of bag cleaning mechanisms for proper functioning through visual inspection or equivalent means.

(6) Quarterly visual check of bag tension on reverse air and shaker-type baghouses to ensure that bags are not kinked (kneed or bent) or laying on their sides. Such checks are not required for shaker-type baghouses using self-tensioning (spring loaded) devices.

(7) Quarterly confirmation of the physical integrity of the baghouse through visual inspection of the baghouse interior for air leaks.

(8) Quarterly inspection of fans for wear, material buildup, and corrosion through visual inspection, vibration detectors, or equivalent means.

(9) Except as provided in paragraph (h) of this section, continuous operation of a bag leak detection system.

(d) The procedures specified in the standard operating procedures manual for maintenance shall, at a minimum, include a preventative maintenance schedule that is consistent with the baghouse manufacturer's instructions for routine and long-term maintenance.

(e) The bag leak detection system required by paragraph (c)(9) of this section shall meet the specifications and requirements of (e)(1) through (e)(8) of this section.

(1) The bag leak detection system must be certified by the manufacturer to be capable of detecting particulate matter emissions at concentrations of 10 milligram per actual cubic meter (0.0044 grains per actual cubic foot) or less.

(2) The bag leak detection system sensor must provide output of relative particulate matter loadings, and the owner or operator shall continuously record the output from the bag leak detection system.

(3) The bag leak detection system must be equipped with an alarm system that will sound when an increase in relative particulate loading is detected over a preset level, and the alarm must be located such that it can be heard by the appropriate plant personnel.

(4) Each bag leak detection system that works based on the triboelectric effect shall be installed, calibrated, and maintained in a manner consistent with guidance provided in the U.S. Environmental Protection Agency guidance document "Fabric Filter Bag Leak Detection Guidance" (EPA–454/R–98–015). Other bag leak detection systems shall be installed, calibrated, and maintained in a manner consistent with the manufacturer's written specifications and recommendations.

(5) The initial adjustment of the system shall, at a minimum, consist of establishing the baseline output by adjusting the sensitivity (range) and the averaging period of the device, and establishing the alarm set points and the alarm delay time.

(6) Following initial adjustment, the owner or operator shall not adjust the sensitivity or range, averaging period, alarm set points, or alarm delay time, except as detailed in the approved SOP required under paragraph (a) of this section. In no event shall the sensitivity be increased by more than 100 percent or decreased more than 50 percent over a 365-day period unless a responsible official certifies that the baghouse has been inspected and found to be in good operating condition.

(7) For negative pressure, induced air baghouses, and positive pressure baghouses that are discharged to the atmosphere through a stack, the bag leak detector must be installed downstream of the baghouse and upstream of any wet acid gas scrubber.

(8) Where multiple detectors are required, the system's instrumentation and alarm may be shared among detectors.

(f) The standard operating procedures manual required by paragraph (a) of this section shall include a corrective action plan that specifies the procedures to be followed in the event of a bag leak detection system alarm. The corrective action plan shall include, at a minimum, procedures to be used to determine the cause of an alarm, as well as actions to be taken to minimize emissions, which may include, but are not limited to, the following.

(1) Inspecting the baghouse for air leaks, torn or broken bags or filter media, or any other condition that may cause an increase in emissions.

(2) Sealing off defective bags or filter media.

(3) Replacing defective bags or filter media, or otherwise repairing the control device.

(4) Sealing off a defective baghouse compartment.

(5) Cleaning the bag leak detection system probe, or otherwise repairing the bag leak detection system.

(6) Shutting down the process producing the particulate emissions.

(g) The percentage of total operating time the alarm on the bag leak detection system sounds in a 6-month reporting period shall be calculated in order to determine compliance with the five percent operating limit in § 63.1543(f). The percentage of time the alarm on the bag leak detection system sounds shall be determined according to paragraphs (g)(1) through (g)(5) of this section.

(1) Alarms that occur due solely to a malfunction of the bag leak detection system shall not be included in the calculation.

(2) Alarms that occur during startup, shutdown, or malfunction shall not be included in the calculation if the

condition is described in the startup, shutdown, and malfunction plan and the owner or operator follows all the procedures in the plan defined for this condition.

(3) For each alarm where the owner or operator initiates procedures to determine the cause of an alarm within 1 hour of the alarm, 1 hour of alarm time shall be counted.

(4) For each alarm where the owner or operator does not initiate procedures to determine the cause of the alarm within 1 hour of the alarm, alarm time will be counted as the actual amount of time taken by the owner or operator to initiate procedures to determine the cause of the alarm.

(5) The percentage of time the alarm on the bag leak detection system sounds shall be calculated as the ratio of the sum of alarm times to the total operating time multiplied by 100.

(h) Baghouses equipped with HEPA filters as a secondary filter used to control process or process fugitive sources subject to the lead emission standards in § 63.1543 are exempt from the requirement in § 63.1543(c)(9) to be equipped with a bag leak detector. The owner or operator of an affected source that uses a HEPA filter shall monitor and record the pressure drop across the HEPA filter system daily. If the pressure drop is outside the limit(s) specified by the filter manufacturer, the owner or operator must take appropriate corrective measures, which may include, but not be limited to, the following:

(1) Inspecting the filter and filter housing for air leaks and torn or broken filters.

(2) Replacing defective filter media, or otherwise repairing the control device.

(3) Sealing off a defective control device by routing air to other control devices.

(4) Shutting down the process producing the particulate emissions.

(i) Owners and operators shall monitor sinter machine building in-draft to demonstrate continued compliance with the operating standard specified in § 63.1543(c) in accordance with either paragraph (i)(1), (i)(2), or (i)(3) of this section.

(1) Owners and operators shall check and record on a daily basis doorway in-draft at each doorway in accordance with the methodology specified in § 63.1546(b).

(2) Owners and operators shall establish and maintain baseline ventilation parameters which result in a positive in-draft according to paragraphs (i)(2)(i) through (i)(2)(iv) of this section.

(i) Owners and operators shall install, calibrate, maintain, and operate a monitoring device that continuously records the actual volumetric flow rate through each separately ducted hood; or install, calibrate, maintain, and operate a monitoring device that continuously records the volumetric flow rate at the control device inlet of each exhaust system ventilating the building. The flow rate monitoring device(s) can be installed in any location in the exhaust duct such that reproducible flow rate monitoring will result. The flow rate monitoring device(s) shall have an accuracy of plus or minus 10 percent over its normal operating range and shall be calibrated according to manufacturer's instructions.

(ii) During the initial demonstration of sinter building in-draft, and at any time the owner or operator wishes to re-establish the baseline ventilation parameters, the owner or operator shall continuously record the volumetric flow rate through each separately ducted hood, or continuously record the volumetric flow rate at the control device inlet of each exhaust system ventilating the building and record exhaust system damper positions. The owner or operator shall determine the average volumetric flow rate(s) corresponding to the period of time the in-draft compliance determinations are being conducted.

(iii) The owner or operator shall maintain the volumetric flow rate(s) at or above the value(s) established during the most recent in-draft determination at all times the sinter machine is in operation. Volumetric flow rate(s) shall be calculated as a 15-minute average.

(iv) If the volumetric flow rate is monitored at the control device inlet, the owner or operator shall check and record damper positions daily to ensure they are in the positions they were in during the most recent in-draft determination.

(3) An owner or operator may request an alternative monitoring method by following the procedures and requirements in § 63.8(f) of the General Provisions.

§ 63.1548 Notification requirements.

(a) The owner or operator of a primary lead smelter shall comply with all of the notification requirements of § 63.9 of subpart A, General Provisions.

(b) The owner or operator of a primary lead smelter shall submit the fugitive dust control standard operating procedures manual required under § 63.1544(a) and the standard operating procedures manual for baghouses required under § 63.1547(a) to the Administrator or delegated authority along with a notification that the smelter is seeking review and approval of these plans and procedures. Owners or operators of existing primary lead smelters shall submit this notification no later than November 6, 2000. The owner or operator of a primary lead smelter that commences construction or reconstruction after April 17, 1998, shall submit this notification no later than 180 days before startup of the constructed or reconstructed primary lead smelter, but no sooner than September 2, 1999.

§ 63.1549 Recordkeeping and reporting requirements.

(a) The owner or operator of a primary lead smelter shall comply with all of the recordkeeping requirements of § 63.10 of subpart A, General Provisions.

(b) In addition to the general records required by paragraph (a) of this section, each owner or operator of a primary lead smelter shall maintain for a period of 5 years, records of the information listed in paragraphs (b)(1) through (b)(8) of this section.

(1) Production records of the weight and lead content of lead products, copper matte, and copper speiss.

(2) Records of the bag leak detection system output.

(3) An identification of the date and time of all bag leak detection system alarms, the time that procedures to determine the cause of the alarm were initiated, the cause of the alarm, an explanation of the actions taken, and the date and time the cause of the alarm was corrected.

(4) Any recordkeeping required as part of the practices described in the standard operating procedures manual required under § 63.1544(a) for the control of fugitive dust emissions.

(5) Any recorkeeping required as part of the practices described in the standard operating procedures manual for baghouses required under § 63.1547(a).

(6) If an owner or operator chooses to demonstrate continuous compliance with the sinter building in-draft requirement under § 63.1543(c) by employing the method allowed in § 63.1546(i)(1), the records of the daily doorway in-draft checks, an identification of the periods when there was not a positive in-draft, and an explanation of the corrective actions taken.

(7) If an owner or operator chooses to demonstrate continuous compliance with the sinter building in-draft requirement under § 63.1543(c) by employing the method allowed in § 63.1546(i)(2), the records of the output from the continuous volumetric flow monitor(s), an identification of the periods when the 15-minute volumetric

flow rate dropped below the minimum established during the most recent in-draft determination, and an explanation of the corrective actions taken.

(8) If an owner or operator chooses to demonstrate continuous compliance with the sinter building in-draft requirement under § 63.1543(c) by employing the method allowed in § 63.1546(i)(2), and volumetric flow rate is monitored at the baghouse inlet, records of the daily checks of damper positions, an identification of the days that the damper positions were not in the positions established during the most recent in-draft determination, and an explanation of the corrective actions taken.

(c) Records for the most recent 2 years of operation must be maintained on site. Records for the previous 3 years may be maintained off site.

(d) The owner or operator of a primary lead smelter shall comply with all of the reporting requirements of § 63.10 of subpart A, General Provisions.

(e) In addition to the information required under § 63.10 of the General Provisions, the owner or operator shall provide semi-annual reports containing the information specified in paragraphs (e)(1) through (e)(7) of this section to the Administrator or designated authority.

(1) The reports shall include records of all alarms from the bag leak detection system specified in § 63.1547(e).

(2) The reports shall include a description of the actions taken following each bag leak detection system alarm pursuant to § 63.1547(f).

(3) The reports shall include a calculation of the percentage of time the alarm on the bag leak detection system sounded during the reporting period pursuant to § 63.1547(g).

(4) If an owner or operator chooses to demonstrate continuous compliance with the sinter building in-draft requirement under § 63.1543(c) by employing the method allowed in § 63.1546(i)(1), the reports shall contain an identification of the periods when there was not a positive in-draft, and an explanation of the corrective actions taken.

(5) If an owner or operator chooses to demonstrate continuous compliance with the sinter building in-draft requirement under § 63.1543(c) by employing the method allowed in § 63.1546(i)(2), the reports shall contain an identification of the periods when the 15-minute volumetric flow rate(s) dropped below the minimum established during the most recent in-draft determination, and an explanation of the corrective actions taken.

(6) If an owner or operator chooses to demonstrate continuous compliance with the sinter building in-draft requirement under § 63.1543(c) by employing the method allowed in § 63.1546(i)(2), and volumetric flow rate is monitored at the baghouse inlet, the reports shall contain an identification of the days that the damper positions were not in the positions established during the most recent in-draft determination, and an explanation of the corrective actions taken.

(7) The reports shall contain a summary of the records maintained as part of the practices described in the standard operating procedures manual for baghouses required under § 63.1547(a), including an explanation of the periods when the procedures were not followed and the corrective actions taken.

(8) The reports shall contain a summary of the fugitive dust control measures performed during the required reporting period, including an explanation of any periods when the procedures outlined in the standard operating procedures manual required by § 63.1544(a) were not followed and the corrective actions taken. The reports shall not contain copies of the daily records required to demonstrate compliance with the requirements of the standard operating procedures manuals required under §§ 63.1544(a) and § 63.1547(a).

§ 63.1550 Delegation of authority

(a) In delegating implementation and enforcement authority to a State under section 112(l) of the act, the authorities contained in paragraph (b) of this section shall be retained by the Administrator and not transferred to a State.

(b) Authorities which will not be delegated to States: no restrictions.

TABLE 1 OF SUBPART TTT—GENERAL PROVISIONS APPLICABILITY TO SUBPART TTT

Reference	Applies to subpart TTT	Comment
§ 63.1	Yes	
§ 63.2	Yes	
§ 63.3	Yes	
§ 63.4	Yes	
§ 63.5	Yes	
§ 63.6(a), (b), (c), (e), (f), (g), (i) and (j)	Yes	
§ 63.6(d) and (h)	No	No opacity limits in rule.
§ 63.7	Yes	
§ 63.8	Yes	
§ 63.9 (a), (b), (c), (d), (e), (g), (h)(1) through (3), (h)(5) and (6), (i) and (j).	Yes	
§ 63.9(f) and (h)(4)	No	No opacity or visible emission limits in rule.
§ 63.10	Yes	
§ 63.11	No	Flares will not be used to comply with the emission limits.
§ 63.12 through 63.15	Yes	

[FR Doc. 99–12757 Filed 6–3–99; 8:45 am]
BILLING CODE 6560–50–M

may be significantly or uniquely impacted by the rule.

EPA has determined that the approval action promulgated does not include a Federal mandate that may result in estimated annual costs of $100 million or more to either state, local, or tribal governments in the aggregate, or to the private sector. This Federal action approves pre-existing requirements under state or local law, and imposes no new requirements. Accordingly, no additional costs to state, local, or tribal governments, or to the private sector, result from this action.

G. Submission to Congress and the Comptroller General

The Congressional Review Act, 5 U.S.C. 801 *et seq.*, as added by the Small Business Regulatory Enforcement Fairness Act of 1996, generally provides that before a rule may take effect, the agency promulgating the rule must submit a rule report, which includes a copy of the rule, to each House of the Congress and to the Comptroller General of the United States. EPA will submit a report containing this rule and other required information to the U.S. Senate, the U.S. House of Representatives, and the Comptroller General of the United States prior to publication of the rule in the **Federal Register**. This rule is not a "major rule" as defined by 5 U.S.C. 804(2).

H. Petitions for Judicial Review

Under section 307(b)(1) of the Clean Air Act, petitions for judicial review of this Pennsylvania I/M approval action must be filed in the United States Court of Appeals for the appropriate circuit by August 9, 1999. Filing a petition for reconsideration by the Administrator of this final rule does not affect the finality of this rule for the purposes of judicial review nor does it extend the time within which a petition for judicial review may be filed, and shall not postpone the effectiveness of such rule or action. This action may not be challenged later in proceedings to enforce its requirements. (See section 307(b)(2).)

List of Subjects in 40 CFR Part 52

Environmental protection, Air pollution control, Carbon monoxide, Hydrocarbons, Nitrogen dioxide, Ozone, Reporting and recordkeeping requirements.

Dated: May 27, 1999.

W. Michael McCabe,

Regional Administrator, Region III.

40 CFR Part 52 is amended as follows:

PART 52—[AMENDED]

1. The authority citation for part 52 continues to read as follows:

Authority: 42 U.S.C. 7401 *et seq.*

Subpart NN—Pennsylvania

2. Section 52.2026 is amended by revising the introductory paragraph to read as follows:

§ 52.2026 Conditional approval.

The Commonwealth of Pennsylvania's March 27, 1996 submittal of its enhanced motor vehicle emissions inspection and maintenance (I/M) program; as amended on June 27, 1996, July 29, 1996, November 1, 1996, November 13, 1997, February 24, 1998, and August 21, 1998; is conditionally approved pending satisfaction of paragraph (a)(2) of this subsection.

* * * * *

(a) * * *

3. Section 52.2026 is further amended by removing and reserving paragraphs (b) (1), (5), (7), (8), (9), (10), and (14).

[FR Doc. 99-14357 Filed 6-7-99; 8:45 am]

BILLING CODE 6560-50-U

ENVIRONMENTAL PROTECTION AGENCY

40 CFR Part 63

[AD-FRL-6355-5]

RIN 2060-AH47

National Emission Standards for Hazardous Air Pollutants Emissions: Group IV Polymers and Resins

AGENCY: Environmental Protection Agency (EPA).

ACTION: Direct final rule; extension of compliance.

SUMMARY: The EPA is taking direct final action to extend certain compliance dates contained in National Emissions Standards for Hazardous Air Pollutants Emissions: Group IV Polymers and Resins. The revisions concern extending the compliance dates specified in 40 CFR 63.1311(b) and (d)(6) for polyethylene terephthalate (PET) affected sources. We are approving these compliance extensions pursuant to Clean Air Act section 301(a)(1) to complete reconsideration of equipment leaks provisions and any necessary revision to the rule.

DATES: The direct final rule is effective on August 9, 1999, without further notice, unless the EPA receives adverse comment by July 8, 1999. If we receive such comment, we will publish a timely withdrawal in the **Federal Register** informing the public that this rule will not take effect.

ADDRESSES: *Comments.* Comments should be submitted (in duplicate, if possible) to: Air and Radiation Docket and Information Center (6102), Attention Docket Number A-92-45 (see docket section below), Room M-1500, U.S. Environmental Protection Agency, 401 M Street, SW, Washington, D.C. 20460. The EPA requests that a separate copy also be sent to the contact person listed below. Comments and data may also be submitted electronically by following the instructions provided in the **SUPPLEMENTARY INFORMATION** section. No Confidential Business Information (CBI) should be submitted through electronic mail.

Docket. The official record for this rulemaking has been established under docket number A-92-45 (including comments and data submitted electronically as described below). A public version of this record, including printed, paper versions of electronic comments and data, which does not include any information claimed as CBI, is available for inspection between 8 a.m. and 4 p.m., Monday through Friday, excluding legal holidays. The official rulemaking record is located at the address in the **ADDRESSES** section. Alternatively, a docket index, as well as individual items contained within the docket, may be obtained by calling (202) 260-7548 or (202) 260-7549. A reasonable fee may be charged for copying.

FOR FURTHER INFORMATION CONTACT: Mr. Keith Barnett, Emission Standards Division (MD-13), U.S. Environmental Protection Agency, Office of Air Quality Planning and Standards, Research Triangle Park, North Carolina 27711, telephone number (919) 541-5605.

SUPPLEMENTARY INFORMATION:

Electronic Filing

Electronic comments and data can be sent directly to the EPA at: a-and-r-docket@epamail.epa.gov. Electronic comments and data must be submitted as an ASCII file avoiding the use of special characters and any form of encryption. Comments and data will also be accepted on diskette in WordPerfect 5.1 file format or ASCII file format. All comments and data in electronic form must be identified by the docket number A-92-45. Electronic comments may be filed online at many Federal Depository Libraries.

Electronic Availability

This document is available in docket number A-92-45 or by request from the

EPA's Air and Radiation Docket and Information Center (see **ADDRESSES**), and is available for downloading from the Technology Transfer Network (TTN), the EPA's electronic bulletin board system. The TTN provides information and technology exchange in various areas of emissions control. The service is free, except for the cost of a telephone call. Dial (919) 541–5742 for up to a 14,000 baud per second modem. For further information, contact the TTN HELP line at (919) 541–5348, from 1:00 p.m. to 5:00 p.m., Monday through Friday, or access the TTN web site at: http://www.epa.gov/ttn/oarpg.

Regulated entities.

Regulated categories and entities include:

Category	Examples of regulated entities
Industry	Facilities that produce PET.

This table is not intended to be exhaustive, but rather provides a guide for readers regarding entities regulated by the NESHAP addressed in this direct final rule. If you have questions regarding the applicability of the NESHAP addressed in this direct final rule to a particular entity, consult the person listed in the preceding **FOR FURTHER INFORMATION CONTACT** section.

The EPA is publishing this rule without prior proposal because we view this as a noncontroversial amendment and anticipate no adverse comment. However, in the "Proposed Rule" section of today's **Federal Register** publication, we are publishing a separate document that will serve as the proposal to approve the extension of the compliance dates specified in 40 CFR 63.1311 (b) and (d)(6) for polyethylene terephthalate (PET) affected sources if adverse comments are filed. This rule will be effective on August 9, 1999, without further notice, unless we receive adverse comment by July 8, 1999. If the EPA receives adverse comment, we will publish a timely withdrawal in the **Federal Register** informing the public that the rule will not take effect. We will address all public comments in a subsequent final rule based on the proposed rule. We will not institute a second comment period on this action. Any parties interested in commenting must do so at this time.

The information presented in this preamble is organized as follows:

I. Background and Rationale
II. Authority for Extension of the Compliance Date and Reconsideration
III. Impacts
IV. Administrative Requirements

I. Background and Rationale

On September 12, 1996, the EPA promulgated 40 CFR part 63, subpart JJJ—Group IV Polymers and Resins NESHAP (61 FR 48208). 40 CFR 63.1331 establishes standards for equipment leaks based on the equipment leaks provisions from the Hazardous Organic NESHAP (HON), 40 CFR part 63, subpart H. The final rule required existing sources to comply with 40 CFR 63.1331 beginning March 12, 1997 (*see* 40 CFR 63.1311(d)).

Subsequent to the promulgation of the Group IV Polymers and Resins rule, the EPA promulgated changes to the equipment leak provisions of the HON. In addition, a petition was submitted to the EPA requesting reconsideration of the equipment leak provisions of the rule affecting PET facilities. As a result, the compliance date for 40 CFR 63.1331 for existing PET facilities has twice been extended and is currently September 12, 1999, which is three years after promulgation of the rule. After the last compliance extension, the effective date of the Group IV Polymers and Resins rule was changed to February 27, 1998 to comply with sections 801 and 802 of the Congressional Review Act.

The petition was submitted to the EPA by two PET manufacturers requesting reconsideration of the technical basis for estimates of emissions, emission reduction, and costs for equipment leaks emission control at PET affected sources. A second petition was subsequently filed by a third PET manufacturer requesting the same relief. The petitions summarize new information claimed by the petitioners to "confirm the petitioners' comments made during the public comment period questioning the validity of the EPA's predictions of the costs and cost effectiveness of the leak detection and repair program." This new information, which the EPA did not have prior to promulgation of the final rule, includes data related to emissions and costs. The EPA elected to act upon the petitioners' requests to reconsider the equipment leak provisions of the 1996 rule, as it applies to PET affected sources.

The EPA's reconsideration has created uncertainty with regard to compliance requirements for the PET equipment leak provisions. Furthermore, the EPA's reconsideration has led the Agency to publish in the "Proposed Rules" section of today's **Federal Register** publication a proposal to deny the petitions. The EPA will consider public comments on this proposed denial and publish a final action on the petitions. Therefore, this period of uncertainty will continue until the EPA publishes a final decision on the petitions. For these reasons, the EPA is providing an extension of the compliance dates associated with the provisions of 40 CFR 63.1331, which regulate equipment leaks for PET affected sources, until such time as the EPA is able to take final action on the petitions for reconsideration. This extension applies to affected sources in the following regulated subcategories: (1) PET using a batch dimethyl terephthalate process; (2) PET using a continuous dimethyl terephthalate process; (3) PET using a batch terephthalic acid process; and (4) PET using a continuous terephthalic acid process. It does not affect any other provisions of the Polymers and Resins Group IV rule, or any other source categories or subcategories.

By this action the EPA is providing, pursuant to Clean Air Act section 301(a)(1), an extension of the compliance dates specified in 40 CFR 63.1311(b) and (d)(6), only as necessary to complete reconsideration and potential revision of the rule. The EPA intends to complete its reconsideration of the rule and, following the notice and comment procedures of Clean Air Act section 307(d), take appropriate action as expeditiously as possible. The EPA does not believe this extension will, as a practical matter, impact the overall effectiveness of the rule. The EPA will seek to ensure that the affected parties are not unduly prejudiced by the EPA's reconsideration. The compliance date will be extended until February 27, 2001 which is the latest compliance date permitted by section 112 of the Clean Air Act (in the absence of a one year extension).

II. Authority for Extension of the Compliance Date and Reconsideration

The extension of the compliance dates specified in 40 CFR 63.1311(b) and (d)(6) for PET affected sources is being undertaken pursuant to Clean Air Act section 301(a)(1). Reconsideration is being undertaken pursuant to Clean Air Act section 307(d)(7)(B). Reconsideration is appropriate if the grounds for an objection arose after the period for public comment and if the objection is of central relevance to the outcome of the rule.

The grounds for reconsideration of this rule arose after the public comment period. The emissions and cost data which serve as the bases for the summary of data provided by the petitioners became available after the close of the comment period on the rule. Therefore, the EPA is extending the

compliance dates specified in 40 CFR 63.1311(b) and (d)(6) for PET affected sources in order to allow time to reconsider the provisions of 40 CFR 63.1331 as these provisions pertain to PET affected sources.

III. Impacts

The extension of the compliance date for equipment leaks at PET affected sources will not affect the eventual annual estimated emissions reduction or the control cost for the rule.

IV. Administrative

A. Paperwork Reduction Act

For the Group IV Polymers and Resins NESHAP, the information collection requirements were submitted to the Office of Management and Budget (OMB) under the *Paperwork Reduction Act*. The OMB approved the information collection requirements and assigned OMB control number 2060–0351. An Agency may not conduct or sponsor, and a person is not required to respond to, a collection of information unless it displays a currently valid OMB control number. The OMB control numbers for the EPA's regulations are listed in 40 CFR part 9 and 48 CFR Chapter 15. The EPA has amended 40 CFR 9.1, to indicate the information collection requirements contained in the Group IV Polymers and Resins NESHAP.

This action has no impact on the information collection burden estimates made previously. Therefore, the ICR has not been revised.

B Executive Order 12866—Regulatory Planning and Review

Under Executive Order 12866 (58 FR 51735, October 4, 1993), the EPA must determine whether the regulatory action is "significant" and therefore subject to review by OMB on the basis of the requirements of the Executive Order in addition to its normal review requirements. The Executive Order defines "significant regulatory action" as one that is likely to result in a rule that may:

(1) Have an annual effect on the economy of $100 million or more or adversely affect in a material way the economy, a sector of the economy, productivity, competition, jobs, the environment, public health or safety, or State, local or Tribal governments or communities;

(2) Create a serious inconsistency or otherwise interfere with an action taken or planned by another agency;

(3) Materially alter the budgetary impact of entitlements, grants, user fees, or loan programs, or the rights and obligations of recipients thereof; or

(4) Raise novel legal or policy issues arising out of legal mandates, the President's priorities, or the principles set forth in the Executive Order.

Today's action does not fall within any of the four categories described above. Instead, the direct final rule will provide an extension of the compliance dates specified in 40 CFR 63.1311(b) and (d)(6) for PET affected sources. The direct final rule does not add any additional control requirements. Therefore, this direct final rule was classified "non-significant" under Executive Order 12866 and was not required to be reviewed by OMB.

C. Regulatory Flexibility

The EPA has determined that it is not necessary to prepare a regulatory flexibility analysis in connection with this final rule. The EPA has also determined that this rule will not have a significant impact on a substantial number of small entities because the compliance extension would not impose any economic burden on any regulated entities.

D. Unfunded Mandates Reform Act

Title II of the Unfunded Mandates Reform Act of 1995 (UMRA), Public Law 104–4, establishes requirements for Federal agencies to assess the effects of their regulatory actions on State, local and tribal governments and the private sector. Under section 202 of the UMRA, the EPA generally must prepare a written statement, including a cost-benefit analysis, for proposed and final rules with "Federal mandates" that may result in expenditures to State, local and tribal governments, in the aggregate, or to the private sector of $100 million or more in any one year. Before promulgating an EPA rule for which a written statement is needed, section 205 of the UMRA generally requires the EPA to identify and consider a reasonable number of regulatory alternatives and adopt the least costly, most cost-effective or least burdensome alternative that achieves the objects of the rule. The provisions of section 205 do not apply when they are inconsistent with applicable law. Moreover, section 205 allows the EPA to adopt an alternative other than the least costly, most cost-effective or least burdensome alternative if the Administrator publishes with the final rule an explanation of why that alternative was not adopted. Before the EPA establishes any regulatory requirements that may significantly or uniquely affect small governments, including tribal governments, it must have developed under section 203 of the UMRA a small government agency plan. The plan must provide for notifying potentially affected small governments, enabling officials of affected small governments to have meaningful and timely input in the development of EPA regulatory proposals with significant Federal intergovernmental mandates, and informing, educating, and advising small governments on compliance with the regulatory requirements.

Today's direct final rule contains no Federal mandates (under the regulatory provisions of Title II of the UMRA) for State, local or tribal governments or the private sector. Instead, this rule provides additional time to comply with some requirements of the Group IV Polymers and Resins NESHAP. In any event, the EPA has determined that this rule does not contain a Federal mandate that may result in expenditure of $100 million or more for State, local and tribal governments, in the aggregate, or the private sector, in any one year. Thus today's direct final rule is not subject to the requirements of sections 202 and 205 of the UMRA.

We also have determined that this rule contains no regulatory requirements that might significantly or uniquely affect small governments. This rule does not impose any enforceable duties on small governments, i.e., they own or operate no sources subject to this rule and therefore are not required to purchase control systems to meet the requirements of this rule.

E. Executive Order 13045—Protection of Children From Environmental Health Risks and Safety Risks

Executive Order 13045, entitled Protection of Children from Environmental Health Risks and Safety Risks (62 FR 19885, April 23, 1997), applies to any rule that (1) is determined to be "economically significant" as defined under Executive Order 12866, and (2) concerns an environmental health or safety risk that the EPA has reason to believe may have a disproportionate effect on children. If the regulatory action meets both criteria, the Agency must evaluate the environmental health or safety aspects of the planned rule on children, and explain why the planned regulation is preferable to other potentially effective and reasonably feasible alternatives considered by the Agency.

The EPA interprets E.O. 13045 as applying only to those regulatory actions that are based on health or safety risks, such that the analysis required under section 5–501 of the Order has the potential to influence the regulation. This final action is not subject to the Executive Order 13045 because it is not an economically significant regulatory action as defined in E.O. 12866, and it

is based on technology performance and not on health or safety risks.

F. National Technology Transfer and Advancement Act

Section 12 of the National Technology Transfer and Advancement Act of 1995 (NTTAA) requires federal agencies to evaluate existing technical standards when developing new regulations. To comply with the NTTAA, the EPA must consider and use "voluntary consensus standards" (VCS) if available and applicable when developing programs and policies unless doing so would be inconsistent with applicable law or otherwise impractical.

The EPA believes that the use of VCS in this direct final rule is impractical. The compliance extension of the Group IV Polymers and Resins NESHAP is merely a procedural action that does not require sources to take substantive steps that lend themselves to VCS.

G. Executive Order 12875—Enhancing Intergovernmental Partnership

Under Executive Order 12875, the EPA may not issue a regulation that is not required by statute and that creates a mandate upon a State, local or tribal government, unless the Federal government provides the funds necessary to pay the direct compliance costs incurred by those governments, or the EPA consults with those governments. If the EPA complies by consulting, Executive Order 12875 requires the EPA to provide to the Office of Management and Budget a description of the extent of the EPA's prior consultation with representatives of affected State, local and tribal governments, the nature of their concerns, copies of any written communications from the governments, and a statement supporting the need to issue the regulation. In addition, Executive Order 12875 requires the EPA to develop an effective process permitting elected officials and other representatives of State, local and tribal governments "to provide meaningful and timely input in the development of regulatory proposals containing significant unfunded mandates."

Today's direct final rule does not create a mandate on State, local or tribal governments. The direct final rule does not impose any enforceable duties on these entities. Rather, the rule extends certain regulatory requirements. Accordingly, the requirements of section 1(a) of Executive Order 12875 do not apply to this rule.

H. Executive Order 13084—Consultation and Coordination With Indian Tribal Governments

Under Executive Order 13084, the EPA may not issue a regulation that is not required by statute, that significantly or uniquely affects the communities of Indian tribal governments, and that imposes substantial direct compliance costs on those communities, unless the Federal government provides the funds necessary to pay the direct compliance costs incurred by the tribal governments, or the EPA consults with those governments. If the EPA complies by consulting, Executive Order 13084 requires the EPA to provide to the Office of Management and Budget, in a separately identified section of the preamble to the rule, a description of the extent of the EPA's prior consultation with representatives of affected tribal governments, a summary of the nature of their concerns, and a statement supporting the need to issue the regulation. In addition, Executive Order 13084 requires the EPA to develop an effective process permitting elected officials and other representatives of Indian tribal governments "to provide meaningful and timely input in the development of regulatory policies on matters that significantly or uniquely affect their communities."

Today's direct final rule does not significantly or uniquely affect the communities of Indian tribal governments. This direct final rule imposes no enforceable duties on these entities. Rather, the rule extends certain regulatory requirements. Accordingly, the requirements of section 3(b) of Executive Order 13084 do not apply to this rule.

I. Submission to Congress and the Comptroller General

The Congressional Review Act, 5 U.S.C. 801 *et seq.*, as amended by the Small Business Regulatory Enforcement Fairness Act of 1996, generally provides that before a rule may take effect, the agency promulgating the rule must submit a rule report, which includes a copy of the rule, to each House of the Congress and to the Comptroller General of the United States. The EPA will submit a report containing this rule and other required information to the U.S. Senate, the U.S. House of Representatives, and the Comptroller General of the United States prior to publication of the rule in the **Federal Register**. A major rule cannot take effect until 60 days after it is published in the **Federal Register**. This action is not a "major rule" as defined by 5 U.S.C. 804(2). This direct final rule will be effective on August 9, 1999.

List of Subjects in 40 CFR Part 63

Environmental protection, Air pollution control, Hazardous substances, Reporting and recordkeeping requirements.

Dated: May 28, 1999.

Carol M. Browner,

Administrator.

For the reasons set out in the preamble, part 63 of Chapter I of title 40 of the Code of Federal Regulations is amended as follows:

PART 63—NATIONAL EMISSION STANDARDS FOR HAZARDOUS AIR POLLUTANTS FOR SOURCE CATEGORIES

1. The authority citation for part 63 continues to read as follows:

Authority: 42 U.S.C. 7401 et. seq.

Subpart JJJ—National Emission Standards for Hazardous Air Pollutant Emissions: Group IV Polymers and Resins

2. Section 63.1311 is amended by revising paragraphs (b) and (d)(6) to read as follows:

§ 63.1311 Compliance schedule and relationship to existing applicable rules.

* * * * *

(b) New affected sources that commence construction or reconstruction after March 29, 1995 shall be in compliance with this subpart upon initial start-up or September 12, 1996, whichever is later, as provided in § 63.6(b), except that new affected sources whose primary product, as determined using the procedures specified in § 63.1310(f), is PET shall be in compliance with § 63.1331 upon initial start-up or February 27, 2001, whichever is later.

* * * * *

(d) * * *

(6) Notwithstanding paragraphs (d)(1) through (d)(4) of this section, existing affected sources whose primary product, as determined using the procedures specified in § 63.1310(f), is PET shall be in compliance with § 63.1331 no later than February 27, 2001.

* * * * *

[FR Doc. 99-14349 Filed 6-7-99; 8:45 am]

BILLING CODE 6560-50-U

ENVIRONMENTAL PROTECTION AGENCY

40 CFR Parts 9 and 63

[IL-64-2-5807; FRL-6329-5]

RIN 2060-AE40 and 2060-AE44

National Emission Standards for Hazardous Air Pollutants Phosphoric Acid Manufacturing and Phosphate Fertilizers Production

AGENCY: Environmental Protection Agency (Agency).

ACTION: Final rule.

SUMMARY: This action promulgates national emission standards for hazardous air pollutants (NESHAP) for new and existing major sources in phosphoric acid manufacturing and phosphate fertilizers production plants (SIC 2874). Hazardous air pollutants (HAPs) emitted by the facilities covered by this rule include hydrogen fluoride (HF); arsenic, beryllium, cadmium, chromium, manganese, mercury, and nickel (HAP metals); and methyl isobutyl ketone (MIBK). Human exposure to the HAP constituents in these emissions may be associated with adverse carcinogenic, respiratory, nervous system, dermal, developmental, and/or reproductive health effects. Implementation of the rules will achieve an emission reduction of HF estimated at 315 megagrams per year (Mg/yr) (345 tons per year [tpy]). The standards will reduce 940 Mg/yr (1035 tpy) of total fluorides and particulate matter containing heavy metals which are regulated pollutants under the Clean Air Act as amended (the Act). This action also amends 40 CFR part 9 by updating the table of currently approved information collection control numbers to include the information requirements contained in this final rule.

The standards are promulgated under the authority of section 112 of the Clean Air Act (the Act) and are based on the Administrator's determination that phosphoric acid manufacturing and phosphate fertilizers production plants may reasonably be anticipated to emit several of the 188 HAPs listed in section 112(b) of the Act from the various process operations found within the industry. The NESHAP will provide protection to the public by requiring all phosphoric acid manufacturing and phosphate fertilizers plants that are major sources to meet emission standards reflecting the application of the maximum achievable control technology (MACT).

DATES: *Effective Date.* June 10, 1999. See the Supplementary Information section concerning judicial review.

Incorporation by Reference. The incorporation by reference of certain publications in these standards is approved by the Director of the Office of the Federal Register as of June 10, 1999.

ADDRESSES: *Docket.* Public Docket No. A-94-02, containing information considered by the EPA in development of the promulgated standards, is available for public inspection between 8 a.m. and 5:30 p.m., Monday through Friday at the following address in room M-1500, Waterside Mall (ground floor): U. S. Environmental Protection Agency, Air and Radiation Docket and Information Center (MC-6102), 401 M Street SW., Washington, DC 20460; telephone: (202) 260-7549. A reasonable fee may be charged for copying docket materials. For additional information on the Docket and electronic availability see **SUPPLEMENTARY INFORMATION.**

FOR FURTHER INFORMATION CONTACT: For information concerning applicability and rule determinations contact:

Region I

Office of Ecosystem Protection, U.S. EPA, Region I, CAP, JFK Federal Building, Boston, MA 02203, (617) 565-3351

Region II

Kenneth Eng, Air Compliance Branch Chief, U.S. EPA, Region II, 290 Broadway, New York, NY 10007-1866, (212) 637-4000

Region III

Bernard Turlinski, Air Enforcement Branch Chief, U.S. EPA, Region III, 3AT10, 841 Chestnut Building, Philadelphia, PA 19107, (215) 597-3989

Region IV

Lee Page, Air Enforcement Branch, U.S. EPA, Region IV, Atlanta Federal Center 61 Forsyth Street, Atlanta, GA 30303-3104, (404) 562-9131

Region V

George T. Czerniak, Jr., Air Enforcement Branch Chief, U.S. EPA, Region V, 5AE-26, 77 West Jackson Street, Chicago, IL 60604, (312) 353-2088

Region VI

John R. Hepola, Air Enforcement Branch Chief, U.S. EPA, Region VI, 1445 Ross Avenue, Suite 1200, Dallas, TX 75202-2733, (214) 665-7220

Region VII

Donald Toensing, Chief, Air Permitting and Compliance Branch, U.S. EPA, Region VII, 726 Minnesota Avenue, Kansas City, KS 66101, (913) 551-7446

Region VIII

Douglas M. Skie, Air and Technical Operations Branch Chief, U.S. EPA, Region VIII, 999 18th Street, Suite 500, Denver, CO 80202-2466, (303) 312-6432

Region IX

Barbara Gross, Air Compliance Branch Chief, U.S. EPA, Region IX, 75 Hawthorne Street, San Francisco, CA 94105, (415) 744-1138

Region X

Anita Frankel, Office of Air Quality, U.S. EPA, Region X, OAQ-107, 1200 Sixth Avenue, Seattle, WA 98101, (206) 533-2963

For information concerning the analyses performed in developing this rule, contact Mr. Ken Durkee, telephone number (919) 541-5425, Minerals and Inorganic Chemicals Group, Emission Standards Division (MD-13), U.S. Environmental Protection Agency, Research Triangle Park, North Carolina 27711.

SUPPLEMENTARY INFORMATION:

Regulated Entities

Today's rulemaking applies to process components at new and existing phosphoric acid manufacturing and phosphate fertilizers production plants. Examples of those process components are listed in the following table:

Source category	Examples
Phosphoric Acid Manufacturing	Wet Process Phosphoric Acid Process Line, Superphosphoric Acid Process Line, Phosphate Rock Dryer, Phosphate Rock Calciner, Purified Phosphoric Acid Process Line.
Phosphate Fertilizers Production	Diammonium and/or Monoammonium Phosphate Process Line, Granular Triple Superphosphate Process Line, Granular Triple Superphosphate Storage Building.

This table is not intended to be exhaustive, but rather provides a guide for readers regarding entities likely to be regulated by the regulations. This table lists the types of entities that the Agency is now aware could be potentially regulated. To determine whether your facility is covered by the regulations, you should carefully examine the applicability criteria in the rules. If you have questions regarding the applicability of this action to a particular entity, consult the person listed in the preceding **FOR FURTHER INFORMATION CONTACT** section.

Docket and Electronic Information

The principal purposes of the docket are: (1) To allow interested parties to readily identify and locate documents so that they can intelligently and effectively participate in the rulemaking process, and (2) to serve as the record in case of judicial review. The docket index, technical support information, the economic profile of the industry (item II-A-27) and other materials related to this rulemaking are available for review in the docket center or copies may be mailed on request from the Air and Radiation Docket and Information Center by calling (202) 260-7548 or 7549. The FAX number for the Center is (202) 260-4000. The e-mail address for the Center is "a-and-r-docket@epamail.epa.gov". A reasonable fee may be charged for copying docket materials. In addition to being available in the docket, an electronic copy of today's document which includes the regulatory text is available through the Technology Transfer Network (TTN) at the Unified Air Toxics Website (UATW). Following promulgation, a copy of the rule will be posted at the TTN's policy and guidance page for newly proposed or promulgated rules (http://www.epa.gov/ttn/oarpg/t3pfpr.html). More comprehensive information concerning the rule will be posted on the UATW (http://www.epa.gov/ttn/uatw/7_10yrstds.html). The TTN provides information and technology exchange in various areas of air pollution control. If more information on the TTN is needed, call the TTN HELP line at (919) 541-5384.

Judicial Review

The NESHAP for new and existing major sources in phosphoric acid manufacturing and phosphate fertilizers production plants were proposed in the **Federal Register** (FR) on December 27, 1996 (61 FR 68430). This **Federal Register** action announces the EPA's final decision on the rule. Under section 307(b)(1) of the Act, judicial review of the final rule is available only by filing a petition for review in the U.S. Court of Appeals for the District of Columbia Circuit within 60 days of today's publication of this final rule. Under section 307(b)(2) of the Act, the requirements that are the subject of today's action may not be challenged later in civil or criminal proceedings brought by the EPA to enforce these requirements.

The following outline is provided to aid in reading the preamble to the final rule.

I. Background
- A. Background and Purpose of Standards
- B. Technical Basis of Regulation
- C. Stakeholder and Public Participation

II. Summary of Promulgated Standards

III. Summary of Impacts

IV. Summary of Comments on Proposal and Responses
- A. Selection of Pollutants
- 1. Hydrogen Fluoride
- 2. HAP Metals
- 3. Total Reduced Sulfur (TRS)
- B. Compliance Provisions
- 1. Use of Monitored Operating Parameters for Establishing Violations of the Standards
- 2. Selection of Monitored Parameters
- 3. Frequency of Testing
- 4. Simultaneous Testing
- 5. Process Monitoring Requirements for Purified Phosphoric Acid Plant (PPA) Plants
- 6. Other
- C. Emission Limits
- 1. General
- 2. Wet Process Phosphoric Acid (WPPA) Plants
- 3. Evaporative Cooling Towers at Phosphoric Acid Manufacturing Plants
- 4. Phosphate Rock Calciners and Dryers
- 5. Purified Phosphoric Acid (PPA) Plants
- 6. Granular Triple Superphosphate (GTSP) Storage Buildings
- 7. Cooling Ponds
- D. Other Comments
- 1. Determination of Major Source Status
- 2. NSPS Exemption
- 3. Draft Technical Support Document (TSD)
- 4. Applicability—Diammonium and/or Monoammonium Phosphate (DAP/MAP) Emission Limits
- 5. Applicability—Research and Development Facilities
- 6. Notification

V. Administrative Requirements
- A. Docket
- B. Executive Order 12866
- C. Enhancing the Intergovernmental Partnership Under Executive Order 12875
- D. Unfunded Mandates Reform Act
- E. Regulatory Flexibility
- F. Submission to Congress and the Comptroller General
- G. Paperwork Reduction Act
- H. National Technology Transfer and Advancement Act
- I. Executive Order 13045
- J. Executive Order 13084

I. Background

A. Background and Purpose of Standards

Section 112 of the Act requires the Agency to promulgate regulations for the control of HAP emissions from both new and existing major sources. The statute requires the regulations to reflect the maximum degree of reduction in emissions of HAPs that is achievable taking into consideration the cost of achieving the emission reduction, any nonair quality health and environmental effects, and energy requirements. This level of control is commonly referred to as the maximum achievable control technology (MACT).

Section 112 of the Act requires the Agency to establish national standards to reduce HAP emissions from major sources and certain area sources that emit one or more HAPs. Section 112(b) contains a list of HAPs to be regulated by NESHAP. Section 112(c) directs the Agency to use this pollutant list to develop and publish a list of source categories for which NESHAP will be developed and section 112(e) requires the Agency to devise a schedule for development of those NESHAP. The Agency must list all known source categories and subcategories of "major sources" that emit one or more of the listed HAPs. A major source is defined in section 112(a) as any stationary source or group of stationary sources located within a contiguous area and under common control that emits or has the potential to emit in the aggregate, considering controls, 10 tons per year or more of any one HAP or 25 tons per year or more of any combination of HAPs. This list of source categories was published in the **Federal Register** on July 16, 1992 (57 FR 31576) and includes phosphoric acid manufacturing and phosphate fertilizers production.

The control of HAPs is achieved through the promulgation of technology-based emission standards under section 112(d) and work practice standards under 112(h) for categories of sources that emit HAPs. Emission reductions may be accomplished through the application of measures, processes, methods, systems, or techniques including, but not limited to: (1) Reducing the volume of, or eliminating emissions of, such pollutants through process changes, substitution of materials, or other modifications; (2) enclosing systems or processes to eliminate emissions; (3) collecting, capturing, or treating such pollutants when released from a process, stack, storage or fugitive emissions point; (4) design, equipment, work practice, or operational standards (including

requirements for operator training or certification) as provided in subsection (h); or (5) a combination of the above. (See section 112(d)(2).) The Agency may promulgate more stringent standards at a later date if residual risk remains after the imposition of controls. (See section 112(f)(2)). Pursuant to section 112(d) of the Act, on December 27, 1996 the Agency proposed NESHAP for new and existing sources in the phosphoric acid manufacturing and phosphate fertilizers production source categories (61 FR 68430).

B. Technical Basis of Regulation

For existing sources, section 112(d) of the Act requires that the Agency establish NESHAP which require the maximum degree of reductions achievable by available control techniques. Such standards (called "maximum achievable control technology" or "MACT") may be no less stringent than "the average emission limitation achieved by the best performing 12 percent of the existing sources (for which the Administrator has information)." In general, NESHAP are to be numerical limitations derived from the application of emissions control technologies. This level of control is commonly referred to as the MACT floor. As a starting point, the Agency gathered available data to analyze to identify the technology that could achieve the lowest emissions. Since the HAP HF was the main concern for this standard, the initial approach was focused upon determining MACT for HF. The same approach was later extended to HAP metals for subsequent analyses.

During its information collection effort regarding HF emissions, the Agency found that there is a large body of existing data for the surrogate pollutant total fluoride, which the Agency previously designated for control under § 111 of the Act through the development of new source performance standards (NSPS) and emissions guidelines (EG). The NSPS are emissions limitations for new sources based upon the best demonstrated technologies considering cost, non-air quality health and environmental impacts, and energy impacts. Given a limited amount of direct data on HF emissions and a large body of data developed to demonstrate achievement of permitted emissions which include HF as a component of total fluorides, the Agency chose to use total fluoride as a surrogate for HF in its analyses. By adopting the approach of regulating total fluoride as surrogate for HF, the Agency availed itself of information reflecting the effect of over twenty years of implementation of NSPS and EG which are technology-based standards. The Agency obtained performance data derived from emissions tests conducted to establish compliance with emissions limitations required by NSPS and with State-permitted emissions limitations developed pursuant to EG for previously existing sources.

Performance data were analyzed for several different types and configurations of wet scrubbing devices and the data indicated that no one design achieves superior control. Further, the data were reviewed for the purpose of calculating MACT floors. Data for sources with multiple emission tests showed significant variability which tended to have as its upper bound the permitted emission limits. This was to be expected since the controls were designed and operated to achieve specific limits as reflected in permits. The permit limits were typically based upon NSPS and EG. Since the data indicated that the level of control capable of being achieved was reflected in sources' permits, the Agency elected to directly calculate floors on the basis of the permitted emission limits. So, to determine emissions limits corresponding to MACT floors, the Agency first identified the median of the top twelve percent of permits issued to sources for each process. After thus identifying the best controlled sources and establishing preliminary MACT floors, the Agency again analyzed the available test data to ascertain that the control levels of the permit limits were being achieved and to determine if greater degrees of control were actually being achieved in practice for individual processes. For sources of total fluorides, test data showed that the permitted emissions were reflective of the degree of emissions control actually being achieved.

For phosphate rock dryers and calciners, the MACT floors were established using particulate matter as a surrogate for HAP metals. For dryers, the MACT floor analysis was performed using permitted emissions of particulate matter. The available test data indicate permitted levels are being achieved. For calciners, the permits were all based upon general process rate allowances which were not developed specifically for phosphate rock calcining. In the case of calciners, there were numerous test reports for particulate matter. Test data showed that the permits do not reflect the level of emissions reductions achieved in practice. So, for calciners, the MACT analysis was based upon the test data, which consistently were lower than permitted levels.

One source manufactures a purified phosphoric acid (PPA) through a solvent extraction method. The plant emits MIBK, which is a HAP. Fugitive emissions of MIBK from valves, flanges, and seals are reduced by means of an ongoing maintenance and repair program. As the lone PPA facility in the source category, its control methods constitute the MACT floor for controlling fugitive emissions of MIBK. The MIBK cannot be emitted through a conveyance designed and constructed to capture this pollutant. Upon consideration of the fugitive nature of these emissions, the available information and the public comments received, the Agency has concluded that it is not feasible to prescribe or enforce an emission standard for control of these emissions. In section 112(h)(1), the Act provides that the Administrator may prescribe a work practice consistent with the provisions of section 112(d) in lieu of an emission standard, if it is not feasible to prescribe or enforce an emission standard for control of a HAP. In this instance, the current work practices at the plant constitute the floor level of control for PPA plants. The LDAR (leak detection and repair) provisions in 40 CFR part 63, subpart H were determined during development of the hazardous organics NESHAP to be MACT for fugitive emissions sources with similar characteristics to those of the one plant emitting MIBK. After considering all available information, especially the public comments received, the Agency has concluded that subpart H is at least equivalent to the facility's current practices and has adopted the LDAR provisions of the Hazardous Organics NESHAP (HON) as part of the MACT controls for this process.

Having thus identified the floor level of control for the different processes and pollutants of concern, the Agency then considered the possibility of setting more stringent limitations. The final rule, like the proposal, does not require facilities to achieve emission reductions more stringent than the MACT floor.

As a part of a reconsideration, the Agency first explored the possibility that different control technologies were available and demonstrated for the classes of sources being controlled by today's action. None were found that had been demonstrated and could be applied without creating additional negative impacts to other environmental media. The Agency also considered whether new source emission limits could be applied to existing sources. The emissions data showed that high levels of control were being achieved in both cases and that there was minimal

opportunity for additional significant reductions to be achieved by going from the existing-source MACT floors to the levels of new source MACT. Balanced against the minimal potential for additional reductions were the costs of retrofitting controls to plants for which emissions data showed the existence of multiple test data points near the MACT floor. As an example, the Agency previously calculated the annualized capital cost for the addition of a new wet scrubber to a model WPPA (wet process phosphoric acid) plant producing 36 tons per hour to be $17,253 per year. Such a plant operating at the existing source MACT level which would install a new scrubber to achieve the new source MACT level would reduce HF emissions by 0.34 tons per year. So, the cost effectiveness of the additional reduction would be $50,744 per ton of additional HF removed, which the Agency considers to be inappropriately high at this time. Thus, the Agency concludes that requiring existing sources to be controlled beyond the MACT floor would be unreasonable in terms of cost.

For new sources, section 112(d) of the Act requires that the Agency establish NESHAP which may be no less stringent than "the emission control that is achieved in practice by the best controlled similar source." For new sources, the most stringent permit issued for any given process was adopted as MACT, except for calciners. Performance test data indicated that the most stringent permit limits were being achieved in practice. The calciners limit was based upon test data that showed an achievable level of performance exceeding the permitted requirements. Thus, MACT was set for all but one of the subcategories at the level of the most stringent permit requirements because there was no case in which more effective controls were identified.

C. Stakeholder and Public Participation

In the development of these standards, numerous representatives of the phosphate fertilizers industry were consulted. Industry representatives have included trade associations and producers. Representatives from other interested Agency offices, regional offices, and State environmental agencies participated in the regulatory development process as members of an informal work group. The work group was involved in the regulatory development process, and was given opportunities to review and comment on the standards before proposal and promulgation. Finally, industry representatives, regulatory authorities, and environmental groups had the opportunity to comment on the proposed standards and to provide additional information during the public comment period that followed proposal.

The standards were proposed in the **Federal Register** on December 27, 1996 (61 FR 68430). The preamble to the proposed standards described the rationale for the proposed standards. Public comments were solicited at the time of proposal. To provide interested persons the opportunity for oral presentation of data, views, or arguments concerning the proposed standards, a public hearing was offered at proposal. However, the public did not request a hearing and, therefore, one was not held. The public comment period was from December 27, 1996 to February 25, 1997. Sixteen comment letters were received. Commenters included industry representatives, control device manufacturers, State agencies and an environmental organization. The comments were carefully considered, and changes were made in the proposed standards when determined by the Agency to be appropriate. A detailed discussion of these comments and responses can be found in Section IV of this preamble.

II. Summary of Promulgated Standards

The NESHAP emissions limits for existing and new sources are given in the tables below.

EMISSIONS LIMITATIONS FOR EXISTING PHOSPHORIC ACID MANUFACTURING PLANTS AND PHOSPHATE FERTILIZERS PLANTS

Class of source	Pollutant	Emission limit
Wet Process Phosphoric Acid Process Line	Total Fluorides	0.020 lb. Total Fluoride (F^-) Per Ton P_2O_5 Feed.
Superphosphoric Acid Process Line	Total Fluorides	0.010 lb. F^- Per Ton P_2O_5 Feed.
Diammonium and/or Monoammonium Phosphate Process Line.	Total Fluorides	0.060 lb. F^- Per Ton P_2O_5 Feed.
Granular Triple Superphosphate Process Line.	Total Fluorides	0.150 lb. F^- Per Ton P_2O_5 Feed.
Granular Triple Superphosphate Storage Buildings.	Total Fluorides	5.0×10^{-4} lb. F^- Per Hour Per Ton of P_2O_5 Stored.
Phosphate Rock Dryers	Particulate Matter	0.2150 lb. PM Per Ton of Rock Feed.
Phosphate Rock Calciners	Particulate Matter	0.060 grains PM Per Dry Standard Cubic Foot.
Purified Phosphoric Acid Process Line	MIBK	Implement Part 63, Subpart H, Leak Detection and Repair Program.

EMISSIONS LIMITATIONS FOR NEW PHOSPHORIC ACID MANUFACTURING PLANTS AND PHOSPHATE FERTILIZER PLANTS

Class of source	Pollutant	Emission limit
Wet Process Phosphoric Acid Process Line	Total Fluorides	0.01350 lb. Total Fluoride (F^-) per ton P_2O_5 Feed.
SuperphosPhoric Acid Process Line	Total Fluorides	0.00870 lb. F^- per ton P_2O_5 Feed.
Diammonium and/or Monoammonium Phosphate Process Line.	Total Fluorides	0.0580 lb. F^- per ton P_2O_5 Feed.
Granular Triple SuperphosPhate Process Line.	Total Fluorides	0.1230 lb. F^- per ton P_2O_5 Feed.
Granular Triple SuperphosPhate Storage Buildings.	Total Fluorides	5.0×10^{-4} lb. F^- Per Hour Per Ton of P_2O_5 Stored.
Phosphate Rock Dryers	Particulate Matter	0.060 lb. PM Per Ton of Rock Feed.
Phosphate Rock Calciners	Particulate Matter	0.040 grains PM Per Dry Standard Cubic Foot.
Purified Phosphoric Acid Process Line	MIBK	Implement Part 63, Subpart H, Leak Detection and Repair Program.

The form, but not the substance, of the standard for one subcategory has changed since proposal. In the proposal, the Agency noted that two types of superphosphoric acid process lines currently operate: a vacuum evaporation process and a submerged combustion process. These processes are quite distinct from one another and they use different feedstock. Moreover, the submerged combustion process is not amenable to the same level of control as is the vacuum evaporation process. The Agency therefore concluded that these processes should be regulated as separate subcategories under this NESHAP.

Because only one facility currently exists in the submerged combustion process subcategory, the proposal's emission standard for the subcategory consisted of the lone source identified by company name. In the final regulation, the Agency has established an emission limit for the submerged combustion process subcategory generally without reference to the specific facility. Doing so ensures that changes in the facility's name or ownership would not change the applicable emission standard.

Consistent with the proposal, the final regulation does not distinguish between process types in its establishment of new source emission limits for superphosphoric acid production. As the Agency noted at proposal, a new facility "could avail itself of the same resources as other companies in the industry" in choosing the kind of process to employ in manufacturing superphosphoric acid. (See 61 FR 68438.) Put another way, the Agency examined both vacuum evaporation process and submerged combustion process sources to identify the "best controlled similar source," which serves as the MACT floor for new sources. The Agency concluded that the MACT floor was represented by a facility employing the vacuum evaporation process. No commenter objected to this proposal and the Agency has retained it in the final regulation.

Two additional technical changes are present in the final regulation. First, the standards as proposed often referred to "plants" in defining the affected source, but the final regulation refers to "process lines." For example, the proposed standard for a "Wet Process Phosphoric Acid Plant" now refers to a "Wet Process Phosphoric Acid Process Line." Because the NSPS used the term "plant," the proposal (based in large part upon the NSPS) did as well. However, in practice, the "plant" to which the NSPS applies is indeed a single process line. EPA has chosen to use the more specific term in the final regulation in order to promote clarity for the regulated public. The Agency is confident that this change has no effect on the stringency of the standard.

Second, the requirement that owners or operators of purified phosphoric acid process lines ensure that each product acid and raffinate stream have no more than a specified concentration of MIBK and that they ensure that the chiller stack exit gas stream remains below a given temperature has been moved from the monitoring section of the rule to its more appropriate location in the emission standard section.

An annual performance test is required to demonstrate compliance with each applicable numerical limit for total fluorides or particulate matter. The monitoring provisions require an owner or operator using a wet scrubbing device to continuously monitor the pressure drop and liquid flow rate of scrubbing devices used to control total fluorides or particulate matter. The feed rate of raw materials to the processes must also be continuously monitored. During the performance test, the owner/operator must record the scrubber pressure drop and liquid flow rate to establish baseline levels. Following the performance test, it is an operating requirement that the owner/operator must maintain scrubber pressure drop and liquid flow rate within plus or minus twenty percent of the values recorded during the performance test or within a range established upon the basis of prior successful tests. Any exceedance of the operating range averaged over 24 hours is a violation of the operating requirement.

For PPA plants that emit MIBK, the standards require implementation of a leak detection and repair program, continuous monitoring of chiller stack temperature and daily monitoring of MIBK concentrations at two points in the process.

As required by the NESHAP General Provisions (40 CFR part 63, subpart A), the owner or operator must develop and implement a startup, shutdown, and malfunction plan. Most notification, recordkeeping, and reporting requirements in the general provisions apply to phosphoric acid manufacturing and phosphate fertilizers production facilities. These include but are not limited to: (1) initial notification(s) of applicability, notification of performance test, and notification of compliance status; (2) a report of performance test results; (3) a Startup, Shutdown, and Malfunction Plan with semiannual reports of reportable events (if they occur); and (4) semiannual reports of excess emissions. If excess emissions are reported, the owner or operator must report quarterly until a request to return the reporting frequency to semiannual is approved.

The NESHAP General Provisions also require that records be maintained for at least 5 years from the date of each record. The owner or operator must retain the records on site for at least 2 years but may retain the records off site the remaining 3 years. The files may be retained on microfilm, microfiche, on a computer, on computer disks, or on magnetic tape. Reports may be made on paper or on a labeled computer disk using commonly available and EPA-compatible computer software.

III. Summary of Impacts

The overall effect of the rule is to raise the control performance of plants in the industry to the level achieved by the best performing plants. In addition to the health and environmental benefits associated with HAP emission reductions, benefits of this action include a decrease in site-specific levels of non-HAP pollutants and lowered occupational exposure levels for employees.

The Agency estimates that up to 550 Mg/yr (605 tpy) of HF, the predominate HAP, and other HAPs are emitted from sources at phosphoric acid manufacturing and phosphate fertilizers production plants at the current level of control. Implementing MACT-level controls is expected to reduce these HAP emissions from regulated sources by about 315 Mg/yr (345 tpy) nationwide. Plants affected by the standards are expected to achieve these reductions by upgrading or installing wet scrubbing systems.

Expected impacts to energy usage and other media are expected to be negligible. The largest possible impact will be a minor increase in liquid streams flowing to cooling ponds. Since the processes are net consumers of water, those flows will be recycled to the processes.

The nationwide capital and annualized costs of the NESHAP, including emission controls and associated monitoring equipment, are estimated at $1.4 million and $862,000/yr, respectively. The economic impacts are predicted to increase product prices less than three-fourths of a percent. One company in the industry is a small entity which would be subject to the standards. The economic impact of the NESHAP on this company is estimated to be low and would not be significant. No production line or plant closures are expected.

IV. Summary of Comments on Proposal and Responses

A. Selection of Pollutants

1. Hydrogen Fluoride

Comment. One commenter said that the Agency had no empirical data measuring whether and to what extent HF is actually emitted from phosphoric acid manufacturing and phosphate fertilizer production facilities, and, that the Agency should not, and legally may not, propose or promulgate a NESHAP for HF emissions from these facilities. The commenter questioned whether or not phosphoric acid manufacturing and phosphate fertilizer production facilities actually emit HF. The commenter said that no direct measurements of HF emissions from such facilities have ever been made. The commenter went on to question the calculations used to support the original listing of the source categories and the validity of the listings. The commenter further questioned the suitability of the Agency's use of a state permitting report (docket item II–I–32cc) since it did not contain results of direct measurements of HF. The commenter read the March 1995 review draft technical support document (TSD) as recognizing, whether or not, and to what extent, HF may be emitted by the sources affected by the draft NESHAP is dependent to a large extent on the levels of silica present in the processes in question. The commenter postulated that ammonia also ties up fluoride as ammonium bifluoride, making it even less likely that phosphoric acid manufacturing and phosphate fertilizer production facilities actually emit HF. Thus, the commenter concluded that it appears that the Agency is basing both its determination that the facilities in question emit HF and its estimation of the amount of HF emitted on two sources: (1) "calculations" made by an EPA contractor; and (2) a report prepared by a company in connection with state toxic air pollutant permitting. The commenter said that these "calculations" are unverified estimates and are not based on empirical data. The commenter continued that the state permitting report was not based on actual measurements of HF emissions. Rather, the silica content of monitoring impingers employed to test total fluoride emissions in two test runs was used to create a mass balance for various fluoride species across all of the fluoride emission points at the facility in question.

One commenter said that the HF fraction of the fluorides in air emissions from phosphate-ore plants, in view of the speciating difficulties of ascertaining the exact fraction as HF, should be closer to the "⅓ rule" of chemistry (the reaction of $H_2SiF_6 \rightarrow 2HF + SiF_4$), not the 28–49 percent range EPA is considering. The commenter said that with silica present in all parts of the phosphoric acid process it is logical for the HF portion in air emissions to be a mere fraction of the 28–49 percent range.

Response. The Agency responds to the statement that HF has not been directly measured or detected at phosphate fertilizer complexes by referring to docket items II–A–6 and II–A–12 which are reports of Agency tests which used Fourier transform infrared spectroscopy (FTIR) sampling and analysis to directly measure HF and silicon tetrafluoride at two facilities. Hydrogen fluoride was measured in amounts that exceeded the major source cutoff under Section 112. It was noteworthy that no silicon tetrafluoride was present in several test runs. In those test runs where silicon tetrafluoride was measured, its concentrations were dwarfed by those of HF. In a third test reported in docket item II–D–15, HF was also measured. The significance of all of these tests is that there are major sources of HAP emissions and HF was in fact directly measured. The low amount of silicon tetrafluoride present is supportive of the Agency's approach of estimating the HF component of total fluoride as one third of the total as predicted by the chemical equations cited in the TSD. The information in the State toxics permitting report (docket item II–I–32cc), which was submitted to the State by a source in the industry, supports this approach.

Comment. One commenter said the Agency used inconsistent methodology in evaluating and regulating HF from processes and the associated cooling ponds. It was the commenter's position that the Agency must use total fluoride as a surrogate for HF in all situations, including cooling pond emissions. Further, the commenter thought that use of one HF test from one cooling pond was highly questionable given the historic wide variation in fluoride emission data from gypsum/cooling ponds. The commenter cited an Agency publication that gave fluoride emission data for gypsum/cooling ponds that has ranged from 0.2 to 10 lbs. of fluoride a day per acre of surface area. The commenter concluded that gypsum/cooling ponds remain a major source of fluoride emissions and the Agency had not established a sound scientific basis for concluding that HF was not a significant part of the large fluoride emissions from the cooling ponds.

Response. The Agency's analysis of NESHAP for cooling ponds focused upon HF emissions because direct measurement data were available. The Agency is aware that those results differed from those of prior studies, including the Agency's own FTIR studies. The variations in data result in different possible estimates of total emissions. Nevertheless, these differences are not important for the purposes of the present rulemaking. The MACT floor determination is driven by the availability of existing control techniques. Here, MACT for existing cooling ponds is no control because there are no demonstrated control techniques used in practice which could have been applied to these sources, regardless of estimated emissions.

Total fluorides were used as a surrogate for HF to establish MACT for emissions from process sources, in contrast to the ponds, because no direct measurements of HF were available and because the NSPS are based on total fluorides. The Agency notes that the results of the FTIR analyses for cooling ponds gave proportions of HF relative to total fluoride which were consistent with those predicted by chemical stoichiometry and, therefore, are supportive of the Agency's approach to estimating the impacts of the emission standards for processes. Since the control of total fluorides and HF from process sources is accomplished with the same control technology (scrubbers), the MACT analysis results in the same level of control regardless of how the emissions are characterized. The use of total fluoride as a surrogate for HF simply changes the manner in which the emissions limit is quantified, not the actual level of control.

2. HAP Metals

Comment. Three commenters stated that particulate matter is an adequate performance measurement for the most likely control technology (wet scrubbers). However, they were concerned that particulate matter used as a surrogate may not accurately track all HAP metals emissions. Their primary concern arose from the fact that calciners operate at temperatures near 1,500 degrees F, which volatilize some HAP metals (such as arsenic, cadmium, mercury and selenium). They noted that such volatilized metals would likely condense as sub-micron particles (for which the scrubbers have significantly lower control efficiency than they do for the bulk of the calciner particulate matter) and that Method 5 measurements would not reflect those emissions. This could lead to an erroneous conclusion that those

pollutants were adequately reduced. In consideration of these concerns, the commenters suggested that the final rule should require affected sources to collect appropriate data (such as that established by Method 29) with which to determine the extent of HAP emissions from calciners.

Response. As the commenters noted, the MACT floor technology consists of wet scrubbers. EPA used available particulate matter emissions data to serve as a surrogate for HAP metals. This PM Surrogate will require the installation of equipment at least as efficient as the technology that is representative of the floor level of emissions. Emission tests and analysis for metals is more costly than simply testing for particulate and would not result in a different floor technology. Therefore the Agency is requiring that particulate testing be performed to demonstrate compliance.

Comment. One commenter said that no direct information was presented to confirm the existence of HAP from dryers and calciners at phosphoric acid manufacturing facilities. The commenter asked that all sections of the proposal dealing with these sources be deleted in the absence of some evidence that they are major HAP emitters.

Another commenter said that the data cited by the Agency are not a sufficient basis for the establishment of a NESHAP for such metals. The commenter stated that there are no stack test data specific to HAP metals and the only data on HAP metals cited are those included in a state toxic air pollutant permitting report (docket item II–I–32cc). The commenter said the establishment of NESHAP (or for particulate matter as a surrogate for such metals) is beyond the legal authority of the Agency under the Act.

Response. Since HAP metals are present in phosphate rock, they will also be emitted from equipment subjecting the ore to high temperatures. The information in the TSD and the docket, to which commenters allude, is air toxics information provided to the State of North Carolina (docket items II–I–32aa and cc) that certifies that a particular source in that State emits HAP metals from dryers and calciners. The State has endorsed the submittals of that source in the form of approved air toxics permits. In particular, item II–I–32aa, which is an attachment to item II–I–32cc, contains results of direct testing of particulate matter from calciner emissions. The testing found arsenic, manganese, nickel, and cadmium, all of which are HAPs. Thus, the Agency concluded that PM is an effective surrogate for HAP metals.

Also, the docket includes item II–I–52u that refers to information provided to a State regulatory agency that indicates that HAP compounds are emitted from calciners that a commenter operated and for which the commenter has current operating permits. Commenter's point that some dryers and calciners may not be major HAP emitters by themselves would not excuse the Agency from a duty to establish emissions limits for that equipment when it is located at major sources of HAPs.

3. Total Reduced Sulfur (TRS)

Comment. One commenter expressed concern that the NESHAP would not address TRS emissions from WPPA plants. The commenter gave as an example one facility that emits 1690 tons per year of TRS and noted that those emissions dwarfed those of kraft pulp mills in its jurisdiction. The commenter suggested that TRS should be regulated and the most appropriate way to do so would be through the next review of the NSPS in subpart T.

Response. Because the TRS pollutants are not listed as HAPs for the purposes of the Act, the Agency presently is not required to regulate TRS under section 112 of the Act. The commenter's suggestion of considering limits on TRS during the next review of the NSPS in Subpart T will be addressed in that context.

B. Compliance Provisions

1. Use of Monitored Operating Parameters for Establishing Violations of the Standards

Comment. A number of commenters expressed their opinions on the Agency's proposal to relate operation outside established site-specific ranges of wet scrubber pressure drop and liquid flow rate to exceedances of the emissions limits. The commenters were unanimous in questioning such relationships for emissions levels for total fluorides and particulates for the sources subject to these NESHAP. One commenter claimed that there was no basis for limiting the variation in operating parameter monitoring results to plus or minus ten percent of the level observed during a performance test. The commenter said there were no data in the record to support any correlation between operating parameter exceedances and a violation of the proposed NESHAP emission limits, much less a correlation between a greater than ten percent variation in operating parameter values and such a violation. Another commenter said the proposed ±10 percent restriction limit on the emission control devices (usually scrubber pressure drop and the liquid flow rate) was needlessly restrictive. The commenter recommended a ±17 percent restriction limit as being less restrictive and serving as a "surrogate" indicator for continuous monitoring of equipment whose function is to maintain emission limits.

The primary industry commenter argued that there is nothing in the record of this rulemaking to establish that an operating parameter exceedance is "credible evidence" of the duration, much less the existence, of a violation of the proposed NESHAP emission limits. The commenter noted that the data contained in the record of this rulemaking consist entirely of performance test results and there are absolutely no data or information in the record upon which the Agency could base a determination that the operating parameter exceedances identified in the proposal can be equated with a violation of the proposed NESHAP emission limits. The commenter provided data for the purpose of indicating that sources might meet proposed emissions limits over a wide range of operating conditions. The data covered a period of years and included a wide range of operating conditions. As a group, these commenters were of the opinion that control device operating parameters such as scrubber pressure drop and liquid flow rate could be used as indicators of proper operation and the need for maintenance.

In the event that the monitoring provisions of the proposal were retained, three commenters recommended that sources electing to use historic test results to establish a range of operation for control device operating parameters as provided by proposed §§ 63.604(d)(2) or 63.624(f)(2) should be given the same opportunity to retest to demonstrate that prior exceedances did not constitute violations of emission limits as provided in §§ 63.604(d)(1) or 63.624(f)(1). Pursuing the logic of the previous paragraph, one of the commenters said the basis for the retest option would be the fact that compliance with the emission limits can be achieved even if operating parameter values are outside the range observed during a compliance performance test. The commenter held that this rationale was valid whether the operating parameter ranges are established by the plus or minus ten percent method or by the owner or operator under the alternative method.

Some commenters believe it is prudent to keep the continuous parameter monitoring requirements in

the proposed rule to assist operators in determining whether their controls are operating properly. They note that while it is not necessarily true that sources are in compliance with the emission standards just because their two monitored operating parameters are within the range of values established during the performance test, exceedances of operating parameters are good indicators of control device malfunctions. These commenters recommended not allowing sources that exceed the continuous monitoring parameters set during the performance test to have the opportunity to retest within 30 days to demonstrate that the prior exceedance did not constitute a violation of an emission limit, as proposed. The commenters believe it would be very difficult to ensure that the proposed provisions requiring the source to establish and maintain during the re-test the same operating conditions that existed during the exceedance of the operating range could be properly followed and that the retest would, in all probability, not represent conditions present during the exceedance. Furthermore, they commented that the allowance to retest would add another layer of complications for determining compliance under the rule. They recommended deleting the allowance to retest from the final rule.

Response. The final rule accommodates the concerns raised with regard to the Agency's proposal linking exceedances of operating parameter ranges to compliance with the emission limit. Specifically, the final rule eliminates this direct linkage, based on data submitted by commenters' indicating that compliance with an operating parameter range does not always correlate to compliance with the emission limit, and it establishes instead operating parameter limits which help assure continuous compliance with the emission limit. In so doing, the rule also reflects other concerns that the standard should contain operating requirements aimed at ensuring proper operation and maintenance of sources' control devices. Consequently, although the data available to the Agency did not establish an exact correlation between operating parameter values and specific exhaust gas concentrations, the rule retains the requirement to maintain operating parameter values within established ranges, in order to help assure that MACT is being complied with on a continuous basis.

Monitoring of an operating parameter, with an enforceable operating limit, will help assure continuous compliance with the emission limit through continuous emission reductions. The operating limit is a separately enforceable requirement of the rule and is not secondary to the emission limit.

This standard requires sources using wet scrubbers to continuously monitor the scrubber liquid flow rate and the pressure drop across the scrubbers and to maintain these operating parameters within ranges under which the source demonstrates, via a performance test, the source can comply with the emission limit. The operating limits established during a performance test help assure continuous compliance with the emission limit. The EPA has considered the commenters' argument that an exceedance of an operating parameter is not necessarily an exceedance of an emission limit and has consequently not made operating limit exceedances automatic violations of the emission limit; however, the Agency has made these operating limits separately enforceable requirements of the rule in order to promote continuous compliance with the emission limit.

By doing so, the final rule accounts for the commenters' claims in two ways: (1) the operating limits include an operating margin of ±20 percent for sources that base the operating limit upon the baseline values of operating parameters established in the most recent performance test; and (2) by allowing sources to establish operating limit ranges based upon baseline values of operating parameters established in either historic performance tests or performance tests conducted specifically to establish such ranges. Thus, sources have two options to establish operating limit ranges within which the source will still be in compliance with the operating limit. By including an operating margin, the EPA recognizes that control devices can be operated and maintained under a range of conditions and still help assure compliance with the emission limit through continuous emission reduction. For the final rule, the Agency has increased the operating margins in the first instance described above from ±10 percent at proposal to ±20 percent. This change was made in response to the Agency's review of data submitted by the industry commenters that showed a wide range of variability in the level of operating parameters over which the emissions limits could be achieved. The Agency believes that sources which operate in these expanded margins and sources which keep operating parameters within a range established on the basis of test data generally will be meeting the emission limit and, thus, these changes make the operating requirements more likely to provide a reasonable assurance of the source's compliance status. As an additional safeguard to ensure that these operating requirements are set to help assure continuous compliance with the emission limit, when performance testing shows emissions near the emission limits, the permitting agencies have the discretion to shrink a previously-established operating range when a source operating within the broader range could be expected to exceed the emission limits. On the other hand, the Agency does not believe that it is necessary to further expand these operating margins, as some commenters suggest, because the rule permits sources to undertake additional performance testing to establish operating limits which reflect compliance with the emission limit for the full range of operating conditions at the source.

Finally, because the final rule does not make operating limit exceedances automatic violations of the emission limit, and because the operating limits are separately enforceable requirements of the rule, a provision which allows the source to retest to show that certain operating parameter levels do not equate with an emission limit violation is unnecessary. Accordingly, the Agency has deleted the retest provision, as suggested by the State commenters.

Comment. Two commenters said, in many cases, the pressure drops involved are less than one inch and the commenter is unaware of monitoring equipment that can measure at the tenth of an inch level necessary to determine whether or not the measured pressure drop is plus or minus ten percent of that observed during a performance test.

Response. As a result of the comments concerning possible unavailability of instrumentation with suitable sensitivity, the Agency contacted an instrument vendor and was advised that the necessary equipment is available.

Comment. One commenter speaking for the industry as a whole said that operating parameter exceedances may not be denominated as violations of NESHAP emission limits. The commenter said the Act provides no legal authority to denominate operating parameter exceedances as violations of emission limits. The commenter said this is particularly the case when, as here, the emission limits have been developed using a database which consists entirely of performance test results. In such a case, the denomination of operating parameter exceedances as a violation of the emission limit would have the effect of changing the emission limit without

sufficient technical support in the record.

The commenter anticipated that the Agency could argue that section 113(e) of the Act provides the necessary legal authority and noted that the section provides that the duration of a violation may be established by "any credible evidence (including evidence other than the applicable test method)." However, the commenter posited that any argument that section 113(e) provides legal authority to denominate operating parameter exceedances as a violation of emission limits in general, and the proposed NESHAP in particular, would be without merit. The commenter argued section 113(e) permits any credible evidence other than the applicable test method to be used only to establish the duration of a violation, not the fact that a violation has occurred.

Response. The final rule does not make exceedances of operating requirements per se violations of the emission limitation. As such, the commenter's concern presumably has been addressed by changes since proposal. The Agency, however, specifically disagrees with the commenter's suggestion that, under the Act, parameter deviations cannot be denominated as violations of applicable emission standards. Section 113(a) of the Act directly contradicts the commenter's position. It permits enforcement actions for violations of the statutory requirements "on the basis of any information available to the Administrator* * * *" This broad language means that the Agency can prove a violation based on any information available, limited only by general evidentiary rules.

In addition, the commenter's reading of section 113(e) is too constrained. As the Agency stated in the Credible Evidence rulemaking, section 113(e)'s focus on the duration of a violation grew out of Congress's desire to reverse a judicial decision prohibiting the Agency from establishing a violation's duration by non-reference test methods. See 62 FR 8314, 8320–22 (February 24, 1997). Section 113(e) should not, therefore, be read to limit the Agency's ability to prove the fact of an emission violation, in addition to the duration of such violation, by any credible evidence.

2. Selection of Monitored Parameters

Comment. One commenter said operating parameter ranges should be established on the basis of any relevant data as opposed to the proposal that would allow alternatives to the plus or minus ten percent operating range to be established using data obtained during full-scale performance testing. The commenter thought that data other than that obtained during full-scale performance testing could validly establish operating ranges for pressure drop and liquid flow rate that are representative of compliance with the NESHAP emission limits. The commenter believed that because other data may be used to establish the required operating ranges, and because the ranges must be approved by appropriate government officials, the proposed §§ 63.604(d)(2) and 63.624(d)(2) should be revised to permit the establishment of the required operating ranges on the basis of any relevant data or information, including engineering assessments and manufacturer's recommendations.

Another commenter said that changes in pressure drop are not always an accurate indication of changes in performance for certain types of scrubbers. In particular, the commenter said phosphoric acid production and DAP/MAP fertilizer production are each highly scaling (e.g. depositing hard incrustations inside process vessels) services, and pressure taps necessary for continuous pressure drop monitoring readily scale over in both services. The commenter said that while it is certainly possible to operate a continuous pressure drop monitoring system in these services, keeping the pressure taps from scaling over can be a maintenance-intensive effort. So, the commenter suggested that the final version of the proposed rule should allow for continuous monitoring and recording of some other appropriate indicator parameter(s) in lieu of pressure drop in cases where other parameters provide a more accurate indication of scrubber performance.

Response. Since the scrubber pressure drop and liquid flow rate are direct indicators of the operation of the control device and its performance during the most recent testing, the final standards continue to require that those parameters be monitored. The commenters' suggestions that other "relevant" or "appropriate" indicators should be specified in lieu of pressure drop and liquid flow rate are vague and would result in case-by-case debates as to whether any of innumerable options may or may not accomplish the same degree of feedback on the performance of emissions controls. The commenters provided no data as to how other parameters correlate with emissions limits. Likewise, establishment of the required operating ranges on the basis of any relevant data or information, including engineering assessments and manufacturer's recommendations, as suggested by the commenters, would be insufficient because there would be no link established between such ranges and the emission limits as is the case when ranges are set during performance testing. The general provisions provide the opportunity for sources to obtain consideration of alternative monitoring, as needed.

3. Frequency of Testing

Comment. Two commenters said that the proposed one-time performance testing was inadequate. The commenters cited the example of one source that is required to test WPPA plants, phosphate rock dryers and calciners, DAP/MAP plants and GTSP plants on an annual basis. The commenters recommended that the Agency require testing either annually or once every permit cycle. The commenters consider one-time performance testing insufficient and a step backwards from their current requirements.

The commenters considered the proposed one-time performance test requirement for sources ineffective and inadequate to demonstrate compliance with each applicable numerical emission limit for total fluorides and particulate matter (surrogate pollutants). They stated that most sources at the affected facilities currently perform at least annual stack testing for the surrogate pollutants identified above. They commented that air pollution control agencies have required this level of testing because their experience indicates that these sources are prone to problems with control device maintenance. They note that many affected facilities, which represent large industrial complexes that have undertaken this type of stack testing for numerous years, use their own environmental compliance staff to conduct the tests, minimizing any economic burden. Accordingly, the commenters recommended that the minimum requirement for ensuring compliance with the proposed emission standards should be annual stack testing using the methods described in the performance tests and compliance provisions sections (§§ 63.606 and 63.626).

Response. The Agency has taken note of the comments that the equipment and control devices in these source categories are subject to harsh conditions that cause corrosion and scaling of the process components and that State agencies already require annual tests of these facilities. So, the performance of the emissions controls will vary over time and so may emissions. Thus, the Agency is promulgating a requirement for annual

testing in the final rule. This change is also important in light of the decision not to make operating parameter exceedances violations of the emission standards, which raises concerns as to how to ensure appropriate enforcement of the NESHAP. As was noted by commenters, most jurisdictions already require annual, or more frequent testing and, so, this will add minimal burden beyond that already required of the sources.

Comment. One commenter said that in the event that the Agency retains the provisions for designating exceedances of operating parameter ranges as violations, he supports the alternative method of setting the operating range for parameters of the air pollution control device.

Response. The alternative for establishing operating ranges based upon prior performance test results was retained in the final rule.

4. Simultaneous Testing

Comment. Two commenters said the requirement for simultaneous testing would be burdensome for most facilities with multiple emission points because, read strictly, this would require multiple test crews and equipment whenever dealing with multiple emission points. One of the commenters said this requirement would add nothing to the quality of the information gathered. The other commenter found ambiguity in the word "simultaneous." He questioned whether "simultaneous" meant exactly at the same time, or within a certain number of minutes or hours. Also, the commenter said the processes undertaken at these facilities are continuous operations and variations within these continuous operations would be expected to be slight. Finally, the commenter said simultaneous performance testing had never been required by the existing NSPS on which the proposed NESHAP were based. The commenter said under the NSPS, the relevant regulatory authority establishes performance testing requirements based on the circumstances presented by individual facilities. The commenter said that the NSPS performance testing requirements have been in place for more than 20 years and there is no suggestion that the current approach to performance testing is inadequate or inappropriate. So, he recommended that the timing of performance testing be decided by the Administrator on a case-by-case basis.

Response. Since there is a limited number of sources where multiple emissions points are present and there are no known instances where testing has been a problem in the past, the Agency decided not to make simultaneous testing mandatory in the final rule. The site-specific test plan required by § 63.7(c)(2) of the general provisions will cause development of test plans that can address the concerns which lead the Agency to propose simultaneous testing.

5. Process Monitoring Requirements for Purified Phosphoric Acid (PPA) Plants

Comment. One commenter recommended that the proposed process feed rate monitoring requirements be amended to delete reference to PPA plants. They noted that their plant records P_2O_5 feed to the process on a daily basis, and that, given the averaging period for MIBK additions, continuous recording of feed rate is unnecessary. In addition, the commenter recommended substituting "product" for "stripped" in connection with the descriptions of the acid streams in proposed § 63.604(f)(1) to distinguish them from those referenced in proposed § 63.604(f)(2).

Response. The Agency agrees with the commenter and the regulations have been appropriately changed.

6. Other

Comment. One commenter opined that approval authority for operating parameter ranges should be broadened. As proposed, §§ 63.604(d)(2) and 63.624(d)(2) required that pressure drop and liquid flow rate ranges be approved by "the permitting authority." The commenter was concerned that limiting approval authority to the permitting authority was unnecessarily restrictive and could result in the inability of an owner or operator to establish operating parameter ranges because there may be, at the relevant time, no "permitting authority" to give approval. To address this potential problem, the commenter recommended that operating parameter range approval authority be vested in the "Administrator."

Response. That term was deleted from the final rule which, instead, now refers to the Administrator as defined in the General Provisions 40 CFR, part 63, 63.2 Definitions.

Comment. One commenter recommended that the proposal (§§ 63.605(c)(3)(ii) and 63.625(c)(3)(ii)), which would require that the P_2O_5 content of the feed to the processes subject to the NESHAP be determined in accordance with Method 9 of the Association of Official Analytical Chemists (AOAC), be revised. The commenter observed that Method 9 was the accepted method for P_2O_5 determinations in 1974 when it was specified by, and incorporated by reference in, the NSPS for the processes subject to the proposed NESHAP. In the intervening 23 years, AOAC has developed and specified more advanced methods for making the P_2O_5 determination, including Methods 962.02, 969.02, and 978.03. The commenter recommended that in order to avoid specifying outdated methods for the P_2O_5 determination; and in order to keep this section of the NESHAP "evergreen," proposed 40 CFR 63.605(c)(3)(ii) and 63.625(c)(3)(ii) be revised to read: "(ii) The P_2O_5 content (Rp) of the feed shall be determined in accordance with the method(s) of the Association of Official Analytical Chemists."

Response. The Agency agrees that the specified AOAC methods are appropriate methods to determine the total phosphorus content of fertilizer, has amended § 63.14 to incorporate by reference AOAC methods 929.01, 929.02, 957.02, 958.01, 962.02, 969.02, and 978.01, and has added appropriate references to those methods in the rule. The Agency also has identified appropriate test methods published by The Association of Florida Phosphate Chemists to quantify total phosphorus content of fertilizer. In addition the Agency has added appropriate references to methods published by The Association of Florida Phosphate Chemists to quantify total phosphorus content of phosphoric acid, superphosphoric acid, triple superphosphate, and ammonium phosphate.

The commenter suggested that a general reference to AOAC methods was a way to avoid citing outdated methods. The Agency does not agree that this is acceptable since changes to a method could affect the stringency of the regulation. It is therefore important that the Agency review changes in consensus methods to assure that this does not inadvertently happen. The Agency accomplishes this by citing a specific version of a consensus method.

Comment. A commenter recommended that the determination of whether pressure drop is measured across each scrubber in the process scrubbing system or across the entire scrubbing system be left to the Administrator on a case-by-case basis. The commenter noted that production facilities subject to the NESHAP employ various types of scrubbers, and various scrubber configurations, as a means of achieving compliance with the current NSPS and that these same systems will be used to achieve compliance with the NESHAP. The commenter said that, because of the variation in the types and configurations of scrubbers used to achieve compliance, a requirement to

measure the total pressure drop across each scrubber in the process scrubbing system in all cases could be unnecessarily burdensome. The commenter went on to say that monitoring of both pressure drop and flow rate may not be appropriate in all cases and that the determination of the appropriate operating parameter(s) for monitoring should be made on a case-by-case basis. The commenter posited that the requirement to install continuous parameter monitoring systems for both pressure drop and flow rate in all cases could be unduly burdensome, inappropriate and not supported by the record. The commenter said whether pressure drop or flow rate is the relevant parameter for monitoring turns largely on the HAP being controlled by the relevant NESHAP.

Response. The documentation of the proposed NESHAP made clear that the Agency was aware of the wide range of possible scrubber configurations that can be and are used to meet the NESHAP level of control. As written, the rules provide sources with flexibility to meet the emission limits in the manner most efficient for a given source. Accordingly, when choosing to use multiple control devices to achieve limits that can be met by a single device, a source also accepts the requirements attendant to operating and monitoring those devices. To allow sources to monitor only chosen components of control systems as suggested by the commenters would undermine the effectiveness of the monitoring requirements in assessing the overall performance of controls. The control systems are essentially doing the same job regardless of whether removal of pollutants is occurring in one or a series of vessels. The main concern is one of providing sufficient time for the effluent gases to contact an absorbent liquid. The key parameters therefore are contact time as reflected by pressure drop and sufficient quantities of absorbent as reflected by liquid flow rate. The overall operating effectiveness of the controls is reflected in those two parameters.

Comment. One commenter questioned the two hour test time in proposed § 63.605(e)(1) which would require that the sampling time for each run of a performance test for phosphate rock calciner particulate matter emissions be "at least 2 hours." Further, the commenter believed that the equipment employed in performing the relevant reference method would be incapable of producing accurate results when operated for a two-hour period due to the plugging of the particulate matter filters involved. Consequently, the commenter suggested that the per-run sampling time for particulate matter performance testing of phosphate rock calciners be set at one hour.

Response. There are two factors generally considered when specifying a minimum particulate matter (Method 5) sampling time in a regulation. The first priority is to assure that sufficient sample mass would be collected to obtain quantitative results with an acceptable degree of confidence at the level of the emission limit. The sample size needed to determine compliance at concentrations of 0.040 grains per dry standard cubic foot is small enough that one hour is a sufficient sampling time. The second factor is the time necessary to obtain a sample that represents normal process operational cycles. Calcination is a continuous operation. Hence, this is not an overriding factor. Thus, consistent with the commenter's suggestion, the Agency is specifying a minimum sampling time for each performance test run of 1 hour.

Comment. One commenter said the Agency recognized in the preamble to the proposed NESHAP that performance testing requirements for uncontrolled GTSP storage buildings have not yet been proposed by the agency and reserved the right to comment on these performance testing requirements when they are proposed.

Response. The Agency previously promulgated Methods 13 A and B which are applicable to GTSP storage buildings. Sources electing to determine compliance without control devices or stacks need to develop site-specific test protocols that are equivalent to Method 13. Source owners wanting to assure compliance in an alternative manner should propose a measurement procedure in their site-specific test plans, required by § 63.7(c)(2). The regulation requires that the owner or operator submit those plans to the Agency for review within twelve months of promulgation. The Administrator's review procedure is governed by § 63.7(c)(3). In the interest of maintaining uniformity in the implementation of the NESHAP, the Administrator has retained from delegation the authority to approve site-specific test plans for uncontrolled granular triple superphosphate storage buildings developed pursuant to § 63.7(c)(2)(i). This retention of authority is contained in § 63.629 entitled "Miscellaneous requirements."

C. Emission Limits

1. General

Comment. One commenter expressed the opinion that the Agency has proposed reasonable emissions limits which can be reasonably met using commercially available control technologies.

Response. None required.

2. Wet Process Phosphoric Acid (WPPA) Plants

Comment. One commenter said the Agency should amend the standard for existing WPPA facilities to be the same as for new WPPA facilities because the proposed action failed to consider and analyze the economic advantage that the proposed standard would give existing facilities over new facilities.

Also, the commenter said the proposed MACT floor standard for existing facilities failed to consider the benefits of airborne radionuclides reductions achieved by the proposed new facility standard. Citing the Agency's proposal not to exercise its statutory authority to go "beyond-the-floor" and require more stringent controls on existing WPPA plants based upon EPA's analysis of the health impacts of HF and HAP metals, the commenter was unaware of any Agency analysis of the human health and environmental benefit. The commenter maintained that the Agency was required by section 112(d) to evaluate the public health benefit and the environmental benefit which would result from the decreased radionuclide emissions associated with the particulate if existing WPPA facilities were required to meet the new source WPPA standard for HF emissions.

Response. The Agency's actions have been guided by the language of the Act. The Act clearly states that standards for new and existing sources should be determined differently. The commenter was correct in his observation that the Agency has a duty to consider going beyond the floor level of control for existing sources.

For this rulemaking, there were no data which to base analyses of additional reductions in radionuclide emissions. There was information on HF and HAP metals emissions. So, the Agency's analysis for going beyond the MACT floor focused upon those pollutants.

As a part of that consideration, the Agency first explored the possibility that different control technologies were available and demonstrated for the classes of sources being controlled by today's action. None were found that had been demonstrated and could be applied without creating additional negative impacts on other environmental media. The Agency also considered whether the new source emission limits could be applied to

existing sources. The emissions data showed that high levels of control were being achieved in both cases and that there was minimal opportunity for incremental reductions to be achieved in a cost-effective manner by going from the existing-source MACT floors to the levels of new source MACT. As discussed above (I. B.), a simple calculation of the application of new source MACT in place of existing source MACT for the subcategory of WPPA plants, which have the greatest differential between the two levels of control, indicates that the costs would be unreasonable. In that example, the annualized capital cost of achieving the additional annual HF reduction of 0.34 tons per year was $17,253 per year. There, the cost effectiveness of the additional reduction would be $50,744 per ton of additional HF removed, which the Agency considers to be inappropriate at this time.

3. Evaporative Cooling Towers at Phosphoric Acid Manufacturing Plants

Comment. Commenters support the Agency's proposed requirement to forbid the introduction of liquids containing the effluent from air pollution control devices into any evaporative cooling tower. They agree that it does not make sense to scrub hydrogen fluoride and other HAPs from potential emission points and then allow these HAPs to evaporate when the scrubber water is routed to evaporative cooling towers.

One commenter said that separating water discharges of pollution control devices from the evaporative cooling towers would cost one source in its jurisdiction approximately $0.4 million for process alterations. The commenter stated that it could cause the source various operational problems of increased water consumption and plant water effluent, for which the source has no water effluent-handling facilities outside of land application.

One commenter stated that his is the only existing facility affected by this proposal and estimates compliance costs will be several hundred thousand dollars. He commented that the Agency had not considered the benefits or the compliance costs of the proposed work standard and that § 63.602(e) should be deleted.

Response. For phosphoric acid manufacturing, the Agency has elected to base NESHAP upon the floor level of control. This is the least stringent option permitted by the Act. Any consideration of costs would be of significance only for consideration of options for control levels exceeding the floor level of stringency.

Comment. Two commenters noted that the language for existing and new evaporative cooling towers does not agree and proposed that § 63.602(e) should be used for both.

Response. The Agency agrees that the language for existing and new evaporative cooling towers should have been identical. It was the Agency's intent to use the language described for existing sources for new ones also and this has been changed on the final rule.

4. Phosphate Rock Calciners and Dryers

Comment. One commenter expressed the opinion that the proposed particulate matter limit of 0.040 grain per dry standard cubic foot (gr/dscf) for calciners is readily achievable and went on to note that emissions below 0.025 gr/dscf have been achieved for at least one calciner. The commenter suggested that the Agency should also limit emissions of fluorides from calciners.

Response. The Agency agrees with the comments upon the achievability of the proposed emissions limits. The first number referred to by the commenter was selected as MACT for existing calciners via the rationale in the proposal. The limit selected for existing sources was established on the basis of test data for several calciners that actually process phosphate ore and the data show that the emissions limits can be met on an ongoing basis. The lower number given by the commenter has been achieved by calciners in other categories. However, the commenter provided no information that this level of control is achievable for phosphate rock calciners. The selection of new source MACT described in the proposal was made using data specific to this industry to ensure achievability. The Agency did consider setting a fluoride limit for calciners. The wet scrubbers used in the industry for control of particulate matter also capture hydrogen fluoride. Even if the Agency had established an HF floor, it would have been based upon the same control devices that provided the basis for setting the particulate limit.

5. Purified Phosphoric Acid (PPA) Plants

Comment. One commenter initially recommended that the level of the proposed MIBK standard should be changed from that which was proposed. Included with the comments was information describing plant modifications, updated MIBK inventory records and process records from which emissions could be determined. The Agency reviewed the updated information and concluded that it supported neither the proposed standards nor those suggested in the commenter's recommendations. To clarify the comment, the commenter consulted with its State air pollution control agency to discuss alternatives. Two commenters stated that the leak detection and repair (LDAR) provisions of 40 CFR part 63, subpart H would be a workable means of addressing fugitive emissions. Other commenters stated that the LDAR program would not address tank and stack emissions and they supported keeping the proposed requirements to maintain the chiller stack temperature and the MIBK concentration of the raffinate (process waste materials) and product acid within specified limits.

Response. One commenter manufactures PPA through a solvent extraction method. The plant emits MIBK, which is a HAP. Fugitive emissions of MIBK from valves, flanges, and seals are reduced by means of an ongoing maintenance and repair program. As the lone PPA facility in the source category, its control methods constitute the MACT floor for controlling fugitive emissions of MIBK. At proposal, the Agency translated the source's maintenance and repair program into a numerical limit on MIBK that was to be determined through plant production and MIBK makeup records. The proposal was based upon the premise that the MIBK makeup requirement was a result of fugitive emissions. That approach was proposed because the Agency thought that doing so would simplify enforcement of a standard based upon effectiveness of the work practices in place at the plant for limiting process losses of MIBK. In response to a commenter, the Agency reviewed information in the record prior to proposal and the additional information provided by the commenter for the purpose of determining whether the proposed numerical limit would be an appropriate means of implementing MACT. The data indicated that a numerical limit could not be established. Emissions were not related to production and, therefore, the proposed standard which tied allowable emissions to the production rate was not a valid approach.

The MIBK cannot be emitted through a conveyance designed and constructed to capture this pollutant.

Upon consideration of the fugitive nature of these emissions, the available information and the public comments received, the Agency has concluded that it is not feasible to prescribe or enforce an emission standard for control of these emissions. In section 112(h)(1), the Act provides that the Administrator may prescribe a work practice standard

consistent with the provisions of section 112(d) in lieu of an emission standard, if it is not feasible to prescribe or enforce an emission standard for control of a HAP. In this instance, the work practices at the plant constitute the floor level of control. The Agency agrees with the commenters recommendation that the leak detection and repair (LDAR) provisions of 40 CFR part 63, subpart H provides a means of expressing the work practices as a regulatory requirement. The LDAR provisions in subpart H were determined during development of the hazardous organics NESHAP to be MACT for fugitive emissions sources with similar characteristics to those of the one plant emitting MIBK. After considering all available information, the Agency has concluded that subpart H is at least equivalent to the facility's current practices and has adopted the LDAR provisions of the HON as part of the MACT controls for this process. Accordingly, the Agency has referenced the subpart H requirements in today's rulemaking. The Agency is keeping the proposed requirements to monitor and maintain the chiller stack temperature and the MIBK concentration of the raffinate and product acid within specified limits.

Comment. One commenter suggested generalizing the definition of a PPA plant by modifying the proposed language to read as follows: "Purified phosphoric acid plant means any facility which uses solvent extraction to separate impurities from wet process phosphoric acid product acid for the purposes of rendering the product suitable for industrial, manufacturing or food grade uses."

Response. The Agency found the commenter's suggestion acceptable and has incorporated it into the final rule with a wording change that clarifies that coverage is limited to those sources employing a HAP compound as a solvent. So, the rules will effectively cover only one of the two processes now in use because the second process does not emit HAPs.

6. *Granular Triple Superphosphate (GTSP) Storage Buildings*

Comment. One commenter supported the Agency's proposed approach limiting applicability for GTSP storage buildings to only those storage buildings co-located with GTSP plants. The commenter concurred with the Agency's rationale and cited additional reasons why the NESHAP for GTSP storage buildings should be made applicable only to such storage buildings collocated with GTSP plants. The commenter said requirements of the proposed NESHAP for such facilities were based directly upon the pre-existing NSPS and said his review of the background documents associated with the original NSPS rulemaking indicated it was clear that the Agency intended that the NSPS apply only to collocated GTSP storage facilities. Furthermore, he noted the only GTSP storage facilities sampled in connection with the development of the NSPS were collocated facilities.

As a consequence of review of the public record, the commenter made several specific suggestions about the proposed rules. First, he said the definition of "fresh" GTSP in proposed § 63.621 should be redefined if the Agency does not limit the applicability of the NESHAP to collocated GTSP storage facilities. The commenter suggested that for regulatory purposes, the appropriate inquiry is the extent to which GTSP in storage actually emits significant amounts of fluorides. The commenter provided engineering data on measured fluoride emissions from stored GTSP and said the data demonstrate that the vast majority of fluoride emissions occur within 48 hours of the production of GTSP. The commenter recommended that the definition of "fresh" GTSP be revised to read: "Fresh granular Triple superphosphate means granular Triple superphosphate produced within the preceding 72 hours" based on the data provided.

The commenter also said that the percentage of fresh GTSP that must be present during performance testing would also have to be revised accordingly. If this were not done, no existing GTSP plant would be capable of producing "fresh" GTSP at a rate which would permit the current 20 percent limitation to be met. The commenter recommended that the percentage of the total amount of stored GTSP which must be fresh at performance testing should also be revised from 20 percent to six percent.

Response. In general, the Agency agrees with the commenter's conclusions and recommendations. The proposed approach was to adopt the technical component of the NSPS and to add language exempting GTSP storage buildings co-located with GTSP process lines. Shortly after proposal, the co-location issue and the technical concerns raised by the commenter also arose in the context of the NSPS itself. The NSPS was subsequently revised (see 62 FR 18308) to address those concerns. The main features of the revised NSPS were a change to the definition of "fresh GTSP" that was consistent with the commenter's recommendation and a provision requiring producers of GTSP not to ship freshly produced GTSP until it had cured. In effect, the producers were to hold the GTSP in their storage buildings until the HF emissions had tapered off as a result of curing. This, in effect, accomplished the purpose of the proposed NESHAP with regard to limiting applicability to co-located storage buildings. In fact, the approach of the revised NSPS better accomplished that purpose by more clearly addressing which storage buildings were subject to the rules. Since, the revised NSPS addresses the concerns voiced by the commenter and the Agency considers the revised NSPS to better accomplish the purposes of establishing MACT, the final rule for this NESHAP has been amended to reflect the requirements of the NSPS, as revised.

7. *Cooling Ponds.*

Comment. One commenter said that the Agency must regulate the corrosive hazardous waste in the cooling pond either under this rule or by a definitive deadline under RCRA. The commenter said that the proposed HF standards would require the discharge of air pollution scrubber water containing HF into cooling pond water resulting in unregulated corrosive hazardous waste discharge to ground waters and surface waters. The commenter added that the Agency's analysis of the non-air impacts of releases of pollution from cooling ponds did not discuss the cooling pond water pH issue and the commenter was unable to find any discussion of the non-air impacts of the surface and groundwater releases from these ponds resulting from putting additional HF into the ponds. The commenter suggested that addition of more HF to the cooling ponds will lower the pH of these ponds even further below the corrosive hazardous waste standard of a pH of 2.0. As such, the commenter maintained that the proposal did not accomplish the section 112(d)(2) mandate that emission standards "shall require the maximum degree of reduction in the emissions of the hazardous air pollutants subject to this section" achievable "taking into consideration costs and any non-air quality health and environmental impacts and energy impacts." The commenter believed that section 112(d)(2) required EPA to consider: (a) the enclosure of systems to eliminate emissions; (b) the collection, capture or treatment of such pollutants when released from a process, stack or storage facility; or, (c) design standards for processes.

In addition, the commenter said the proposed rule also did not comply with

the Pollution Prevention Act because the proposed rule did not address the cooling pond water corrosive hazardous issue by EPA using its powers under section 112 of the Act or under RCRA to eliminate or reduce the surface and groundwater pollution from the HF in the cooling ponds.

Response. Although this rulemaking is focused upon air emissions and regulating cooling ponds with respect to RCRA goals would be outside the scope of this action, the Agency has considered the impacts of MACT upon other media. An engineering analysis of options for addressing the HF content of cooling ponds was included in the docket prior to proposal as item II-B-9. As part of that analysis, consideration was given to a process that would eliminate flows to cooling ponds as encouraged by the Pollution Prevention Act. While the Agency found the new process promising, it was not demonstrated under commercial conditions and could not be adopted as an available control technology. This was specifically discussed in the proposal (61 FR 68444).

As the preamble to the proposed rules indicated, it is the Agency's expectation that five process lines would need to upgrade or replace existing controls to meet the NESHAP. Since those facilities currently route their scrubber effluent to cooling ponds, the effects of the rule would constitute a very small incremental change to current practices at those facilities. Given the relatively small contribution of scrubber effluent to the ponds and buffering effects of the complex mixture of chemicals in the ponds, there would be no observable effect resulting from changes to the air pollution controls.

D. Other Comments

1. *Determination of Major Source Status*

Comment. One commenter noted that pursuant to 40 CFR 63.1 (b)(3), owners or operators of stationary sources potentially subject to the NESHAP must make an initial applicability determination concerning whether or not they are a major source and, therefore, subject to the NESHAP. The commenter acknowledged that this applicability determination is specifically made the responsibility of the owner or operator of a stationary source. The commenter asked that in order to ensure that the statements concerning the number of major sources contained in the December 27, 1996 preamble do not inadvertently lead to "prejudgments" on major source determinations, the Agency should specifically recognize, in the preamble to the final NESHAP, that the calculations and the permit report used as the basis for the estimates referred to in the proposal notice are not the exclusive sources to be relied upon in making such major source determinations. The commenter requested the Agency to explicitly state that such determinations may be made upon any relevant data or information, including, but not limited to, the calculation procedure used by the Agency.

Response. It is a normal practice for the Agency to examine the impacts of its rules upon the environment and upon the regulated community. In its estimates of the impacts of the proposed rules, the Agency projected that 15 facilities may be major sources subject to this NESHAP. Those estimates are the Agency's expectations and do not constitute a determination of major source status for individual sources for purposes of Title V operating permits. However, the Agency does consider its methods of estimation to be sound and would carefully examine any analyses provided by sources that indicated lesser amounts of emissions. In particular, the argument by industry that silica or free ammonia remove all available HF is not supported by the FTIR data available for this rulemaking. If one could assume that sufficient quantities of reactants, such as silica and ammonia in this case, were present to theoretically drive a reaction to completion, real world actualities such as imperfect mixing or equilibrium limitations would prevent complete reactions of available ingredients from occurring. Thus, regardless of the silica or ammonia content of the emissions streams for this industry, it is expected that HF will be present in the final exhaust. The most definitive approach for sources to employ to determine their individual major source status would be for sources to directly measure for HAP compounds using FTIR via a test method validated per EPA Method 301.

2. NSPS Exemption

Comment. One commenter observed that proposed §§ 63.610 and 63.630 would exempt any "process component" subject to the NESHAP from otherwise applicable NSPS. The commenter stated that the term "process component" is not defined in the proposed NESHAP or in the Act. In order to avoid any subsequent confusion on the scope of the NSPS exemption, the commenter recommended that the term "process component" be replaced by the term "affected source" or, alternatively, that the term "process component" be specifically defined.

Response. The Agency agrees with the commenter and has replaced the term "process component" with the term "affected source." Further, while reviewing the proposed exemption to determine its response to the commenter, the Agency found that the timing of the performance test as required in the general provisions could lead to further confusion as to a source's compliance status during the period between the compliance date of the NESHAP and completion of the performance test. The final rule has been re-worded to require the source to demonstrate compliance via a performance test by the compliance date for the NESHAP and to have a valid operating permit pursuant to Title V to qualify for the NSPS exemption.

3. Draft Technical Support Document (TSD)

Comment. One commenter said that throughout the draft TSD, companies involved in the manufacture of phosphoric acid or the production of phosphate fertilizer were often misidentified. Also, the commenter noted that several of the production and other values given in the TSD were inaccurate and urged the Agency to use the most accurate and up-to-date values available. With regard to the discussion on nutrient carry-over and industry trends, the commenter cited some concerns and asked that the sections quoted in his comment letter be deleted from the draft TSD or revised.

One commenter provided additional information on the type of processes present at two plants in its jurisdiction. The commenter highlighted the production of a unique kind of GTSP from phosphate ore and limestone at one plant. That source makes "GTSP" by acidizing limestone with phosphoric acid and is different from the normal process which acidifies phosphate ore with phosphoric acid. The commenter said GTSP thus made from limestone does not fall under the definition stated in the proposed standards. The information about the second source noted a change of ownership.

Response. The original draft of the TSD was sent to outside reviewers, including the commenters, and was subsequently revised according to comments received. The draft TSD in the docket was current as of May 1995. The purpose of the draft TSD was to assemble the information upon which MACT could be established and various environmental and economic impacts could be assessed. The draft TSD also presented the Agency's methodologies and projections of the impacts of the NESHAP as they were envisioned at that

time. Subsequently, companies have been bought and sold and the productive output of the industry has changed. Newer information and analyses pertinent to the rulemaking have since been made available and added to the docket. Thus, given that the draft TSD has served its original purpose and any newer relevant information is in the docket, the Agency will not revise the draft TSD.

4. Applicability Diammonium and/or Monoammonium Phosphate (DAP/MAP) Emission Limits

Comment. One commenter described one of his sources that manufactures MAP/DAP using thermal process phosphoric acid, instead of WPPA. The commenter cited the information in the TSD to support his observation that information available to the Agency indicate that HAP emissions are a concern only in those instances where WPPA is used to manufacture DAP/MAP. The commenter requested that the Agency clarify the applicability of the NESHAP to exclude those sources not using WPPA to manufacture DAP/MAP.

Response. The Agency agrees with the commenter and the regulations in subpart BB have been revised by incorporating language the commenter provided.

5. Applicability—Research and Development Facilities

Comment. One commenter recommended that the Agency include an exemption for research and development (R&D) facilities. The commenter cited section 112(c)(7) of the Clean Air Act (the Act) and its direction to establish a separate source category for R&D facilities as necessary to ensure equitable treatment of such facilities. The commenter cited other recent NESHAP that have included R&D exemptions and said that this rulemaking needed to include such an exemption for consistency. The commenter suggested that the following language be added to the definitions contained in the rule: "Research and development activities means (1) activities conducted at a laboratory to analyze air, soil, water or product samples for contaminants, environmental impact, or quality control, (2) activities conducted to test more efficient production processes or methods for preventing or reducing adverse environmental impacts, provided that the activities do not include the production of an intermediate or final product for sale or exchange for commercial profit, except in a de minimis manner, and (3) activities conducted at a research or laboratory facility that is operated under the close supervision of technically trained personnel the primary purpose of which is to conduct research and development into new processes and products and that is not engaged in the manufacture of products for sale or exchange for commercial profit, except in a de minimis manner."

Response. The Agency agrees with the commenter and has added appropriate language, including an R&D facility definition similar to the commenter's, into the rules. The Agency plans to issue a NESHAP applicable to R&D facilities at a later date.

6. Notification

Comment. One commenter recommended that notification, recordkeeping and reporting requirements should be coextensive with those required under the current NSPS. The proposed rules would apply §§ 63.9 and 63.10 of the NESHAP general provisions with their recordkeeping and reporting that in the commenter's opinion is neither appropriate nor justified. The commenter said the record of the NESHAP general provisions rulemaking makes it clear that the notification, recordkeeping and reporting requirements were developed to address situations where the NESHAP for a particular chemical or process would be the initial federal regulation addressing that chemical or process. The commenter said that phosphoric acid manufacturing and phosphate fertilizer production facilities have long been subject to federal regulation under the NSPS and State regulation under provisions similar to the NSPS and owner/operators of regulated sources and government regulators are familiar and adept with these preexisting notification, recordkeeping and reporting requirements. The commenter recommended that notification, recordkeeping and reporting requirements be coextensive with the requirements of the pre-existing NSPS and submitted that such an approach is consistent with 40 CFR 63.10(a)(7) which permits owners and operators subject to both NSPS and NESHAP, along with the Administrator or the state permitting authority, to mutually agree on a common schedule for submitting required reports. The commenter said his recommendation was also consistent with 40 CFR 63.10(f) which permits the Administrator to waive the recordkeeping and reporting requirements of the NESHAP general provisions.

Response. The Agency discussion in the preambles proposing and promulgating the part 63 general provisions did not support the commenter's points concerning their application to sources subject to prior regulations. Instead, the discussions made clear that the part 63 requirements, while patterned after those parts 60 and 61, were made more extensive because of the need to incorporate specific legal requirements added by the 1990 Amendments to the Act. The Agency also mentioned the importance of maintaining consistent requirements for the various source categories affected by NESHAP and minimizing case-by-case negotiations on timing and content of notification and recordkeeping activities. Last, the Agency does not concur with the commenter's interpretation of 40 CFR 63.10(a)(7). That language is specifically aimed at instances where affected sources are subject to both NSPS and NESHAP. Since this rule specifically exempts those sources subject to its requirements from duplicate coverage by NSPS, the language of § 63.10(a)(7) is not applicable.

Comment. One commenter asked for the intent of §§ 63.608 and 63.628 to be clarified. The commenter said proposed §§ 63.608 and 63.628 specified that particular reporting requirements of § 63.10 would be applicable to owners and operators of phosphoric acid manufacturing and phosphate fertilizer production facilities. Furthermore, proposed §§ 63.604 and 63.605 specified the monitoring requirements applicable to owners and operators of such facilities. Certain of the monitoring requirements otherwise applicable under 40 CFR 63.8 were not made applicable to phosphoric acid manufacturing and phosphate fertilizer production facilities. Concomitantly, the reporting requirements of § 63.10 associated with those monitoring requirements also were not made applicable to such facilities by proposed §§ 63.608 and 63.628. However, the excess emissions report which was made applicable to such facilities by proposed §§ 63.608(a)(2) and 63.628(a)(2) was required, by the NESHAP general provisions, to include information concerning certain of the monitoring requirements not made applicable to phosphoric acid manufacturing and phosphate fertilizer production facilities. The commenter asked that the Agency's intent be made specific in the final NESHAP so that it would be clear that the excess emissions report required by proposed §§ 63.608(a)(2) and 63.628(a)(2) is to include only the information relevant to the monitoring requirements

specifically imposed on phosphoric acid manufacturing and phosphate fertilizer production facilities pursuant to proposed §§ 63.604 and 63.624.

Response. The Agency explored the commenter's concerns and came to agree that the coordination of the general provisions requirements for notification, recordkeeping, reporting, and compliance dates as proposed could be improved. The sections of the rule addressing those points have been re-structured and a table has been added to specifically state the applicability of the components of the general provisions. The timing of the initial performance test relative to the compliance date and the exemption from new source performance standards were further clarified to eliminate ambiguity. These changes should ease implementation via Title V operating permits.

V. Administrative Requirements

A. Docket

The docket is an organized and complete file of all the information considered by EPA in the development of this rulemaking. The docket is a dynamic file, because material is added throughout the rulemaking development. The docketing system is intended to allow members of the public and industries involved to readily identify and locate documents so that they can effectively participate in the rulemaking process. Along with the proposed and promulgated standards and their preambles, the contents of the docket will serve as the record in the case of judicial review. (See section 307(d)(7)(A) of the Act.)

B. Executive Order 12866

Under Executive Order 12866 (58 FR 51735 (October 4, 1993)), the Agency must determine whether the regulatory action is "significant" and therefore subject to review by the Office of Management and Budget (OMB), and the requirements of the Executive Order. The Order defines "significant regulatory action" as one that is likely to result in a rule that may: (1) have an annual effect on the economy of $100 million or more or adversely affect in a material way the economy, a sector of the economy, productivity, competition, jobs, the environment, public health or safety, or State, local, or tribal governments or communities; (2) create a serious inconsistency or otherwise interfere with an action taken or planned by another agency; (3) materially alter the budgetary impact of entitlements, grants, user fees, or loan programs, or the rights and obligation of recipients thereof; or (4) raise novel legal or policy issues arising out of legal mandates, the President's priorities, or the principles set forth in the Executive Order.

It has been determined that this rule is not a "significant regulatory action" under the terms of Executive Order 12866 and is therefore not subject to OMB review. The nationwide capital and annualized costs of the NESHAP, including emission controls and associated monitoring equipment, are estimated at $1.4 million and $862,000/yr, respectively.

C. Enhancing the Intergovernmental Partnership Under Executive Order 12875

Under Executive Order 12875, the Agency may not issue a regulation that is not required by statute and that creates a mandate upon a State, local or tribal government, unless the Federal government provides the funds necessary to pay the direct compliance costs incurred by those governments, or EPA consults with those governments. If the Agency complies by consulting, Executive Order 12875 requires the Agency to provide to the Office of Management and Budget a description of the extent of the Agency's prior consultation with representatives of affected State, local and tribal governments, the nature of their concerns, copies of any written communications from the governments, and a statement supporting the need to issue the regulation. In addition, Executive Order 12875 requires EPA to develop an effective process permitting elected officials and other representatives of State, local and tribal governments "to provide meaningful and timely input in the development of regulatory proposals containing significant unfunded mandates."

Today's rule does not create a mandate on State, local or tribal governments. The rule does not impose any enforceable duties on State, local or tribal governments, because they do not own or operate any sources subject to this rule and therefore are not required to purchase control systems to meet the requirements of this rule. Accordingly, the requirements of section 1(a) of Executive Order 12875 do not apply to this rule. Nevertheless, in developing this rule, EPA consulted with States to enable them to provide meaningful and timely input in the development of this rule.

D. Unfunded Mandates Reform Act

Title II of the Unfunded Mandates Reform Act of 1995 (UMRA), Public Law 104–4, establishes requirements for Federal agencies to assess the effects of their regulatory actions on State, local and tribal governments and the private sector. Under section 202 of the UMRA, the EPA generally must prepare a written statement, including a cost-benefit analysis, for proposed and final rules with "Federal mandates" that may result in expenditures by State, local and tribal governments, in the aggregate, or by the private sector, of $100 million or more in any one year. Before promulgating an EPA rule for which a written statement is needed, section 205 of the UMRA generally requires the EPA to identify and consider a reasonable number of regulatory alternatives and adopt the least costly, most cost-effective or least burdensome alternative that achieves the objectives of the rule. The provisions of section 205 do not apply when they are inconsistent with applicable law. Moreover, section 205 allows the EPA to adopt an alternative other than the least costly, most cost-effective or least burdensome alternative if the Administrator publishes with the final rule an explanation why that alternative was not adopted. Before the EPA establishes any regulatory requirements that may significantly or uniquely affect small governments, it must have developed under section 203 of the UMRA a small government agency plan. The plan must provide for notifying potentially affected small governments, enabling officials of affected small governments to have meaningful and timely input in the development of EPA regulatory proposals with significant Federal intergovernmental mandates, and informing, educating and advising small governments on compliance with the regulatory requirements.

The EPA has determined that these final rules do not contain a Federal mandate that may result in expenditures of $100 million or more for State, local and tribal governments, in the aggregate, or the private sector in any one year. The EPA projects that annual economic impacts would be far less than $100 million. Thus, today's final rules are not subject to the requirements of sections 202 and 205 of the UMRA. In addition, the EPA has determined that these final rules contain no regulatory requirements that might significantly or uniquely affect small governments because they do not impose any enforceable duties on small governments; such governments own or operate no sources subject to these proposed rules and therefore would not be required to purchase control systems to meet the requirements of these proposed rules.

E. Regulatory Flexibility

The Agency has determined that it is not necessary to prepare a regulatory flexibility analysis in connection with this final rule. The Agency has also determined that this rule will not have a significant economic impact on a substantial number of small entities. The Agency has found that two of the twenty-one firms that potentially could be subject to the standards are small firms. Of the two, data indicate that one is an area source which would not be covered by the standards. The second source could be major and subject to the requirements of the standards. Information available to the Agency shows that the second source is able to achieve the control levels of the NESHAP using existing equipment. The testing, monitoring, recordkeeping and reporting requirements are essentially identical to current requirements and, thus, should cause little or no change in these burdens.

F. Submission to Congress and the Comptroller General

The Congressional Review Act, 5 U.S.C. 801 *et seq.*, as added by the Small Business Regulatory Enforcement Fairness Act of 1996, generally provides that before a rule may take effect, the agency promulgating the rule must submit a rule report, which includes a copy of the rule, to each House of the Congress and to the Comptroller General of the United States. The Agency will submit a report containing this rule and other required information to the U.S. Senate, the U.S. House of Representatives, and the Comptroller General of the United States prior to publication of the rule in the **Federal Register**. This rule is not a "major rule" as defined by 5 U.S.C. 804(2). This rule will be effective on the date of publication in the **Federal Register**.

G. Paperwork Reduction Act

The Office of Management and Budget (OMB) has approved the information collection requirements contained in this rule under the provisions of the Paperwork Reduction Act, 44 U.S.C. 3501 *et seq.* and has assigned OMB control number 2060–0361.

The information to be collected includes the results of annual performance testing to be conducted to demonstrate compliance with the emissions limits in the rules. At the time that performance testing will be performed, sources will be required to measure and record operating parameters for the processes and control devices. Following the performance testing, sources will be required under authority of the Clean Air Act to monitor and record operating parameters to assure that they were maintained within approved ranges, based upon values determined during the performance tests. One source will be required to monitor potential emissions from equipment leaks and to keep records of leaks detected and repairs made to correct leaks. The purpose of the monitoring and recordkeeping requirements is to provide implementing agencies information to assure that MACT is implemented on an ongoing basis.

The Agency estimated the projected cost and hour burden of the standards. The average annual reporting burden was estimated to be 132 hours per response. There will be fifteen likely respondents and reports will required twice a year. The total burden would equate to 3790 hours per year nationwide and the corresponding cost was estimated to be $121,773 per year. The total capital cost of the monitoring devices was estimated to be $564,200 of which the major cost would be for the installation of sensors to measure and record the flow of scrubbing liquid to the control devices. The annualized cost of that capital would be $53,200 per year and the operation and maintenance of the monitoring equipment was estimated as $13,300 per year. Thus, the total annualized capital and operation and maintenance costs were estimated to be $66,500 per year.

Burden means the total time, effort, or financial resources expended by persons to generate, maintain, retain, or disclose or provide information to or for a Federal agency. This includes the time needed to review instructions; develop, acquire, install, and utilize technology and systems for the purposes of collecting, validating, and verifying information, processing and maintaining information, and disclosing and providing information; adjust the existing ways to comply with any previously applicable instructions and requirements; train personnel to be able to respond to a collection of information; search data sources; complete and review the collection of information; and transmit or otherwise disclose the information. An Agency may not conduct or sponsor, and a person is not required to respond to, a collection of information unless it displays a currently valid OMB control number. The OMB control numbers for EPA's regulations are listed in 40 CFR part 9 and 48 CFR Chapter 15. EPA is amending the table in 40 CFR part 9, § 9.1 of currently approved ICR control numbers issued by OMB for various regulations to list the information requirements contained in this final rule.

H. National Technology Transfer and Advancement Act

Section 12(d) of the National Technology Transfer and Advancement Act (NTTAA), directs all Federal agencies to use voluntary consensus standards in regulatory and procurement activities unless to do so would be inconsistent with applicable law or otherwise impracticable. Voluntary consensus standards are technical standards (e.g., materials specifications, test methods, sampling procedures, and business practices) developed or adapted by one or more voluntary consensus bodies. The NTTAA requires Federal agencies to provide Congress, through annual reports to OMB, with explanations when an agency does not use available and applicable voluntary consensus standards.

Consistent with the requirements of the NTTAA, today's rulemaking incorporates the analytical methods of two consensus standard bodies. Instead of developing its own methods for determining the phosphate content of feedstocks to the processes covered by the standards, the Agency is incorporating by reference into today's rules certain analytical protocols of the Association of Official Analytical Chemists and of The Association of Florida Phosphate Chemists.

Also, consistant with the NTTAA, the EPA conducted a search to identify voluntary consensus standards for emissions test methods. The search identified 17 voluntary consensus standards that appeared to have possible use in lieu of EPA standard reference methods. However, after reviewing available standards, EPA determined that 12 of the candidate consensus standards identified for measuring emissions of the HAPs or surrogates subject to emission standards in the rule would not be practical due to lack of equivalency, documentation, validation data and other important technical and policy considerations. Five of the remaining candidate consensus standards are new standards under development that EPA plans to follow, review and consider adopting at a later date. This rule requires standard EPA methods known to the industry and States. Approved alternative methods also may be used with prior EPA epproval.

I. Executive Order 13045

Executive Order 13045: "Protection of Children from Environmental Health Risks and Safety Risks" (62 FR 19885,

April 23, 1997) applies to any rule that: (1) is determined to be "economically significant" as defined under E.O. 12866, and (2) concerns an environmental health or safety risk that EPA has reason to believe may have a disproportionate effect on children. If the regulatory action meets both criteria, the Agency must evaluate the environmental health or safety effects of the planned rule on children, and explain why the planned regulation is preferable to other potentially effective and reasonably feasible alternatives considered by the Agency.

This final rule is not subject to E.O. 13045, entitled Protection of Children from Environmental Health Risks and Safety Risks (62 FR 19885, April 23, 1997), because it does not involve decisions on environmental health risks or safety risks that may disproportionately affect children.

J. Executive Order 13084

Under Executive Order 13084, EPA may not issue a regulation that is not required by statute, that significantly or uniquely affects the communities of Indian tribal governments, and that imposes substantial direct compliance costs on those communities, unless the Federal government provides the funds necessary to pay the direct compliance costs incurred by the tribal governments, or EPA consults with those governments. If EPA complies by consulting, Executive Order 13084 requires EPA to provide to the Office of Management and Budget, in a separately identified section of the preamble to the rule, a description of the extent of EPA's prior consultation with representatives of affected tribal governments, a summary of the nature of their concerns, and a statement supporting the need to issue the regulation. In addition, Executive Order 13084 requires EPA to develop an effective process permitting elected officials and other representatives of Indian tribal governments "to provide meaningful and timely input in the development of regulatory policies on matters that significantly or uniquely affect their communities."

Today's rule does not significantly or uniquely affect the communities of Indian tribal governments. The rule does not impose any enforceable duties on the communities of Indian tribal governments, because they do not own or operate any sources subject to this rule and therefore are not required to purchase control systems to meet the requirements of this rule. Accordingly, the requirements of section 3(b) of Executive Order 13084 do not apply to this rule.

List of Subjects in 40 CFR Part 63

Environmental protection, Air pollution control, Incorporation by reference, Intergovernmental relations, Reporting and recordkeeping requirements.

Dated: April 14, 1999.

Carol M. Browner,

Administrator.

For the reasons set out in the preamble, parts 9 and 63 of title 40, chapter I of the Code of Federal Regulations are amended as follows:

PART 9—OMB APPROVALS UNDER THE PAPERWORK REDUCTION ACT

1. The authority citation for part 9 continues to read as follows:

Authority: 7 U.S.C. 135 *et seq.*, 136–136y; 15 U.S.C. 2001, 2003, 2005, 2006, 2601–2671; 21 U.S.C. 331j, 346a, 348; 31 U.S.C. 9701; 33 U.S.C. 1251 *et. seq.*, 1311, 1313d, 1314, 1318, 1321, 1326, 1330, 1342, 1344, 1345 (d) and (e), 1361; E.O. 11735, 38 FR 21243, 3 CFR, 1971–1975 Comp. p. 973; 42 U.S.C. 241, 242b, 243, 246, 300f, 300g, 300g–1, 300g–2, 300g–3, 300g–4, 300g–5, 300g–6, 300j–1, 300j–2, 300j–3, 300j–4, 300j–9, 1857 *et seq.*, 6901–6992k, 7401–7671q, 7542, 9601–9657, 11023, 11048.

2. In § 9.1 the table is amended by adding new entries under the indicated heading in numerical order to read as follows:

§ 9.1 OMB approvals under the Paperwork Reduction Act.

* * * * *

40 CFR citation	OMB control No.
* * * * *	
National Emission Standards for Hazardous Air Pollutants for Source Categories [3]	
* * * * *	
63.602–63.603	2060–0361
63.605–63.608	2060–0361
63.625–63.628	2060–0361
63.630	2060–0361
* * * * *	

[3] The ICRs referenced in this section of the table encompass the applicable general provisions contained in 40 CFR part 63, subpart A, which are not independent information collection requirements.

PART 63—NATIONAL EMISSION STANDARDS FOR HAZARDOUS AIR POLLUTANTS FOR SOURCE CATEGORIES

1. The authority for part 63 continues to read as follows:

Authority: 42 U.S.C. 7401 *et seq.*

2. Section 63.14 is amended by adding new paragraphs (g) and (h) to read as follows:

§ 63.14 Incorporation by Reference.

* * * * *

(g) The materials listed below are available for purchase from AOAC International, Customer Services, Suite 400, 2200 Wilson Boulevard, Arlington, Virginia, 22201–3301, Telephone (703) 522–3032, Fax (703) 522–5468.

(1) AOAC Official Method 978.01 Phosphorus (Total) in Fertilizers, Automated Method, Sixteenth edition, 1995, IBR approved for § 63.626(d)(3)(vi).

(2) AOAC Official Method 969.02 Phosphorus (Total) in Fertilizers, Alkalimetric Quinolinium Molybdophosphate Method, Sixteenth edition, 1995, IBR approved for § 63.626(d)(3)(vi).

(3) AOAC Official Method 962.02 Phosphorus (Total) in Fertilizers, Gravimetric Quinolinium Molybdophosphate Method, Sixteenth edition, 1995, IBR approved for § 63.626(d)(3)(vi).

(4) AOAC Official Method 957.02 Phosphorus (Total) in Fertilizers, Preparation of Sample Solution, Sixteenth edition, 1995, IBR approved for § 63.626(d)(3)(vi).

(5) AOAC Official Method 929.01 Sampling of Solid Fertilizers, Sixteenth edition, 1995, IBR approved for § 63.626(d)(3)(vi).

(6) AOAC Official Method 929.02 Preparation of Fertilizer Sample, Sixteenth edition, 1995, IBR approved for § 63.626(d)(3)(vi).

(7) AOAC Official Method 958.01 Phosphorus (Total) in Fertilizers, Spectrophotometric Molybdovanadophosphate Method, Sixteenth edition, 1995, IBR approved for § 63.626(d)(3)(vi).

(h) The materials listed below are available for purchase from The Association of Florida Phosphate Chemists, P.O. Box 1645, Bartow, Florida, 33830, Book of Methods Used and Adopted By The Association of Florida Phosphate Chemists, Seventh Edition 1991, IBR.

(1) Section IX, Methods of Analysis for Phosphate Rock, No. 1 Preparation of Sample, IBR approved for § 63.606(c)(3)(ii) and § 63.626(c)(3)(ii).

(2) Section IX, Methods of Analysis for Phosphate Rock, No. 3 Phosphorus—P_2O_5 or $Ca_3(PO_4)_2$, Method A-Volumetric Method, IBR approved for § 63.606(c)(3)(ii) and § 63.626(c)(3)(ii).

(3) Section IX, Methods of Analysis for Phosphate Rock, No. 3 Phosphorus-P_2O_5 or $Ca_3(PO_4)_2$, Method B—Gravimetric Quimociac Method, IBR

approved for § 63.606(c)(3)(ii) and § 63.626(c)(3)(ii).

(4) Section IX. Methods of Analysis For Phosphate Rock. No. 3 Phosphorus-P_2O_5 or $Ca_3(PO_4)_2$. Method C—Spectrophotometric Method. IBR approved for § 63.606(c)(3)(ii) and § 63.626(c)(3)(ii).

(5) Section XI. Methods of Analysis for Phosphoric Acid, Superphosphate, Triple Superphosphate, and Ammonium Phosphates. No. 3 Total Phosphorus-P_2O_5. Method A—Volumetric Method. IBR approved for § 63.606(c)(3)(ii), § 63.626(c)(3)(ii), and § 63.626(d)(3)(v).

(6) Section XI. Methods of Analysis for Phosphoric Acid, Superphosphate, Triple Superphosphate, and Ammonium Phosphates, No. 3 Total Phosphorus-P_2O_5. Method B—Gravimetric Quimociac Method. IBR approved for § 63.606(c)(3)(ii), § 63.626(c)(3)(ii), and § 63.626(d)(3)(v).

(7) Section XI. Methods of Analysis for Phosphoric Acid, Superphosphate, Triple Superphosphate, and Ammonium Phosphates, No. 3 Total Phosphorus-P_2O_5. Method C—Spectrophotometric Method. IBR approved for § 63.606(c)(3)(ii), § 63.626(c)(3)(ii), and § 63.626(d)(3)(v).

* * * * *

3. Part 63 is amended by adding subpart AA consisting of §§ 63.600 through 63.610 to read as follows:

Subpart AA—National Emission Standards for Hazardous Air Pollutants From Phosphoric Acid Manufacturing Plants

Sec.
63.600 Applicability.
63.601 Definitions.
63.602 Standards for existing sources.
63.603 Standards for new sources.
63.604 Operating requirements.
63.605 Monitoring requirements.
63.606 Performance tests and compliance provisions.
63.607 Notification, recordkeeping, and reporting requirements.
63.608 Applicability of general provisions.
63.609 Compliance dates.
63.610 Exemption from new source performance standards.

Appendix A to Subpart AA of Part 63—Applicability of General Provisions (40 CFR Part 63, Subpart A) to Subpart AA

Subpart AA—National Emission Standards for Hazardous Air Pollutants From Phosphoric Acid Manufacturing Plants

§ 63.600 Applicability.

(a) Except as provided in paragraphs (c) and (d) of this section, the requirements of this subpart apply to the owner or operator of each phosphoric acid manufacturing plant.

(b) The requirements of this subpart apply to emissions of hazardous air pollutants (HAPs) emitted from the following new or existing affected sources at a phosphoric acid manufacturing plant:

(1) Each wet-process phosphoric acid process line. The requirements of this subpart apply to the following emission points which are components of a wet-process phosphoric acid process line: reactors, filters, evaporators, and hot wells;

(2) Each evaporative cooling tower at a phosphoric acid manufacturing plant;

(3) Each phosphate rock dryer located at a phosphoric acid manufacturing plant;

(4) Each phosphate rock calciner located at a phosphoric acid manufacturing plant;

(5) Each superphosphoric acid process line. The requirements of this subpart apply to the following emission points which are components of a superphosphoric acid process line: evaporators, hot wells, acid sumps, and cooling tanks; and

(6) Each purified acid process line. The requirements of this subpart apply to the following emission points which are components of a purified phosphoric acid process line: solvent extraction process equipment, solvent stripping and recovery equipment, seal tanks, carbon treatment equipment, cooling towers, storage tanks, pumps and process piping.

(c) The requirements of this subpart do not apply to the owner or operator of a new or existing phosphoric acid manufacturing plant that is not a major source as defined in § 63.2.

(d) The provisions of this subpart do not apply to research and development facilities as defined in § 63.601.

§ 63.601 Definitions.

Terms used in this subpart are defined in the Clean Air Act, in § 63.2, or in this section as follows:

Equivalent P_2O_5 feed means the quantity of phosphorus, expressed as phosphorous pentoxide, fed to the process.

Evaporative cooling tower means an open water recirculating device that uses fans or natural draft to draw or force ambient air through the device to remove heat from process water by direct contact.

Exceedance means a departure from an indicator range established under this subpart, consistent with any averaging period specified for averaging the results of the monitoring.

HAP metals mean those metals and their compounds (in particulate or volatile form) that are included on the list of hazardous air pollutants in section 112 of the Clean Air Act. HAP metals include, but are not limited to: antimony, arsenic, beryllium, cadmium, chromium, lead, manganese, nickel, and selenium expressed as particulate matter as measured by the methods and procedures in this subpart or an approved alternative method. For the purposes of this subpart, HAP metals are expressed as particulate matter as measured by 40 CFR part 60, appendix A, Method 5.

Phosphate rock calciner means the equipment used to remove moisture and organic matter from phosphate rock through direct or indirect heating.

Phosphate rock dryer means the equipment used to reduce the moisture content of phosphate rock through direct or indirect heating.

Phosphate rock feed means all material entering any phosphate rock dryer or phosphate rock calciner including moisture and extraneous material as well as the following ore materials: fluorapatite, hydroxylapatite, chlorapatite, and carbonateapatite.

Purified phosphoric acid process line means any process line which uses a HAP as a solvent in the separation of impurities from the product acid for the purposes of rendering that product suitable for industrial, manufacturing or food grade uses.

Research and development facility means research or laboratory operations whose primary purpose is to conduct research and development into new processes and products, where the operations are under the close supervision of technically trained personnel, and where the facility is not engaged in the manufacture of products for commercial sale in commerce or other off-site distribution, except in a de minimis manner.

Superphosphoric acid process line means any process line which concentrates wet-process phosphoric acid to 66 percent or greater P_2O_5 content by weight.

Total fluorides means elemental fluorine and all fluoride compounds, including the HAP hydrogen fluoride, as measured by reference methods specified in 40 CFR part 60, appendix A, Method 13 A or B, or by equivalent or alternative methods approved by the Administrator pursuant to § 63.7(f).

Wet process phosphoric acid process line means any process line manufacturing phosphoric acid by reacting phosphate rock and acid.

§ 63.602 Standards for existing sources.

(a) *Wet process phosphoric acid process line.* On and after the date on which the performance test required to

be conducted by §§ 63.7 and 63.606 is required to be completed, no owner or operator subject to the provisions of this subpart shall cause to be discharged into the atmosphere from any affected source any gases which contain total fluorides in excess of 10.0 gram/metric ton of equivalent P_2O_5 feed (0.020 lb/ton).

(b) *Superphosphoric acid process line.*

(1) *Vacuum evaporation process.* On and after the date on which the performance test required to be conducted by §§ 63.7 and 63.606 is required to be completed, no owner or operator subject to the provisions of this subpart shall cause to be discharged into the atmosphere from any affected source any gases which contain total fluorides in excess of 5.0 gram/metric ton of equivalent P_2O_5 feed (0.010 lb/ton).

(2) *Submerged combustion process.* On and after the date on which the performance test required to be conducted by §§ 63.7 and 63.606 is required to be completed, no owner or operator subject to the provisions of this subpart shall cause to be discharged into the atmosphere from any affected source any gases which contain total fluorides in excess of 100.0 gram/metric ton of equivalent P_2O_5 feed (0.20 lb/ton).

(c) *Phosphate rock dryer.* On or after the date on which the performance test required to be conducted by §§ 63.7 and 63.606 is required to be completed, no owner or operator subject to the provisions of this subpart shall cause to be discharged into the atmosphere from any affected source any gases which contain particulate matter in excess of 0.10750 kilogram/metric ton of phosphate rock feed (0.2150 lb/ton).

(d) *Phosphate rock calciner.* On or after the date on which the performance test required to be conducted by §§ 63.7 and 63.606 is required to be completed, no owner or operator subject to the provisions of this subpart shall cause to be discharged into the atmosphere from any affected source any gases which contain particulate matter in excess of 0.1380 gram per dry standard cubic meter (g/dscm) [0.060 grains per dry standard cubic foot (gr/dscf)].

(e) *Evaporative cooling tower.* No owner or operator shall introduce into any evaporative cooling tower any liquid effluent from any wet scrubbing device installed to control emissions from process equipment. Each owner or operator of an affected source subject to this paragraph (e) must certify to the Administrator annually that he/she has complied with the requirements contained in this section.

(f) *Purified phosphoric acid process line.*

(1) Each owner or operator subject to the provisions of this subpart shall comply with the provisions of subpart H of this part.

(2) For any existing purified phosphoric acid process line, any of the following shall constitute a violation of this subpart:

(i) A thirty day average of daily concentration measurements of methyl isobutyl ketone in excess of twenty parts per million for each product acid stream.

(ii) A thirty day average of daily concentration measurements of methyl isobutyl ketone in excess of thirty parts per million for each raffinate stream.

(iii) A daily average chiller stack exit gas stream temperature in excess of fifty degrees Fahrenheit.

§ 63.603 Standards for new sources.

(a) *Wet process phosphoric acid process line.* On and after the date on which the performance test required to be conducted by §§ 63.7 and 63.606 is required to be completed, no owner or operator subject to the provisions of this subpart shall cause to be discharged into the atmosphere from any affected source any gases which contain total fluorides in excess of 6.750 gram/metric ton of equivalent P_2O_5 feed (0.01350 lb/ton).

(b) *Superphosphoric acid process line.* On and after the date on which the performance test required to be conducted by §§ 63.7 and 63.606 is required to be completed, no owner or operator subject to the provisions of this subpart shall cause to be discharged into the atmosphere from any affected source any gases which contain total fluorides in excess of 4.350 gram/metric ton of equivalent P_2O_5 feed (0.00870 lb/ton).

(c) *Phosphate rock dryer.* On or after the date on which the performance test required to be conducted by §§ 63.7 and 63.606 is required to be completed, no owner or operator subject to the provisions of this subpart shall cause to be discharged into the atmosphere from any affected source any gases which contain particulate matter in excess of 0.030 kilogram/metric ton per megagram of phosphate rock feed (0.060 lb/ton).

(d) *Phosphate rock calciner.* On or after the date on which the performance test required to be conducted by §§ 63.7 and 63.606 is required to be completed, no owner or operator subject to the provisions of this subpart shall cause to be discharged into the atmosphere from any affected source any gases which contain particulate matter in excess of 0.0920 gram per dry standard cubic meter (g/dscm) [0.040 grain per dry standard cubic foot (gr/dscf)].

(e) *Evaporative cooling tower.* No owner or operator shall introduce into any evaporative cooling tower any liquid effluent from any wet scrubbing device installed to control emissions from process equipment. Each owner or operator of an affected source subject to this paragraph (e) must certify to the Administrator annually that he/she has complied with the requirements contained in this section.

(f) *Purified phosphoric acid process line.*

(1) Each owner or operator subject to the provisions of this subpart shall comply with the provisions of subpart H of this part.

(2) For any new purified phosphoric acid process line, any of the following shall constitute a violation of this subpart:

(i) A thirty day average of daily concentration measurements of methyl isobutyl ketone in excess of twenty parts per million for each product acid stream.

(ii) A thirty day average of daily concentration measurements of methyl isobutyl ketone in excess of thirty parts per million for each raffinate stream.

(iii) A daily average chiller stack exit gas stream temperature in excess of fifty degrees Fahrenheit.

§ 63.604 Operating requirements.

On or after the date on which the performance test required to be conducted by §§ 63.7 and 63.606 is required to be completed, the owner/operator using a wet scrubbing emission control system must maintain three-hour averages of the pressure drop across each scrubber and of the flow rate of the scrubbing liquid to each scrubber within the allowable ranges established pursuant to the requirements of § 63.605(d)(1) or (2).

§ 63.605 Monitoring requirements.

(a) Each owner or operator of a new or existing wet-process phosphoric acid process line, superphosphoric acid process line, phosphate rock dryer, or phosphate rock calciner subject to the provisions of this subpart shall install, calibrate, maintain, and operate a monitoring system which can be used to determine and permanently record the mass flow of phosphorus-bearing feed material to the process. The monitoring system shall have an accuracy of ±5 percent over its operating range.

(b)(1) Each owner or operator of a new or existing wet-process phosphoric acid process line or superphosphoric acid process line subject to the provisions of this subpart shall maintain a daily record of equivalent P_2O_5 feed by first determining the total mass rate in metric ton/hour of phosphorus bearing feed using a monitoring system for

measuring mass flowrate which meets the requirements of paragraph (a) of this section and then by proceeding according to § 63.606(c)(3).

(2) Each owner or operator of a new or existing phosphate rock calciner or phosphate rock dryer subject to the provisions of this subpart shall maintain a daily record of phosphate rock feed by determining the total mass rate in metric ton/hour of phosphorus bearing feed using a monitoring system for measuring mass flowrate which meets the requirements of paragraph (a) of this section.

(c) Each owner or operator of a new or existing wet-process phosphoric acid process line, superphosphoric acid process line, phosphate rock dryer or phosphate rock calciner using a wet scrubbing emission control system shall install, calibrate, maintain, and operate the following monitoring systems:

(1) A monitoring system which continuously measures and permanently records the pressure drop across each scrubber in the process scrubbing system in 15-minute block averages. The monitoring system shall be certified by the manufacturer to have an accuracy of ±5 percent over its operating range.

(2) A monitoring system which continuously measures and permanently records the flow rate of the scrubbing liquid to each scrubber in the process scrubbing system in 15-minute block averages. The monitoring system shall be certified by the manufacturer to have an accuracy of ±5 percent over its operating range.

(d) Following the date on which the performance test required in § 63.606 is completed, the owner or operator of a new or existing affected source using a wet scrubbing emission control system and subject to emissions limitations for total fluorides or particulate matter contained in this subpart must establish allowable ranges for operating parameters using the methodology of either paragraph (d)(1) or (2) of this section:

(1) The allowable range for the daily averages of the pressure drop across each scrubber and of the flow rate of the scrubbing liquid to each scrubber in the process scrubbing system is ± 20 percent of the baseline average value determined as a requirement of § 63.606(c)(4), (d)(4), or (e)(2). The Administrator retains the right to reduce the ± 20 percent adjustment to the baseline average values of operating ranges in those instances where performance test results indicate that a source's level of emissions is near the value of an applicable emissions standard, but, in no instance shall the adjustment be reduced to less than ± 10 percent. The owner or operator must notify the Administrator of the baseline average value and must notify the Administrator each time that the baseline value is changed as a result of the most recent performance test. The baseline average values used for compliance shall be based on the values determined during the most recent performance test. The new baseline average value shall be effective on the date following the performance test.

(2) The owner or operator of any new or existing affected source shall establish, and provide to the Administrator for approval, allowable ranges of baseline average values for the pressure drop across and of the flow rate of the scrubbing liquid to each scrubber in the process scrubbing system for the purpose of assuring compliance with this subpart. Allowable ranges may be based upon baseline average values recorded during previous performance tests using the test methods required in this subpart and established in the manner required in § 63.606(c)(4), (d)(4), or (e)(2). As an alternative, the owner or operator can establish the allowable ranges of baseline average values using the results of performance tests conducted specifically for the purposes of this paragraph using the test methods required in this subpart and established in the manner required in § 63.606(c)(4), (d)(4), or (e)(2). The source shall certify that the control devices and processes have not been modified subsequent to the testing upon which the data used to establish the allowable ranges were obtained. The allowable ranges of baseline average values developed pursuant to the provisions of this paragraph must be submitted to the Administrator for approval. The owner or operator must request and obtain approval of the Administrator for changes to the allowable ranges of baseline values. When a source using the methodology of this paragraph is retested, the owner operator shall determine new allowable ranges of baseline average values unless the retest indicates no change in the operating parameters from previous tests. Any new allowable ranges of baseline average values resulting from the most recent performance test shall be effective on the date following the retest. Until changes to allowable ranges of baseline average values are approved by the Administrator, the allowable ranges for use in § 63.604 shall be based upon the range of baseline average values proposed for approval.

(e) Each owner or operator of a new or existing purified phosphoric acid process line shall:

(1) Install, calibrate, maintain, and operate a monitoring system which continuously measures and permanently records the stack gas exit temperature for each chiller stack.

(2) Measure and record the concentration of methyl isobutyl ketone in each product acid stream and each raffinate stream once daily.

§ 63.606 Performance tests and compliance provisions.

(a)(1) On or before the applicable compliance date in § 63.609 and once per annum thereafter, each owner or operator of a phosphoric acid manufacturing plant shall conduct a performance test to demonstrate compliance with the applicable emission standard for each existing wet-process phosphoric acid process line, superphosphoric acid process line, phosphate rock dryer, and phosphate rock calciner. The owner or operator shall conduct the performance test according to the procedures in subpart A of this part and in this section.

(2) As required by § 63.7(a)(2) and once per annum thereafter, each owner or operator of a phosphoric acid manufacturing plant shall conduct a performance test to demonstrate compliance with the applicable emission standard for each new wet-process phosphoric acid process line, superphosphoric acid process line, phosphate rock dryer, and phosphate rock calciner. The owner or operator shall conduct the performance test according to the procedures in subpart A of this part and in this section.

(b) In conducting performance tests, each owner or operator of an affected source shall use as reference methods and procedures the test methods in 40 CFR part 60, appendix A, or other methods and procedures as specified in this section, except as provided in § 63.7(f).

(c) Each owner or operator of a new or existing wet-process phosphoric acid process line or superphosphoric acid process line shall determine compliance with the applicable total fluorides standards in § 63.602 or § 63.603 as follows:

(1) The emission rate (E) of total fluorides shall be computed for each run using the following equation:

$$E = \left(\sum_{i=1}^{N} C_{si} Q_{sdi} \right) / (PK)$$

Where:

E = emission rate of total fluorides, g/metric ton (lb/ton) of equivalent P_2O_5 feed.

C_{si} = concentration of total fluorides from emission point "i," mg/dscm (mg/dscf).

Q_{sdi} = volumetric flow rate of effluent gas from emission point "i," dscm/hr (dscf/hr).

N = number of emission points associated with the affected facility.

P = equivalent P_2O_5 feed rate, metric ton/hr (ton/hr).

K = conversion factor, 1000 mg/g (453.600 mg/lb).

(2) Method 13A or 13B (40 CFR part 60, appendix A) shall be used to determine the total fluorides concentration (C_{si}) and volumetric flow rate (Q_{sdi}) of the effluent gas from each of the emission points. If Method 13B is used, the fusion of the filtered material described in Section 7.3.1.2 and the distillation of suitable aliquots of containers 1 and 2, described in section 7.3.3 and 7.3.4, in Method 13 A, may be omitted. The sampling time and sample volume for each run shall be at least 60 minutes and 0.85 dscm (30 dscf).

(3) The equivalent P_2O_5 feed rate (P) shall be computed using the following equation:

$P = M_p R_p$

Where:

M_p = total mass flow rate of phosphorus-bearing feed, metric ton/hr (ton/hr).

R_p = P_2O_5 content, decimal fraction.

(i) The accountability system described in § 63.605(a) and (b) shall be used to determine the mass flow rate (M_p) of the phosphorus-bearing feed.

(ii) The P_2O_5 content (R_p) of the feed shall be determined using as appropriate the following methods (incorporated by reference—see 40 CFR 63.14) specified in the Book of Methods Used and Adopted By The Association Of Florida Phosphate Chemists, Seventh Edition 1991, where applicable:

(A) Section IX, Methods of Analysis For Phosphate Rock, No. 1 Preparation of Sample.

(B) Section IX, Methods of Analysis For Phosphate Rock, No. 3 Phosphorus-P_2O_5 or $Ca_3(PO_4)_2$, Method A-Volumetric Method.

(C) Section IX, Methods of Analysis For Phosphate Rock, No. 3 Phosphorus-P_2O_5 or $Ca_3(PO_4)_2$, Method B-Gravimetric Quimociac Method.

(D) Section IX, Methods of Analysis For Phosphate Rock, No. 3 Phosphorus-P_2O_5 or $Ca_3(PO_4)_2$, Method C-Spectrophotometric Method.

(E) Section XI, Methods of Analysis For Phosphoric Acid, Superphosphate, Triple Superphosphate, and Ammonium Phosphates, No. 3 Total Phosphorus-P_2O_5, Method A-Volumetric Method.

(F) Section XI, Methods of Analysis For Phosphoric Acid, Superphosphate, Triple Superphosphate, and Ammonium Phosphates, No. 3 Total Phosphorus-P_2O_5, Method B-Gravimetric Quimociac Method.

(G) Section XI, Methods of Analysis For Phosphoric Acid, Superphosphate, Triple Superphosphate, and Ammonium Phosphates, No. 3 Total Phosphorus-P_2O_5, Method C-Spectrophotometric Method.

(4) To comply with § 63.605(d) (1) or (2), the owner or operator shall use the monitoring systems in § 63.605(c) to determine the average pressure loss of the gas stream across each scrubber in the process scrubbing system and to determine the average flow rate of the scrubber liquid to each scrubber in the process scrubbing system during each of the total fluoride runs. The arithmetic averages of the three runs shall be used as the baseline average values for the purposes of § 63.605(d) (1) or (2).

(d) Each owner or operator of a new or existing phosphate rock dryer shall demonstrate compliance with the particulate matter standards in § 63.602 or § 63.603 as follows:

(1) The emission rate (E) of particulate matter shall be computed for each run using the following equation:

$E = (C_s Q_{sd})/(P K)$

Where:

E = emission rate of particulate matter, kg/Mg (lb/ton) of phosphate rock feed.

C_s = concentration of particulate matter, g/dscm (g/dscf).

Q_{sd} = volumetric flow rate of effluent gas, dscm/hr (dscf/hr).

P = phosphate rock feed rate, Mg/hr (ton/hr).

K = conversion factor, 1000 g/kg (453.6 g/lb).

(2) Method 5 (40 CFR part 60, appendix A) shall be used to determine the particulate matter concentration (c_s) and volumetric flow rate (Q_{sd}) of the effluent gas. The sampling time and sample volume for each run shall be at least 60 minutes and 0.85 dscm (30 dscf).

(3) The system described in § 63.605(a) shall be used to determine the phosphate rock feed rate (P) for each run.

(4) To comply with § 63.605(d) (1) or (2), the owner or operator shall use the monitoring systems in § 63.605(c) to determine the average pressure loss of the gas stream across each scrubber in the process scrubbing system and to determine the average flow rate of the scrubber liquid to each scrubber in the process scrubbing system during each of the particulate matter runs. The arithmetic average of the one-hour averages determined during the three test runs shall be used as the baseline average values for the purposes of § 63.605(d) (1) or (2).

(e) Each owner or operator of a new or existing phosphate rock calciner shall demonstrate compliance with the particulate matter standards in §§ 63.602 and 63.603 as follows:

(1) Method 5 (40 CFR part 60, appendix A) shall be used to determine the particulate matter concentration. The sampling time and volume for each test run shall be at least 60 minutes and 1.70 dscm.

(2) To comply with § 63.605(d) (1) or (2), the owner or operator shall use the monitoring systems in § 63.605(c) to determine the average pressure loss of the gas stream across each scrubber in the process scrubbing system and to determine the average flow rate of the scrubber liquid to each scrubber in the process scrubbing system during each of the particulate matter runs. The arithmetic average of the one-hour averages determined during the three test runs shall be used as the baseline average values for the purposes of § 63.605(d) (1) or (2).

§ 63.607 Notification, recordkeeping, and reporting requirements.

(a) Each owner or operator subject to the requirements of this subpart shall comply with the notification requirements in § 63.9.

(b) Each owner or operator subject to the requirements of this subpart shall comply with the recordkeeping requirements in § 63.10.

(c) The owner or operator of an affected source shall comply with the reporting requirements specified in § 63.10 as follows:

(1) *Performance test report.* As required by § 63.10, the owner or operator shall report the results of the initial and annual performance tests as part of the notification of compliance status required in § 63.9.

(2) *Excess emissions report.* As required by § 63.10, the owner or operator of an affected source shall submit an excess emissions report for any exceedance of an operating parameter limit. The report shall contain the information specified in § 63.10. When no exceedances of an operating parameter have occurred, such information shall be included in the report. The report shall be submitted semiannually and shall be delivered or postmarked by the 30th day following the end of the calendar half. If exceedances are reported, the owner or operator shall report quarterly until a request to reduce reporting frequency is approved as described in § 63.10.

(3) *Summary report.* If the total duration of control system exceedances for the reporting period is less than 1 percent of the total operating time for the reporting period, the owner or operator shall submit a summary report containing the information specified in § 63.10 rather than the full excess emissions report, unless required by the Administrator. The summary report shall be submitted semiannually and shall be delivered or postmarked by the 30th day following the end of the calendar half.

(4) If the total duration of control system operating parameter exceedances for the reporting period is 1 percent or greater of the total operating time for the reporting period, the owner or operator shall submit a summary report and the excess emissions report.

§ 63.608 Applicability of general provisions.

The requirements of the general provisions in subpart A of this part that are applicable to the owner or operator subject to the requirements of this subpart are shown in appendix A to this subpart.

§ 63.609 Compliance dates.

(a) Each owner or operator of an existing affected source at a phosphoric acid manufacturing plant shall achieve compliance with the requirements of this subpart no later than June 10, 2002. Notwithstanding the requirements of § 63.7(a)(2)(iii), each owner or operator of an existing source at an affected existing phosphoric acid manufacturing plant shall fulfill the applicable requirements of § 63.606 no later than June 10, 2002.

(b) Each owner or operator of a phosphoric acid manufacturing plant that commences construction or reconstruction of an affected source after December 27, 1996 shall achieve compliance with the requirements of this subpart upon startup of operations or by June 10, 1999, whichever is later.

§ 63.610 Exemption from new source performance standards.

Any affected source subject to the provisions of this subpart is exempted from any otherwise applicable new source performance standard contained in 40 CFR part 60, subpart T, subpart U or subpart NN. To be exempt, a source must have a current operating permit pursuant to Title V of the Act and the source must be in compliance with all requirements of this subpart. For each affected source, this exemption is effective upon the date that the owner or operator demonstrates to the Administrator that the requirements of §§ 63.604, 63.605 and 63.606 have been met.

APPENDIX A TO SUBPART AA OF PART 63.—APPLICABILITY OF GENERAL PROVISIONS (40 CFR PART 63, SUBPART A) TO SUBPART AA

40 CFR citation	Requirement	Applies to subpart AA	Comment
63.1(a)(1) through (4)	General Applicability	Yes.	
63.1(a)(5)		No	[Reserved].
63.1(a)(6) through (8)		Yes.	
63.1(a)(9)		No	[Reserved].
63.1(a)(10) through (14)		Yes.	
63.1(b)	Initial Applicability Determination	Yes.	
63.1(c)(1)	Applicability After Standard Established	Yes.	
63.1(c)(2)		Yes.	Some plants may be area sources.
63.1(c)(3)		No	[Reserved].
63.1(c)(4) and (5)		Yes.	
63.1(d)		No	[Reserved].
63.1(e)	Applicability of Permit Program	Yes.	
63.2	Definitions	Yes.	Additional definitions in § 63.601.
63.3	Units and Abbreviations	Yes.	
63.4(a)(1) through (3)	Prohibited Activities	Yes.	
63.4(a)(4)		No	[Reserved].
63.4(a)(5)		Yes.	
63.4(b) and (c)	Circumvention/Severability	Yes.	
63.5(a)	Construction/Reconstruction Applicability	Yes.	
63.5(b)(1)	Existing, New, Reconstructed Sources Requirements.	Yes.	
63.5(b)(2)		No	[Reserved].
63.5(b)(3) through (6)		Yes.	
63.5(c)		No	[Reserved].
63.5(d)	Application for Approval of Construction/ Reconstruction.	Yes.	
63.5(e)	Approval of Construction/Reconstruction	Yes.	
63.5(f)	Approval of Construction/Reconstruction Based on State Review.	Yes.	
63.6(a)	Compliance with Standards and Maintenance Applicability.	Yes.	
63.6(b)(1) through (5)	New and Reconstructed Sources Dates	Yes.	See also § 63.609.
63.6(b)(6)		No	[Reserved].
63.6(b)(7)		Yes.	
63.6(c)(1)	Existing Sources Dates	Yes.	§ 63.609 specifies dates.
63.6(c)(2)		Yes.	
63.6(c)(3) and (4)		No	[Reserved].
63.6(c)(5)		Yes.	
63.6(d)		No	[Reserved].
63.6(e)(1) and (2)	Operation & Maintenance Requirements	Yes.	§ 63.604 specifies additional requirements.

APPENDIX A TO SUBPART AA OF PART 63.—APPLICABILITY OF GENERAL PROVISIONS (40 CFR PART 63, SUBPART A) TO SUBPART AA—Continued

40 CFR citation	Requirement	Applies to subpart AA	Comment
63.6(e)(3)	Startup, Shutdown, and Malfunction Plan	Yes.	§63.604 specifies additional requirements.
63.6(f)	Compliance with Emission Standards	Yes.	§§63.602 through 605 specify additional requirements.
63.6(g)	Alternative Standard	Yes.	
63.6(h)	Compliance with Opacity/VE Standards	No	Subpart AA does not include VE/opacity standards.
63.6(i)(1) through (14)	Extension of Compliance	Yes.	
63.6(i)(15)		No	[Reserved].
63.6(i)(16)		Yes.	
63.6(j)	Exemption from Compliance	Yes.	
63.7(a)	Performance Test Requirements Applicability	Yes.	§63.609(a) applies rather than §63.7(a)(2)(iii).
63.7(b)	Notification	Yes.	
63.7(c)	Quality Assurance/Test Plan	Yes.	
63.7(d)	Testing Facilities	Yes.	
63.7(e)	Conduct of Tests	Yes.	§§63.604 and 63.605 specify additional requirements.
63.7(f)	Alternative Test Method	Yes.	
63.7(g)	Data Analysis	Yes.	
63.7(h)	Waiver of Tests	Yes.	
63.8(a)(1)	Monitoring Requirements Applicability	Yes.	
63.8(a)(2)		No	Subpart AA does not require CMS performance specifications.
63.8(a)(3)		No	[Reserved].
63.8(a)(4)		Yes.	
63.8(b)	Conduct of Monitoring	Yes.	
63.8(c)(1) through (4)	CMS Operation/Maintenance	Yes.	
63.8(c)(5) through (8)		No	Subpart AA does not require COMS/CEMS or CMS performance specifications.
63.8(d)	Quality Control	Yes.	
63.8(e)	CMS Performance Evaluation	No	Subpart AA does not require CMS performance evaluations
63.8(f)(1) through (5)	Alternative Monitoring Method	Yes.	
63.8(f)(6)	Alternative to RATA Test	No	Subpart AA does not require CEMS.
63.8(g)(1)	Data Reduction	Yes.	
63.8(g)(2)		No	Subpart AA does not require COMS or CEMS
63.8(g)(3) through (5)		Yes.	
63.9(a)	Notification Requirements Applicability	Yes.	
63.9(b)	Initial Notifications	Yes.	
63.9(c)	Request for Compliance Extension	Yes.	
63.9(d)	New Source Notification for Special Compliance Requirements.	Yes.	
63.9(e)	Notification of Performance Test	Yes.	
63.9(f)	Notification of VE/Opacity Test	No	Subpart AA does not include VE/opacity standards.
63.9(g)	Additional CMS Notifications	No	Subpart AA does not require CMS performance evaluation, COMS, or CEMS.
63.9(h)(1) through (3)	Notification of Compliance Status	Yes.	
63.9(h)(4)		No	[Reserved].
63.9(h)(5) and (6)		Yes.	
63.9(i)	Adjustment of Deadlines	Yes.	
63.9(j)	Change in Previous Information	Yes.	
63.10(a)	Recordkeeping/Reporting-Applicability	Yes.	
63.10(b)	General Recordkeeping Requirements	Yes.	
63.10(c)(1)	Additional CMS Recordkeeping	Yes.	
63.10(c)(2) through (4)		No	[Reserved].
63.10(c)(5)		Yes.	
63.10(c)(6)		No	Subpart AA does not require CMS performance specifications.
63.10(c)(7) and (8)		Yes.	
63.10(c)(9)		No	[Reserved].
63.10(c)(10) through (13)		Yes.	
63.10(c)(14)		No	Subpart AA does not require a CMS quality control program.
63.10(c)(15)		Yes.	
63.10(d)(1)	General Reporting Requirements	Yes.	

APPENDIX A TO SUBPART AA OF PART 63.—APPLICABILITY OF GENERAL PROVISIONS (40 CFR PART 63, SUBPART A) TO SUBPART AA—Continued

40 CFR citation	Requirement	Applies to subpart AA	Comment
63.10(d)(2)	Performance Test Results	Yes.	
63.10(d)(3)	Opacity or VE Observations	No	Subpart AA does not include VE/opacity standards.
63.10(d)(4) and (5)	Progress Reports/Startup, Shutdown, and Malfunction Reports.	Yes.	
63.10(e)(1) and (2)	Additional CMS Reports	No	Subpart AA does not require CEMS or CMS performance evaluations.
63.10(e)(3)	Excess Emissions/CMS Performance Reports	Yes.	§63.606(c)(2) includes additional requirements. A CMS performance report is not required.
63.10(e)(4)	COMS Data Reports	No	Subpart AA does not require COMS.
63.10(f)	Recordkeeping/Reporting Waiver	Yes.	
63.11(a)	Control Device Requirements Applicability	Yes.	
63.11(b)	Flares	No	Flares not applicable.
63.12	State Authority and Delegations	Yes.	
63.13	Addresses	Yes.	
63.14	Incorporation by Reference	Yes.	
63.15	Information Availability/Confidentiality	Yes.	

4. Part 63 is amended by adding subpart BB consisting of §§ 63.620 through 63.631 to read as follows:

Subpart BB—National Emission Standards for Hazardous Air Pollutants From Phosphate Fertilizers Production Plants

Sec.
63.620 Applicability
63.621 Definitions.
63.622 Standards for existing sources.
63.623 Standards for new sources.
63.624 Operating requirements.
63.625 Monitoring requirements.
63.626 Performance tests and compliance provisions.
63.627 Notification, recordkeeping, and reporting requirements.
63.628 Applicability of general provisions.
63.629 Miscellaneous requirements.
63.630 Compliance dates.
63.631 Exemption from new source performance standards.

Appendix A to Subpart BB of Part 63—Applicability of General Provisions (40 CFR Part 63, Subpart A) to Subpart BB

Subpart BB—National Emission Standards for Hazardous Air Pollutants From Phosphate Fertilizers Production Plants

§63.620 Applicability.

(a) Except as provided in paragraphs (c) and (d) of this section, the requirements of this subpart apply to the owner or operator of each phosphate fertilizers production plant.

(b) The requirements of this subpart apply to emissions of hazardous air pollutants (HAPs) emitted from the following new or existing affected sources at a phosphate fertilizers production plant:

(1) Each diammonium and/or monoammonium phosphate process line. The requirements of this subpart apply to the following emission points which are components of a diammonium and/or monoammonium phosphate process line: reactors, granulators, dryers, coolers, screens, and mills.

(2) Each granular triple superphosphate process line. The requirements of this subpart apply to the following emission points which are components of a granular triple superphosphate process line: mixers, curing belts (dens), reactors, granulators, dryers, coolers, screens, and mills.

(3) Each granular triple superphosphate storage building. The requirements of this subpart apply to the following emission points which are components of a granular triple superphosphate storage building: storage or curing buildings, conveyors, elevators, screens and mills.

(c) The requirements of this subpart do not apply to the owner or operator of a new or existing phosphate fertilizers production plant that is not a major source as defined in §63.2.

(d) The provisions of this subpart do not apply to research and development facilities as defined in §63.621.

§63.621 Definitions.

Terms used in this subpart are defined in the Clean Air Act, in §63.2, or in this section as follows:

Diammonium and/or monoammonium phosphate process line means any process line manufacturing granular diammonium and/or monoammonium phosphate by reacting ammonia with phosphoric acid which has been derived from or manufactured by reacting phosphate rock and acid.

Equivalent P_2O_5 feed means the quantity of phosphorus, expressed as phosphorous pentoxide, fed to the process.

Equivalent P_2O_5 stored means the quantity of phosphorus, expressed as phosphorus pentoxide, being cured or stored in the affected facility.

Exceedance means a departure from an indicator range established for monitoring under this subpart, consistent with any averaging period specified for averaging the results of the monitoring.

Fresh granular triple superphosphate means granular triple superphosphate produced within the preceding 72 hours.

Granular triple superphosphate process line means any process line, not including storage buildings, manufacturing granular triple superphosphate by reacting phosphate rock with phosphoric acid.

Granular triple superphosphate storage building means any building curing or storing fresh granular triple superphosphate.

Research and development facility means research or laboratory operations whose primary purpose is to conduct research and development into new processes and products, where the operations are under the close supervision of technically trained personnel, and where the facility is not engaged in the manufacture of products for commercial sale in commerce or other off-site distribution, except in a de minimis manner.

Total fluorides means elemental fluorine and all fluoride compounds, including the HAP hydrogen fluoride, as measured by reference methods

specified in 40 CFR part 60, appendix A, Method 13 A or B, or by equivalent or alternative methods approved by the Administrator pursuant to § 63.7(f).

§ 63.622 Standards for existing sources.

(a) *Diammonium and/or monoammonium phosphate process line.* On and after the date on which the performance test required to be conducted by §§ 63.7 and 63.626 is required to be completed, no owner or operator subject to the provisions of this subpart shall cause to be discharged into the atmosphere from any affected source any gases which contain total fluorides in excess of 30 grams/metric ton of equivalent P_2O_5 feed (0.060 lb/ton).

(b) *Granular triple superphosphate process line.* On and after the date on which the performance test required to be conducted by §§ 63.7 and 63.626 is required to be completed, no owner or operator subject to the provisions of this subpart shall cause to be discharged into the atmosphere from any affected source any gases which contain total fluorides in excess of 75 grams/metric ton of equivalent P_2O_5 feed (0.150 lb/ton).

(c) *Granular triple superphosphate storage building.*

(1) On and after the date on which the performance test required to be conducted by §§ 63.7 and 63.626 is required to be completed, no owner or operator subject to the provisions of this subpart shall cause to be discharged into the atmosphere from any affected source any gases which contain total fluorides in excess of 0.250 grams/hr/metric ton of equivalent P_2O_5 stored (5.0×10^{-4} lb/hr/ton of equivalent P_2O_5 stored).

(2) No owner or operator subject to the provisions of this subpart shall ship fresh granular triple superphosphate from an affected facility.

§ 63.623 Standards for new sources.

(a) *Diammonium and/or monoammonium phosphate process line.* On and after the date on which the performance test required to be conducted by §§ 63.7 and 63.626 is required to be completed, no owner or operator subject to the provisions of this subpart shall cause to be discharged into the atmosphere from any affected source any gases which contain total fluorides in excess of 29.0 grams/metric ton of equivalent P_2O_5 feed (0.0580 lb/ton).

(b) *Granular triple superphosphate process line.* On and after the date on which the performance test required to be conducted by §§ 63.7 and 63.626 is required to be completed, no owner or operator subject to the provisions of this subpart shall cause to be discharged into the atmosphere from any affected source any gases which contain total fluorides in excess of 61.50 grams/metric ton of equivalent P_2O_5 feed (0.1230 lb/ton).

(c) *Granular triple superphosphate storage building*

(1) On and after the date on which the performance test required to be conducted by §§ 63.7 and 63.626 is required to be completed, no owner or operator subject to the provisions of this subpart shall cause to be discharged into the atmosphere from any affected source any gases which contain total fluorides in excess of 0.250 grams/hr/metric ton of equivalent P_2O_5 stored (5.0×10^{-4} lb/hr/ton of equivalent P_2O^5 stored).

(2) No owner or operator subject to the provisions of this subpart shall ship fresh granular triple superphosphate from an affected facility.

§ 63.624 Operating requirements.

On or after the date on which the performance test required to be conducted by §§ 63.7 and 63.626 is required to be completed, the owner/operator using a wet scrubbing emission control system must maintain three-hour averages of the pressure drop across each scrubber and of the flow rate of the scrubbing liquid to each scrubber within the allowable ranges established pursuant to the requirements of § 63.625(f)(1) or (2).

§ 63.625 Monitoring requirements.

(a) Each owner or operator of a new or existing diammonium and/or monoammonium phosphate process line or granular triple superphosphate process line subject to the provisions of this subpart shall install, calibrate, maintain, and operate a monitoring system which can be used to determine and permanently record the mass flow of phosphorus-bearing feed material to the process. The monitoring system shall have an accuracy of ±5 percent over its operating range.

(b) Each owner or operator of a new or existing diammonium and/or monoammonium phosphate process line or granular triple superphosphate process line subject to the provisions of this subpart shall maintain a daily record of equivalent P_2O_5 feed by first determining the total mass rate in metric ton/hour of phosphorus bearing feed using a monitoring system for measuring mass flowrate which meets the requirements of paragraph (a) of this section and then by proceeding according to § 63.626(c)(3).

(c) Each owner or operator of a new or existing diammonium and/or monoammonium phosphate process line, granular triple superphosphate process line, or granular triple superphosphate storage building using a wet scrubbing emission control system shall install, calibrate, maintain, and operate the following monitoring systems:

(1) A monitoring system which continuously measures and permanently records the pressure drop across each scrubber in the process scrubbing system in 15-minute block averages. The monitoring system shall be certified by the manufacturer to have an accuracy of ±5 percent over its operating range.

(2) A monitoring system which continuously measures and permanently records the flow rate of the scrubbing liquid to each scrubber in the process scrubbing system in 15-minute block averages. The monitoring system shall be certified by the manufacturer to have an accuracy of ±5 percent over its operating range.

(d) The owner or operator of any granular triple superphosphate storage building subject to the provisions of this subpart shall maintain an accurate account of granular triple superphosphate in storage to permit the determination of the amount of equivalent P_2O_5 stored.

(e)(1) Each owner or operator of a new or existing granular triple superphosphate storage building subject to the provisions of this subpart shall maintain a daily record of total equivalent P_2O_5 stored by multiplying the percentage P_2O_5 content, as determined by § 63.626(d)(3), times the total mass of granular triple superphosphate stored.

(2) The owner or operator of any granular triple superphosphate storage building subject to the provisions of this subpart shall develop for approval by the Administrator a site-specific methodology including sufficient recordkeeping for the purposes of demonstrating compliance with § 63.622(c)(2) or § 63.623(c)(2), as applicable.

(f) Following the date on which the performance test required in § 63.626 is completed, the owner or operator of a new or existing affected source using a wet scrubbing emission control system and subject to emissions limitations for total fluorides or particulate matter contained in this subpart must establish allowable ranges for operating parameters using the methodology of either paragraph (f)(1) or (2) of this section:

(1) The allowable range for the daily averages of the pressure drop across each scrubber and of the flow rate of the scrubbing liquid to each scrubber in the process scrubbing system is ±20 percent of the baseline average value determined as a requirement of § 63.626(c)(4) or (d)(4). The

Administrator retains the right to reduce the ±20 percent adjustment to the baseline average values of operating ranges in those instances where performance test results indicate that a source's level of emissions is near the value of an applicable emissions standard, but, in no instance shall the adjustment be reduced to less than ±10 percent. The owner or operator must notify the Administrator of the baseline average value and must notify the Administrator each time that the baseline value is changed as a result of the most recent performance test. The baseline average values used for compliance shall be based on the values determined during the most recent performance test. The new baseline average value shall be effective on the date following the performance test.

(2) The owner or operator of any new or existing affected source shall establish, and provide to the Administrator for approval, allowable ranges of baseline average values for the pressure drop across and of the flow rate of the scrubbing liquid to each scrubber in the process scrubbing system for the purpose of assuring compliance with this subpart. Allowable ranges may be based upon baseline average values recorded during previous performance tests using the test methods required in this subpart and established in the manner required in § 63.626(c)(4) or (d)(4). As an alternative, the owner or operator can establish the allowable ranges of baseline average values using the results of performance tests conducted specifically for the purposes of this paragraph using the test methods required in this subpart and established in the manner required in § 63.626(c)(4) or (d)(4). The source shall certify that the control devices and processes have not been modified subsequent to the testing upon which the data used to establish the allowable ranges were obtained. The allowable ranges of baseline average values developed pursuant to the provisions of this paragraph must be submitted to the Administrator for approval. The owner or operator must request and obtain approval of the Administrator for changes to the allowable ranges of baseline average values. When a source using the methodology of this paragraph is retested, the owner operator shall determine new allowable ranges of baseline average values unless the retest indicates no change in the operating parameters from previous tests. Any new allowable ranges of baseline average values resulting from the most recent performance test shall be effective on the date following the retest. Until changes to allowable ranges of baseline average values are approved by the Administrator, the allowable ranges for use in § 63.624 shall be based upon the range of baseline average values proposed for approval.

§ 63.626 Performance tests and compliance provisions.

(a)(1) On or before the applicable compliance date in § 63.630 and once per annum thereafter, each owner or operator of a phosphate fertilizers production plant subject to the provisions of this subpart shall conduct a performance test to demonstrate compliance with the applicable emission standard for each existing diammonium and/or monoammonium phosphate process line, granular triple superphosphate process line, or granular triple superphosphate storage building. The owner or operator shall conduct the performance test according to the procedures in subpart A of this part and in this section.

(2) As required by § 63.7(a)(2) and once per annum thereafter, each owner or operator of a phosphate fertilizers production plant subject to the provisions of this subpart shall conduct a performance test to demonstrate compliance with the applicable emission standard for each new diammonium and/or monoammonium phosphate process line, granular triple superphosphate process line, or granular triple superphosphate storage building. The owner or operator shall conduct the performance test according to the procedures in subpart A of this part and in this section.

(b) In conducting performance tests, each owner or operator of an affected source shall use as reference methods and procedures the test methods in 40 CFR part 60, appendix A, or other methods and procedures as specified in this section, except as provided in § 63.7(f).

(c) Each owner or operator of a new or existing diammonium and/or monoammonium phosphate process line or granular triple superphosphate process line shall determine compliance with the applicable total fluorides standards in § 63.622 or § 63.623 as follows:

(1) The emission rate (E) of total fluorides shall be computed for each run using the following equation:

$$E = \left(\sum_{i=1}^{N} C_{si} Q_{sdi} \right) / (PK)$$

Where:

E = emission rate of total fluorides, g/metric ton (lb/ton) of equivalent P_2O_5 feed.

C_{si} = concentration of total fluorides from emission point "i," mg/dscm (mg/dscf).

Q_{sdi} = volumetric flow rate of effluent gas from emission point "i," dscm/hr (dscf/hr).

N = number of emission points associated with the affected facility.

P = equivalent P_2O_5 feed rate, metric ton/hr (ton/hr).

K = conversion factor, 1000 mg/g (453,600 mg/lb).

(2) Method 13A or 13B (40 CFR part 60, appendix A) shall be used to determine the total fluorides concentration (C_{si}) and volumetric flow rate (Q_{sdi}) of the effluent gas from each of the emission points. If Method 13 B is used, the fusion of the filtered material described in section 7.3.1.2 and the distillation of suitable aliquots of containers 1 and 2, described in sections 7.3.3 and 7.3.4 in Method 13 A, may be omitted. The sampling time and sample volume for each run shall be at least one hour and 0.85 dscm (30 dscf).

(3) The equivalent P_2O_5 feed rate (P) shall be computed using the following equation:

$$P = M_p R_p$$

Where:

M_p = total mass flow rate of phosphorus-bearing feed, metric ton/hr (ton/hr).

R_p = P_2O_5 content, decimal fraction.

(i) The accountability system described in § 63.625(a) and (b) shall be used to determine the mass flow rate (M_p) of the phosphorus-bearing feed.

(ii) The P_2O_5 content (R_p) of the feed shall be determined using as appropriate the following methods (incorporated by reference—see 40 CFR 63.14) specified in the Book of Methods Used and Adopted By The Association Of Florida Phosphate Chemists, Seventh Edition 1991, where applicable:

(A) Section IX, Methods of Analysis for Phosphate Rock, No. 1 Preparation of Sample.

(B) Section IX, Methods of Analysis for Phosphate Rock, No. 3 Phosphorus—P_2O_5 or $Ca_3(PO_4)_2$, Method A—Volumetric Method.

(C) Section IX, Methods of Analysis For Phosphate Rock, No. 3 Phosphorus-P_2O_5 or $Ca_3(PO_4)_2$, Method B—Gravimetric Quimociac Method.

(D) Section IX, Methods of Analysis For Phosphate Rock, No. 3 Phosphorus-P_2O_5 or Ca3$(PO_4)_2$, Method C—Spectrophotometric Method.

(E) Section XI, Methods of Analysis For Phosphoric Acid, Superphosphate, Triple superphosphate, and Ammonium Phosphates, No. 3 Total Phosphorus-P_2O_5, Method A—Volumetric Method.

(F) Section XI, Methods of Analysis For Phosphoric Acid, Superphosphate,

Triple Superphosphate, and Ammonium Phosphates, No. 3 Total Phosphorus-P_2O_5, Method B—Gravimetric Quimociac Method.

(G) Section XI, Methods of Analysis for Phosphoric Acid, Superphosphate, Triple Superphosphate, and Ammonium Phosphates, No. 3 Total Phosphorus-P_2O_5, Method C—Spectrophotometric Method.

(4) To comply with § 63.625(f)(1) or (2), the owner or operator shall use the monitoring systems in § 63.625(c) to determine the average pressure loss of the gas stream across each scrubber in the process scrubbing system and to determine the average flow rate of the scrubber liquid to each scrubber in the process scrubbing system during each of the total fluoride runs. The arithmetic averages of the three runs shall be used as the baseline average values for the purposes of § 63.625(f)(1) or (2).

(d) Each owner or operator of a new or existing granular triple superphosphate storage building shall determine compliance with the applicable total fluorides standards in § 63.622 or § 63.623 as follows:

(1) The owner or operator shall conduct performance tests only when the following quantities of product are being cured or stored in the facility.

(i) Total granular triple superphosphate is at least 10 percent of the building capacity, and

(ii) Fresh granular triple superphosphate is at least six percent of the total amount of granular triple superphosphate, or

(iii) If the provision in paragraph (d)(1)(ii) of this section exceeds production capabilities for fresh granular triple superphosphate, fresh granular triple superphosphate is equal to at least 5 days maximum production.

(2) In conducting the performance test, the owner or operator shall use as reference methods and procedures the test methods in 40 CFR part 60, appendix A, or other methods and procedures as specified in this section, except as provided in § 63.7(f).

(3) The owner or operator shall determine compliance with the total fluorides standard in §§ 63.622 and 63.623 as follows:

(i) The emission rate (E) of total fluorides shall be computed for each run using the following equation:

$$E = \left(\sum_{i=1}^{N} C_{si} Q_{sdi}\right) / (PK)$$

Where:

E = emission rate of total fluorides, g/hr/metric ton (lb/hr/ton) of equivalent P_2O_5 stored.

C_{si} = concentration of total fluorides from emission point "i," mg/dscm (mg/dscf).

Q_{sdi} = volumetric flow rate of effluent gas from emission point "i," dscm/hr (dscf/hr).

N = number of emission points in the affected facility.

P = equivalent P_2O_5 stored, metric tons (tons).

K = conversion factor, 1000 mg/g (453,600 mg/lb).

(ii) Method 13A or 13B (40 CFR part 60, appendix A) shall be used to determine the total fluorides concentration (C_{si}) and volumetric flow rate (Q_{sdi}) of the effluent gas from each of the emission points. If Method 13B is used, the fusion of the filtered material described in section 7.3.1.2 and the distillation of suitable aliquots of containers 1 and 2, described in Sections 7.3.3 and 7.3.4 in Method 13 A, may be omitted. The sampling time and sample volume for each run shall be at least one hour and 0.85 dscm (30 dscf).

(iii) The equivalent P_2O_5 feed rate (P) shall be computed using the following equation:

$$P = M_p R_p$$

Where:

M_p = amount of product in storage, metric ton (ton).

R_p = P_2O_5 content of product in storage, weight fraction.

(iv) The accountability system described in § 63.625(d) and (e) shall be used to determine the amount of product (M_p) in storage.

(v) The P_2O_5 content (R_p) of the product stored shall be determined using as appropriate the following methods (incorporated by reference—see 40 CFR 63.14) specified in the Book of Methods Used and Adopted By The Association Of Florida Phosphate Chemists, Seventh Edition 1991, where applicable:

(A) Section XI, Methods of Analysis For Phosphoric Acid, Superphosphate, Triple superphosphate, and Ammonium Phosphates, No. 3 Total Phosphorus—P_2O_5, Method A—Volumetric Method.

(B) Section XI, Methods of Analysis For Phosphoric Acid, Superphosphate, Triple superphosphate, and Ammonium Phosphates, No. 3 Total Phosphorus—P_2O_5, Method B—Gravimetric Quimociac Method.

(C) Section XI, Methods of Analysis For Phosphoric Acid, Superphosphate, Triple superphosphate, and Ammonium Phosphates, No. 3 Total Phosphorus—P_2O_5, Method C—Spectrophotometric Method, or,

(vi) The P_2O_5 content (R_p) of the product stored shall be determined using as appropriate the following methods (incorporated by reference—see 40 CFR 63.14) specified in the Official Methods of Analysis of AOAC International, sixteenth Edition, 1995, where applicable:

(A) AOAC Official Method 957.02 Phosphorus (Total) In Fertilizers, Preparation of Sample Solution.

(B) AOAC Official Method 929.01 Sampling of Solid Fertilizers.

(C) AOAC Official Method 929.02 Preparation of Fertilizer Sample.

(D) AOAC Official Method 978.01 Phosphorus (Total) in Fertilizers, Automated Method.

(E) AOAC Official Method 969.02 Phosphorus (Total) in Fertilizers, Alkalimetric Quinolinium Molybdophosphate Method.

(F) AOAC Official Method 962.02 Phosphorus (Total) in Fertilizers, Gravimetric Quinolinium Molybdophosphate Method.

(G) AOAC Official Method 958.01 Phosphorus (Total) in Fertilizers, Spectrophotometric Molybdovanadophosphate Method.

(4) To comply with § 63.625(f) (1) or (2), the owner or operator shall use the monitoring systems described in § 63.625(c) to determine the average pressure loss of the gas stream across each scrubber in the process scrubbing system and to determine the average flow rate of the scrubber liquid to each scrubber in the process scrubbing system during each of the total fluoride runs. The arithmetic averages of the three runs shall be used as the baseline average values for the purposes of § 63.625(f) (1) or (2).

§ 63.627 Notification, recordkeeping, and reporting requirements.

(a) Each owner or operator subject to the requirements of this subpart shall comply with the notification requirements in § 63.9.

(b) Each owner or operator subject to the requirements of this subpart shall comply with the recordkeeping requirements in § 63.10.

(c) The owner or operator of an affected source shall comply with the reporting requirements specified in § 63.10 as follows:

(1) *Performance test report.* As required by § 63.10, the owner or operator shall report the results of the initial and annual performance tests as part of the notification of compliance status required in § 63.9.

(2) *Excess emissions report.* As required by § 63.10, the owner or operator of an affected source shall submit an excess emissions report for any exceedance of an operating parameter limit. The report shall contain the information specified in

§ 63.10. When no exceedances of an operating parameter have occurred, such information shall be included in the report. The report shall be submitted semiannually and shall be delivered or postmarked by the 30th day following the end of the calendar half. If exceedances are reported, the owner or operator shall report quarterly until a request to reduce reporting frequency is approved as described in § 63.10.

(3) *Summary report.* If the total duration of control system exceedances for the reporting period is less than 1 percent of the total operating time for the reporting period, the owner or operator shall submit a summary report containing the information specified in § 63.10 rather than the full excess emissions report, unless required by the Administrator. The summary report shall be submitted semiannually and shall be delivered or postmarked by the 30th day following the end of the calendar half.

(4) If the total duration of control system operating parameter exceedances for the reporting period is 1 percent or greater of the total operating time for the reporting period, the owner or operator shall submit a summary report and the excess emissions report.

§ 63.628 Applicability of general provisions.

The requirements of the general provisions in subpart A of this part that are applicable to the owner or operator subject to the requirements of this subpart are shown in appendix A to this subpart.

§ 63.629 Miscellaneous requirements.

The Administrator retains the authority to approve site-specific test plans for uncontrolled granular triple superphosphate storage buildings developed pursuant to § 63.7(c)(2)(i).

§ 63.630 Compliance dates.

(a) Each owner or operator of an existing affected source at a phosphate fertilizers production plant shall achieve compliance with the requirements of this subpart no later than June 10, 2002. Notwithstanding the requirements of § 63.7(a)(2)(iii), each owner or operator of an existing affected source at a phosphate fertilizers production plant shall fulfill the applicable requirements of § 63.626 no later than June 10, 2002.

(b) Each owner or operator of a phosphate fertilizers production plant that commences construction or reconstruction of an affected source after December 27, 1996 shall achieve compliance with the requirements of this subpart upon startup of operations or by June 10, 1999, whichever is later.

(c) The owner or operator of any existing uncontrolled granular triple superphosphate storage building subject to the provisions of this subpart shall submit for approval by the Administrator a site-specific test plan for each such building according to the provisions of § 63.7(b)(2)(i) no later than June 12, 2000.

§ 63.631 Exemption from new source performance standards.

Any affected source subject to the provisions of this subpart is exempted from any otherwise applicable new source performance standard contained in 40 CFR part 60, subpart V, subpart W, or subpart X. To be exempt, a source must have a current operating permit pursuant to Title V of the Act and the source must be in compliance with all requirements of this subpart. For each affected source, this exemption is effective upon the date that the owner or operator demonstrates to the Administrator that the requirements of §§ 63.624, 63.625 and 63.626 have been met.

APPENDIX A TO SUBPART BB OF PART 63.—APPLICABILITY OF GENERAL PROVISIONS (40 CFR PART 63, SUBPART A) TO SUBPART BB

40 CFR citation	Requirement	Applies to subpart BB	Comment
63.1(a)(1) through (4)	General Applicability	Yes.	
63.1(a)(5)		No	[Reserved].
63.1(a)(6) through (8)		Yes.	
63.1(a)(9)		No	[Reserved].
63.1(a)(10) through (14)		Yes.	
63.1(b)	Initial Applicability Determination	Yes.	
63.1(c)(1)	Applicability After Standard Established	Yes.	
63.1(c)(2)		Yes	Some plants may be area sources.
63.1(c)(3)		No	[Reserved].
63.1(c)(4) and (5)		Yes.	
63.1(d)		No	[Reserved].
63.1(e)	Applicability of Permit Program	Yes.	
63.2	Definitions	Yes	Additional definitions in § 63.621.
63.3	Units and Abbreviations	Yes.	
63.4(a)(1) through (3)	Prohibited Activities	Yes.	
63.4(a)(4)		No	[Reserved].
63.4(a)(5)		Yes.	
63.4(b) and (c)	Circumvention/Severability	Yes.	
63.5(a)	Construction/Reconstruction Applicability	Yes.	
63.5(b)(1)	Existing, New, Reconstructed Sources Requirements.	Yes.	
63.5(b)(2)		No	[Reserved].
63.5(b)(3) through (6)		Yes.	
63.5(c)		No	[Reserved].
63.5(d)	Application for Approval of Construction/Reconstruction.	Yes.	
63.5(e)	Approval of Construction/Reconstruction	Yes.	
63.5(f)	Approval of Construction/Reconstruction Based on State Review.	Yes.	
63.6(a)	Compliance with Standards and Maintenance Applicability.	Yes.	
63.6(b)(1) through (5)	New and Reconstructed Sources Dates	Yes	See also § 63.629.
63.6(b)(6)		No	[Reserved].

APPENDIX A TO SUBPART BB OF PART 63.—APPLICABILITY OF GENERAL PROVISIONS (40 CFR PART 63, SUBPART A) TO SUBPART BB—Continued

40 CFR citation	Requirement	Applies to subpart BB	Comment
63.6(b)(7)		Yes.	
63.6(c)(1)	Existing Sources Dates	Yes	§ 63.629 specifies dates.
63.6(c)(2)		Yes.	
63.6(c)(3) and (4)		No	[Reserved].
63.6(c)(5)		Yes.	
63.6(d)		No	[Reserved].
63.6(e)(1) and (2)	Operation & Maintenance Requirements	Yes	§ 63.624 specifies additional requirements.
63.6(e)(3)	Startup, Shutdown, and Malfunction Plan	Yes	§ 63.624 specifies additional requirements.
63.6(f)	Compliance with Emission Standards	Yes	§§ 63.622 through 625 specify additional requirements.
63.6(g)	Alternative Standard	Yes.	
63.6(h)	Compliance with Opacity/VE Standards	No	Subpart BB does not include VE/opacity standards.
63.6(i)(1) through (14)	Extension of Compliance	Yes.	
63.6(i)(15)		No	[Reserved].
63.6(i)(16)		Yes.	
63.6(j)	Exemption from Compliance	Yes.	
63.7(a)	Performance Test Requirements Applicability	Yes	§ 63.629(a) applies rather than § 63.7(a)(2)(iii).
63.7(b)	Notification	Yes.	
63.7(c)	Quality Assurance/Test Plan	Yes.	
63.7(d)	Testing Facilities	Yes.	
63.7(e)	Conduct of Tests	Yes	§§ 63.624 and 63.625 specify additional requirements.
63.7(f)	Alternative Test Method	Yes.	
63.7(g)	Data Analysis	Yes.	
63.7(h)	Waiver of Tests	Yes.	
63.8(a)(1)	Monitoring Requirements Applicability	Yes.	
63.8(a)(2)		No	Subpart BB does not require CMS performance specifications.
63.8(a)(3)		No	[Reserved].
63.8(a)(4)		Yes.	
63.8(b)	Conduct of Monitoring	Yes.	
63.8(c)(1) through (4)	CMS Operation/Maintenance	Yes.	
63.8(c)(5) through (8)		No	Subpart BB does not require COMS/CEMS or CMS performance specifications.
63.8(d)	Quality Control	Yes.	
63.8(e)	CMS Performance Evaluation	No	Subpart BB does not require CMS performance evaluations.
63.8(f)(1) through (5)	Alternative Monitoring Method	Yes.	
63.8(f)(6)	Alternative to RATA Test	No	Subpart BB does not require CEMS.
63.8(g)(1)	Data Reduction	Yes.	
63.8(g)(2)		No	Subpart BB does not require COMS or CEMS.
63.8(g)(3) through (5)		Yes.	
63.9(a)	Notification Requirements Applicability	Yes.	
63.9(b)	Initial Notifications	Yes.	
63.9(c)	Request for Compliance Extension	Yes.	
63.9(d)	New Source Notification for Special Compliance Requirements.	Yes.	
63.9(e)	Notification of Performance Test	Yes.	
63.9(f)	Notification of VE/Opacity Test	No	Subpart BB does not include VE/opacity standards.
63.9(g)	Additional CMS Notifications	No	Subpart BB does not require CMS performance evaluation, COMS, or CEMS.
63.9(h)(1) through (3)	Notification of Compliance Status	Yes.	
63.9(h)(4)		No	[Reserved].
63.9(h)(5) and (6)		Yes.	
63.9(i)	Adjustment of Deadlines	Yes.	
63.9(j)	Change in Previous Information	Yes.	
63.10(a)	Recordkeeping/Reporting-Applicability	Yes.	
63.10(b)	General Recordkeeping Requirements	Yes.	
63.10(c)(1)	Additional CMS Recordkeeping	Yes.	
63.10(c)(2) through (4)		No	[Reserved].
63.10(c)(5)		Yes.	

APPENDIX A TO SUBPART BB OF PART 63.—APPLICABILITY OF GENERAL PROVISIONS (40 CFR PART 63, SUBPART A) TO SUBPART BB—Continued

40 CFR citation	Requirement	Applies to subpart BB	Comment
63.10(c)(6)		No	Subpart BB does not require CMS performance specifications.
63.10(c)(7) and (8)		Yes.	
63.10(c)(9)		No	[Reserved].
63.10(c)(10) through (13)		Yes.	
63.10(c)(14)		No	Subpart BB does not require a CMS quality control program.
63.10(c)(15)		Yes.	
63.10(d)(1)	General Reporting Requirements	Yes.	
63.10(d)(2)	Performance Test Results	Yes.	
63.10(d)(3)	Opacity or VE Observations	No	Subpart BB does not include VE/opacity standards.
63.10(d)(4) and (5)	Progress Reports/Startup, Shutdown, and Malfunction Reports.	Yes.	
63.10(e)(1) and (2)	Additional CMS Reports	No	Subpart BB does not require CEMS or CMS performance evaluations.
63.10(e)(3)	Excess Emissions/CMS Performance Reports	Yes	§ 63.626(c)(2) includes additional requirements. A CMS performance report is not required.
63.10(e)(4)	COMS Data Reports	No	Subpart BB does not require COMS.
63.10(f)	Recordkeeping/Reporting Waiver	Yes.	
63.11(a)	Control Device Requirements Applicability	Yes.	
63.11(b)	Flares	No	Flares not applicable.
63.12	State Authority and Delegations	Yes	Authority for approval of site-specific test plans for GTSP storage buildings is retained (see § 63.628(a)).
63.13	Addresses	Yes.	
63.14	Incorporation by Reference	Yes.	
63.15	Information Availability/Confidentiality	Yes.	

[FR Doc. 99–10412 Filed 6–9–99; 8:45 am]
BILLING CODE 6560–50–P

§ 21.7137 Rates of payment of basic educational assistance for individuals with remaining entitlement under 38 U.S.C. ch. 34.

(a) *Minimum rates.* (1) Except as elsewhere provided in this section, the monthly rate of basic educational assistance for training that occurs after September 30, 1998, and before October 1, 1999, is the rate stated in the following table:

Training	Monthly rate			
	No dependents	One dependent	Two dependents	Additional for each additional dependent
Full time	$716.00	$752.00	$783.00	$16.00
¾ time	537.50	564.00	587.50	12.00
½ time	358.00	376.00	391.50	8.50
Less than ½ but more than ¼ time	358.00	.....	.....	.....
¼ time or less	179.00	.....	.....	.....

(Authority: 38 U.S.C. 3015(e), (f), and (g))

(2) For veterans pursuing apprenticeship or other on-job training, the monthly rate of basic educational assistance for training that occurs after September 30, 1998, and before October 1, 1999, is the rate stated in the following table:

Training	Monthly rate			
	No dependents	One dependent	Two dependents	Additional for each additional dependent
1st six months of pursuit of program	$498.75	$511.13	$522.00	$5.25
2nd six months of pursuit of program	346.78	356.13	363.83	3.85
3rd six months of pursuit of program	208.60	214.73	219.45	2.45
Remaining pursuit of program	196.70	202.48	207.73	2.45

(Authority: 38 U.S.C. 3015(e), (f), (g))

(3) The monthly rate payable to a veteran who is pursuing a cooperative course is the rate stated in the following table:

Training period	Monthly rate			
	No dependents	One dependent	Two dependents	Additional for each additional dependent
Oct. 1, 1997–Sept. 30, 1998	$627.85	$663.85	$694.85	$16.00
On or after Oct. 1, 1998, and before Oct. 1, 1999	716.00	752.00	783.00	16.00

(Authority: 38 U.S.C. 3015)

* * * * *

[FR Doc. 99–14916 Filed 6–11–99; 8:45 am]

BILLING CODE 8320–01–P

ENVIRONMENTAL PROTECTION AGENCY

40 CFR Parts 9 and 63

[FRL–6345–3]

RIN 2060–AE75

National Emission Standards for Hazardous Air Pollutants for Source Categories; Wool Fiberglass Manufacturing

AGENCY: Environmental Protection Agency (EPA).

ACTION: Final rule.

SUMMARY: This action promulgates national emission standards for hazardous air pollutants (NESHAP) for new and existing sources in wool fiberglass manufacturing facilities. This action also adds Method 316 and Method 318 for the measurement of formaldehyde from wool fiberglass manufacturing lines to appendix A of part 63.

The hazardous air pollutants (HAPs) emitted by the facilities covered by this rule include compounds of three metals (arsenic, chromium, lead) and three organic HAPs (formaldehyde, phenol, and methanol). Exposure to these HAPs can cause reversible or irreversible health effects including carcinogenic, respiratory, nervous system, developmental, reproductive, and/or dermal health effects. The EPA estimates the final rule will reduce nationwide emissions of HAPs from these facilities by 530 megagrams per year (Mg/yr) (580 tons per year [ton/yr]), an approximate 30 percent reduction from the current level of emissions. In addition, the rule will achieve an estimated 760 Mg/yr (840 ton/yr) of particulate matter (PM) reductions.

These standards implement section 112(d) of the Clean Air Act (CAA) and are based on the Administrator's determination that wool fiberglass manufacturing facilities may reasonably be anticipated to emit several of the 188 HAPs listed in section 112(b) of the CAA from the various process operations found within the industry. The final rule will provide protection to the public by requiring all wool

fiberglass plants that are major sources to meet emission standards reflecting the application of the maximum achievable control technology (MACT).

In compliance with the Paperwork Reduction Act (PRA), this action also amends the table that lists the Office of Management and Budget (OMB) control numbers issued under the PRA for this rule.

A supplement to the proposed rule was proposed in the **Federal Register** on February 12, 1999 (64 FR 7149). The EPA will give careful consideration to all comments on the supplemental proposal and will amend this final rule in a future action as appropriate.

EFFECTIVE DATE: June 14, 1999. See the **SUPPLEMENTARY INFORMATION** section concerning judicial review.

ADDRESSES: *Docket.* The docket for this rulemaking containing the information considered by the EPA in development of the final rule is Docket No. A-95-24. This docket is available for public inspection between 8 a.m. and 5:30 p.m., Monday through Friday except for Federal holidays, at the following address: U.S. Environmental Protection Agency, Air and Radiation Docket and Information Center (6102), 401 M Street SW., Washington, DC 20460; telephone: (202) 260-7548. The docket is located at the above address in Room M-1500, Waterside Mall (ground floor). A reasonable fee may be charged for copying docket materials.

FOR FURTHER INFORMATION CONTACT: Ms. Mary Johnson, at (919) 541-5025, Minerals and Inorganic Chemicals Group, Emission Standards Division (MD-13), U.S. Environmental Protection Agency, Research Triangle Park, North Carolina 27711. For information regarding Methods 316 and 318, contact Ms. Rima N. Dishakjian, Emissions, Monitoring, and Analysis Division, at (919) 541-0443.

SUPPLEMENTARY INFORMATION:

Regulated Entities. Entities potentially regulated by the final rule are facilities that manufacture wool fiberglass. Regulated categories and entities are shown in Table 1.

TABLE 1.—REGULATED CATEGORIES AND ENTITIES

Entity category	Description
Industrial	Wool Fiberglass Manufacturing Plants (SIC 3296).
Federal Government: Not Affected.	
State/Local/Tribal Government: Not Affected.	

This table is not intended to be exhaustive, but rather provides a guide for readers regarding entities likely to be regulated by this action. This table lists the types of entities that the EPA is now aware could potentially be regulated by this action. To determine whether your facility is regulated by this action, you should carefully examine the applicability criteria in § 63.1380 of the final rule. If you have any questions regarding the applicability of this action to a particular entity, consult the appropriate regional representative:

Region I—Janet Bowen, Office of Ecosystem Protection, U.S. EPA, Region I, CAP, JFK Federal Building, Boston, MA 02203, (617) 565-3595.

Region II—Kenneth Eng, Air Compliance Branch Chief, U.S. EPA, Region II, 290 Broadway, New York, NY 10007-1866, (212) 637-4000.

Region III—Bernard Turlinski, Air Enforcement Branch Chief, U.S. EPA, Region III, 3AT10, 841 Chestnut Building, Philadelphia, PA 19107, (215) 566-2110.

Region IV—Lee Page, Air Enforcement Branch, U.S. EPA, Region IV, Atlanta Federal Center, 61 Forsyth Street, Atlanta, GA 30303-3104, (404) 562-9131.

Region V—George T. Czerniak, Jr., Air Enforcement Branch Chief, U.S. EPA, Region V, 5AE-26, 77 West Jackson Street, Chicago, IL 60604, (312) 353-2088.

Region VI—John R. Hepola, Air Enforcement Branch Chief, U.S. EPA, Region VI, 1445 Ross Avenue, Suite 1200, Dallas, TX 75202-2733, (214) 665-7220.

Region VII—Donald Toensing, Chief, Air Permitting and Compliance Branch, U.S. EPA, Region VII, 726 Minnesota Avenue, Kansas City, KS 66101, (913) 551-7446.

Region VIII—Douglas M. Skie, Air and Technical Operations Branch Chief, U.S. EPA, Region VIII, 999 18th Street, Suite 500, Denver, CO 80202-2466, (303) 312-6432.

Region IX—Barbara Gross, Air Compliance Branch Chief, U.S. EPA, Region IX, 75 Hawthorne Street, San Francisco, CA 94105, (415) 744-1138.

Region X—Anita Frankel, Air and Radiation Branch Chief, U.S. EPA, Region X, AT-092, 1200 Sixth Avenue, Seattle, WA 98101, (206) 553-1757.

Judicial Review. The NESHAP for wool fiberglass manufacturing plants was proposed on March 31, 1997 (62 FR 15228); this action announces the EPA's final decisions on the rule. Under section 307(b)(1) of the CAA, judicial review of the NESHAP is available only by filing a petition for review in the U.S. Court of Appeals for the District of Columbia Circuit within 60 days of today's publication of this final rule. Under section 307(b)(2) of the CAA, the requirements that are the subject of today's notice may not be challenged later in civil or criminal proceedings brought by the EPA to enforce these requirements.

Technology Transfer Network. In addition to being available in the docket, an electronic copy of today's document, which includes the regulatory text, is available through the Technology Transfer Network (TTN) at the Unified Air Toxics Website (UATW). Following promulgation, a copy of the rule will be posted at the TTN's policy and guidance page for newly proposed or promulgated rules (http://www.epa.gov/ttn/oarpg/t3pfpr.html). The TTN facilitates the exchange of information in various areas of air pollution control, such as technology. If more information on the TTN is needed, call the TTN HELP line at (919) 541-5384.

Outline. The following outline is provided to aid in reading this preamble to the final rule.

I. Background
  A. Background and Purpose of Standards
  B. Technical Basis of Regulation
  C. Stakeholder and Public Participation
II. Summary of Final Rule
  A. Applicability
  B. Emission Standards
  C. Compliance and Performance Test Provisions
  D. Monitoring and Operating Requirements
  E. Notification, Reporting, and Recordkeeping Requirements
III. Summary of Changes Since Proposal
  A. Definitions
  B. Performance Test Provisions
  C. Monitoring Requirements
  D. Notification, Reporting, and Recordkeeping Requirements
  E. Display of OMB Control Numbers
IV. Summary of Impacts
V. Summary of Responses to Major Comments
  A. Selection of Pollutants

B. Selection of Emission Limits
C. Monitoring
D. Performance Tests
VI. Administrative Requirements
A. Docket
B. Executive Order 12866—Regulatory Planning and Review
C. Executive Order 12875—Enhancing the Intergovernmental Partnership
D. Unfunded Mandates Reform Act
E. Regulatory Flexibility
F. Submission to Congress and the General Accounting Office
G. Paperwork Reduction Act
H. Pollution Prevention Act
I. National Technology Transfer and Advancement Act
J. Executive Order 13045—Protection of Children from Environmental Health Risks and Safety Risks
K. Executive Order 13084—Consultation and Coordination With Indian Tribal Governments

I. Background

A. Background and Purpose of Standards

Section 112 of the CAA requires that the EPA promulgate regulations for the control of HAP emissions from both new and existing major sources. The statute requires the regulations to reflect the maximum degree of reduction in emissions of HAPs that is achievable, taking into consideration the cost of achieving the emission reduction, any nonair quality health and environmental impacts, and energy requirements. This level of control is commonly referred to as MACT.

Section 112 of the CAA requires the EPA to establish national standards to reduce air emissions from major sources and certain area sources that emit one or more HAPs. Section 112(b) contains a list of HAPs to be regulated by NESHAP. Section 112(c) directs the Agency to use this pollutant list to develop and publish a list of source categories for which NESHAP will be developed and a schedule for development of these NESHAP. The Agency must list all known source categories and subcategories of "major sources" that emit one or more of the listed HAPs. A major source is defined in section 112(a) as any stationary source or group of stationary sources located within a contiguous area and under common control that emits or has the potential to emit in the aggregate, considering controls, 10 tons per year or more of any one HAP or 25 tons per year or more of any combination of HAPs. This list of source categories was published in the **Federal Register** on July 16, 1992 (57 FR 31576) and includes wool fiberglass manufacturing.

The control of HAPs is achieved through the promulgation of technology-based emission standards under section 112 for categories of sources that emit HAPs. Emission reductions may be accomplished through the application of measures, processes, methods, systems, or techniques including, but not limited to: (1) Reducing the volume of, or eliminating emissions of, such pollutants through process changes, substitution of materials, or other modifications; (2) enclosing systems or processes to eliminate emissions; (3) collecting, capturing, or treating such pollutants when released from a process, stack, storage or fugitive emissions point; (4) design, equipment, work practice, or operational standards (including requirements for operator training or certification) as provided in subsection (h); or (5) a combination of the above. (See section 112(d)(2).) The EPA may promulgate more stringent regulations to address residual risk that remains after the imposition of controls. (See section 112(f)(2).) Pursuant to section 112(d) of the CAA, on March 31, 1997, the EPA proposed NESHAP for new and existing major sources in the wool fiberglass manufacturing source category (62 FR 15228).

B. Technical Basis of Regulation

Since proposal, no changes have been made in the emission standards or the MACT floor that is the basis for the emission standards. The rationale for the selection of the standards, including their technical basis, is discussed in the preamble to the proposed rule (62 FR 15228, March 31, 1997).

C. Stakeholder and Public Participation

Various stakeholders were involved in the development of these standards. Individual wool fiberglass companies and the industry association (the North American Insulation Manufacturers Association) were consulted throughout the development of these standards. Representatives from State and Regional enforcement agencies, as well as representatives from other offices within the EPA, participated in the regulatory development process by reviewing and commenting on the standards during development.

The NESHAP for wool fiberglass manufacturing (40 CFR part 63, subpart NNN) was proposed in the **Federal Register** on March 31, 1997 (62 FR 15228). The public comment period ended on May 30, 1997. Industry representatives, regulatory authorities, and environmental groups had the opportunity to comment on the proposed standard and to provide additional information during the public comment period. Although the Agency offered at proposal the opportunity for oral presentation of data, views, or arguments concerning the proposed rule, no one requested a hearing and a hearing was not held. The EPA received nine letters containing comments on the proposed standard from various groups including associations representing industry, regulatory agencies, and air pollution control equipment vendors, as well as from State regulatory agencies and a private citizen. This final rule reflects the EPA's full consideration of the comments. The major public comments, along with the EPA's responses to the comments on the proposed rule, are summarized in this preamble. A more detailed discussion of public comments and EPA's responses is contained in the docket (Docket No. A-95-24; Item V-C-2).

II. Summary of Final Rule

A. Applicability

As stated in § 63.1380, the final NESHAP applies to each of the following existing and newly constructed sources located at a wool fiberglass manufacturing facility: All glass-melting furnaces, rotary spin (RS) manufacturing lines that produce bonded building insulation, and flame attenuation (FA) manufacturing lines producing bonded pipe insulation. The rule also applies to new FA manufacturing lines producing bonded heavy-density products. RS and FA manufacturing lines that produce nonbonded products, where no binder is applied, are not subject to the standards. A facility emitting less than 10 tons per year of any HAP or less than 25 tons per year of any combination of HAPs is an area source and is not subject to this NESHAP. Facilities that manufacture mineral wool from rock or slag are not subject to this rule but are subject to a separate NESHAP for mineral wool production. (See 62 FR 25370 (May 8, 1997), notice of proposed rulemaking.)

B. Emission Standards

No changes were made to the emission limits as proposed. The emission standards are contained in the final rule in § 63.1382.

C. Compliance and Performance Test Provisions

As stated in § 63.1387, new sources must demonstrate compliance with the standard at startup. Existing sources must comply within 3 years of the effective date of the final rule but may request an extension for a fourth year pursuant to the regulatory authority under section 112(i)(3)(B) of the CAA.

As required by § 63.1384, owners or operators must, by conducting a performance test, demonstrate initial compliance with the PM emission limits for affected glass-melting furnaces and the formaldehyde emission limits for affected RS and FA manufacturing lines. During the initial performance test, the owner or operator must monitor and record the glass pull rate of the furnace and the glass pull rate of each manufacturing line during each of the three test runs and determine the emission rate for each run. A determination of compliance will be based on the average of the three individual test runs.

In § 63.1384, the owner or operator is required to monitor and record all parameter values at least every 15 minutes during the performance test and to calculate an average using all of the parameter measurements. However, the standard requires that the appropriate parameters for incinerators and scrubbers be continuously monitored and recorded.

The owner or operator of an electrostatic precipitator (ESP) that is used to control PM emissions from a glass-melting furnace must monitor and record the ESP operating parameter(s) and establish the parameter limit(s) that will be used to monitor the ESP performance following the performance test. Where a cold top electric furnace is operated without the use of an add-on PM control device, the owner or operator must monitor and record the air temperature above the surface of the glass melt to ensure that the maximum temperature does not exceed 120 °C (250 °F) at a location 46 to 61 centimeters (18 to 24 inches) above the molten glass surface. The owner or operator of a glass-melting furnace that is not equipped with an add-on PM control device and that is not a cold top electric furnace must monitor and record the furnace operating parameter(s) and establish the parameter limit(s) that will be used to monitor the furnace performance following the performance test.

To determine compliance with the emission limits for new and existing RS and FA manufacturing lines subject to the standard, the owner or operator must measure formaldehyde emissions to the atmosphere from forming and, when present, curing and cooling processes, and sum the emissions from these processes. The owner or operator must, according to § 63.1384, conduct the initial performance test for each new or existing RS manufacturing line while making the building insulation product with the highest loss on ignition (LOI) expected to be produced on that manufacturing line. Initial performance tests are required for new FA manufacturing lines producing heavy-density products and on new and existing FA manufacturing lines producing pipe products. Performance tests for each affected FA manufacturing line must be conducted while producing the highest LOI heavy-density or pipe product, as appropriate.

During performance tests on affected RS and FA manufacturing lines, the owner or operator must record, as specified in § 63.1384, the LOI and density of each product for each line tested, the free formaldehyde content of the resin(s) used during the tests, and the binder formulation(s) used during the tests. The performance tests must be conducted using the resin having the highest free formaldehyde content that the owner or operator expects to use on that line. If the owner or operator uses process modifications to comply with the emission limits for affected RS or FA manufacturing lines, the owner or operator must monitor and record the process parameter(s) and establish the process parameter limit(s) that will be used to monitor the performance of the process modifications following the performance tests. If a wet scrubbing control device is used to control formaldehyde emissions from affected RS or FA manufacturing lines, the owner or operator must continuously monitor and record the scrubber parameters and establish the operating limits of the pressure drop across each scrubber, the scrubbing liquid flow rate to each scrubber, and the identity and feed rate of any chemical additive. Where a thermal incinerator is used to comply with the emission limit for formaldehyde, the owner or operator is required to continuously measure and record the incinerator operating temperature during the performance test and determine the average temperature during each 1-hour test run. The average of the three test runs will be used to monitor compliance.

Under § 63.1384, the owner or operator may seek to broaden or extend the operating limits established during the performance tests for affected control devices and processes by conducting additional performance tests to demonstrate compliance at the new limits.

Under § 63.1384, the owner or operator of RS and FA manufacturing lines may conduct short-term experimental production runs without conducting additional performance tests. The final rule requires the owner or operator to notify the Administrator at least 15 days in advance of an experimental production run. The experimental runs must not exceed 1 week in duration unless a longer period is approved by the Administrator. The owner or operator may conduct the experimental production run unless notified of a decision to disapprove the run or unless notified of a request for additional information prior to the date of the run.

D. Monitoring and Operating Requirements

Owners or operators of affected sources must submit, under § 63.1383, an operations, maintenance, and monitoring plan as part of their application for a part 70 permit. The plan must include procedures for the proper operation and maintenance of processes and control devices used to comply with the emission limits as well as the corrective actions to be taken when control devices or process parameters deviate from allowable levels established during performance testing. The plan also must identify the procedures for the proper operation and maintenance of monitoring devices including periodic calibration and verification of accuracy.

Section 63.1383 requires that each baghouse used on a glass-melting furnace be equipped with a bag leak detection system having an audible alarm that automatically sounds when an increase in particulate emissions above a predetermined level is detected. Such a device monitors the performance of the baghouse, detects an increase in PM emissions, and indicates that maintenance of the baghouse is needed. The operating limits of § 63.1382 require the owner or operator to initiate corrective action within 1 hour of the alarm sounding according to the operations, maintenance, and monitoring plan. If the alarm is activated for more than 5 percent of the total operating time during the 6-month block reporting period, the owner or operator must develop and implement a Quality Improvement Plan (QIP). The QIP must be consistent with the compliance assurance monitoring rule, 40 CFR part 64 subpart D (62 FR 54900, October 22, 1997).

The monitoring requirements of § 63.1383 require the owner or operator of each ESP used to control an affected glass-melting furnace to monitor and record the established ESP parameter(s) according to the procedures in the operations, maintenance, and monitoring plan. The final rule requires the owner or operator to initiate corrective action within 1 hour, according to the procedures in the facility's operations, maintenance, and monitoring plan, if the monitored

parameter(s) deviates from the limit(s) established during performance tests. If the monitored parameter(s) is outside the established limit(s) for more than 5 percent of the total operating time in a 6-month block reporting period, the owner or operator must develop and implement a QIP. The owner or operator must operate the ESP such that the monitored parameter(s) does not deviate from the established limit(s) for more than 10 percent of the total operating time in a 6-month block reporting period.

Under § 63.1383 of the final rule, the owner or operator of a cold top electric furnace, who complies with the PM emission limit without the use of an air pollution control device, must monitor and record the air temperature above the glass melt to monitor when the temperature exceeds the maximum temperature of 120 °C (250 °F) measured at a location 46 to 61 centimeters (18 to 24 inches) above the molten glass surface. The owner or operator must initiate corrective action within 1 hour according to § 63.1382 if the average air temperature exceeds the maximum. If the air temperature as measured above the molten glass exceeds the maximum for more than 5 percent of the total operating time in a 6-month block reporting period, the owner or operator is required to develop and implement a QIP. The rule also requires that the owner or operator operate the cold top electric furnace so that the maximum temperature is not exceeded for more than 10 percent of the total operating time in a 6-month block reporting period.

The final rule (§ 63.1383) requires the owner or operator of a glass-melting furnace, which is not equipped with an air pollution control device for PM control and which is not a cold top electric furnace, to monitor the glass-melting furnace according to the procedures in the operation, maintenance, and monitoring plan. The plan must include the furnace operating parameter(s) and parameter limit(s) to be monitored to identify any operational problems, a monitoring schedule, and recordkeeping procedures. As required by § 63.1382, the owner or operator must initiate corrective action within 1 hour if the monitored operating parameter(s) deviates from the limits established during the initial performance. The rule also requires the owner or operator to develop and implement a QIP if the monitored furnace operating parameter value(s) is outside the established limit(s) for more than 5 percent of the total operating time in a 6-month block reporting period. The owner or operator must operate the affected glass-melting furnace so that the monitored furnace parameter value(s) is not outside the established limit(s) for more than 10 percent of the total operating time in a 6-month block reporting period.

The final rule, under § 63.1383, requires the owner or operator to monitor and record the glass pull rate on all existing and new glass-melting furnaces. If the monitored pull rate exceeds by more than 20 percent the average glass pull rate measured during the performance test, the owner or operator must initiate corrective action within 1 hour as required by § 63.1383. If the glass pull rate exceeds (by more than 20 percent) the average established during the performance test for more than 5 percent of the total operating time in a 6-month block reporting period, the owner or operator must develop and implement a QIP. The final rule requires the owner or operator to operate the glass-melting furnace so that the glass pull rate does not exceed (by more than 20 percent) the average established during the performance test for more than 10 percent of the total operating time in a 6-month block reporting period.

If an incinerator is used to control formaldehyde emissions, § 63.1383 requires that the owner or operator continuously monitor and record the operating temperature. Following the initial performance test, the operating limits of § 63.1382 require that the owner or operator maintain the temperature so that the temperature, averaged over any 3-hour block period, does not fall below the average temperature established during the initial performance test. As required in § 63.1383, the owner or operator must also annually inspect each incinerator to ensure its proper operation and maintenance. The rule specifies that, at a minimum, the following be included in the inspection:

(1) Burners, pilot assemblies, and pilot sensing devices;
(2) Adjustment of combustion air;
(3) Internal structures, such as baffles;
(4) Dampers, fans, and blowers;
(5) Proper sealing;
(6) Motors;
(7) Refractory lining; and (8) Incinerator shell.

Section 63.1383 of the final rule requires that the owner or operator, who uses a wet scrubbing control device to control formaldehyde emissions from affected RS or FA manufacturing lines, continuously monitor and record the gas pressure drop across each scrubber, the scrubbing liquid flow rate to each scrubber, and the identity and feed rate of any chemical added to the scrubbing liquid. As required in § 63.1382, the owner or operator must initiate corrective action according to the procedures in the facility's operations, maintenance, and monitoring plan within 1 hour if the average scrubber parameter for any 3-hour block period deviates from the limit(s) established during the initial performance test. If any scrubber parameter is outside an established limit(s) for more than 5 percent of the total operating time in a 6-month block reporting period, the owner or operator must develop and implement a QIP. The owner or operator must operate each affected scrubber such that none of the monitored parameters deviate from the established limits for more than 10 percent of the total operating time in a 6-month block reporting period.

As required in § 63.1383, the owner or operator who uses process modifications to comply with the emission limits for RS or FA manufacturing lines must establish a correlation between the parameter(s) to be monitored and formaldehyde emissions. The owner or operator must also include as part of the operations, maintenance, and monitoring plan information on how the process will be operated and maintained, the process parameter(s) to be monitored including the correlation between the parameter(s) and formaldehyde emissions, a monitoring schedule, and recordkeeping procedures to document proper operation of the process modifications. Section 63.1382 of the final rule requires the owner or operator to initiate corrective action within 1 hour of a deviation of a process parameter from the established limits and to develop and implement a QIP if the process parameter(s) is outside the established limit(s) for more than 5 percent of the total operating time in a 6-month block reporting period. The owner or operator must operate the process so that the process modification parameters do not deviate from the established limits for more than 10 percent of the total operating time in a 6-month block reporting period.

Under § 63.1383 of the final rule, the owner or operator must monitor and record the free formaldehyde content of each resin shipment, the formulation of each batch of binder used, and, every 8 hours, product LOI and product density. Following the performance test, § 63.1382 requires that the owner or operator must formulate binders using resins having a free formaldehyde content that does not exceed the free formaldehyde content range contained in the resin specification established and used during the performance test.

The final rule also requires that the owner or operator use a binder formulation that does not vary from the specification and operating range established during the performance test. For purposes of this rule, the addition of urea and lignin to the binder formulation is not considered changes in the formulation.

Failure to operate all affected processes and control devices according to the operating limits of § 63.1382, for example, failure to initiate corrective actions or failure to develop and implement a QIP, is considered a violation of the operating requirements.

Under § 63.1383 of this rule, the owner or operator may modify any of the control device or process parameter limits established during the initial performance tests provided that the owner or operator conducts additional emission testing to verify compliance at the new parameter levels.

E. Notification, Reporting, and Recordkeeping Requirements

Notification, reporting, and recordkeeping requirements for MACT standards are included in the NESHAP general provisions (40 CFR part 63, subpart A). The general provisions require: (1) Initial notification(s) of applicability, notification of performance test, and notification of compliance status; (2) a report of performance test results; (3) a startup, shutdown, and malfunction plan with semiannual reports of any reportable events; and (4) semiannual reports of deviations from established parameters. When deviations in operating parameters established during performance testing are reported, the owner or operator must report quarterly until a request to return to semiannual reporting is approved by the Administrator.

In addition to the requirements of the general provisions, § 63.1386 of the final rule specifies additional records to be kept by the owner or operator. The final rule requires the owner or operator to maintain records of the following, as applicable:

(1) Bag leak detection system alarms, including the date and time of the alarm, when corrective actions were initiated, the cause of the alarm, an explanation of the corrective actions taken, and when the cause of the alarm was corrected;

(2) ESP parameter value(s) used to monitor ESP performance, including any period when the value(s) deviates from the established limit(s), the date and time of the deviation, when corrective actions were initiated, the cause of the deviation, an explanation of the corrective actions taken, and when the cause of the deviation was corrected;

(3) Air temperature above the molten glass in an uncontrolled cold top electric furnace, including any period when the temperature exceeds 120 °C (250 °F) at a location 46 to 61 centimeters (18 to 24 inches) above the molten glass surface, the date and time of the exceedance, when corrective actions were initiated, the cause of the exceedance, an explanation of the corrective actions taken, and when the cause of the exceedance was corrected;

(4) Uncontrolled glass-melting furnace (that is not a cold top electric furnace) parameter value(s) used to monitor furnace performance, including any period when the value(s) exceeds the established limit(s), the date and time of the exceedance, when corrective actions were initiated, the cause of the exceedance, an explanation of the corrective actions taken, and when the cause of the exceedance was corrected;

(5) The LOI and product density for each bonded product manufactured on a RS or FA manufacturing line, the free formaldehyde content of each resin shipment received and used in binder formulation, and the binder formulation of each batch;

(6) Process parameter level(s) for RS and FA manufacturing lines that use process modifications to comply with the emission standards, including any period when the parameter level(s) deviates from the established limit(s), the date and time of the deviation, when corrective actions were initiated, the cause of the deviation, an explanation of the corrective actions taken, and when the cause of the deviation was corrected;

(7) Scrubber pressure drop, scrubbing liquid flow rate, and any chemical additive (including chemical feed rate to the scrubber), including any period when a parameter level(s) deviates from the established limit(s), the date and time of the deviation, when corrective actions were initiated, the cause of the deviation, an explanation of the corrective actions taken, and when the cause of the deviation was corrected;

(8) Incinerator operating temperature and results of periodic inspection of incinerator components, including any period when the temperature falls below the established average or the inspection identifies problems with the incinerator, the date and time of the problem, when corrective actions were initiated, the cause of the problem, an explanation of the corrective actions taken, and when the cause of the problem was corrected;

(9) Glass pull rate, including any period when the pull rate exceeds the average pull rate established during the performance test by more than 20 percent, the date and time of the exceedance, when corrective actions were initiated, the cause of the exceedance, an explanation of the corrective actions taken, and when the cause of the exceedance was corrected.

The NESHAP general provisions (40 CFR part 63, subpart A) require that records be maintained for at least 5 years from the date of each record. The owner or operator must retain the records onsite for at least 2 years but may retain the records offsite the remaining 3 years. The files may be retained on microfilm, on microfiche, on a computer, on computer disks, or on magnetic tape disks. Reports may be made on paper or on a labeled computer disk using commonly available and EPA-compatible computer software.

III. Summary of Changes Since Proposal

Changes have been incorporated into the final NESHAP for wool fiberglass manufacturing plants in response to comments on the proposed rule. The principal changes made since proposal are summarized below. Additional discussion of changes and the rationale for these changes is presented in section V of this preamble.

A. Definitions

In response to public comments, minor clarifying changes were made in § 63.1381 to the definitions of *building insulation, glass pull rate, manufacturing line,* and *wool fiberglass.* For purposes of clarifying the applicability of the rule and because of changes in the monitoring requirements for certain glass-melting furnaces, definitions were added for *cold top electric furnace, new source, and wool fiberglass manufacturing facility.*

B. Performance Test Provisions

In response to public comments, the EPA revised the proposed provision that would allow the owner or operator of RS and FA manufacturing lines subject to the NESHAP to conduct short-term experimental production runs without conducting additional performance tests. Section 63.1384 of the final rule requires that the owner or operator notify the Administrator at least 15 days in advance of an experimental production run. The duration of the test run may not exceed 1 week unless the Administrator approves a longer period. The Administrator may disapprove the experimental production run or request additional information but such disapproval or request for additional information must be made prior to the date of the experimental production run.

Other revisions clarify the proposed requirements for performance testing by specifying the frequency for monitoring and recording process and/or control device parameters during performance tests. The requirements to establish process and control device parameter limits for compliance monitoring are more appropriately a part of the requirements for performance testing and, thus, were moved from the monitoring requirements section to the performance test requirements section. The requirement for RS manufacturing lines to use the most frequently manufactured building insulation when conducting performance tests was deleted from the proposed definition of *building insulation*. A requirement was added to the performance testing provisions (§ 63.1384) for affected RS and FA manufacturing lines to conduct performance test while manufacturing the product having the highest LOI expected to be produced on the affected line. Because a glass-melting furnace may supply more than one manufacturing line, the final rule clarifies that, in addition to the furnace glass pull rate, the glass pull rate for the manufacturing line must also be monitored during the performance test.

Methods for measuring formaldehyde emissions from RS and FA manufacturing lines were contained in the proposed rule. Because the Agency now has an FTIR method (Method 320) that can be used at other sources, a self-validating method is no longer necessary. Method 318 was modified by removing the spiking procedures, which simplifies use of the method. The EPA has also clarified that this method is only applicable at mineral wool and wool fiberglass manufacturing sources. In response to comments, the final rule also contains editorial and clarifying changes in Method 318.

C. Monitoring Requirements

The monitoring requirements section in the proposed rule specified, for each control device and process, the parameter that was to be monitored. In the final rule, the section on monitoring requirements was revised. In the final rule, the monitoring requirements section (§ 63.1383) specifies that process or control device parameters must be monitored as well as monitoring frequency. The final rule recognizes that a deviation of a process or control device parameter from a level established during a performance test is more appropriately a violation of an operating limit rather than a violation of an emission limit. The operating limits are part of the standard and are specified in § 63.1382.

The proposed rule stated that the owner or operator of each affected source had to submit an operations, maintenance, and monitoring plan containing information on the proper operation and maintenance of process modifications and control devices, the parameter(s) to be monitored that would be used to determine compliance, and corrective actions to be taken when monitoring indicated a deviation from the limit(s) established during the performance tests. The final rule (§ 63.1383) clarifies that the operations, maintenance, and monitoring plan must also include procedures for the proper operation and maintenance of all monitoring devices. As proposed, each baghouse used on a glass-melting furnace must be equipped with a bag leak detection system having an audible alarm that automatically sounds when an increase in particulate emissions above a predetermined level is detected. In response to comments and for consistency with other regulations, § 63.1383 of the final standard requires that the monitor be capable of detecting PM emissions at concentrations of 10 milligrams per actual cubic meter (0.0044 grains per actual cubic foot). Also, because guidelines for the operation and maintenance of triboelectric bag leak detection systems have become available since proposal, these guidelines are specifically cited in the rule. The EPA's "Fabric Filter Bag Leak Detection Guidance" (EPA–454/R–98–015, September 1997) is available on the TTN under Emission Measurement Center (EMC), Continuous Emission Monitoring. To maintain consistency with bag leak detection system requirements in other regulations and to allow owners and operators flexibility to make necessary bag leak detection system adjustments, the final rule specifies that following initial adjustment, the owner or operator may adjust the range, averaging period, alarm set points, or alarm delay time as specified in the approved operations, maintenance, and monitoring plan. The final rule further specifies that in no event may the range be increased by more than 100 percent or decreased by more than 50 percent over a 365 day period unless a responsible official, as defined in § 63.2 of the general provisions in subpart A of 40 CFR part 63, certifies in writing to the Administrator that the fabric filter has been inspected and found to be in good operating condition. The final rule clarifies that the alarm must be located in an area where appropriate plant personnel will be able to hear it and that in response to the sounding of an alarm, the owner or operator must complete corrective actions in a timely manner. The final rule also specifies some example corrective actions for bag leak detection system alarms that may be included in the operations, maintenance, and monitoring plan.

Under the proposed rule, the owner or operator would continuously monitor and record the glass pull rate on all existing and new glass-melting furnaces. As a result of comments, § 63.1383 of the final rule clarifies what is meant by continuous monitoring of the glass pull rate. Similar revisions were made to the monitoring requirements for other control devices and process parameters to clarify the requirements for monitoring frequency. Revisions were made to the proposed rule to clarify when corrective actions are required in response to monitored levels that are outside the limits established during performance tests.

Under the proposed NESHAP, the owner or operator would be in violation of the standard if the binder formulation deviated from the formulation specifications used during the performance test. In response to comments, the final rule states that the addition of urea and lignin to the binder formulation does not constitute a change in binder formulation, and the operating limits in § 63.1382 for the binder formulation and the use of resins were clarified to incorporate this change.

In response to comments, clarifying changes were made throughout the monitoring and operating requirements to indicate that because some control device or process parameters used for monitoring purposes may be established as minimum and/or maximum values, it is not always appropriate to have requirements that are in terms of exceeding control device or process parameter values. Other minor editorial changes were made throughout the monitoring and operating requirements to improve clarity.

Consistent with the general provision requirements to operate and maintain air pollution equipment in a manner consistent with good air pollution control practices, the final rule contains specific provisions for the annual inspection of incinerators to ensure that they maintain their performance in reducing formaldehyde emissions.

The proposed rule allowed the owner or operator of a glass-melting furnace that complies with the PM emission limit without the use of add-on control devices to determine the appropriate process parameter or control device parameter to monitor to determine compliance. Section 63.1383 of the final

rule specifies that the owner or operator of a cold top electric furnace is required to monitor the air temperature above the molten glass surface. Section 63.1382 requires the owner or operator of a cold top electric furnace to operate the furnace such that the air temperature above the molten glass does not exceed 120 °C (250 °F) more than 10 percent of total operating time in a 6-month block reporting period.

D. Notification, Reporting, and Recordkeeping Requirements

The proposed rule specified additional records to be kept by the owner or operator in addition to the requirements of the general provisions. Editorial and clarifying revisions were made to the final notification, reporting, and recordkeeping requirements (§ 63.1386). The final rule specifies that the time that corrective action is initiated, as well as when the cause of the alarm, deviation, or exceedance was corrected, must be recorded. In addition, product density and glass pull rate were added to the list for which records are required to be kept, consistent with the monitoring provisions in § 63.1383. Other revisions were made to the recordkeeping provisions consistent with changes made in the monitoring and operating provisions.

E. Display of OMB Control Numbers

The EPA is today amending the table of currently approved information collection request (ICR) control numbers issued by OMB for various regulations. Today's amendment updates the table to list the information requirements contained in this final rule. The EPA will continue to present OMB control numbers in a consolidated table format to be codified in 40 CFR part 9 of the Agency's regulations, and in each CFR volume containing EPA regulations. The table lists the section numbers with reporting and recordkeeping requirements, and the current OMB control numbers. This listing of the OMB control numbers and its subsequent codification in the CFR satisfy the requirements of the Paperwork Reduction Act (PRA) (44 U.S.C. 3501 *et seq.*) and OMB's implementing regulations at 5 CFR part 1320.

The ICR was previously subject to public notice and comment prior to OMB approval. As a result, EPA finds there is "good cause" under section 553(b)(B) of the Administrative Procedure Act (5 U.S.C. 553(b)(B)) to amend this table without prior notice and comment. Due to the technical nature of the table, further notice and comment would be unnecessary.

IV. Summary of Impacts

The impacts estimated to be attributable to the final rule are the same as those estimated to be attributable to the proposed rule (62 FR 15228, March 31, 1997). Nationwide emissions of formaldehyde from existing RS and FA manufacturing lines are estimated to be 1,770 Mg/yr (1,950 ton/yr) at the current level of control. Implementation of the final rule will reduce nationwide formaldehyde emissions from existing sources by 410 Mg/yr (450 ton/yr). Emission reductions from RS manufacturing lines producing building insulation constitute the entire reduction; there are no emission reductions from FA manufacturing lines. Reduction in formaldehyde emissions from new RS manufacturing lines is estimated to be 120 Mg/yr (130 ton/yr) in the fifth year of the standard. Total reductions in formaldehyde emissions from both existing and new RS manufacturing lines, therefore will be 530 Mg/yr (580 ton/yr). Nationwide PM emissions from existing glass-melting furnaces at the current level of control, are about 750 Mg/yr (830 ton/yr). Under this rule, PM emissions from existing furnaces will be reduced by about 600 Mg/yr (660 ton/yr), of which 40 Mg/yr (50 ton/yr) is particulate matter less than 10 microns (μm) in diameter (PM–10). The PM emission reduction from new glass-melting furnaces resulting from this rule is estimated to be 160 Mg/yr (180 ton/yr) in the fifth year of the standard. Under the final rule, PM emissions from existing and new furnaces will be reduced by a total of 760 Mg/yr (840 ton/yr). Current nationwide emissions of metal HAPs from existing furnaces is 270 kg/yr (600 lb/yr). Under the final rule, metal HAP emissions from existing furnaces and new furnaces will be reduced by 9 kg/yr (20 lb/yr) and 2 kg/yr (5 lb/yr), respectively.

The EPA expects no water or solid waste impacts from the final rule. Because this standard is based on the use of baghouses, dry ESP's, thermal incinerators, and process modifications, there are no water pollution impacts. One existing RS manufacturing line uses scrubbers to control HAP emissions from forming. This rule will not affect the water pollution impact of the scrubbers. No additional sources are expected to add wet scrubbers for the control of HAP emissions. The PM captured by the baghouses added to existing uncontrolled electric furnaces will be recycled back to the furnace and no solid or hazardous waste is generated by the use of thermal incinerators. The EPA estimates that the rule will have a minor impact on energy consumption.

The total nationwide capital cost for existing glass-melting furnaces under the final rule is $3.2 million; the total annual cost is $1.5 million. These costs result from the expected addition of baghouses to seven electric glass-melting furnaces as well as the monitoring costs of bag leak detection systems installed on baghouses and temperature monitors installed on cold top electric furnaces.

The EPA estimates the nationwide capital costs of upgrading process modifications on 30 RS manufacturing lines to be $16.3 million, with annual costs of $4.8 million. None of the existing curing ovens that are uncontrolled for HAPs will have to add an incinerator. None of the FA manufacturing lines subject to the rule will require additional controls to comply with the emission standards. Therefore, no control costs are associated with complying with the final rule for FA manufacturing lines. For all RS and FA manufacturing lines subject to the standard, there is a one-time cost of $15,000 per line to establish the process parameter values for compliance monitoring. Because the parameters that the owner or operator is required to monitor on RS and FA manufacturing lines are currently monitored by the industry, no additional costs will be incurred for monitoring beyond the one-time cost of $15,000 per line.

Total nationwide capital cost for the standard is estimated to be $19.5 million and annual nationwide cost is estimated to be $6.3 million/yr, including installation, operation, and maintenance of emission control and monitoring systems.

The economic analysis of the rule finds impacts at the facility and market-level to be modest. The average market price increases for both structural and nonstructural wool fiberglass are expected to be less than 0.5 percent. The resultant decreases in quantity demanded range from 0.17 percent for structural insulation markets to 0.22 percent for nonstructural insulation markets. None of the affected firms are classified as small businesses and no closures are predicted.

V. Summary of Responses to Major Comments

The EPA received nine comment letters on the proposed NESHAP for wool fiberglass manufacturing. A copy of each comment letter is available for public inspection in the docket for the rulemaking (Docket No. A–95–24; see

the **ADDRESSES** section of this preamble for information on inspecting the docket). The EPA has had follow-up discussions with commenters regarding specific issues initially raised in their written comments. Copies of correspondence and other information exchanged between the EPA and the commenters during the post-comment period are available for public inspection in the docket for the rulemaking.

All comments received by EPA were reviewed and carefully considered by the Agency. The EPA made changes to the rule where appropriate. A summary of responses to major comments received on the proposed rule is presented below. Additional discussion of the EPA's responses to public comments is presented in the document "Summary of Public Comments and Responses on Wool Fiberglass Manufacturing NESHAP" (Docket A-95-24, Item V-C-2).

A. Selection of Pollutants

Comment: Two commenters stated that the issues of fine mineral fibers as HAP and the health effects of wool fiberglass particles greater than 1 micron in diameter should be addressed. One commenter stated that because the definition of fine mineral fibers is under review in response to new data on health effects and respirability, the EPA should address in the final preamble the possibility of a new definition for fine mineral fibers and its effects on the NESHAP.

Response: The rule does not include emission limits for fine mineral fibers at wool fiberglass manufacturing facilities because EPA determined that the affected sources do not emit "fine mineral fibers," as presently defined by the CAA. Fiberglass emissions from the affected manufacturing lines at wool fiberglass manufacturing facilities consist of clumps of fibers that are much larger than 10 micrometers in diameter. The CAA, by contrast, defines "fine mineral fibers" to include mineral fiber emissions from facilities manufacturing or processing glass, rock, or slag fibers (or other mineral derived fibers) of average diameter 1 micrometer or less. (See section 112(b)(1)n.3.)

B. Selection of Emission Limits

Comment: One commenter stated that the EPA determined the MACT floor for glass-melting furnaces inappropriately by establishing equipment standards as the MACT floor rather than a straightforward determination of numerical MACT floors as specified in section 112(d)(3) of the CAA. Such an approach, according to the commenter, has allowed the EPA to use emissions data from the worst performing units to set emission limits that are no more stringent than the nearly 20-year-old NSPS for glass-melting furnaces. The commenter believes that new baghouses and precipitators, and low-cost upgrades of existing ones, would allow much more stringent emission limits. The commenter stated that the EPA should base the MACT floors on the numerical emissions of the best performing 12 percent for existing sources and the best performing source for new sources and revise the emission limits to be consistent with the more stringent floors.

Response: In determining the MACT floor, the EPA is not limited merely to examining emissions test data from the best performing sources and calculating the numeric mean of such sources' emission rates, because the test data may not translate directly to truly achievable standards. Rather, the Agency has taken alternative approaches to establishing MACT floors in the past, depending on the type, quality, and applicability of available emissions information. (See 62 FR 49051, 49060 (September 18, 1997) (describing various alternatives)).

Among the standard options the EPA may follow is to establish the floor in consideration of the emissions control technology used by the best performing sources. Specifically, the Agency could establish the new source MACT floor based on the technology employed by the best-controlled similar source and the existing source MACT floor based on the technology used by the average of the best-performing 12 percent of sources (or, in the case of categories with fewer than 30 sources, the average of the best-performing five sources). The EPA would then calculate a numeric MACT emission limit that is achievable in practice by sources employing that technology, in view of process and air pollution control device variability.

The EPA followed this technology-driven approach in the present rulemaking. Available emissions information indicates that both baghouses and ESP's are equally effective in controlling PM emissions from glass-melting furnaces, and that the best performing sources in the wool fiberglass source category employ such technology. Accordingly, the Agency determined that either of these technologies, when well-designed and well-operated, would form the basis of the MACT floor for controlling emissions from glass-melting furnaces in this source category. The EPA then sought, consistent with the CAA, to express the MACT floor in terms of a numeric emissions limit. To do so, it evaluated existing test data from wool fiberglass facilities controlling glass-melting furnace emissions with baghouses and ESP's. Because the measured emission rates varied, even though each of the sources had well-operated and maintained air pollution control equipment, the Agency concluded that the measured rates were indicative of equipment and process variability. The EPA therefore established the MACT floor at an emission level achievable by the best performing technology, after accounting for normal operating variability.

The Agency's approach in this rulemaking to determine the applicable MACT floors is consistent with the CAA. The CAA requires a standard that is "achievable" (42 U.S.C. 112(d)(2) ("Emission standards * * * shall require the maximum degree of reductions in emissions * * * that the Administrator * * * determines is achievable * * * "))). However, the commenter's insistence on setting the MACT floor based solely on a numeric average would require the Agency to establish a standard that, in light of normal and unavoidable control equipment and process variability, would not be achievable consistently by the best performing sources in the category. The EPA's method in the present rulemaking, by contrast, heeds Congress's attention to achievability and is a prudent exercise of the discretion the CAA grants the Agency "to use its best engineering judgment in collecting and analyzing the (available emissions) data, and in assessing the data's comprehensiveness, accuracy, and *variability*, in order to determine which sources achieve the best emission reductions." (59 FR 29196, 29199 (June 6, 1994)) (emphasis added). See also *National Lime Association* v. *E.P.A.*, 627 F.2d 416, 431 n. 46 (D.C. Cir. 1980) ("to be achievable, we think a uniform standard must be capable of being met under most adverse conditions which can reasonably be expected to recur").

Comment: Two commenters stated that the EPA is not limited to setting emission limits at the MACT floors and thermal and catalytic incinerators could provide cost-effective 98 to 99 percent emission reductions on RS forming, curing, and cooling and FA forming and curing. According to one commenter, the emission limits for flame attenuation manufacturing lines are much too high; more appropriate formaldehyde emission limits are 0.068–0.078 lb/ton. Another commenter stated that emissions as low as 0.02 kg/Mg for RS manufacturing, 0.13 kg/Mg for heavy-density flame attenuation

manufacturing, and 0.11 kg/Mg for pipe flame attenuation manufacturing could be achieved if catalytic oxidation were used to control forming, curing, and cooling processes. According to one commenter, the EPA should also consider other creative control technology applications, for example, ducting multiple sources, such as forming and curing, to a single control unit at a much lower cost than separate controls on individual process units while achieving 98–99 percent reduction in forming and curing oven emissions. One commenter also stated that the EPA has ignored the use of carbon-and zeolite-based concentrators, which can reduce exhaust volumes thereby reducing the size and cost of required control devices. According to this commenter, such concentrators can reduce exhaust volumes to be treated at least tenfold and sometimes much greater allowing the use of small control devices after forming and curing. Alternatively, the concentrated exhaust could be ducted to the curing oven or curing oven control device, thus allowing for low-cost control of emissions from the entire wool fiberglass manufacturing line.

Response: Even though incineration is demonstrated on rotary spin curing ovens and is the MACT floor for new and existing rotary spin curing ovens, incineration is not demonstrated for rotary spin forming or for flame attenuation forming or flame attenuation curing. Further, concentrators are not demonstrated in this industry for any process. Although not demonstrated, the EPA considered the beyond-the-floor control option of incineration for both rotary spin forming and flame attenuation forming and curing processes. According to an analysis of the cost effectiveness of beyond-the-floor controls for RS manufacturing lines, the cost effectiveness of controlling formaldehyde emissions from forming using incineration is $183,000 per ton of formaldehyde reduction. On FA manufacturing lines producing heavy-density products, the cost effectiveness of controlling formaldehyde emissions using incineration is $1.95 million per ton of formaldehyde reduction for forming processes and $13.5 million per ton of formaldehyde reduction for curing processes. On FA manufacturing lines producing pipe products, the cost effectiveness of controlling formaldehyde emissions using incineration is $2.7 million per ton of formaldehyde reduction for forming processes and $42.3 million per ton of formaldehyde reduction for curing processes. At this time, the EPA considers that the cost effectiveness of these beyond-the-floor controls are not reasonable. Therefore, the EPA rejected beyond-the-floor controls and set emission standards at the MACT floor level.

Comment: A commenter stated that, in light of formaldehyde classification as a Class B1, probable human carcinogen, the EPA should reconsider its use of the largest emission rates as the emission limits for the flame attenuation lines producing pipe products and heavy-density products. According to one commenter, the emission limits for flame attenuation manufacturing lines are much too high with more appropriate formaldehyde emission limits being 0.068–0.078 lb/ton. Another commenter stated that emissions as low as 0.13 kg/Mg for heavy-density flame attenuation manufacturing, and 0.11 kg/Mg for pipe flame attenuation manufacturing could be achieved if catalytic oxidation were used to control forming, curing, and cooling processes.

Response: In establishing emission limits for affected FA manufacturing lines, the EPA followed the approach used for glass-melting furnaces. Process modifications constitute the pollution control technology used by the best performing sources, and each of the facilities currently producing pipe insulation and heavy density products employ an identical level of process modifications on their FA manufacturing lines. Nevertheless, the measured emission rates of formaldehyde from these sources varied. Because the same degree of pollution control had different emission rates, the Agency concluded that operational variability accounted for the differences and factored such variability into the promulgated emission standard by setting the MACT floor at a level achievable in practice by sources using the identified technology.

Comment: Because the EPA is allowing averaging of emissions across the various units making up the manufacturing line, one commenter stated that this tends to increase emissions above those associated with emission limits on separate process units and that EPA should set emission limits more stringent than the sum of the floor limits rather than allow averaging.

Response: In setting emission limits for rotary spin and flame attenuation manufacturing lines, the EPA used available emissions data for each process unit (forming, curing, and cooling for rotary spin lines, and forming and curing for flame attenuation lines) to determine the appropriate MACT floor for each process unit in the line. The Agency then summed emissions from the MACT floors to create a resultant line-based MACT floor emission limit. Therefore, the EPA disagrees that these "line" limits are less stringent than the limits that would have been established for individual process units if the source subject to MACT had been defined more narrowly. For instance, because the MACT floor for cooling on rotary spin lines and for curing on flame attenuation lines is no control, the EPA may not have set emission limits for these sources if limits were set on a unit-by-unit basis. Thus, potentially higher emissions would have been allowed than are currently being allowed under this rule.

C. Monitoring

Comment: Several comments were received concerning the use of bag leak detectors for monitoring baghouses used to control emissions from glass-melting furnaces. One commenter stated that because the industry standard for sensitivity of bag leak detectors is 0.0005 gr/dscf, the sensitivity cited in the rule should be changed from 0.0004 gr/dscf to 0.0005 gr/dscf.

According to another commenter, the requirements to install and operate bag leak detectors according to EPA guidance (§ 63.1384(b)(5)) will be difficult to enforce. The commenter further stated that if EPA wants the guidance to be followed, it should be contained in a rule; if not, it should be in the preamble as recommended practice.

Another commenter asked if a source would be in violation of the standard if the alarm on the bag leak detector is activated more than 10 percent of the total operating time during a 6-month block reporting period.

Response: After reviewing technical data from a supplier of dust detection equipment and reviewing other EPA standards that require bag leak detectors for consistency, EPA has modified the required sensitivity level to "0.0044 gr/dscf or less." This change does not alter the intended function of the bag leak detector, and is consistent with the industry standard for sensitivity and other EPA standards.

Although EPA understands, as the one commenter indicated, that enforcement may be more difficult, there are currently no performance specifications available for bag leak detectors. EPA guidance on the use of triboelectric bag leak detectors has been developed and is cited in the rule along with information on its availability.

In the proposed and final rules, the source would not be in violation of the standard if the alarm on the bag leak detector is activated more than 10 percent of the total operating time during a 6-month block reporting period. The EPA issued a supplemental proposal (64 FR 7149, February 12, 1999) for wool fiberglass and other source categories which, along with other compliance issues, deals with the question as to the existence of a violation when the bag leak detector alarm is activated and how it is enforced. The EPA will consider all comments on the supplemental proposal and will amend this final rule in a future action as appropriate.

Comment: For clarity with State agencies, one commenter recommended that the requirement in § 63.1386(e) to "continuously monitor and record" as it applies to glass pull rate be defined to mean to install, operate and maintain pull rate monitoring and recording equipment per the written operations, maintenance, and monitoring plan.

Response: Based on additional information provided by the commenter, EPA learned that the commenter would like the rule to clarify the monitoring and recording frequency associated with continuous monitors for glass pull rate. According to the commenter, the process is very steady and there is not a need for minute-by-minute monitoring and recordkeeping. EPA has revised the rule to require that on existing glass-melting furnaces with continuous monitors and on all new glass-melting furnaces, the glass pull rate must be monitored and recorded on an hourly basis and every 4 hours an average is to be calculated for purposes of determining compliance. At any time that a 4-hour average pull rate exceeds the average pull rate established during the performance test by greater than 20 percent, corrective action must be initiated within 1 hour. If a 20 percent or more exceedance of the pull rate occurs for more than 5 percent of the total operating time in the 6-month block reporting period, a QIP is required. The final rule requires the owner operate the glass-melting furnace so that the glass pull rate does not exceed, by more than 20 percent, the established maximum glass pull rate for more than 10 percent of the total operating time in the 6-month block reporting period.

As a result of this comment, the EPA examined the other monitoring provisions and made similar clarifying changes throughout the monitoring section as they pertain to monitoring frequency and averaging period.

D. Performance Tests

Comment: One commenter recommended revisions to the monitoring requirements of § 63.1386(g)(2) to clarify that if changes are made in the binder formulation that would not result in an increase in HAP emissions, such as the use of resin extenders, additional emissions testing is not required. The commenter explained that binder formulations are developed and controlled centrally by technical experts at each company and are not subject to modification at each plant. According to this commenter, normal practice is for any new binder formulation to be supported by additional emission tests. For reasons of material availability and cost reduction, the commenter explained that the binder formulation specification allows some flexibility for substituting resin extenders. During subsequent discussions with the commenter, it was explained that extenders replace components of the binder and that urea and lignin are used as extenders and replace some of the formaldehyde and phenol in the binder. The extenders act to dilute the binder and because the rate of application of the extended binder does not change, the emissions of formaldehyde and phenol are decreased.

Response: Based on this comment as well as additional information supplied by the commenter on the use of extenders and their effects on formaldehyde emissions, the EPA has revised the rule to permit the addition of the extenders urea and lignin in the binder formulations without the need to perform additional emission testing.

During discussions to obtain additional information from the commenter on this issue, the commenter was also concerned that the occasional switching of resin suppliers where the resins are made to the same specifications, may be interpreted by enforcement agencies as a change in resin and require additional emissions testing. The EPA does not intend for additional emission testing to be performed where a facility switches resin suppliers as long as the resin from the new supplier is made to the same product specifications as that used during the performance test.

VI. Administrative Requirements

A. Docket

The docket is intended to be an organized file of the administrative records compiled by EPA. The docket is a dynamic file because information is added throughout the rulemaking development. The docketing system is intended to allow members of the public and industries involved to readily identify and locate documents so that they can effectively participate in the rulemaking process. Along with the proposed and promulgated standards and their preambles, the docket will contain the record in case of judicial review. (See section 307(d)(7)(A) of the CAA.) The location of the official rulemaking record, including all public comments received on the proposed rule, is in the **ADDRESSES** section at the beginning of this preamble.

B. Executive Order 12866—Regulatory Planning and Review

Under Executive Order 12866 (58 FR 51735, October 4, 1993), the EPA must determine if a regulatory action is "significant," and therefore subject to review by OMB and the requirements of the Executive Order. The Executive Order defines "significant regulatory action" as one that is likely to result in a rule that may:

(1) Have an annual effect on the economy of $100 million or more or adversely affect in a material way the economy, a sector of the economy, productivity, competition, jobs, the environment, public health or safety, or State, local, or tribal governments or communities;

(2) Create a serious inconsistency or otherwise interfere with an action taken or planned by another agency;

(3) Materially alter the budgetary impact of entitlements, grants, user fees, or loan programs, or the rights and obligation of recipients thereof; or

(4) Raise novel legal or policy issues arising out of legal mandates, the President's priorities, or the principles set forth in the Executive Order.

It has been determined that this final rule is not a "significant regulatory action" under the terms of the Executive Order and is therefore not subject to OMB review.

C. Executive Order 12875—Enhancing the Intergovernmental Partnership

Under Executive Order 12875, the EPA may not issue a regulation that is not required by statute and that creates a mandate upon a State, local or tribal government, unless the Federal government provides the funds necessary to pay the direct compliance costs incurred by those governments, or the EPA consults with those governments. If the EPA complies by consulting, Executive Order 12875 requires the EPA to provide to the OMB a description of the extent of the EPA's prior consultation with representatives of affected State, local and tribal governments, the nature of their concerns, copies of any written

communications from the governments, and a statement supporting the need to issue the regulation. In addition, Executive Order 12875 requires the EPA to develop an effective process permitting elected officials and other representatives of State, local and tribal governments "to provide meaningful and timely input in the development of regulatory proposals containing significant unfunded mandates."

Today's rule does not create a mandate on State, local or tribal governments. The rule does not impose any enforceable duties on State, local or tribal governments, because they do not own or operate any sources that would be subject to this rule. Accordingly, the requirements of section 1(a) of Executive Order 12875 do not apply to this rule.

D. Unfunded Mandates Reform Act

Title II of the Unfunded Mandates Reform Act of 1995 (UMRA), Pub. L. 104–4, establishes requirements for Federal agencies to assess the effects of their regulatory actions on State, local, and tribal governments and the private sector. Under section 202 of the UMRA, the EPA generally must prepare a written statement, including a cost-benefit analysis, for proposed and final rules with "Federal mandates" that may result in expenditures by State, local, and tribal governments, in the aggregate, or by the private sector, of $100 million or more in any one year. Before promulgating an EPA rule for which a written statement is needed, section 205 of the UMRA generally requires the EPA to identify and consider a reasonable number of regulatory alternatives and adopt the least costly, most cost-effective or least burdensome alternative that achieves the objectives of the rule. The provisions of section 205 do not apply when they are inconsistent with applicable law. Moreover, section 205 allows the EPA to adopt an alternative other than the least costly, most cost-effective or least burdensome alternative if the Administrator publishes with the final rule an explanation why that alternative was not adopted. Before the EPA establishes any regulatory requirements that may significantly or uniquely affect small governments, it must have developed under section 203 of the UMRA a small government agency plan. The plan must provide for notifying potentially affected small governments, enabling officials of affected small governments to have meaningful and timely input in the development of EPA regulatory proposals with significant Federal intergovernmental mandates, and informing, educating, and advising small governments on compliance with the regulatory requirements.

The EPA has determined that this rule does not contain a Federal mandate that may result in expenditures of $100 million or more for State, local, and tribal governments, in the aggregate, or the private sector in any one year. The EPA has determined that the total nationwide capital cost for the standard is approximately $19.5 million and the annual nationwide cost is approximately $6.3 million/yr. This rule is based partially on pollution prevention alternatives and on a manufacturing line approach. It is the least costly and burdensome approach for industry since the purchase of add-on control devices will be avoided by most of the industry. The only costs to State and local governments are those associated with implementing this standard through the permitting process, and these costs are recouped through permit fees. Thus, today's rule is not subject to the requirements of sections 202 and 205 of the UMRA. In addition, the EPA has determined that this rule contains no regulatory requirements that might significantly or uniquely affect small governments because it does not impose any enforceable duties on small governments; such governments own or operate no sources subject to these rules and therefore would not be required to purchase control systems to meet the requirements of the rule.

E. Regulatory Flexibility

The Regulatory Flexibility Act (RFA) generally requires an agency to conduct a regulatory flexibility analysis of any rule subject to notice and comment rulemaking requirements unless the agency certifies that the rule will not have a significant economic impact on a substantial number of small entities. Small entities include small businesses, small not-for-profit enterprises, and small governmental jurisdictions.

EPA has determined that it is not necessary to prepare a regulatory flexibility analysis in connection with this final rule. EPA has also determined that this rule will not have a significant impact on a substantial number of small entities because no company that owns sources in the source category meets the criteria for small business. The Small Business Administration defines "small business," as the term applies to SIC 3296, as a firm with fewer than 750 employees. None of the firms in the industry have fewer than 750 employees and, thus, are not small businesses by this criterion.

F. Submission to Congress and the General Accounting Office

The Congressional Review Act, 5 U.S.C. 801 *et seq.*, as added by the Small Business Regulatory Enforcement Fairness Act of 1996, generally provides that before a rule may take effect, the agency promulgating the rule must submit a rule report, which includes a copy of the rule, to each House of the Congress and to the Comptroller General of the United States. EPA will submit a report containing this rule and other required information to the U.S. Senate, the U.S. House of Representatives, and the Comptroller General of the United States prior to publication of the rule in the **Federal Register**. This action is not a "major rule" as defined by 5 U.S.C. 804(2). This rule will be effective June 14, 1999.

G. Paperwork Reduction Act

The OMB has approved the information collection requirements contained in this rule under the provisions of the PRA, 44 U.S.C. 3501 *et seq.* and has assigned OMB control number 2060–0359.

The information collection requirements include the notification, reporting, and recordkeeping requirements of the NESHAP general provisions, authorized under section 114 of the CAA, which are mandatory for all owners or operators subject to national emission standards. All information submitted to the EPA for which a claim of confidentiality is made is safeguarded according to Agency policies in 40 CFR part 2, subpart B. This rule does not require any notifications or reports beyond those required by the general provisions. Subpart NNN does require additional records of specific information needed to determine compliance with the rule. These include records of: (1) Any bag leak detection system alarm, including the date and time, with a brief explanation of the cause of the alarm and the corrective action taken; (2) ESP parameter values, such as secondary voltage for each electrical field including any deviation outside the limits established during the performance test and a brief explanation of the cause of the deviation and the corrective action taken; (3) air temperature above the surface of the molten glass of a cold top electric furnace that does not use an add-on control device for PM emission control, including any air temperature above 120 °C (250 °F) with a brief explanation of the cause and the corrective action taken; (4) operating parameter(s) for uncontrolled glass melting furnace (that

is not a cold top electric furnace) that does not use an add-on control device for the control of PM emissions including any exceedance of the level established during the performance test and a brief explanation of the cause of the exceedance and the corrective action taken; (5) the free-formaldehyde content of the resin being used; (6) the formulation of the binder being used; (7) the product LOI and product density for each 8-hour period on a RS or FA manufacturing line subject to the NESHAP; (8) forming process modification parameter(s), including any period when the parameter level(s) deviate from the level(s) established during the performance test and a brief explanation of the cause of the deviation and the corrective action taken; (9) pressure drop, liquid flow rate, and information on chemical additives to the scrubbing liquid, including any period when there is a deviation from the levels established during the performance tests and a brief explanation of the cause and the corrective action taken; (10) incinerator operating temperature, including any 3-hour block period when the temperature falls below the level established during the performance test, and the results of the annual inspection, including any problems discovered during the inspection, with a brief explanation of the cause and, the corrective action taken; and (11) glass pull rate, including any period when the pull rate exceeds the average pull rate established during the performance test by more than 20 percent, with a brief explanation of the cause of the exceedance, the corrective action taken, and the time the corrective action was initiated. All records documenting corrective actions must include the time of the alarm, deviation, or exceedance and the time that the corrective action is initiated as well as when the cause of the alarm, deviation, or exceedance is corrected. Each of these information requirements is needed to determine compliance with the standards.

The annual public reporting and recordkeeping burden to industry for this collection is estimated at 17,100 labor hours per year at an annual cost of $548,000. This estimate includes a one-time performance test and report (with repeat tests where needed); one-time preparation of a startup, shutdown, and malfunction plan with semiannual reports of any event in which the procedures in the plan were not followed; semiannual excess emissions reports; notifications; and recordkeeping. The annualized capital cost associated with monitoring requirements is estimated at $41,000. The operation and maintenance cost is estimated at $3,000/yr.

Burden means the total time, effort, or financial resources expended by persons to generate, maintain, retain, or disclose or provide information to or for a Federal agency. This includes the time needed to review instructions; develop, acquire, install, and utilize technology and systems for the purpose of collecting, validating, and verifying information, processing and maintaining information, and disclosing and providing information; adjust the existing ways to comply with any previously applicable instructions and requirements; train personnel to be able to respond to a collection of information; search data sources; complete and review the collection of information; and transmit or otherwise disclose the information.

An Agency may not conduct or sponsor, and a person is not required to respond to, a collection of information unless it displays a currently valid OMB control number. The OMB control numbers for EPA's regulations are listed in 40 CFR part 9 and 48 CFR chapter 15. The EPA is amending the table in 40 CFR part 9 of currently approved ICR control numbers issued by OMB for various regulations to list the information requirements contained in this final rule.

H. Pollution Prevention Act

The Pollution Prevention Act of 1990 states that pollution should be prevented or reduced at the source whenever feasible. The emission standards for RS and FA manufacturing lines subject to the standard are formulated as line standards, i.e., the sum of the individual forming, curing, and cooling MACT floor emission levels for RS manufacturing lines and forming and curing MACT floor emission levels for certain FA manufacturing lines. By formulating the standard as a line standard, tradeoffs are allowed for existing facilities that will accomplish the same environmental results at lower costs and will encourage process modifications and pollution prevention alternatives. According to the industry, new RS manufacturing lines may be able to meet the line standard without the use of costly incinerators with their energy and other environmental impacts, such as increased nitrogen oxides (NO_X) and sulfur oxides (SO_X) emissions, by incorporating pollution prevention measures, such as binder reformulation and improved binder application efficiency. Pollution prevention alternatives will also increase binder utilization efficiency and reduce production costs for industry. In selecting the format of the emission standard for emissions from manufacturing lines, the EPA considered various alternatives such as setting separate emission limits for each process, i.e., forming, curing, and cooling. A line standard gives the industry greater flexibility in complying with the emission limits and is the least costly because industry can avoid the capital and annual operating and maintenance costs associated with the purchase of add-on control equipment by using pollution prevention measures.

I. National Technology Transfer and Advancement Act

Section 12(d) of the National Technology Transfer and Advancement Act (NTTAA), Pub. L. 104–113 (March 7, 1996), directs the EPA to use voluntary consensus standards in regulatory and procurement activities unless to do so would be inconsistent with applicable law or otherwise impractical. Voluntary consensus standards are technical standards (such as materials specifications, test methods, sampling procedures, and business practices) which are developed or adopted by voluntary consensus standard bodies. Where available and potentially applicable voluntary consensus standards are not used by EPA, the Act requires the Agency to provide Congress, through the OMB, an explanation for not using such standards. This section summarizes the EPA's response to the requirements of the NTTAA for the analytical test methods promulgated as part of this final rule.

Consistent with the NTTAA, the EPA conducted searches to identify voluntary consensus standards for the EPA's emissions sampling and analysis reference methods and industry recommended materials analysis procedures cited in this rule. Candidate voluntary consensus standards for materials analysis were identified for product loss on ignition (LOI), product density, and free formaldehyde content. Consensus comments provided by industry experts were that the candidate standards did not meet industry materials analysis requirements. Therefore, EPA has determined these voluntary consensus standards were impractical for the wool fiberglass manufacturing NESHAP. The EPA, in consultation with the North American Insulation Manufacturers Association (NAIMA), has formulated industry-specific materials analysis, consensus standards which are promulgated in this rule.

The EPA search to identify voluntary consensus standards for the EPA's emissions sampling and analysis reference methods cited in this rule identified 17 candidate standards that appeared to have possible use in lieu of EPA standard reference methods. However, after reviewing available standards, EPA determined that 12 of the candidate consensus standards identified for measuring emissions of the HAPs or surrogates subject to emission standards in the rule would be not be practical due to lack of equivalency, documentation, validation data and other important technical and policy considerations. Five of the remaining candidate consensus standards are new standards under development that EPA plans to follow, review and consider adopting at a later date. This rule requires standard EPA emission test methods known to the industry and States. Approved alternative methods also may be used with prior EPA approval.

J. Executive Order 13045—Protection of Children From Environmental Health Risks and Safety Risks

Executive Order 13045 (62 FR 19885, April 23, 1997) applies to any rule that(1) is determined to be "economically significant" as defined under Executive Order 12866, and (2) concerns the environmental health or safety risk that the EPA has reason to believe may have a disproportionate effect on children. If the regulatory action meets both criteria, the Agency must evaluate the environmental health or safety effects of the planned rule on children and explain why the planned regulation is preferable to other potentially effective and reasonably feasible alternatives considered by the Agency.

The EPA interprets Executive Order 13045 as applying only to those regulatory actions that are based on health or safety risks, such that the analysis required under section 5-501 of the Order has the potential to influence the regulation. This final rule is not subject to Executive Order 13045 because it is not an economically significant regulatory action as defined by Executive Order 12866, and it is based on technology performance and not on health or safety risks.

K. Executive Order 13084—Consultation and Coordination With Indian Tribal Governments

Under Executive Order 13084, the EPA may not issue a regulation that is not required by statue, that significantly or uniquely affects the communities of Indian tribal governments, and that imposes substantial direct compliance costs on those communities, unless the Federal government provides the funds necessary to pay the direct compliance costs incurred by the tribal governments, or the EPA consults with those governments. If the EPA complies by consulting, Executive Order 13084 requires the EPA to provide to the OMB, in a separately identified section of the preamble to the rule, a description of the extent of EPA's prior consultation with representatives of affected tribal governments, a summary of the nature of their concerns, and a statement supporting the need to issue the regulation. In addition, Executive Order 13084 requires the EPA to develop an effective process permitting elected officials and other representatives of Indian tribal governments "to provide meaningful and timely input in the development of regulatory policies on matters that significantly or uniquely affect their communities."

Today's rule does not significantly or uniquely affect the communities of Indian tribal governments. No wool fiberglass manufacturing facilities are owned or operated by Indian tribal governments. Accordingly, the requirements of section 3(b) of Executive Order 13084 do not apply to this rule.

List of Subjects

40 CFR Part 9

Environmental protection, Reporting and recordkeeping requirement

40 CFR Part 63

Environmental protection, Air pollution control, Hazardous substances, Reporting and recordkeeping requirements, Wool fiberglass manufacturing.

Dated: May 13, 1999.

Carol M. Browner,

Administrator.

For the reasons set out in the preamble, parts 9 and 63 of title 40, chapter I of the Code of Federal Regulations are amended as follows:

PART 9—OMB APPROVALS UNDER THE PAPERWORK REDUCTION ACT

1. The authority citation for part 9 continues to read as follows:

Authority: 7 U.S.C. 135 *et seq.*, 136-136y; 15 U.S.C. 2001, 2003, 2005, 2006, 2601-2671; 21 U.S.C. 331j, 346a, 348; 31 U.S.C. 9701; 33 U.S.C. 1251 *et. seq.*, 1311, 1313d, 1314, 1318, 1321, 1326, 1330, 1342, 1344, 1345 (d) and (e), 1361; E.O. 11735, 38 FR 21243, 3 CFR, 1971-1975 Comp. p. 973; 42 U.S.C. 241, 242b, 243, 246, 300f, 300g, 300g-1, 300g-2, 300g-3, 300g-4, 300g-5, 300g-6, 300j-1, 300j-2, 300j-3, 300j-4, 300j-9, 1857 *et seq.*, 6901-6992k, 7401-7671q, 7542, 9601-9657, 11023, 11048.

2. In § 9.1, the table is amended by adding new entries in numerical order under the indicated heading to read as follows:

§ 9.1 OMB approvals under the Paperwork Reduction Act.

* * * * *

40 CFR citation	OMB control No.
* * * * *	
National Emission Standards for Hazardous Air Pollutants for Source Categories [3]	
* * * * *	
63.1383	2060-0359
63.1386	2060-0359
63.1387	2060-0359
* * * * *	

[3] The ICRs referenced in this section of the table encompass the applicable general provisions contained in 40 CFR part 63, subpart A, which are not independent information collection requirements.

* * * * *

PART 63—NATIONAL EMISSION STANDARDS FOR HAZARDOUS AIR POLLUTANTS FOR SOURCE CATEGORIES

3. The authority citation for part 63 continues to read as follows:

Authority: 42 U.S.C. 7401 *et seq.*

4. Part 63 is amended by adding subpart NNN consisting of §§ 63.1380 through 63.1399 to read as follows:

Subpart NNN—National Emission Standards for Hazardous Air Pollutants for Wool Fiberglass Manufacturing

Sec.

63.1380 Applicability.
63.1381 Definitions.
63.1382 Emission standards.
63.1383 Monitoring requirements.
63.1384 Performance test requirements.
63.1385 Test methods and procedures.
63.1386 Notification, recordkeeping, and reporting requirements.
63.1387 Compliance dates.
63.1388—63.1399 [Reserved]

Table 1 to Subpart NNN of part 63—Applicability of general provisions (40 CFR part 63, subpart A) to subpart NNN.

Appendix A to Subpart NNN of part 63—Method for the determination of LOI

Appendix B to Subpart NNN of part 63—Free formaldehyde analysis of insulation resins by hydroxylamine hydrochloride

Appendix C to Subpart NNN of part 63—Method for the determination of product density

Subpart NNN—National Emission Standards for Hazardous Air Pollutants for Wool Fiberglass Manufacturing

§ 63.1380 Applicability.

(a) Except as provided in paragraphs (b) and (c) of this section, the requirements of this subpart apply to the owner or operator of each wool fiberglass manufacturing facility that is a major source or is located at a facility that is a major source.

(b) The requirements of this subpart apply to emissions of hazardous air pollutants (HAPs), as measured according to the methods and procedures in this subpart, emitted from the following new and existing sources at a wool fiberglass manufacturing facility subject to this subpart:

(1) Each new and existing glass-melting furnace located at a wool fiberglass manufacturing facility;

(2) Each new and existing rotary spin wool fiberglass manufacturing line producing a bonded wool fiberglass building insulation product; and

(3) Each new and existing flame attenuation wool fiberglass manufacturing line producing a bonded pipe product and each new flame attenuation wool fiberglass manufacturing line producing a bonded heavy-density product.

(c) The requirements of this subpart do not apply to a wool fiberglass manufacturing facility that the owner or operator demonstrates to the Administrator is not a major source as defined in § 63.2.

(d) The provisions of this part 63, subpart A that apply and those that do not apply to this subpart are specified in Table 1 of this subpart.

§ 63.1381 Definitions.

Terms used in this subpart are defined in the Clean Air Act, in § 63.2, or in this section as follows:

Bag leak detection system means systems that include, but are not limited to, devices using triboelectric, light scattering, and other effects to monitor relative or absolute particulate matter (PM) emissions.

Bonded means wool fiberglass to which a phenol-formaldehyde binder has been applied.

Building insulation means bonded wool fiberglass insulation, having a loss on ignition of less than 8 percent and a density of less than 32 kilograms per cubic meter (kg/m^3) (2 pounds per cubic foot [lb/ft^3]).

Cold top electric furnace means an all-electric glass-melting furnace that operates with a temperature of 120 °C (250 °F) or less as measured at a location 46 to 61 centimeters (18 to 24 inches) above the molten glass surface.

Flame attenuation means a process used to produce wool fiberglass where molten glass flows by gravity from melting furnaces, or pots, to form filaments that are drawn down and attenuated by passing in front of a high-velocity gas burner flame.

Glass-melting furnace means a unit comprising a refractory vessel in which raw materials are charged, melted at high temperature, refined, and conditioned to produce molten glass. The unit includes foundations, superstructure and retaining walls, raw material charger systems, heat exchangers, melter cooling system, exhaust system, refractory brick work, fuel supply and electrical boosting equipment, integral control systems and instrumentation, and appendages for conditioning and distributing molten glass to forming processes. The forming apparatus, including flow channels, is not considered part of the glass-melting furnace.

Glass pull rate means the mass of molten glass that is produced by a single glass-melting furnace or that is used in the manufacture of wool fiberglass at a single manufacturing line in a specified time period.

Hazardous Air Pollutant (HAP) means any air pollutant listed in or pursuant to section 112(b) of the Clean Air Act.

Heavy-density product means bonded wool fiberglass insulation manufactured on a flame attenuation manufacturing line and having a loss on ignition of 11 to 25 percent and a density of 8 to 48 kg/m^3 (0.5 to 3 lb/ft^3).

Incinerator means an enclosed air pollution control device that uses controlled flame combustion to convert combustible materials to noncombustible gases.

Loss on ignition (LOI) means the percent decrease in weight of wool fiberglass after it has been ignited. The LOI is used to monitor the weight percent of binder in wool fiberglass.

Manufacturing line means the manufacturing equipment for the production of wool fiberglass that consists of a forming section where molten glass is fiberized and a fiberglass mat is formed and which may include a curing section where binder resin in the mat is thermally set and a cooling section where the mat is cooled.

New source means any affected source the construction or reconstruction of which is commenced after March 31, 1997.

Pipe product means bonded wool fiberglass insulation manufactured on a flame attenuation manufacturing line and having a loss on ignition of 8 to 14 percent and a density of 48 to 96 kg/m^3 (3 to 6 lb/ft^3).

Rotary spin means a process used to produce wool fiberglass building insulation by forcing molten glass through numerous small orifices in the side wall of a spinner to form continuous glass fibers that are then broken into discrete lengths by high-velocity air flow. Any process used to produce bonded wool fiberglass building insulation by a process other than flame attenuation is considered rotary spin.

Wool fiberglass means insulation materials composed of glass fibers made from glass produced or melted at the same facility where the manufacturing line is located.

Wool fiberglass manufacturing facility means any facility manufacturing wool fiberglass on a rotary spin manufacturing line or on a flame attenuation manufacturing line.

§ 63.1382 Emission standards

(a) *Emission limits*—(1) *Glass-melting furnaces.* On and after the date the initial performance test is completed or required to be completed under § 63.7 of this part, whichever date is earlier, the owner or operator shall not discharge or cause to be discharged into the atmosphere in excess of 0.25 kilogram (kg) of particulate matter (PM) per megagram (Mg) (0.5 pound [lb] of PM per ton) of glass pulled for each new or existing glass-melting furnace.

(2) *Rotary spin manufacturing lines.* On and after the date the initial performance test is completed or required to be completed under § 63.7 of this part, whichever date is earlier, the owner or operator shall not discharge or cause to be discharged into the atmosphere in excess of:

(i) 0.6 kg of formaldehyde per megagram (1.2 lb of formaldehyde per ton) of glass pulled for each existing rotary spin manufacturing line; and

(ii) 0.4 kg of formaldehyde per megagram (0.8 lb of formaldehyde per ton) of glass pulled for each new rotary spin manufacturing line.

(3) *Flame attenuation manufacturing lines.* On and after the date the initial performance test is completed or required to be completed under § 63.7 of this part, whichever date is earlier, the owner or operator shall not discharge or cause to be discharged into the atmosphere in excess of:

(i) 3.9 kg of formaldehyde per megagram (7.8 lb of formaldehyde per ton) of glass pulled for each new flame attenuation manufacturing line that produces heavy-density wool fiberglass; and

(ii) 3.4 kg of formaldehyde per megagram (6.8 lb of formaldehyde per ton) of glass pulled from each existing

or new flame attenuation manufacturing line that produces pipe product wool fiberglass.

(b) *Operating limits.* On and after the date on which the performance test required to be conducted by §§ 63.7 and 63.1384 is completed, the owner or operator must operate all affected control equipment and processes according to the following requirements.

(1)(i) The owner or operator must initiate corrective action within 1 hour of an alarm from a bag leak detection system and complete corrective actions in a timely manner according to the procedures in the operations, maintenance, and monitoring plan.

(ii) The owner or operator must implement a Quality Improvement Plan (QIP) consistent with the compliance assurance monitoring provisions of 40 CFR part 64, subpart D when the bag leak detection system alarm is sounded for more than 5 percent of the total operating time in a 6-month block reporting period.

(2)(i) The owner or operator must initiate corrective action within 1 hour when any 3-hour block average of the monitored electrostatic precipitator (ESP) parameter is outside the limit(s) established during the performance test as specified in § 63.1384 and complete corrective actions in a timely manner according to the procedures in the operations, maintenance, and monitoring plan.

(ii) The owner or operator must implement a QIP consistent with the compliance assurance monitoring provisions of 40 CFR part 64 subpart D when the monitored ESP parameter is outside the limit(s) established during the performance test as specified in § 63.1384 for more than 5 percent of the total operating time in a 6-month block reporting period.

(iii) The owner or operator must operate the ESP such that the monitored ESP parameter is not outside the limit(s) established during the performance test as specified in § 63.1384 for more than 10 percent of the total operating time in a 6-month block reporting period.

(3)(i) The owner or operator must initiate corrective action within 1 hour when any 3-hour block average temperature of a cold top electric furnace as measured at a location 46 to 61 centimeters (18 to 24 inches) above the molten glass surface, exceeds 120 °C (250 °F) and complete corrective actions in a timely manner according to the procedures in the operations, maintenance, and monitoring plan.

(ii) The owner or operator of a cold top electric furnace must implement a QIP consistent with the compliance assurance monitoring provisions of 40 CFR part 64, subpart D when the temperature, as measured at a location 46 to 61 centimeters (18 to 24 inches) above the molten glass surface, exceeds 120 °C (250 °F) for more than 5 percent of the total operating time in a 6-month block reporting period.

(iii) The owner or operator must operate the cold top electric furnace such that the temperature does not exceed 120 °C (250 °F) as measured at a location 46 to 61 centimeters (18 to 24 inches) above the molten glass surface, for more than 10 percent of the total operating time in a 6-month reporting period.

(4)(i) The owner or operator must initiate corrective action within 1 hour when any 3-hour block average value for the monitored parameter(s) for a glass-melting furnace, which uses no add-on controls and which is not a cold top electric furnace, is outside the limit(s) established during the performance test as specified in § 63.1384 and complete corrective actions in a timely manner according to the procedures in the operations, maintenance, and monitoring plan.

(ii) The owner or operator must implement a QIP consistent with the compliance assurance monitoring provisions of 40 CFR Part 64 subpart D when the monitored parameter(s) is outside the limit(s) established during the performance test as specified in § 63.1384 for more than 5 percent of the total operating time in a 6-month block reporting period.

(iii) The owner or operator must operate a glass-melting furnace, which uses no add-on controls and which is not a cold top electric furnace, such that the monitored parameter(s) is not outside the limit(s) established during the performance test as specified in § 63.1384 for more than 10 percent of the total operating time in a 6-month block reporting period.

(5)(i) The owner or operator must initiate corrective action within 1 hour when the average glass pull rate of any 4-hour block period for glass melting furnaces equipped with continuous glass pull rate monitors, or daily glass pull rate for glass melting furnaces not so equipped, exceeds the average glass pull rate established during the performance test as specified in § 63.1384, by greater than 20 percent and complete corrective actions in a timely manner according to the procedures in the operations, maintenance, and monitoring plan.

(ii) The owner or operator must implement a QIP consistent with the compliance assurance monitoring provisions of 40 CFR part 64, subpart D when the glass pull rate exceeds, by more than 20 percent, the average glass pull rate established during the performance test as specified in § 63.1384 for more than 5 percent of the total operating time in a 6-month block reporting period.

(iii) The owner or operator must operate each glass-melting furnace such that the glass pull rate does not exceed, by more than 20 percent, the average glass pull rate established during the performance test as specified in § 63.1384 for more than 10 percent of the total operating time in a 6-month block reporting period.

(6) The owner or operator must operate each incinerator used to control formaldehyde emissions from forming or curing such that any 3-hour block average temperature in the firebox does not fall below the average established during the performance test as specified in § 63.1384.

(7)(i) The owner or operator must initiate corrective action within 1 hour when the average pressure drop, liquid flow rate, or chemical feed rate for any 3-hour block period is outside the limits established during the performance tests as specified in § 63.1384 for each wet scrubbing control device and complete corrective actions in a timely manner according to the procedures in the operations, maintenance, and monitoring plan.

(ii) The owner or operator must implement a QIP consistent with the compliance assurance monitoring provisions of 40 CFR part 64, subpart D when any scrubber parameter is outside the limit(s) established during the performance test as specified in § 63.1384 for more than 5 percent of the total operating time in a 6-month block reporting period.

(iii) The owner or operator must operate each scrubber such that each monitored parameter is not outside the limit(s) established during the performance test as specified in § 63.1384 for more than 10 percent of the total operating time in a 6-month block reporting period.

(8)(i) The owner or operator must initiate corrective action within 1 hour when the monitored process parameter level(s) is outside the limit(s) established during the performance test as specified in § 63.1384 for the process modification(s) used to control formaldehyde emissions and complete corrective actions in a timely manner according to the procedures in the operations, maintenance, and monitoring plan.

(ii) The owner or operator must implement a QIP consistent with the compliance assurance monitoring provisions of 40 CFR part 64, subpart D

when the process parameter(s) is outside the limit(s) established during the performance test as specified in § 63.1384 for more than 5 percent of the total operating time in a 6-month block reporting period.

(iii) The owner or operator must operate the process modifications such that the monitored process parameter(s) is not outside the limit(s) established during the performance test as specified in § 63.1384 for more than 10 percent of the total operating time in a 6-month block reporting period.

(9) The owner or operator must use a resin in the formulation of binder such that the free-formaldehyde content of the resin used does not exceed the free-formaldehyde range contained in the specification for the resin used during the performance test as specified in § 63.1384.

(10) The owner or operator must use a binder formulation that does not vary from the specification and operating range established and used during the performance test as specified in § 63.1384. For the purposes of this standard, adding or increasing the quantity of urea and/or lignin in the binder formulation does not constitute a change in the binder formulation.

§ 63.1383 Monitoring requirements.

On and after the date on which the performance test required to be conducted by §§ 63.7 and 63.1384 is completed, the owner or operator must monitor all affected control equipment and processes according to the following requirements.

(a) The owner or operator of each wool fiberglass manufacturing facility must prepare for each glass-melting furnace, rotary spin manufacturing line, and flame attenuation manufacturing line subject to the provisions of this subpart, a written operations, maintenance, and monitoring plan. The plan must be submitted to the Administrator for review and approval as part of the application for a part 70 permit. The plan must include the following information:

(1) Procedures for the proper operation and maintenance of process modifications and add-on control devices used to meet the emission limits in § 63.1382;

(2) Procedures for the proper operation and maintenance of monitoring devices used to determine compliance, including quarterly calibration and certification of accuracy of each monitoring device according to the manufacturers's instructions; and

(3) Corrective actions to be taken when process parameters or add-on control device parameters deviate from the limit(s) established during initial performance tests.

(b)(1) Where a baghouse is used to control PM emissions from a glass-melting furnace, the owner or operator shall install, calibrate, maintain, and continuously operate a bag leak detection system.

(i) The bag leak detection system must be certified by the manufacturer to be capable of detecting PM emissions at concentrations of 10 milligrams per actual cubic meter (0.0044 grains per actual cubic foot) or less.

(ii) The bag leak detection system sensor must produce output of relative PM emissions.

(iii) The bag leak detection system must be equipped with an alarm system that will sound automatically when an increase in relative PM emissions over a preset level is detected and the alarm must be located such that it can be heard by the appropriate plant personnel.

(iv) For positive pressure fabric filter systems, a bag leak detection system must be installed in each baghouse compartment or cell. If a negative pressure or induced air baghouse is used, the bag leak detection system must be installed downstream of the baghouse. Where multiple bag leak detection systems are required (for either type of baghouse), the system instrumentation and alarm may be shared among the monitors.

(v) A triboelectric bag leak detection system shall be installed, operated, adjusted, and maintained in a manner consistent with the U.S. Environmental Protection Agency guidance, "Fabric Filter Bag Leak Detection Guidance" (EPA-454/R-98-015, September 1997). Other bag leak detection systems shall be installed, operated, adjusted, and maintained in a manner consistent with the manufacturer's written specifications and recommendations.

(vi) Initial adjustment of the system shall, at a minimum, consist of establishing the baseline output by adjusting the range and the averaging period of the device and establishing the alarm set points and the alarm delay time.

(vii) Following the initial adjustment, the owner or operator shall not adjust the range, averaging period, alarm setpoints, or alarm delay time except as detailed in the approved operations, maintenance, and monitoring plan required under paragraph (a) of this section. In no event shall the range be increased by more than 100 percent or decreased more than 50 percent over a 365-day period unless a responsible official as defined in § 63.2 of the general provisions in subpart A of this part certifies that the baghouse has been inspected and found to be in good operating condition.

(2) The operations, maintenance, and monitoring plan required by paragraph (a) of this section must specify corrective actions to be followed in the event of a bag leak detection system alarm. Example corrective actions that may be included in the plan include the following:

(i) Inspecting the baghouse for air leaks, torn or broken bags or filter media, or any other conditions that may cause an increase in emissions.

(ii) Sealing off defective bags or filter media.

(iii) Replacing defective bags or filter media, or otherwise repairing the control device.

(iv) Sealing off a defective baghouse compartment.

(v) Cleaning the bag leak detection system probe, or otherwise repairing the bag leak detection system.

(vi) Shutting down the process producing the particulate emissions.

(c)(1) Where an ESP is used to control PM emissions from a glass-melting furnace, the owner or operator must monitor the ESP according to the procedures in the operations, maintenance, and monitoring plan.

(2)The operations, maintenance, and monitoring plan for the ESP must contain the following information:

(i) The ESP operating parameter(s), such as secondary voltage of each electrical field, to be monitored and the minimum and/or maximum value(s) that will be used to identify any operational problems;

(ii) A schedule for monitoring the ESP operating parameter(s);

(iii) Recordkeeping procedures, consistent with the recordkeeping requirements of § 63.1386, to show that the ESP operating parameter(s) is within the limit(s) established during the performance test; and

(iv) Procedures for the proper operation and maintenance of the ESP.

(d) The owner or operator must measure and record at least once per shift the temperature 46 to 61 centimeters (18 to 24 inches) above the surface of the molten glass in a cold top electric furnace that does not use any add-on controls to control PM emissions.

(e)(1) Where a glass-melting furnace is operated without an add-on control device to control PM emissions, the owner or operator must monitor the glass-melting furnace according to the procedures in the operations, maintenance, and monitoring plan.

(2) The operations, maintenance, and monitoring plan for the glass-melting

furnace must contain the following information:

(i) The operating parameter(s) to be monitored and the minimum and/or maximum value(s) that will be used to identify any operational problems;

(ii) A schedule for monitoring the operating parameter(s) of the glass-melting furnace;

(iii) Recordkeeping procedures, consistent with the recordkeeping requirements of § 63.1386, to show that the glass-melting furnace parameter(s) is within the limit(s) established during the performance test; and

(iv) Procedures for the proper operation and maintenance of the glass-melting furnace.

(f)(1) The owner or operator of an existing glass-melting furnace equipped with continuous glass pull rate monitors must monitor and record the glass pull rate on an hourly basis. For glass-melting furnaces that are not equipped with continuous glass pull rate monitors, the glass pull rate must be monitored and recorded once per day.

(2) On any new glass-melting furnace, the owner or operator must install, calibrate, and maintain a continuous glass pull rate monitor that monitors and records on an hourly basis the glass pull rate.

(g)(1) The owner or operator who uses an incinerator to control formaldehyde emissions from forming or curing shall install, calibrate, maintain, and operate a monitoring device that continuously measures and records the operating temperature in the firebox of each incinerator.

(2) The owner or operator must inspect each incinerator at least once per year according to the procedures in the operations, maintenance, and monitoring plan. At a minimum, an inspection must include the following:

(i) Inspect all burners, pilot assemblies, and pilot sensing devices for proper operation and clean pilot sensor, as necessary;

(ii) Ensure proper adjustment of combustion air and adjust, as necessary;

(iii) Inspect, when possible, internal structures, for example, baffles, to ensure structural integrity per the design specifications;

(iv) Inspect dampers, fans, and blowers for proper operation;

(v) Inspect for proper sealing;

(vi) Inspect motors for proper operation;

(vii) Inspect combustion chamber refractory lining and clean and repair/replace lining, as necessary;

(viii) Inspect incinerator shell for corrosion and/or hot spots;

(ix) For the burn cycle that follows the inspection, document that the incinerator is operating properly and make any necessary adjustments; and

(x) Generally observe that the equipment is maintained in good operating condition.

(xi) Complete all necessary repairs as soon as practicable.

(h) The owner or operator who uses a wet scrubbing control device to control formaldehyde emissions must install, calibrate, maintain, and operate monitoring devices that continuously monitor and record the gas pressure drop across each scrubber and scrubbing liquid flow rate to each scrubber according to the procedures in the operations, maintenance, and monitoring plan. The pressure drop monitor is to be certified by its manufacturer to be accurate within ±250 pascals (±1 inch water gauge) over its operating range, and the flow rate monitor is to be certified by its manufacturer to be accurate within ±5 percent over its operating range. The owner or operator must also continuously monitor and record the feed rate of any chemical(s) added to the scrubbing liquid.

(i)(1) The owner or operator who uses process modifications to control formaldehyde emissions must establish a correlation between formaldehyde emissions and a process parameter(s) to be monitored.

(2) The owner or operator must monitor the established parameter(s) according to the procedures in the operations, maintenance, and monitoring plan.

(3)The owner or operator must include as part of their operations, maintenance, and monitoring plan the following information:

(i) Procedures for the proper operation and maintenance of the process;

(ii) Process parameter(s) to be monitored to demonstrate compliance with the applicable emission limits in § 63.1382. Examples of process parameters include LOI, binder solids content, and binder application rate;

(iii) Correlation(s) between process parameter(s) to be monitored and formaldehyde emissions;

(iv) A schedule for monitoring the process parameter(s); and

(v) Recordkeeping procedures, consistent with the recordkeeping requirements of § 63.1386, to show that the process parameter value(s) established during the performance test is not exceeded.

(j) The owner or operator must monitor and record the free-formaldehyde content of each resin shipment received and used in the formulation of binder.

(k) The owner or operator must monitor and record the formulation of each batch of binder used.

(l) The owner or operator must monitor and record at least once every 8 hours, the product LOI and product density of each bonded wool fiberglass product manufactured.

(m) For all control device and process operating parameters measured during the initial performance tests, the owners or operators of glass-melting furnaces, rotary spin manufacturing lines or flame attenuation manufacturing lines subject to this subpart may change the limits established during the initial performance tests if additional performance testing is conducted to verify that, at the new control device or process parameter levels, they comply with the applicable emission limits in § 63.1382. The owner or operator shall conduct all additional performance tests according to the procedures in this part 63, subpart A and in § 63.1384.

§ 63.1384 Performance test requirements.

(a) The owner or operator subject to the provisions of this subpart shall conduct a performance test to demonstrate compliance with the applicable emission limits in § 63.1382. Compliance is demonstrated when the emission rate of the pollutant is equal to or less than each of the applicable emission limits in § 63.1382. The owner or operator shall conduct the performance test according to the procedures in 40 CFR part 63, subpart A and in this section.

(1) All monitoring systems and equipment must be installed, operational, and calibrated prior to the performance test.

(2) Unless a different frequency is specified in this section, the owner or operator must monitor and record process and/or add-on control device parameters at least every 15 minutes during the performance tests. The arithmetic average for each parameter must be calculated using all of the recorded measurements for the parameter.

(3) During each performance test, the owner or operator must monitor and record the glass pull rate for each glass-melting furnace and, if different, the glass pull rate for each rotary spin manufacturing line and flame attenuation manufacturing line. Record the glass pull rate every 15 minutes during any performance test required by this subpart and determine the arithmetic average of the recorded measurements for each test run and calculate the average of the three test runs.

(4) The owner or operator shall conduct a performance test for each existing and new glass-melting furnace.

(5) During the performance test, the owner or operator of a glass-melting furnace controlled by an ESP shall monitor and record the ESP parameter level(s), as specified in the operations, maintenance, and monitoring plan, and establish the minimum and/or maximum value(s) that will be used to demonstrate compliance after the initial performance test.

(6) During the performance test, the owner or operator of a cold top electric furnace that is not equipped with an add-on control device for PM emissions control, must monitor and record the temperature 46 to 61 centimeters (18 to 24 inches) above the molten glass surface to ensure that the maximum temperature does not exceed 120 °C (250 °F).

(7) During the performance test, the owner or operator of a glass melting furnace (other than a cold top electric furnace) that is not equipped with an add-on control device for PM emissions control, must monitor and record the furnace parameter level, and establish the minimum and/or maximum value(s) that will be used to demonstrate compliance after the initial performance test.

(8) The owner or operator must conduct a performance test for each rotary spin manufacturing line, subject to this subpart, while producing the building insulation with the highest LOI expected to be produced on that line; and for each flame attenuation manufacturing line, subject to this subpart, while producing the heavy-density product or pipe product with the highest LOI expected to be produced on the affected line.

(9) The owner or operator of each rotary spin manufacturing line and flame attenuation manufacturing line regulated by this subpart must conduct performance tests using the resin with the highest free-formaldehyde content. During the performance test of each rotary spin manufacturing line and flame attenuation manufacturing line regulated by this subpart, the owner or operator shall monitor and record the free-formaldehyde content of the resin, the binder formulation used, and the product LOI and density.

(10) During the performance test, the owner or operator of a rotary spin manufacturing line or flame attenuation manufacturing line who plans to use process modifications to comply with the emission limits in § 63.1382 must monitor and record the process parameter level(s), as specified in the operations, maintenance, and monitoring plan, which will be used to demonstrate compliance after the initial performance test.

(11) During the performance test, the owner or operator of a rotary spin manufacturing line or flame attenuation manufacturing line who plans to use a wet scrubbing control device to comply with the emission limits in § 63.1382 must continuously monitor and record the pressure drop across the scrubber, the scrubbing liquid flow rate, and addition of any chemical to the scrubber, including the chemical feed rate, and establish the minimum and/or maximum value(s) that will be used to determine compliance after the initial performance test.

(12) During the performance test, the owner or operator of a rotary spin manufacturing line or affected flame attenuation manufacturing line shall continuously record the operating temperature of each incinerator and record the average during each 1-hour test; the average operating temperature of the three 1-hour tests shall be used to monitor compliance.

(13) Unless disapproved by the Administrator, an owner or operator of a rotary spin or flame attenuation manufacturing line regulated by this subpart may conduct short-term experimental production runs using binder formulations or other process modifications where the process parameter values would be outside those established during performance tests without first conducting performance tests. Such runs must not exceed 1 week in duration unless the Administrator approves a longer period. The owner or operator must notify the Administrator and postmark or deliver the notification at least 15 days prior to commencement of the short-term experimental production runs. The Administrator must inform the owner or operator of a decision to disapprove or must request additional information prior to the date of the short-term experimental production runs. Notification of intent to perform an experimental short-term production run shall include the following information:

(i) The purpose of the experimental production run;

(ii) The affected line;

(iii) How the established process parameters will deviate from previously approved levels;

(iv) The duration of the experimental production run;

(v) The date and time of the experimental production run; and

(vi) A description of any emission testing to be performed during the experimental production run.

(b) To determine compliance with the PM emission limit for glass-melting furnaces, use the following equation:

$$E = \frac{C \times Q \times K_1}{P} \qquad \text{(Eq. 1)}$$

Where:

E = Emission rate of PM, kg/Mg (lb/ton) of glass pulled;

C = Concentration of PM, g/dscm (gr/dscf);

Q = Volumetric flow rate of exhaust gases, dscm/h (dscf/h);

K_1 = Conversion factor, 1 kg/1,000 g (1 lb/7,000 gr); and

P = Average glass pull rate, Mg/h (tons/h).

(c) To determine compliance with the emission limit for formaldehyde for rotary spin manufacturing lines and flame attenuation forming processes, use the following equation:

$$E = \frac{C \times MW \times Q \times K_1 \times K_2}{K_3 \times P \times 10^6} \qquad \text{(Eq. 2)}$$

Where:

E = Emission rate of formaldehyde, kg/Mg (lb/ton) of glass pulled;

C = Measured volume fraction of formaldehyde, ppm;

MW = Molecular weight of formaldehyde, 30.03 g/g-mol;

Q = Volumetric flow rate of exhaust gases, dscm/h (dscf/h);

K_1 = Conversion factor, 1 kg/1,000 g (1 lb/453.6 g);

K_2 = Conversion factor, 1,000 L/m^3 (28.3 L/ft^3);

K_3 = Conversion factor, 24.45 L/g-mol; and

P = Average glass pull rate, Mg/h (tons/h).

§ 63.1385 Test methods and procedures.

(a) The owner or operator shall use the following methods to determine compliance with the applicable emission limits:

(1) Method 1 (40 CFR part 60, appendix A) for the selection of the sampling port location and number of sampling ports;

(2) Method 2 (40 CFR part 60, appendix A) for volumetric flow rate;

(3) Method 3 or 3A (40 CFR part 60, appendix A) for O_2 and CO_2 for diluent measurements needed to correct the concentration measurements to a standard basis;

(4) Method 4 (40 CFR part 60, appendix A) for moisture content of the stack gas;

(5) Method 5 (40 CFR part 60, appendix A) for the concentration of PM. Each run shall consist of a minimum run time of 2 hours and a minimum sample volume of 60 dry standard cubic feet (dscf). The probe

and filter holder heating system may be set to provide a gas temperature no greater than 177 ±14 °C (350 ±25 °F);

(6) Method 316 or Method 318 (appendix A of this part) for the concentration of formaldehyde. Each run shall consist of a minimum run time of 1 hour;

(7) Method contained in appendix A of this subpart for the determination of product LOI;

(8) Method contained in appendix B of this subpart for the determination of the free-formaldehyde content of resin;

(9) Method contained in appendix C of this subpart for the determination of product density;

(10) An alternative method, subject to approval by the Administrator.

(b) Each performance test shall consist of 3 runs. The owner or operator shall use the average of the three runs in the applicable equation for determining compliance.

§ 63.1386 Notification, recordkeeping, and reporting requirements.

(a) *Notifications.* As required by § 63.9(b) through (h) of this part, the owner or operator shall submit the following written initial notifications to the Administrator:

(1) Notification for an area source that subsequently increases its emissions such that the source is a major source subject to the standard;

(2) Notification that a source is subject to the standard, where the initial startup is before June 14, 2002.

(3) Notification that a source is subject to the standard, where the source is new or has been reconstructed, the initial startup is after June 14, 2002, and for which an application for approval of construction or reconstruction is not required;

(4) Notification of intention to construct a new major source or reconstruct a major source; of the date construction or reconstruction commenced; of the anticipated date of startup; of the actual date of startup, where the initial startup of a new or reconstructed source occurs after June 14, 2002, and for which an application for approval or construction or reconstruction is required (See § 63.9(b)(4) and (5) of this part);

(5) Notification of special compliance obligations;

(6) Notification of performance test; and (7) Notification of compliance status.

(b) *Performance test report.* As required by § 63.10(d)(2) of the general provisions, the owner or operator shall report the results of the initial performance test as part of the notification of compliance status required in paragraph (a)(7) of this section.

(c) *Startup, shutdown, and malfunction plan and reports.* (1) The owner or operator shall develop and implement a written plan as described in § 63.6(e)(3) of this part that contains specific procedures to be followed for operating the source and maintaining the source during periods of startup, shutdown, and malfunction and a program of corrective action for malfunctioning process modifications and control systems used to comply with the standard. In addition to the information required in § 63.6(e)(3), the plan shall include:

(i) Procedures to determine and record the cause of the malfunction and the time the malfunction began and ended;

(ii) Corrective actions to be taken in the event of a malfunction of a control device or process modification, including procedures for recording the actions taken to correct the malfunction or minimize emissions; and

(iii) A maintenance schedule for each control device and process modification that is consistent with the manufacturer's instructions and recommendations for routine and long-term maintenance.

(2) The owner or operator shall also keep records of each event as required by § 63.10(b) of this part and record and report if an action taken during a startup, shutdown, or malfunction is not consistent with the procedures in the plan as described in § 63.10(e)(3)(iv) of this part.

(d) *Recordkeeping.* (1) As required by § 63.10(b) of this part, the owner or operator shall maintain files of all information (including all reports and notifications) required by the general provisions and this subpart:

(i) The owner or operator must retain each record for at least 5 years following the date of each occurrence, measurement, maintenance, corrective action, report, or record. The most recent 2 years of records must be retained at the facility. The remaining 3 years of records may be retained off site;

(ii) The owner or operator may retain records on microfilm, on a computer, on computer disks, on magnetic tape, or on microfiche; and

(iii) The owner or operator may report required information on paper or on a labeled computer disk using commonly available and EPA-compatible computer software.

(2) In addition to the general records required by § 63.10(b)(2) of this part, the owner or operator shall maintain records of the following information:

(i) Any bag leak detection system alarms, including the date and time of the alarm, when corrective actions were initiated, the cause of the alarm, an explanation of the corrective actions taken, and when the cause of the alarm was corrected;

(ii) ESP parameter value(s) used to monitor ESP performance, including any period when the value(s) deviated from the established limit(s), the date and time of the deviation, when corrective actions were initiated, the cause of the deviation, an explanation of the corrective actions taken, and when the cause of the deviation was corrected;

(iii) Air temperature above the molten glass in an uncontrolled cold top electric furnace, including any period when the temperature exceeded 120 °C (250 °F) at a location 46 to 61 centimeters (18 to 24 inches) above the molten glass surface, the date and time of the exceedance, when corrective actions were initiated, the cause of the exceedance, an explanation of the corrective actions taken, and when the cause of the exceedance was corrected;

(iv) Uncontrolled glass-melting furnace (that is not a cold top electric furnace) parameter value(s) used to monitor furnace performance, including any period when the value(s) exceeded the established limit(s), the date and time of the exceedance, when corrective actions were initiated, the cause of the exceedance, an explanation of the corrective actions taken, and when the cause of the exceedance was corrected;

(v) The formulation of each binder batch and the LOI and density for each product manufactured on a rotary spin manufacturing line or flame attenuation manufacturing line subject to the provisions of this subpart, and the free formaldehyde content of each resin shipment received and used in the binder formulation;

(vi) Process parameter level(s) for RS and FA manufacturing lines that use process modifications to comply with the emission limits, including any period when the parameter level(s) deviated from the established limit(s), the date and time of the deviation, when corrective actions were initiated, the cause of the deviation, an explanation of the corrective actions taken, and when the cause of the deviation was corrected;

(vii) Scrubber pressure drop, scrubbing liquid flow rate, and any chemical additive (including chemical feed rate to the scrubber), including any period when a parameter level(s) deviated from the established limit(s), the date and time of the deviation, when corrective actions were initiated, the cause of the deviation, an explanation of

the corrective actions taken, and when the cause of the deviation was corrected;

(viii) Incinerator operating temperature and results of periodic inspection of incinerator components, including any period when the temperature fell below the established average or the inspection identified problems with the incinerator, the date and time of the problem, when corrective actions were initiated, the cause of the problem, an explanation of the corrective actions taken, and when the cause of the problem was corrected;

(ix) Glass pull rate, including any period when the pull rate exceeded the average pull rate established during the performance test by more than 20 percent, the date and time of the exceedance, when corrective actions were initiated, the cause of the exceedance, an explanation of the corrective actions taken, and when the cause of the exceedance was corrected.

(e) *Excess emissions report.* As required by § 63.10(e)(3)(v) of this part, the owner or operator shall report semiannually if measured emissions are in excess of the applicable standard or a monitored parameter deviates from the levels established during the performance test. The report shall contain the information specified in § 63.10(c) of this part as well as the additional records required by the recordkeeping requirements of paragraph (d) of this section. When no deviations have occurred, the owner or operator shall submit a report stating that no excess emissions occurred during the reporting period.

§ 63.1387 Compliance dates.

(a) *Compliance dates.* The owner or operator subject to the provisions of this subpart shall demonstrate compliance with the requirements of this subpart by no later than:

(1) June 14, 2002, for an existing glass-melting furnace, rotary spin manufacturing line, or flame attenuation manufacturing line; or

(2) Upon startup for a new glass-melting furnace, rotary spin manufacturing line, or flame attenuation manufacturing line.

(b) *Compliance extension.* The owner or operator of an existing source subject to this subpart may request from the Administrator an extension of the compliance date for the emission standards for one additional year if such additional period is necessary for the installation of controls. The owner or operator shall submit a request for an extension according to the procedures in § 63.6(i)(3) of this part.

§§ 63.1388—63.1399 [Reserved]

TABLE 1 TO SUBPART NNN OF PART 63.—APPLICABILITY OF GENERAL PROVISIONS (40 CFR PART 63, SUBPART A) TO SUBPART NNN

General provisions citation	Requirement	Applies to subpart NNN	Explanation
63.1(a)(1)–(a)(4)	Applicability	Yes.	
63.1(a)(5)		No	[Reserved].
63.1(a)(6)–(a)(8)		Yes.	
63.1(a)(9)		No	[Reserved].
63.1(a)(10)–(a)(14)		Yes.	
63.1(b)(1)–(b)(3)	Initial Applicability Determination	Yes.	
63.1(c)(1)–(c)(2)	Applicability After Standard Established.	Yes.	
63.1(c)(3)		No	[Reserved].
63.1(c)(4)–(c)(5)		Yes.	
63.1(d)		No	[Reserved].
63.1(e)	Applicability of Permit Program	Yes.	
63.2	Definitions	Yes	Additional definitions in § 63.1381.
63.3(a)–(c)	Units and Abbreviations	Yes.	
63.4(a)(1)–(a)(3)	Prohibited Activities	Yes.	
63.4(a)(4)		No	[Reserved].
63.4(a)(5)		Yes.	
63.4(b)–(c)		Yes.	
63.5(a)(1)–(a)(2)	Construction/Reconstruction	Yes.	
63.5(b)(1)	Existing, New, Reconstructed	Yes.	
63.5(b)(2)		No	[Reserved].
63.5(b)(3)–(b)(6)		Yes.	
63.5(c)		No	[Reserved].
63.5(d)	Approval of Construction/Reconstruction.	Yes.	
63.5(e)		Yes.	
63.5(f)		Yes.	
63.6(a)	Compliance with Standards and Maintenance Requirements.	Yes.	
63.6(b)(1)–(b)(5)		Yes.	
63.6(b)(6)		No	[Reserved].
63.6(b)(7)		Yes.	
63.6(c)(1)	Compliance Date for Existing Sources.	Yes	§ 63.1387 specifies compliance dates.
63.6(c)(2)		Yes.	
63.6(c)(3)–(c)(4)		No	[Reserved].
63.6(c)(5)		Yes.	
63.6(d)		No	[Reserved].
63.6(e)(1)–(e)(2)	Operation & Maintenance	Yes	§ 63.1383 specifies operations/maintenance plan.
63.6(e)(3)	Startup, Shutdown Malfunction Plan.	Yes.	
63.6(f)(1)–(f)(3)	Compliance with Nonopacity Emission Standards.	Yes.	

TABLE 1 TO SUBPART NNN OF PART 63.—APPLICABILITY OF GENERAL PROVISIONS (40 CFR PART 63, SUBPART A) TO SUBPART NNN—Continued

General provisions citation	Requirement	Applies to subpart NNN	Explanation
63.6(g)(1)–(g)(3)	Alternative Nonopacity Standard	Yes.	
63.6(h)	Opacity/VE Standards	No	Subpart NNN-no COMS, VE or opacity standards.
63.6(i)(1)–(i)(14)	Extension of Compliance	Yes.	
63.6(i)(15)		No	[Reserved].
63.6(i)(16)		Yes.	
63.6(j)	Exemption from Compliance	Yes.	
63.7(a)	Performance Testing Requirements.	Yes	§ 63.1384 has specific requirements.
63.7(b)	Notification	Yes.	
63.7(c)	Quality Assurance Program/Test Plan.	Yes.	
63.7(d)	Performance Testing Facilities	Yes.	
63.7(e)(1)–(e)(4)	Conduct of Performance Tests	Yes.	
63.7(f)	Alternative Test Method	Yes.	
63.7(g)	Data Analysis	Yes.	
63.7(h)	Waiver of Performance Tests	Yes.	
63.8(a)(1)–(a)(2)	Monitoring Requirements	Yes.	
63.8(a)(3)		No	[Reserved].
63.8(a)(4)		Yes.	
63.8(b)	Conduct of Monitoring	Yes.	
63.8(c)	CMS Operation/Maintenance	Yes.	
63.8(d)	Quality Control Program	Yes.	
63.8(e)	Performance Evaluation for CMS	Yes.	
63.8(f)	Alternative Monitoring Method	Yes.	
63.8(g)	Reduction of Monitoring Data	Yes.	
63.9(a)	Notification Requirements	Yes.	
63.9(b)	Initial Notifications	Yes.	
63.9(c)	Request for Compliance Extension.	Yes.	
63.9(d)	New Source Notification for Special Compliance Requirements.	Yes.	
63.9(e)	Notification of Performance Test	Yes.	
63.9(f)	Notification of VE/Opacity Test	No	Opacity/VE tests not required.
63.9(g)	Additional CMS Notifications	Yes.	
63.9(h)(1)–(h)(3)	Notification of Compliance Status	Yes.	
63.9(h)(4)		No	[Reserved].
63.9(h)(5)–(h)(6)		Yes.	
63.9(i)	Adjustment of Deadlines	Yes.	
63.9(j)	Change in Previous Information	Yes.	
63.10(a)	Recordkeeping/Reporting	Yes.	
63.10(b)	General Requirements	Yes.	
63.10(c)(1)	Additional CMS Recordkeeping	Yes.	
63.10(c)(2)–(c)(4)		No	[Reserved].
63.10(c)(5)–(c)(8)		Yes.	
63.10(c)(9)		No	[Reserved].
63.10(c)(10)–(15)		Yes.	
63.10(d)(1)	General Reporting Requirements	Yes.	
63.10(d)(2)	Performance Test Results	Yes.	
63.10(d)(3)	Opacity or VE Observations	No	No limits for VE/opacity.
63.10(d)(4)	Progress Reports	Yes.	
63.10(d)(5)	Startup, Shutdown, Malfunction Reports.	Yes.	
63.10(e)(1)–(e)(3)	Additional CMS Reports	Yes.	
63.10(e)(4)	Reporting COM Data	No	COM not required.
63.10(f)	Waiver of Recordkeeping/Reporting.	Yes.	
63.11(a)	Control Device Requirements	Yes.	
63.11(b)	Flares	No	Flares not applicable.
63.12	State Authority and Delegations	Yes.	
63.13	State/Regional Addresses	Yes.	
63.14	Incorporation by Reference	No.	
63.15	Availability of Information	Yes.	

Appendix A to Subpart NNN of Part 63—Method for the Determination of LOI

1. Purpose

The purpose of this test is to determine the LOI of cured blanket insulation. The method is applicable to all cured board and blanket products.

2. Equipment

2.1 Scale sensitive to 0.1 gram.

2.2 Furnace designed to heat to at least 540 °C (1,000 °F) and controllable to ±10 °C (50 °F).

2.3 Wire tray for holding specimen while in furnace.

3. Procedure

3.1 Cut a strip along the entire width of the product that will weigh at least 10.0 grams. Sample should be free of dirt or foreign matter.

Note: Remove all facing from sample.

3.2 Cut the sample into pieces approximately 12 inches long, weigh to the nearest 0.1 gram and record. Place in wire tray. Sample should not be compressed or overhang on tray edges.

Note: On air duct products, remove shiplaps and overspray.

3.3 Place specimen in furnace at 540 °C (1,000 °F), ±10 °C (50 °F) for 15 to 20 minutes to insure complete oxidation. After ignition, fibers should be white and should not be fused together.

3.4 Remove specimen from the furnace and cool to room temperature.

3.5 Weigh cooled specimen and wire tray to the nearest 0.1 gram. Deduct the weight of the wire tray and then calculate the loss in weight as a percent of the original specimen weight.

Appendix B to Subpart NNN of Part 63—Free Formaldehyde Analysis of Insulation Resins by Hydroxylamine Hydrochloride

1. Scope

This method was specifically developed for water-soluble phenolic resins that have a relatively high free-formaldehyde (FF) content such as insulation resins. It may also be suitable for other phenolic resins, especially those with a high FF content.

2. Principle

2.1 a. The basis for this method is the titration of the hydrochloric acid that is liberated when hydroxylamine hydrochloride reacts with formaldehyde to form formaldoxine:

$$HCHO + NH_2OH{:}HCl \rightarrow CH_2{:}NOH + H_2O + HCl$$

b. Free formaldehyde in phenolic resins is present as monomeric formaldehyde, hemiformals, polyoxymethylene hemiformals, and polyoxymethylene glycols. Monomeric formaldehyde and hemiformals react rapidly with hydroxylamine hydrochloride, but the polymeric forms of formaldehyde must hydrolyze to the monomeric state before they can react. The greater the concentration of free formaldehyde in a resin, the more of that formaldehyde will be in the polymeric form. The hydrolysis of these polymers is catalyzed by hydrogen ions.

2.2 The resin sample being analyzed must contain enough free formaldehyde so that the initial reaction with hydroxylamine hydrochloride will produce sufficient hydrogen ions to catalyze the depolymerization of the polymeric formaldehyde within the time limits of the test method. The sample should contain approximately 0.3 grams free formaldehyde to ensure complete reaction within 5 minutes.

3. Apparatus

3.1 Balance, readable to 0.01 g or better.

3.2 pH meter, standardized to pH 4.0 with pH 4.0 buffer and pH 7 with pH 7.0 buffer.

3.3 50-mL burette for 1.0 N sodium hydroxide.

3.4 Magnetic stirrer and stir bars.

3.5 250-mL beaker.

3.6 50-mL graduated cylinder.

3.7 100-mL graduated cylinder.

3.8 Timer.

4. Reagents

4.1 Standardized 1.0 N sodium hydroxide solution.

4.2 Hydroxylamine hydrochloride solution, 100 grams per liter, pH adjusted to 4.00.

4.3 Hydrochloric acid solution, 1.0 N and 0.1 N.

4.4 Sodium hydroxide solution, 0.1 N.

4.5 50/50 v/v mixture of distilled water and methyl alcohol.

5. Procedure

5.1 Determine the sample size as follows:

a. If the expected FF is greater than 2 percent, go to Part A to determine sample size.

b. If the expected FF is less than 2 percent, go to Part B to determine sample size.

c. Part A: Expected FF ≥ 2 percent.

Grams resin = 60/expected percent FF

i. The following table shows example levels:

Expected % free formaldehyde	Sample size, grams
2	30.0
5	12.0
8	7.5
10	6.0
12	5.0
15	4.0

ii. It is very important to the accuracy of the results that the sample size be chosen correctly. If the milliliters of titrant are less than 15 mL or greater than 30 mL, reestimate the needed sample size and repeat the tests.

d. Part B: Expected FF < 2 percent

Grams resin = 30/expected percent FF

i. The following table shows example levels:

Expected % free formaldehyde	Sample size, grams
2	15
1	30
0.5	60

ii. If the milliliters of titrant are less than 5 mL or greater than 30 mL, reestimate the needed sample size and repeat the tests.

5.2 Weigh the resin sample to the nearest 0.01 grams into a 250-mL beaker. Record sample weight.

5.3 Add 100 mL of the methanol/water mixture and stir on a magnetic stirrer. Confirm that the resin has dissolved.

5.4 Adjust the resin/solvent solution to pH 4.0, using the prestandardized pH meter, 1.0 N hydrochloric acid, 0.1 N hydrochloric acid, and 0.1 N sodium hydroxide.

5.5 Add 50 mL of the hydroxylamine hydrochloride solution, measured with a graduated cylinder. Start the timer.

5.6 Stir for 5 minutes. Titrate to pH 4.0 with standardized 1.0 N sodium hydroxide. Record the milliliters of titrant and the normality.

6. Calculations

$$\% \text{ FF} = \frac{\text{mL sodium hydroxide} \times \text{normality} \times 3.003}{\text{grams of sample}}$$

7. Method Precision and Accuracy

Test values should conform to the following statistical precision:

Variance = 0.005

Standard deviation = 0.07

95% Confidence Interval, for a single determination = 0.2

8. Author

This method was prepared by K. K. Tutin and M. L. Foster, Tacoma R&D Laboratory, Georgia-Pacific Resins, Inc. (Principle written by R. R. Conner.)

9. References

9.1 GPAM 2221.2.

9.2 PR&C TM 2.035.

9.3 Project Report, Comparison of Free Formaldehyde Procedures, January 1990, K. K. Tutin.

Appendix C to Subpart NNN of Part 63—Method for the Determination of Product Density

1. Purpose

The purpose of this test is to determine the product density of cured blanket insulation. The method is applicable to all cured board and blanket products.

2. Equipment

One square foot (12 in. by 12 in.) template, or templates that are multiples of one square foot, for use in cutting insulation samples.

3. Procedure

3.1 Obtain a sample at least 30 in. long across the machine width. Sample should be free of dirt or foreign matter.

3.2 Lay out the cutting pattern according to the plant's written procedure for the designated product.

3.2 Cut samples using one square foot (or multiples of one square foot) template.

3.3 Weigh product and obtain area weight (lb/ft^2).

3.4 Measure sample thickness.

3.5 Calculate the product density:

Density (lb/ft^3) = area weight (lb/ft^2)/ thickness (ft)

5. Appendix A to part 63 is amended by adding in numerical order methods 316 and 318 to read as follows:

Appendix A To Part 63—Test Methods

* * * * *

Method 316—Sampling and Analysis for Formaldehyde Emissions From Stationary Sources in the Mineral Wool and Wool Fiberglass Industries

1.0 *Introduction*

This method is applicable to the determination of formaldehyde, CAS Registry number 50–00–0, from stationary sources in the mineral wool and wool fiber glass industries. High purity water is used to collect the formaldehyde. The formaldehyde concentrations in the stack samples are determined using the modified pararosaniline method. Formaldehyde can be detected as low as 8.8×10^{10} lbs/cu ft (11.3 ppbv) or as high as 1.8×10^{3} lbs/cu ft (23,000,000 ppbv), at standard conditions over a 1 hour sampling period, sampling approximately 30 cu ft.

2.0 *Summary of Method*

Gaseous and particulate pollutants are withdrawn isokinetically from an emission source and are collected in high purity water. Formaldehyde present in the emissions is highly soluble in high purity water. The high purity water containing formaldehyde is then analyzed using the modified pararosaniline method. Formaldehyde in the sample reacts with acidic pararosaniline, and the sodium sulfite, forming a purple chromophore. The intensity of the purple color, measured spectrophotometrically, provides an accurate and precise measure of the formaldehyde concentration in the sample.

3.0 *Definitions*

See the definitions in the General Provisions of this Subpart.

4.0 *Interferences*

Sulfite and cyanide in solution interfere with the pararosaniline method. A procedure to overcome the interference by each compound has been described by Miksch, et al.

5.0 *Safety.* (Reserved)

6.0 *Apparatus and Materials*

6.1 A schematic of the sampling train is shown in Figure 1. This sampling train configuration is adapted from EPA Method 5, 40 CFR part 60, appendix A, procedures.

BILLING CODE 6560–50–P

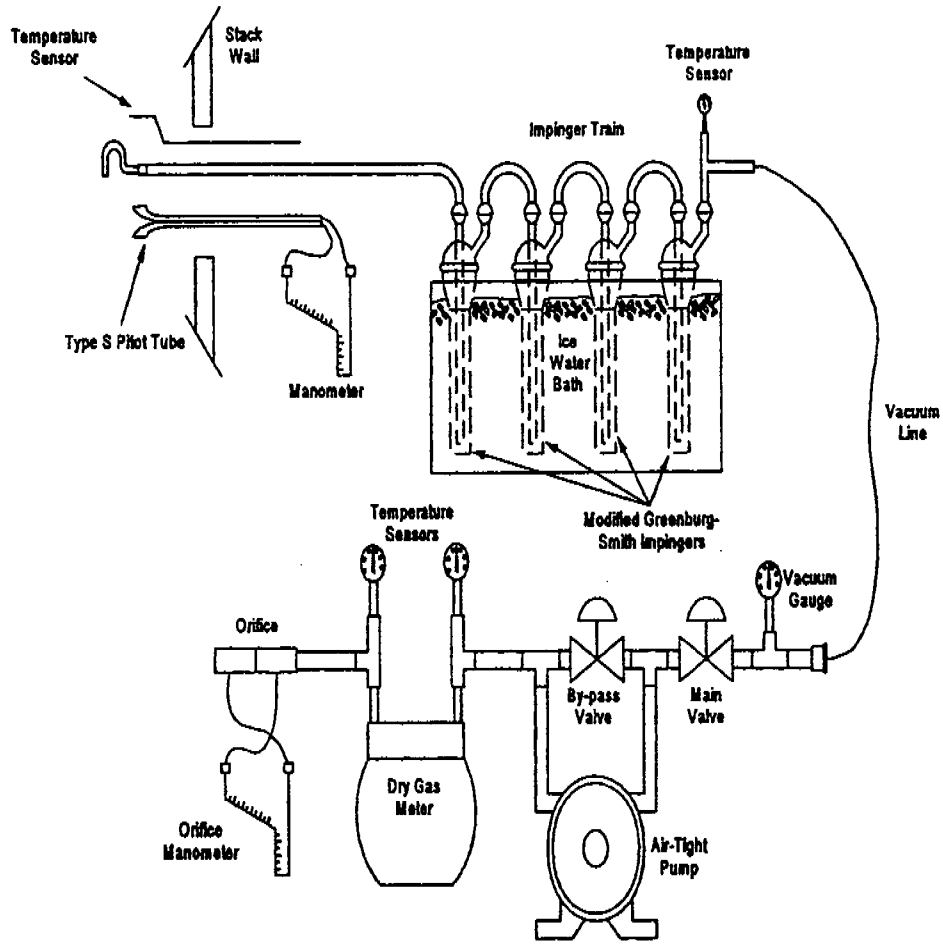

Figure 1. Sampling Train.

The sampling train consists of the following components: probe nozzle, probe liner, pitot tube, differential pressure gauge, impingers, metering system, barometer, and gas density determination equipment.

6.1.1 Probe Nozzle: Quartz, glass, or stainless steel with sharp, tapered (30° angle) leading edge. The taper shall be on the outside to preserve a constant inner diameter. The nozzle shall be buttonhook or elbow design. A range of nozzle sizes suitable for isokinetic sampling should be available in increments of 0.15 cm (1/16 in), e.g., 0.32 to 1.27 cm (1/8 to 1/2 in) or larger if higher volume sampling trains are used. Each nozzle shall be calibrated according to the procedure outlined in Section 10.1.

6.1.2 Probe Liner: Borosilicate glass or quartz shall be used for the probe liner. The probe shall be maintained at a temperature of 120°C ± 14°C (248°F ± 25°F).

6.1.3 Pitot Tube: The pitot tube shall be Type S, as described in Section 2.1 of EPA Method 2, 40 CFR part 60, appendix A, or any other appropriate device. The pitot tube shall be attached to the probe to allow constant monitoring of the stack gas velocity. The impact (high pressure) opening plane of the pitot tube shall be even with or above the nozzle entry plane (see Figure 2-6b, EPA Method 2, 40 CFR part 60, appendix A) during sampling. The Type S pitot tube assembly shall have a known coefficient, determined as outlined in Section 4 of EPA Method 2, 40 CFR part 60, appendix A.

6.1.4 Differential Pressure Gauge: The differential pressure gauge shall be an inclined manometer or equivalent device as described in Section 2.2 of EPA Method 2, 40 CFR part 60, appendix A. One manometer shall be used for velocity-head reading and the other for orifice differential pressure readings.

6.1.5 Impingers: The sampling train requires a minimum of four impingers, connected as shown in Figure 1, with ground glass (or equivalent) vacuum-tight fittings. For the first, third, and fourth impingers, use the Greenburg-Smith design, modified by replacing the tip with a 1.3 cm inside diameters (1/2 in) glass tube extending to 1.3 cm (1/2 in) from the bottom of the flask. For the second impinger, use a Greenburg-Smith impinger with the standard tip. Place a thermometer capable of measuring temperature to within 1°C (2°F) at the outlet of the fourth impinger for monitoring purposes.

6.1.6 Metering System: The necessary components are a vacuum gauge, leak-free pump, thermometers capable of measuring temperatures within 3°C (5.4°F), dry-gas meter capable of measuring volume to within 1 percent, and related equipment as shown in Figure 1. At a minimum, the pump should be capable of 4 cfm free flow, and the dry gas meter should have a recording capacity of 0-999.9 cu ft with a resolution of 0.005 cu ft. Other metering systems may be used which are capable of maintaining sample volumes to within 2 percent. The metering system may be used in conjunction with a pitot tube to enable checks of isokinetic sampling rates.

6.1.7 Barometer: The barometer may be mercury, aneroid, or other barometer capable of measuring atmospheric pressure to within 2.5 mm Hg (0.1 in Hg). In many cases, the barometric reading may be obtained from a nearby National Weather Service Station, in which case the station value (which is the absolute barometric pressure) is requested and an adjustment for elevation differences between the weather station and sampling point is applied at a rate of minus 2.5 mm Hg (0.1 in Hg) per 30 m (100 ft) elevation increase (rate is plus 2.5 mm Hg per 30 m (100 ft) of elevation decrease).

6.1.8 Gas Density Determination Equipment: Temperature sensor and pressure gauge (as described in Sections 2.3 and 2.3 of EPA Method 2, 40 CFR part 60, appendix A), and gas analyzer, if necessary (as described in EPA Method 3, 40 CFR part 60, appendix A). The temperature sensor ideally should be permanently attached to the pitot tube or sampling probe in a fixed configuration such that the top of the sensor extends beyond the leading edge of the probe sheath and does not touch any metal. Alternatively, the sensor may be attached just prior to use in the field. Note, however, that if the temperature sensor is attached in the field, the sensor must be placed in an interference-free arrangement with respect to the Type S pitot openings (see Figure 2-7, EPA Method 2, 40 CFR part 60, appendix A). As a second alternative, if a difference of no more than 1 percent in the average velocity measurement is to be introduced, the temperature gauge need not be attached to the probe or pitot tube.

6.2 Sample Recovery

6.2.1 Probe Liner: Probe nozzle and brushes; bristle brushes with stainless steel wire handles are required. The probe brush shall have extensions of stainless steel, Teflon™, or inert material at least as long as the probe. The brushes shall be properly sized and shaped to brush out the probe liner, the probe nozzle, and the impingers.

6.2.2 Wash Bottles: One wash bottle is required. Polyethylene, Teflon™, or glass wash bottles may be used for sample recovery.

6.2.3 Graduated Cylinder and/or Balance: A graduated cylinder or balance is required to measure condensed water to the nearest 1 ml or 1 g. Graduated cylinders shall have division not >2 ml. Laboratory balances capable of weighing to ± 0.5 g are required.

6.2.4 Polyethylene Storage Containers: 500 ml wide-mouth polyethylene bottles are required to store impinger water samples.

6.2.5 Rubber Policeman and Funnel: A rubber policeman and funnel are required to aid the transfer of material into and out of containers in the field.

6.3 Sample Analysis

6.3.1 Spectrophotometer—B&L 70, 710, 2000, etc., or equivalent; 1 cm pathlength cuvette holder.

6.3.2 Disposable polystyrene cuvettes, pathlengh 1 cm, volume of about 4.5 ml.

6.3.3 Pipettors—Fixed-volume Oxford pipet (250 µl; 500 µl; 1000 µl); adjustable volume Oxford or equivalent pipettor 1-5 ml model, set to 2.50 ml.

6.3.4 Pipet tips for pipettors above.

6.3.5 Parafilm, 2" wide; cut into about 1" squares.

7.0 *Reagents*

7.1 High purity water: All references to water in this method refer to high purity water (ASTM Type I water or equivalent). The water purity will dictate the lower limits of formaldehyde quantification.

7.2 Silica Gel: Silica gel shall be indicting type, 6-16 mesh. If the silica gel has been used previously, dry at 175°C (350°F) for 2 hours before using. New silica gel may be used as received. Alternatively, other types of desiccants (equivalent or better) may be used.

7.3 Crushed Ice: Quantities ranging from 10-50 lbs may be necessary during a sampling run, depending upon ambient temperature. Samples which have been taken must be stored and shipped cold; sufficient ice for this purpose must be allowed.

7.4 Quaternary ammonium compound stock solution: Prepare a stock solution of dodecyltrimethylammonium chloride (98 percent minimum assay, reagent grade) by dissolving 1.0 gram in 1000 ml water. This solution contains nominally 1000 µg/ml quaternary ammonium compound, and is used as a biocide for some sources which are prone to microbial contamination.

7.5 Pararosaniline: Weigh 0.16 grams pararosaniline (free base; assay of 95 percent or greater, C.I. 42500; Sigma P7632 has been found to be acceptable) into a 100 ml flask. Exercise care, since pararosaniline is a dye and will stain. Using a wash bottle with high-purity water, rinse the walls of the flask. Add no more than 25 ml water. Then, carefully add 20 ml of concentrated hydrochloric acid to the flask. The flask will become warm after the addition of acid. Add a magnetic stir bar to the flask, cap, and place on a magnetic stirrer for approximately 4 hours. Then, add additional water so the total volume is 100 ml. This solution is stable for several months when stored tightly capped at room temperature.

7.6 Sodium sulfite: Weigh 0.10 grams anhydrous sodium sulfite into a 100 ml flask. Dilute to the mark with high purity water. Invert 15-20 times to mix and dissolve the sodium sulfite. This solution must be prepared fresh every day.

7.7 Formaldehyde standard solution: Pipet exactly 2.70 ml of 37 percent formaldehyde solution into a 1000 ml volumetric flask which contains about 500 ml of high-purity water. Dilute to the mark with high-purity water. This solution contains nominally 1000 µg/ml of formaldehyde, and is used to prepare the working formaldehyde standards. The exact formaldehyde concentration may be determined if needed by suitable modification of the sodium sulfite method (Reference: J.F. Walker, Formaldehyde (Third Edition), 1964.). The 1000 µg/ml formaldehyde stock solution is stable for at least a year if kept tightly closed, with the neck of the flask sealed with Parafilm. Store at room temperature.

7.8 Working formaldehyde standards: Pipet exactly 10.0 ml of the 1000 µg/ml formaldehyde stock solution into a 100 ml volumetric flask which is about half full of high-purity water. Dilute to the mark with high-purity water, and invert 15-20 times to mix thoroughly. This solution contains nominally 100 µg/ml formaldehyde. Prepare

the working standards from this 100 µg/ml standard solution and using the Oxford pipets:

Working standard, µ/mL	µL or 100 µg/mL solution	Volumetric flask volume (dilute to mark with water)
0.250	250	100
0.500	500	100
1.00	1000	100
2.00	2000	100
3.00	1500	50

The 100 µg/ml stock solution is stable for 4 weeks if kept refrigerated between analyses. The working standards (0.25–3.00 µg/ml) should be prepared fresh every day, consistent with good laboratory practice for trace analysis. If the laboratory water is not of sufficient purity, it may be necessary to prepare the working standards every day. The laboratory must establish that the working standards are stable—DO NOT assume that your working standards are stable for more than a day unless you have verified this by actual testing for several series of working standards.

8.0 *Sample Collection*

8.1 Because of the complexity of this method, field personnel should be trained in and experienced with the test procedures in order to obtain reliable results.

8.2 Laboratory Preparation

8.2.1 All the components shall be maintained and calibrated according to the procedure described in APTD–0576, unless otherwise specified.

8.2.2 Weigh several 200 to 300 g portions of silica gel in airtight containers to the nearest 0.5 g. Record on each container the total weight of the silica gel plus containers. As an alternative to preweighing the silica gel, it may instead be weighed directly in the impinger or sampling holder just prior to train assembly.

8.3 Preliminary Field Determinations

8.3.1 Select the sampling site and the minimum number of sampling points according to EPA Method 1, 40 CFR part 60, appendix A, or other relevant criteria. Determine the stack pressure, temperature, and range of velocity heads using EPA Method 2, 40 CFR part 60, appendix A. A leak-check of the pitot lines according to Section 3.1 of EPA Method 2, 40 CFR part 60, appendix A, must be performed. Determine the stack gas moisture content using EPA Approximation Method 4,40 CFR part 60, appendix A, or its alternatives to establish estimates of isokinetic sampling rate settings. Determine the stack gas dry molecular weight, as described in EPA Method 2, 40 CFR part 60, appendix A, Section 3.6. If integrated EPA Method 3, 40 CFR part 60, appendix A, sampling is used for molecular weight determination, the integrated bag sample shall be taken simultaneously with, and for the same total length of time as, the sample run.

8.3.2 Select a nozzle size based on the range of velocity heads so that it is not necessary to change the nozzle size in order to maintain isokinetic sampling rates below 28 l/min (1.0 cfm). During the run do not change the nozzle. Ensure that the proper differential pressure gauge is chosen for the range of velocity heads encountered (see Section 2.2 of EPA Method 2, 40 CFR part 60, appendix A).

8.3.3 Select a suitable probe liner and probe length so that all traverse points can be sampled. For large stacks, to reduce the length of the probe, consider sampling from opposite sides of the stack.

8.3.4 A minimum of 30 cu ft of sample volume is suggested for emission sources with stack concentrations not greater than 23,000,000 ppbv. Additional sample volume shall be collected as necessitated by the capacity of the water reagent and analytical detection limit constraint. Reduced sample volume may be collected as long as the final concentration of formaldehyde in the stack sample is greater than 10 (ten) times the detection limit.

8.3.5 Determine the total length of sampling time needed to obtain the identified minimum volume by comparing the anticipated average sampling rate with the volume requirement. Allocate the same time to all traverse points defined by EPA Method 1, 40 CFR part 60, appendix A. To avoid timekeeping errors, the length of time sampled at each traverse point should be an integer or an integer plus 0.5 min.

8.3.6 In some circumstances (e.g., batch cycles) it may be necessary to sample for shorter times at the traverse points and to obtain smaller gas-volume samples. In these cases, careful documentation must be maintained in order to allow accurate calculations of concentrations.

8.4 Preparation of Collection Train

8.4.1 During preparation and assembly of the sampling train, keep all openings where contamination can occur covered with Teflon™ film or aluminum foil until just prior to assembly or until sampling is about to begin.

8.4.2 Place 100 ml of water in each of the first two impingers, and leave the third impinger empty. If additional capacity is required for high expected concentrations of formaldehyde in the stack gas, 200 ml of water per impinger may be used or additional impingers may be used for sampling. Transfer approximately 200 to 300 g of preweighed silica gel from its container to the fourth impinger. Care should be taken to ensure that the silica gel is not entrained and carried out from the impinger during sampling. Place the silica gel container in a clean place for later use in the sample recovery. Alternatively, the weight of the silica gel plus impinger may be determined to the nearest 0.5 g and recorded.

8.4.3 With a glass or quartz liner, install the selected nozzle using a Viton-A O-ring when stack temperatures are <260°C (500°F) and a woven glass-fiber gasket when temperatures are higher. See APTD–0576 for details. Other connection systems utilizing either 316 stainless steel or Teflon™ ferrules may be used. Mark the probe with heat-resistant tape or by some other method to denote the proper distance into the stack or duct for each sampling point.

8.4.4 Assemble the train as shown in Figure 1. During assembly, a very light coating of silicone grease may be used on ground-glass joints of the impingers, but the silicone grease should be limited to the outer portion (see APTD–0576) of the ground-glass joints to minimize silicone grease contamination. If necessary, Teflon™ tape may be used to seal leaks. Connect all temperature sensors to an appropriate potentiometer/display unit. Check all temperature sensors at ambient temperatures.

8.4.5 Place crushed ice all around the impingers.

8.4.6 Turn on and set the probe heating system at the desired operating temperature. Allow time for the temperature to stabilize.

8.5 Leak-Check Procedures

8.5.1 Pre-test Leak-check: Recommended, but not required. If the tester elects to conduct the pre-test leak-check, the following procedure shall be used.

8.5.1.1 After the sampling train has been assembled, turn on and set probe heating system at the desired operating temperature. Allow time for the temperature to stabilize. If a Viton-a O-ring or other leak-free connection is used in assembling the probe nozzle to the probe liner, leak-check the train at the sampling site by plugging the nozzle and pulling a 381 mm Hg (15 in Hg) vacuum.

Note: A lower vacuum may be used, provided that the lower vacuum is not exceeded during the test.

If a woven glass fiber gasket is used, do not connect the probe to the train during the leak-check. Instead, leak-check the train by first attaching a carbon-filled leak-check impinger to the inlet and then plugging the inlet and pulling a 381 mm Hg (15 in Hg) vacuum. (A lower vacuum may be used if this lower vacuum is not exceeded during the test.) Next connect the probe to the train and leak-check at about 25 mm Hg (1 in Hg) vacuum. Alternatively, leak-check the probe with the rest of the sampling train in one step at 381 mm Hg (15 in Hg) vacuum. Leakage rates in excess of (a) 4 percent of the average sampling rate or (b) 0.00057 m^3/min (0.02 cfm), whichever is less, are unacceptable.

8.5.1.2 The following leak-check instructions for the sampling train described in APTD–0576 and APTD–0581 may be helpful. Start the pump with the fine-adjust valve fully open and coarse-valve completely closed. Partially open the coarse-adjust valve and slowly close the fine-adjust valve until the desired vacuum is reached. Do not reverse direction of the fine-adjust valve, as liquid will back up into the train. If the desired vacuum is exceeded, either perform the leak-check at this higher vacuum or end the leak-check, as described below, and start over.

8.5.1.3 When the leak-check is completed, first slowly remove the plug from the inlet to the probe. When the vacuum drops to 127 mm (5 in) Hg or less, immediately close the coarse-adjust valve. Switch off the pumping system and reopen the fine-adjust valve. Do not reopen the fine-adjust valve until the coarse-adjust valve has been closed to prevent the liquid in the impingers from being forced backward in the sampling line and silica gel from being entrained backward into the third impinger.

8.5.2 Leak-checks During Sampling Run:

8.5.2.1 If, during the sampling run, a component change (e.g., impinger) becomes necessary, a leak-check shall be conducted immediately after the interruption of sampling and before the change is made. The leak-check shall be done according to the procedure described in Section 10.3.3, except that it shall be done at a vacuum greater than or equal to the maximum value recorded up to that point in the test. If the leakage rate is found to be no greater than 0.0057 m^3/min (0.02 cfm) or 4 percent of the average sampling rate (whichever is less), the results are acceptable. If a higher leakage rate is obtained, the tester must void the sampling run.

Note: Any correction of the sample volume by calculation reduces the integrity of the pollutant concentration data generated and must be avoided.

8.5.2.2 Immediately after component changes, leak-checks are optional. If performed, the procedure described in section 8.5.1.1 shall be used.

8.5.3 Post-test Leak-check:

8.5.3.1 A leak-check is mandatory at the conclusion of each sampling run. The leak-check shall be done with the same procedures as the pre-test leak-check, except that the post-test leak-check shall be conducted at a vacuum greater than or equal to the maximum value reached during the sampling run. If the leakage rate is found to be no greater than 0.00057 m^3/min (0.02 cfm) or 4 percent of the average sampling rate (whichever is less), the results are acceptable. If, however, a higher leakage rate is obtained, the tester shall record the leakage rate and void the sampling run.

8.6 Sampling Train Operation

8.6.1 During the sampling run, maintain an isokinetic sampling rate to within 10 percent of true isokinetic, below 28 l/min (1.0 cfm). Maintain a temperature around the probe of 120°C ± 14°C (248° ± 25°F).

8.6.2 For each run, record the data on a data sheet such as the one shown in Figure 2. Be sure to record the initial dry-gas meter reading. Record the dry-gas meter readings at the beginning and end of each sampling time increment, when changes in flow rates are made, before and after each leak-check, and when sampling is halted. Take other readings required by Figure 2 at least once at each sample point during each time increment and additional readings when significant adjustments (20 percent variation in velocity head readings) necessitate additional adjustments in flow rate. Level and zero the manometer. Because the manometer level and zero may drift due to vibrations and temperature changes, make periodic checks during the traverse.

BILLING CODE 6560–50–P

Figure 2 - Formaldehyde Field Data

Plant . . . . . .
Location . . . . . .
Operator . . . . . .
Date . . . . . .
Run No . . . . . .
Sample box No . . . . . .
Meter box No . . . . . .
Meter ΔH . . . . . .
C Factor . . . . . .
Pitot tube coefficient, Op

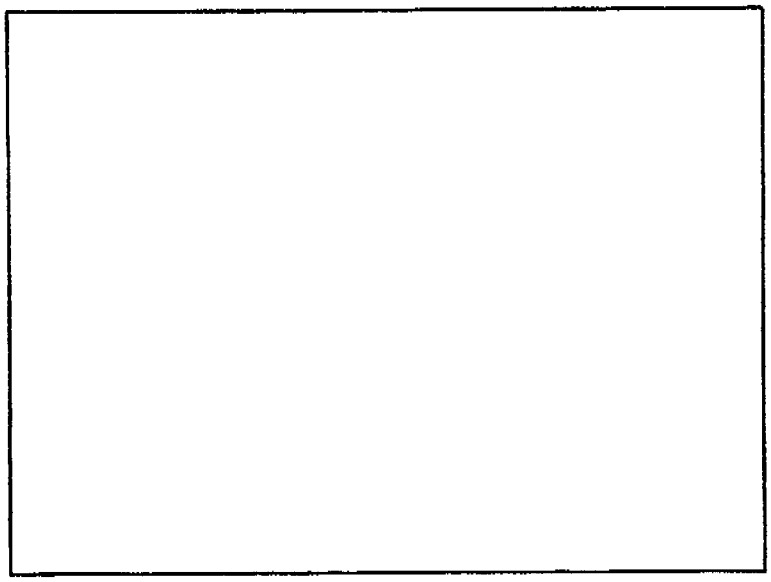

SCHEMATIC OF STACK CROSS SECTION

Ambient temperature . . . . . .
Barometric pressure . . . . . .
Assumed moisture, percent . . . .
Probe length, m (ft) . . . . . .
Nozzle Identification No . . . .
Average calibrated nozzle
diameter, cm (in.) . . . . . .
Probe heater setting . . . . . .
Leak rate, m^3/min (cfm) . . . . .
Probe liner material . . . . . .
Static pressure, mm Hg (in. Hg) .
Filter No. . . . . .

BILLING CODE 6560–50–C

Traverse point number	Sampling time (e) min.	Vacuum mm Hg (in. Hg)	Stack temperature (T) C (°F)	Velocity head (ΔP) mm (in) H_2O	Pressure differential across orifice meter mm H_2O (in. H_2O)	Gas sample volume m^3 (ft^3)	Gas sample temperature at dry gas meter		Filter holder temperature C (°F)	Temperature of gas leaving condenser or last impinger C (°F)
							Inlet C (°F)	Outlet C (°F)		
	.....	.....	.....	.....	.....	.....	.....	.....	.....	.....
	.....	.....	.....	.....	.....	.....	.....	.....	.....	.....
	.....	.....	.....	.....	.....	.....	.....	.....	.....	.....
	.....	.....	.....	.....	.....	.....	.....	.....	.....	.....
	.....	.....	.....	.....	.....	.....	.....	.....	.....	.....
Total	.....	.....	.....	.....	.....	.....	Avg.	Avg.	.....	.....
Average	.....	.....	.....	.....	.....	.....	Avg.	.....	.....	.....

8.6.3 Clean the stack access ports prior to the test run to eliminate the chance of sampling deposited material. To begin sampling, remove the nozzle cap, verify that the probe heating system are at the specified temperature, and verify that the pitot tube and probe are properly positioned. Position the nozzle at the first traverse point, with the tip pointing directly into the gas stream. Immediately start the pump and adjust the flow to isokinetic conditions. Nomographs, which aid in the rapid adjustment of the isokinetic sampling rate without excessive computations, are available. These nomographs are designed for use when the Type S pitot tube coefficient is 0.84 ± 0.02 and the stack gas equivalent density (dry molecular weight) is equal to 29 ± 4. APTD-0576 details the procedure for using the nomographs. If the stack gas molecular weight and the pitot tube coefficient are outside the above ranges, do not use the nomographs unless appropriate steps are taken to compensate for the deviations.

8.6.4 When the stack is under significant negative pressure (equivalent to the height of the impinger stem), take care to close the coarse-adjust valve before inserting the probe into the stack in order to prevent liquid from backing up through the train. If necessary, a low vacuum on the train may have to be started prior to entering the stack.

8.6.5 When the probe is in position, block off the openings around the probe and stack access port to prevent unrepresentative dilution of the gas stream.

8.6.6 Traverse the stack cross section, as required by EPA Method 1, 40 CFR part 60, appendix A, being careful not to bump the probe nozzle into the stack walls when sampling near the walls or when removing or inserting the probe through the access port, in order to minimize the chance of extracting deposited material.

8.6.7 During the test run, make periodic adjustments to keep the temperature around the probe at the proper levels. Add more ice and, if necessary, salt, to maintain a temperature of <20°C (68°F) at the silica gel outlet.

8.6.8 A single train shall be used for the entire sampling run, except in cases where simultaneous sampling is required in two or more separate ducts or at two or more different locations within the same duct, or in cases where equipment failure necessitates a change of trains. An additional train or trains may also be used for sampling when the capacity of a single train is exceeded.

8.6.9 When two or more trains are used, separate analyses of components from each train shall be performed. If multiple trains have been used because the capacity of a single train would be exceeded, first impingers from each train may be combined, and second impingers from each train may be combined.

8.6.10 At the end of the sampling run, turn off the coarse-adjust valve, remove the probe and nozzle from the stack, turn off the pump, record the final dry gas meter reading, and conduct a post-test leak-check. Also, check the pitot lines as described in EPA Method 2, 40 CFR part 60, appendix A. The lines must pass this leak-check in order to validate the velocity-head data.

8.6.11 Calculate percent isokineticity (see Method 2) to determine whether the run was valid or another test should be made.

8.7 Sample Preservation and Handling

8.7.1 Samples from most sources applicable to this method have acceptable holding times using normal handling practices (shipping samples iced, storing in refrigerator at 2°C until analysis). However, forming section stacks and other sources using waste water sprays may be subject to microbial contamination. For these sources, a biocide (quaternary ammonium compound solution) may be added to collected samples to improve sample stability and method ruggedness.

8.7.2 Sample holding time: Samples should be analyzed within 14 days of collection. Samples must be refrigerated/kept cold for the entire period preceding analysis. After the samples have been brought to room temperature for analysis, any analyses needed should be performed on the same day. Repeated cycles of warming the samples to room temperature/refrigerating/rewarming, then analyzing again, etc., have not been investigated in depth to evaluate if analyte levels remain stable for all sources.

8.7.3 Additional studies will be performed to evaluate whether longer sample holding times are feasible for this method.

8.8 Sample Recovery

8.8.1 Preparation:

8.8.1.1 Proper cleanup procedure begins as soon as the probe is removed from the stack at the end of the sampling period. Allow the probe to cool. When the probe can be handled safely, wipe off all external particulate matter near the tip of the probe nozzle and place a cap over the tip to prevent losing or gaining particulate matter. Do not cap the probe tightly while the sampling train is cooling because a vacuum will be created, drawing liquid from the impingers back through the sampling train.

8.8.1.2 Before moving the sampling train to the cleanup site, remove the probe from the sampling train and cap the open outlet, being careful not to lose any condensate that might be present. Remove the umbilical cord from the last impinger and cap the impinger. If a flexible line is used, let any condensed water or liquid drain into the impingers. Cap off any open impinger inlets and outlets. Ground glass stoppers, Teflon™ caps, or caps of other inert materials may be used to seal all openings.

8.8.1.3 Transfer the probe and impinger assembly to an area that is clean and protected from wind so that the chances of contaminating or losing the sample are minimized.

8.8.1.4 Inspect the train before and during disassembly, and note any abnormal conditions.

8.8.1.5 Save a portion of the washing solution (high purity water) used for cleanup as a blank.

8.8.2 Sample Containers:

8.8.2.1 Container 1: Probe and Impinger Catches. Using a graduated cylinder, measure to the nearest ml, and record the volume of the solution in the first three impingers. Alternatively, the solution may be weighed to the nearest 0.5 g. Include any condensate in the probe in this determination. Transfer the combined impinger solution from the graduated cylinder into the polyethylene bottle. Taking care that dust on the outside of the probe or other exterior surfaces does not get into the sample, clean all surfaces to which the sample is exposed (including the probe nozzle, probe fitting, probe liner, first three impingers, and impinger connectors) with water. Use less than 400 ml for the entire waste (250 ml would be better, if possible). Add the rinse water to the sample container.

8.8.2.1.1 Carefully remove the probe nozzle and rinse the inside surface with water from a wash bottle. Brush with a bristle brush and rinse until the rinse shows no visible particles, after which make a final rinse of the inside surface. Brush and rinse the inside parts of the Swagelok (or equivalent) fitting with water in a similar way.

8.8.2.1.2 Rinse the probe liner with water. While squirting the water into the upper end of the probe, tilt and rotate the probe so that

all inside surfaces will be wetted with water. Let the water drain from the lower end into the sample container. The tester may use a funnel (glass or polyethylene) to aid in transferring the liquid washes to the container. Follow the rinse with a bristle brush. Hold the probe in an inclined position, and squirt water into the upper end as the probe brush is being pushed with a twisting action through the probe. Hold the sample container underneath the lower end of the probe, and catch any water and particulate matter that is brushed from the probe. Run the brush through the probe three times or more. Rinse the brush with water and quantitatively collect these washings in the sample container. After the brushing, make a final rinse of the probe as describe above.

Note: Two people should clean the probe in order to minimize sample losses. Between sampling runs, brushes must be kept clean and free from contamination.

8.8.2.1.3 Rinse the inside surface of each of the first three impingers (and connecting tubing) three separate times. Use a small portion of water for each rinse, and brush each surface to which the sample is exposed with a bristle brush to ensure recovery of fine particulate matter. Make a final rinse of each surface and of the brush, using water.

8.8.2.1.4 After all water washing and particulate matter have been collected in the sample container, tighten the lid so the sample will not leak out when the container is shipped to the laboratory. Mark the height of the fluid level to determine whether leakage occurs during transport. Label the container clearly to identify its contents.

8.8.2.1.5 If the first two impingers are to be analyzed separately to check for breakthrough, separate the contents and rinses of the two impingers into individual containers. Care must be taken to avoid physical carryover from the first impinger to the second. Any physical carryover of collected moisture into the second impinger will invalidate a breakthrough assessment.

8.8.2.2 Container 2: Sample Blank. Prepare a blank by using a polyethylene container and adding a volume of water equal to the total volume in Container 1. Process the blank in the same manner as Container 1.

8.8.2.3 Container 3: Silica Gel. Note the color of the indicating silica gel to determine whether it has been completely spent and make a notation of its condition. The impinger containing the silica gel may be used as a sample transport container with both ends sealed with tightly fitting caps or plugs. Ground-glass stoppers or Teflon™ caps maybe used. The silica gel impinger should then be labeled, covered with aluminum foil, and packaged on ice for transport to the laboratory. If the silica gel is removed from the impinger, the tester may use a funnel to pour the silica gel and a rubber policeman to remove the silica gel from the impinger. It is not necessary to remove the small amount of dust particles that may adhere to the impinger wall and are difficult to remove. Since the gain in weight is to be used for moisture calculations, do not use water or other liquids to transfer the silica gel. If a balance is available in the field, the spent silica gel (or silica gel plus impinger) may be weighed to the nearest 0.5 g.

8.8.2.4 Sample containers should be placed in a cooler, cooled by (although not in contact with) ice. Putting sample bottles in Zip-Lock™ bags can aid in maintaining the integrity of the sample labels. Sample containers should be placed vertically to avoid leakage during shipment. Samples should be cooled during shipment so they will be received cold at the laboratory. It is critical that samples be chilled immediately after recovery. If the source is susceptible to microbial contamination from wash water (e.g. forming section stack), add biocide as directed in section 8.2.5.

8.8.2.5 A quaternary ammonium compound can be used as a biocide to stabilize samples against microbial degradation following collection. Using the stock quaternary ammonium compound (QAC) solution; add 2.5 ml QAC solution for every 100 ml of recovered sample volume (estimate of volume is satisfactory) immediately after collection. The total volume of QAC solution must be accurately known and recorded, to correct for any dilution caused by the QAC solution addition.

8.8.3 Sample Preparation for Analysis

8.8.3.1 The sample should be refrigerated if the analysis will not be performed on the day of sampling. Allow the sample to warm at room temperature for about two hours (if it has been refrigerated) prior to analyzing.

8.8.3.2 Analyze the sample by the pararosaniline method, as described in Section 11. If the color-developed sample has an absorbance above the highest standard, a suitable dilution in high purity water should be prepared and analyzed.

9.0 *Quality Control*

9.1 Sampling: See EPA Manual 600/4-77-02b for Method 5 quality control.

9.2 Analysis: The quality assurance program required for this method includes the analysis of the field and method blanks, and procedure validations. The positive identification and quantitation of formaldehyde are dependent on the integrity of the samples received and the precision and accuracy of the analytical methodology. Quality assurance procedures for this method are designed to monitor the performance of the analytical methodology and to provide the required information to take corrective action if problems are observed in laboratory operations or in field sampling activities.

9.2.1 Field Blanks: Field blanks must be submitted with the samples collected at each sampling site. The field blanks include the sample bottles containing aliquots of sample recover water, and water reagent. At a minimum, one complete sampling train will be assembled in the field staging area, taken to the sampling area, and leak-checked at the beginning and end of the testing (or for the same total number of times as the actual sampling train). The probe of the blank train must be heated during the sample test. The train will be recovered as if it were an actual test sample. No gaseous sample will be passed through the blank sampling train.

9.2.2 Blank Correction: The field blank formaldehyde concentrations will be subtracted from the appropriate sample formaldehyde concentrations. Blank formaldehyde concentrations above 0.25 µg/ml should be considered suspect, and subtraction from the sample formaldehyde concentrations should be performed in a manner acceptable to the Administrator.

9.2.3 Method Blanks: A method blank must be prepared for each set of analytical operations, to evaluate contamination and artifacts that can be derived from glassware, reagents, and sample handling in the laboratory.

10 *Calibration*

10.1 Probe Nozzle: Probe nozzles shall be calibrated before their initial use in the field. Using a micrometer, measure the inside diameter of the nozzle to the nearest 0.025 mm (0.001 in). Make measurements at three separate places across the diameter and obtain the average of the measurements. The difference between the high and low numbers shall not exceed 0.1 mm (0.004 in). When the nozzle becomes nicked or corroded, it shall be repaired and calibrated, or replaced with a calibrated nozzle before use. Each nozzle must be permanently and uniquely identified.

10.2 Pitot Tube: The Type S pitot tube assembly shall be calibrated according to the procedure outlined in Section 4 of EPA Method 2, or assigned a nominal coefficient of 0.84 if it is not visibly nicked or corroded and if it meets design and intercomponent spacing specifications.

10.3 Metering System

10.3.1 Before its initial use in the field, the metering system shall be calibrated according to the procedure outlined in APTD-0576. Instead of physically adjusting the dry-gas meter dial readings to correspond to the wet-test meter readings, calibration factors may be used to correct the gas meter dial readings mathematically to the proper values. Before calibrating the metering system, it is suggested that a leak-check be conducted. For metering systems having diaphragm pumps, the normal leak-check procedure will not delete leakages with the pump. For these cases, the following leak-check procedure will apply: Make a ten-minute calibration run at 0.00057 m^3/min (0.02 cfm). At the end of the run, take the difference of the measured wet-test and dry-gas meter volumes and divide the difference by 10 to get the leak rate. The leak rate should not exceed 0.00057 m^3/min (0.02 cfm).

10.3.2 After each field use, check the calibration of the metering system by performing three calibration runs at a single intermediate orifice setting (based on the previous field test). Set the vacuum at the maximum value reached during the test series. To adjust the vacuum, insert a valve between the wet-test meter and the inlet of the metering system. Calculate the average value of the calibration factor. If the calibration has changed by more than 5 percent, recalibrate the meter over the full range of orifice settings, as outlined in APTD-0576.

10.3.3 Leak-check of metering system: The portion of the sampling train from the pump to the orifice meter (see Figure 1)

should be leak-checked prior to initial use and after each shipment. Leakage after the pump will result in less volume being recorded than is actually sampled. Use the following procedure: Close the main valve on the meter box. Insert a one-hole rubber stopper with rubber tubing attached into the orifice exhaust pipe. Disconnect and vent the low side of the orifice manometer. Close off the low side orifice tap. Pressurize the system to 13–18 cm (5–7 in) water column by blowing into the rubber tubing. Pinch off the tubing and observe the manometer for 1 min. A loss of pressure on the manometer indicates a leak in the meter box. Leaks must be corrected.

Note: If the dry-gas meter coefficient values obtained before and after a test series differ by >5 percent, either the test series must be voided or calculations for test series must be performed using whichever meter coefficient value (i.e., before or after) gives the lower value of total sample volume.

10.4 Probe Heater: The probe heating system must be calibrated before its initial use in the field according to the procedure outlined in APTD–0576. Probes constructed according to APTD–0581 need not be calibrated if the calibration curves in APTD–0576 are used.

10.5 Temperature gauges: Use the procedure in section 4.3 of USEPA Method 2 to calibrate in-stack temperature gauges. Dial thermometers such as are used for the dry gas meter and condenser outlet, shall be calibrated against mercury-in-glass thermometers.

10.6 Barometer: Adjust the barometer initially and before each test series to agree to within ±2.5 mm Hg (0.1 in Hg) of the mercury barometer. Alternately, if a National Weather Service Station (NWSS) is located at the same altitude above sea level as the test site, the barometric pressure reported by the NWSS may be used.

10.7 Balance: Calibrate the balance before each test series, using Class S standard weights. The weights must be within ±0.5 percent of the standards, or the balance must be adjusted to meet these limits.

11.0 *Procedure for Analysis.*

The working formaldehyde standards (0.25, 0.50, 1.0, 2.0, and 3.0 µg/ml) are analyzed and a calibration curve is calculated for each day's analysis. The standards should be analyzed first to ensure that the method is working properly prior to analyzing the samples. In addition, a sample of the high-purity water should also be analyzed and used as a "0" formaldehyde standard.

The procedure for analysis of samples and standards is identical: Using the pipet set to 2.50 ml, pipet 2.50 ml of the solution to be analyzed into a polystyrene cuvette. Using the 250 µl pipet, pipet 250 µl of the pararosaniline reagent solution into the cuvette. Seal the top of the cuvette with a Parafilm square and shake at least 30 seconds to ensure the solution in the cuvette is well-mixed. Peel back a corner of the Parafilm so the next reagent can be added. Using the 250 µl pipet, pipet 250 µl of the sodium sulfite reagent solution into the cuvette. Reseal the cuvette with the Parafilm, and again shake for about 30 seconds to mix the solution in the cuvette. Record the time of addition of the sodium sulfite and let the color develop at room temperature for 60 minutes. Set the spectrophotometer to 570 nm and set to read in Absorbance Units. The spectrophotometer should be equipped with a holder for the 1-cm pathlength cuvettes. Place cuvette(s) containing high-purity water in the spectrophotometer and adjust to read 0.000 AU.

After the 60 minutes color development period, read the standard and samples in the spectrophotometer. Record the absorbance reading for each cuvette. The calibration curve is calculated by linear regression, with the formaldehyde concentration as the "x" coordinate of the pair, and the absorbance reading as the "y" coordinate. The procedure is very reproducible, and typically will yield values similar to these for the calibration curve:

Correlation Coefficient: 0.9999
Slope: 0.50
Y-Intercept: 0.090

The formaldehyde concentration of the samples can be found by using the trend-line feature of the calculator or computer program used for the linear regression. For example, the TI–55 calculators use the "X" key (this gives the predicted formaldehyde concentration for the value of the absorbance you key in for the sample). Multiply the formaldehyde concentration from the sample by the dilution factor, if any, for the sample to give the formaldehyde concentration of the original, undiluted, sample (units will be micrograms/ml).

11.1 Notes on the Pararosaniline Procedure

11.1.1 The pararosaniline method is temperature-sensitive. However, the small fluctuations typical of a laboratory will not significantly affect the results.

11.1.2 The calibration curve is linear to beyond 4 "µg/ml" formaldehyde, however, a research-grade spectrophotometer is required to reproducibly read the high absorbance values. Consult your instrument manual to evaluate the capability of the spectrophotometer.

11.1.3 The quality of the laboratory water used to prepare standards and make dilutions is critical. It is important that the cautions given in the Reagents section be observed. This procedure allows quantitation of formaldehyde at very low levels, and thus it is imperative to avoid contamination from other sources of formaldehyde and to exercise the degree of care required for trace analyses.

11.1.4 The analyst should become familiar with the operation of the Oxford or equivalent pipettors before using them for an analysis. Follow the instructions of the manufacturer; one can pipet water into a tared container on any analytical balance to check pipet accuracy and precision. This will also establish if the proper technique is being used. Always use a new tip for each pipetting operation.

11.1.5 This procedure follows the recommendations of ASTM Standard Guide D 3614, reading all solutions versus water in the reference cell. This allows the absorbance of the blank to be tracked on a daily basis. Refer to ASTM D 3614 for more information.

12.0 *Calculations*

Carry out calculations, retaining at least one extra decimal figure beyond that of the acquired data. Round off figures after final calculations.

12.1 Calculations of Total Formaldehyde

12.1.1 To determine the total formaldehyde in mg, use the following equation if biocide was not used:

Total mg formaldehyde=

$$C_d \times V \times DF \times 0.001 \ \text{mg/µg}$$

Where:

C_d = measured conc. formaldehyde, µg/ml
V = total volume of stack sample, ml
DF = dilution factor

12.1.2 To determine the total formaldehyde in mg, use the following equation if biocide was used:

Total mg formaldehyde=

$$\frac{C_d \times V}{(V - B) \times DF \times 0.001 \ \text{mg/µg}}$$

Where:

C_d = measured conc. formaldehyde, µg/ml
V = total volume of stack sample, ml
B = total volume of biocide added to sample, ml
DF = dilution factor

12.2 Formaldehyde concentration (mg/m³) in stack gas. Determine the formaldehyde concentration (mg/m³) in the stack gas using the following equation: Formaldehyde concentration (mg/m³) =

$$\frac{K \times [\text{total formaldehyde, mg}]}{V_m(\text{std})}$$

Where:

K = 35.31 cu ft/m³ for V_m(std) in English units, or
K = 1.00 m³/m³ for V_m(std) in metric units
V_m(std) = volume of gas sample measured by a dry gas meter, corrected to standard conditions, dscm (dscf)

12.3 Average dry gas meter temperature and average orifice pressure drop are obtained from the data sheet.

12.4 Dry Gas Volume: Calculate V_m(std) and adjust for leakage, if necessary, using the equation in Section 6.3 of EPA Method 5, 40 CFR part 60, appendix A.

12.5 Volume of Water Vapor and Moisture Content: Calculated the volume of water vapor and moisture content from equations 5–2 and 5–3 of EPA Method 5.

13.0 *Method Performance*

The precision of this method is estimated to be better than ±5 percent, expressed as ± the percent relative standard deviation.

14.0 *Pollution Prevention.* (Reserved)

15.0 *Waste Management.* (Reserved)

16.0 *References*

R.R. Miksch, et al., Analytical Chemistry, November 1981, 53 pp. 2118–2123.
J.F. Walker, Formaldehyde, Third Edition, 1964.
US EPA 40 CFR, part 60, Appendix A, Test Methods 1–5

Method 318—Extractive FTIR Method for the Measurement of Emissions From the Mineral Wool and Wool Fiberglass Industries

1.0 *Scope and Application*

This method has been validated and approved for mineral wool and wool fiberglass sources. This method may not be applied to other source categories without validation and approval by the Administrator according to the procedures in Test Method 301, 40 CFR part 63, appendix A. For sources seeking to apply FTIR to other source categories, Test Method 320 (40 CFR part 63, appendix A) may be utilized.

1.1 Scope. The analytes measured by this method and their CAS numbers are:

Carbon Monoxide 630-08-0
Carbonyl Sulfide 463-58-1
Formaldehyde 50-00-0
Methanol 1455-13-6
Phenol 108-95-2

1.2 Applicability

1.2.1 This method is applicable for the determination of formaldehyde, phenol, methanol, carbonyl sulfide (COS) and carbon monoxide (CO) concentrations in controlled and uncontrolled emissions from manufacturing processes using phenolic resins. The compounds are analyzed in the mid-infrared spectral region (about 400 to 4000 cm−1 or 25 to 2.5 μm). Suggested analytical regions are given below (Table 1). Slight deviations from these recommended regions may be necessary due to variations in moisture content and ammonia concentration from source to source.

TABLE 1.—EXAMPLE ANALYTICAL REGIONS

Compound	Analytical region (cm−1) FL_m − FU_m	Potential interferants
Formaldehyde	2840.93−2679.83	Water, Methane.
Phenol	1231.32−1131.47	Water, Ammonia, Methane.
Methanol	1041.56−1019.95	Water, Ammonia.
COS[a]	2028.4−2091.9	Water, CO_2, CO.
CO[a]	2092.1−2191.8	Water, CO_2, COS.

[a] Suggested analytical regions assume about 15 percent moisture and CO_2, and that COS and CO have about the same absorbance (in the range of 10 to 50 ppm). If CO and COS are hundreds of ppm or higher, then CO_2 and moisture interference is reduced. If CO or COS is present at high concentration and the other at low concentration, then a shorter cell pathlength may be necessary to measure the high concentration component.

1.2.2 This method does not apply when: (a) Polymerization of formaldehyde occurs, (b) moisture condenses in either the sampling system or the instrumentation, and (c) when moisture content of the gas stream is so high relative to the analyte concentrations that it causes severe spectral interference.

1.3 Method Range and Sensitivity

1.3.1 The analytical range is a function of instrumental design and composition of the gas stream. Theoretical detection limits depend, in part, on (a) the absorption coefficient of the compound in the analytical frequency region, (b) the spectral resolution, (c) interferometer sampling time, (d) detector sensitivity and response, and (e) absorption pathlength.

1.3.2 Practically, there is no upper limit to the range. The practical lower detection limit is usually higher than the theoretical value, and depends on (a) moisture content of the flue gas, (b) presence of interferants, and (c) losses in the sampling system. In general, a 22 meter pathlength cell in a suitable sampling system can achieve practical detection limits of 1.5 ppm for three compounds (formaldehyde, phenol, and methanol) at moisture levels up to 15 percent by volume. Sources with uncontrolled emissions of CO and COS may require a 4 meter pathlength cell due to high concentration levels. For these two compounds, make sure absorbance of highest concentration component is <1.0.

1.4 Data Quality Objectives

1.4.1 In designing or configuring the system, the analyst first sets the data quality objectives, i.e., the desired lower detection limit (DL_i) and the desired analytical uncertainty (AU_i) for each compound. The instrumental parameters (factors b, c, d, and e in Section 1.3.1) are then chosen to meet these requirements, using Appendix D of the FTIR Protocol.

1.4.2 Data quality for each application is determined, in part, by measuring the RMS (Root Mean Square) noise level in each analytical spectral region (Appendix C of the FTIR Protocol). The RMS noise is defined as the RMSD (Root Mean Square Deviation) of the absorbance values in an analytical region from the mean absorbance value of the region. Appendix D of the FTIR Protocol defines the MAU_{im} (minimum analyte uncertainty of the ith analyte in the mth analytical region). The MAU is the minimum analyte concentration for which the analytical uncertainty limit (AU_i) can be maintained: if the measured analyte concentration is less than MAU_i, then data quality is unacceptable. Table 2 gives some example DL and AU values along with calculated areas and MAU values using the protocol procedures.

TABLE 2.—EXAMPLE PRE-TEST PROTOCOL CALCULATIONS

Protocol value	Form	Phenol	Methanol	Protocol appendix
Reference concentration[a] (ppm-meters)/K	3.016	3.017	5.064	
Reference Band Area	8.2544	16.6417	4.9416	B
DL (ppm-meters)/K	0.1117	0.1117	0.1117	B
AU	0.2	0.2	0.2	B
CL	0.02234	0.02234	0.02234	B
FL	2679.83	1131.47	1019.95	B
FU	2840.93	1231.32	1041.56	B
FC	2760.38	1181.395	1030.755	B
AAI (ppm-meters)/K	0.18440	0.01201	0.00132	B
RMSD	2.28E−03	1.21E−03	1.07E−03	C
MAU (ppm-meters)/K	4.45E−02	7.26E−03	4.68E−03	D
MAU (ppm at 22)	0.0797	0.0130	0.0084	D

[a] Concentration units are: ppm concentration of the reference sample (ASC), times the path length of the FTIR cell used when the reference spectrum was measured (meters), divided by the absolute temperature of the reference sample in Kelvin (K), or (ppm-meters)/K.

2.0 *Summary of Method*

2.1 Principle

2.1.1 Molecules are composed of chemically bonded atoms, which are in constant motion. The atomic motions result in bond deformations (bond stretching and bond-angle bending). The number of fundamental (or independent) vibrational motions depends on the number of atoms (N) in the molecule. At typical testing temperatures, most molecules are in the ground-state vibrational state for most of their fundamental vibrational motions. A molecule can undergo a transition from its ground state (for a particular vibration) to the first excited state by absorbing a quantum of light at a frequency characteristic of the molecule and the molecular motion. Molecules also undergo rotational transitions by absorbing energies in the far-infrared or microwave spectral regions. Rotational transition absorbencies are superimposed on the vibrational absorbencies to give a characteristic shape to each rotational-vibrational absorbance "band."

2.1.2 Most molecules exhibit more than one absorbance band in several frequency regions to produce an infrared spectrum (a characteristic pattern of bands or a "fingerprint") that is unique to each molecule. The infrared spectrum of a molecule depends on its structure (bond lengths, bond angles, bond strengths, and atomic masses). Even small differences in structure can produce significantly different spectra.

2.1.3 Spectral band intensities vary with the concentration of the absorbing compound. Within constraints, the relationship between absorbance and sample concentration is linear. Sample spectra are compared to reference spectra to determine the species and their concentrations.

2.2 Sampling and Analysis

2.2.1 Flue gas is continuously extracted from the source, and the gas or a portion of the gas is conveyed to the FTIR gas cell, where a spectrum of the flue gas is recorded. Absorbance band intensities are related to sample concentrations by Beer's Law. Where:

$$A_v = \sum a_i b c_i \qquad (6)$$

A_v = absorbance of the ith component at the given frequency, v.
a = absorption coefficient of the ith component at the frequency, v.
b = path length of the cell.
c = concentration of the ith compound in the sample at frequency v.

2.2.2 After identifying a compound from the infrared spectrum, its concentration is determined by comparing band intensities in the sample spectrum to band intensities in "reference spectra" of the formaldehyde, phenol, methanol, COS and CO. These reference spectra are available in a permanent soft copy from the EPA spectral library on the EMTIC bulletin board. The source may also prepare reference spectra according to Section 4.5 of the FTIR Protocol.

Note: Reference spectra not prepared according to the FTIR Protocol are not acceptable for use in this test method. Documentation detailing the FTIR Protocol steps used in preparing any non-EPA reference spectra shall be included in each test report submitted by the source.

2.3 Operator Requirements. The analyst must have some knowledge of source sampling and of infrared spectral patterns to operate the sampling system and to choose a suitable instrument configuration. The analyst should also understand FTIR instrument operation well enough to choose an instrument configuration consistent with the data quality objectives.

3.0 *Definitions*

See Appendix A of the *FTIR* Protocol.

4.0 *Interferences*

4.1 Analytical (or Spectral) Interferences. Water vapor. High concentrations of ammonia (hundreds of ppm) may interfere with the analysis of low concentrations of methanol (1 to 5 ppm). For CO, carbon dioxide and water may be interferants. In cases where COS levels are low relative to CO levels, CO and water may be interferants.

4.2 Sampling System Interferences. Water, if it condenses, and ammonia, which reacts with formaldehyde.

5.0 *Safety*

5.1 Formaldehyde is a suspected carcinogen; therefore, exposure to this compound must be limited. Proper monitoring and safety precautions must be practiced in any atmosphere with potentially high concentrations of CO.

5.2 This method may involve sampling at locations having high positive or negative pressures, high temperatures, elevated heights, high concentrations of hazardous or toxic pollutants, or other diverse sampling conditions. It is the responsibility of the tester(s) to ensure proper safety and health practices, and to determine the applicability of regulatory limitations before performing this test method.

6.0 *Equipment and Supplies*

The equipment and supplies are based on the schematic of a sampling train shown in Figure 1. Either the evacuated or purged sampling technique may be used with this sampling train. Alternatives may be used, provided that the data quality objectives of this method are met.

6.1 Sampling Probe. Glass, stainless steel, or other appropriate material of sufficient length and physical integrity to sustain heating, prevent adsorption of analytes, and to reach gas sampling point.

6.2 Particulate Filters. A glass wool plug (optional) inserted at the probe tip (for large particulate removal) and a filter rated at 1-micron (e.g., Balston™) for fine particulate removal, placed immediately after the heated probe.

6.3 Sampling Line/Heating System. Heated (maintained at 250 ± 25 degrees F) stainless steel, Teflon™, or other inert material that does not adsorb the analytes, to transport the sample to analytical system.

6.4 Stainless Steel Tubing, Type 316, e.g., ⅜ in. diameter, and appropriate length for heated connections.

6.5 Gas Regulators. Appropriate for individual gas cylinders.

BILLING CODE 6560–50–P

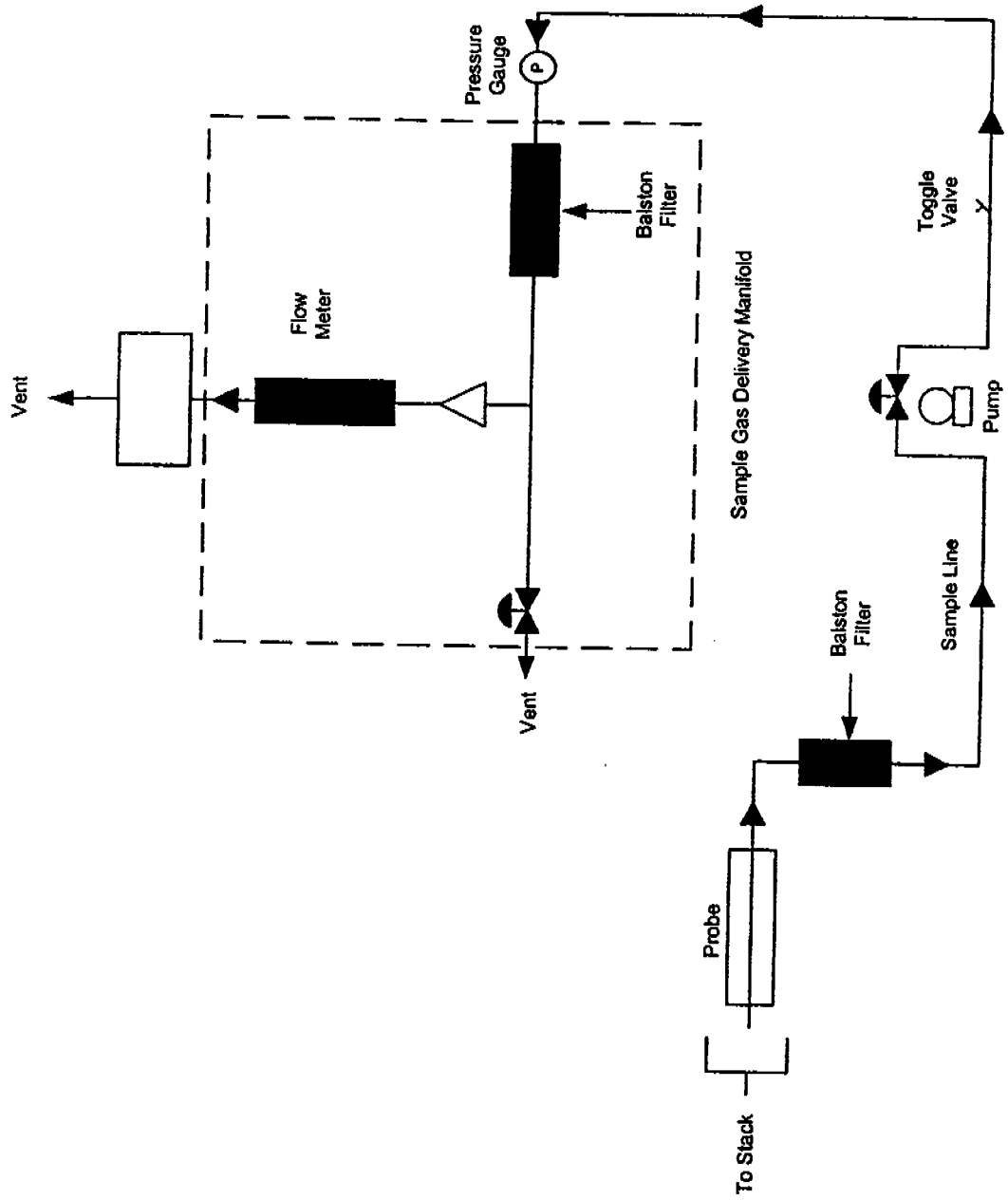

Figure 1. The extractive FTIR sampling system.

BILLING CODE 6560–50–C

6.6 Teflon™ Tubing. Diameter (e.g., 3/8 in.) and length suitable to connect cylinder regulators.

6.7 Sample Pump. A leak-free pump (e.g., KNF™), with by-pass valve, capable of pulling sample through entire sampling system at a rate of about 10 to 20 L/min. If placed before the analytical system, heat the pump and use a pump fabricated from materials non-reactive to the target pollutants. If the pump is located after the instrument, systematically record the sample pressure in the gas cell.

6.8 Gas Sample Manifold. A heated manifold that diverts part of the sample stream to the analyzer, and the rest to the by-pass discharge vent or other analytical instrumentation.

6.9 Rotameter. A calibrated 0 to 20 L/min range rotameter.

6.10 FTIR Analytical System. Spectrometer and detector, capable of measuring formaldehyde, phenol, methanol, COS and CO to the predetermined minimum detectable level. The system shall include a personal computer with compatible software that provides real-time updates of the spectral profile during sample collection and spectral collection.

6.11 FTIR Cell Pump. Required for the evacuated sampling technique, capable of evacuating the FTIR cell volume within 2 minutes. The FTIR cell pump should allow the operator to obtain at least 8 sample spectra in 1 hour.

6.12 Absolute Pressure Gauge. Heatable and capable of measuring pressure from 0 to 1000 mmHg to within ±2.5 mmHg (e.g., Baratron™).

6.13 Temperature Gauge. Capable of measuring the cell temperature to within ±2°C.

7.0 *Reagents and Standards*

7.1 Ethylene (Calibration Transfer Standard). Obtain NIST traceable (or Protocol) cylinder gas.

7.2 Nitrogen. Ultra high purity (UHP) grade.

7.3 Reference Spectra. Obtain reference spectra for the target pollutants at concentrations that bracket (in ppm-meter/K) the emission source levels. Also, obtain reference spectra for SF_6 and ethylene. Suitable concentrations are 0.0112 to 0.112 (ppm-meter)/K for SF_6 and 5.61 (ppm-meter)/K or less for ethylene. The reference spectra shall meet the criteria for acceptance outlined in Section 2.2.2. The optical density (ppm-meters/K) of the reference spectrum must match the optical density of the sample spectrum within (less than) 25 percent.

8.0 *Sample Collection, Preservation, and Storage*

Sampling should be performed in the following sequence: Collect background, collect CTS spectrum, collect samples, collect post-test CTS spectrum, verify that two copies of all data were stored on separate computer media.

8.1 Pretest Preparations and Evaluations. Using the procedure in Section 4.0 of the *FTIR Protocol*, determine the optimum sampling system configuration for sampling the target pollutants. Table 2 gives some example values for AU, DL, and MAU. Based on a study (Reference 1), an FTIR system using 1 cm^{-1} resolution, 22 meter path length, and a broad band MCT detector was suitable for meeting the requirements in Table 2. Other factors that must be determined are:

a. Test requirements: AU_i, $CMAX_i$, DL_i, OFU_i, and t_{AN} for each.

b. Interferants: See Table 1.

c. Sampling system: L_S', P_{min}, P_S', T_S', t_{SS}, V_{SS}; fractional error, MIL.

d. Analytical regions: 1 through N_m, FL_m, FC_m, and FU_m, plus interferants, FFU_m, FFL_m, wavenumber range FNU to FNL. See Tables 1 and 2.

8.1.1 If necessary, sample and acquire an initial spectrum. Then determine the proper operational pathlength of the instrument to obtain non-saturated absorbances of the target analytes.

8.1.2 Set up the sampling train as shown in Figure 1.

8.2 Sampling System Leak-check. Leak-check from the probe tip to pump outlet as follows: Connect a 0- to 250-mL/min rate meter (rotameter or bubble meter) to the outlet of the pump. Close off the inlet to the probe, and note the leakage rate. The leakage rate shall be ≤200 mL/min.

8.3 Analytical System Leak-check.

8.3.1 For the evacuated sample technique, close the valve to the FTIR cell, and evacuate the absorption cell to the minimum absolute pressure P_{min}. Close the valve to the pump, and determine the change in pressure ΔP_v after 2 minutes.

8.3.2 For both the evacuated sample and purging techniques, pressurize the system to about 100 mmHg above atmospheric pressure. Isolate the pump and determine the change in pressure ΔP_p after 2 minutes.

8.3.3 Measure the barometric pressure, P_b, in mmHg.

8.3.4 Determine the percent leak volume $\%V_L$ for the signal integration time t_{SS} and for ΔP_{max}, i.e., the larger of ΔP_v or ΔP_p, as follows:

$$\%V_L = 50\, t_{SS} \frac{\Delta P_{max}}{P_{SS}} \qquad (2)$$

Where:

50 = 100% divided by the leak-check time of 2 minutes.

8.3.5 Leak volumes in excess of 4 percent of the sample system volume V_{SS} are unacceptable.

8.4 Background Spectrum. Evacuate the gas cell to ≤5 mmHg, and fill with dry nitrogen gas to ambient pressure. Verify that no significant amounts of absorbing species (for example water vapor and CO_2) are present. Collect a background spectrum, using a signal averaging period equal to or greater than the averaging period for the sample spectra. Assign a unique file name to the background spectrum. Store the spectra of the background interferogram and processed single-beam background spectrum on two separate computer media (one is used as the back-up). If continuous sampling will be used during sample collection, collect the background spectrum with nitrogen gas flowing through the cell at the same pressure and temperature as will be used during sampling.

8.5 Pre-Test Calibration Transfer Standard. Evacuate the gas cell to ≤5 mmHg absolute pressure, and fill the FTIR cell to atmospheric pressure with the CTS gas. Or, purge the cell with 10 cell volumes of CTS gas. Record the spectrum. If continuous sampling will be used during sample collection, collect the CTS spectrum with CTS gas flowing through the cell at the same pressure and temperature as will be used during sampling.

8.6 Samples

8.6.1 Evacuated Samples. Evacuate the absorbance cell to ≤5 mmHg absolute pressure. Fill the cell with flue gas to ambient pressure and record the spectrum. Before taking the next sample, evacuate the cell until no further evidence of absorption exists. Repeat this procedure to collect at least 8 separate spectra (samples) in 1 hour.

8.6.2 Purge Sampling. Purge the FTIR cell with 10 cell volumes of flue gas and at least for about 10 minutes. Discontinue the gas cell purge, isolate the cell, and record the sample spectrum and the pressure. Before taking the next sample, purge the cell with 10 cell volumes of flue gas.

8.6.3 Continuous Sampling. Spectra can be collected continuously while the FTIR cell is being purged. The sample integration time, t_{ss}, the sample flow rate through the FTIR gas cell, and the total run time must be chosen so that the collected data consist of at least 10 spectra with each spectrum being of a separate cell volume of flue gas. More spectra can be collected over the run time and the total run time (and number of spectra) can be extended as well.

8.7 Sampling QA, Data Storage and Reporting

8.7.1 Sample integration times should be sufficient to achieve the required signal-to-noise ratios. Obtain an absorbance spectrum by filling the cell with nitrogen. Measure the RMSD in each analytical region in this absorbance spectrum. Verify that the number of scans is sufficient to achieve the target MAU (Table 2).

8.7.2 Identify all sample spectra with unique file names.

8.7.3 Store on two separate computer media a copy of sample interferograms and processed spectra. The data shall be available to the Administrator on request for the length of time specified in the applicable regulation.

8.7.4 For each sample spectrum, document the sampling conditions, the sampling time (while the cell was being filled), the time the spectrum was recorded, the instrumental conditions (path length, temperature, pressure, resolution, integration time), and the spectral file name. Keep a hard copy of these data sheets.

8.8 Signal Transmittance. While sampling, monitor the signal transmittance through the instrumental system. If signal transmittance (relative to the background) drops below 95 percent in any spectral region where the sample does not absorb infrared energy, obtain a new background spectrum.

8.9 Post-run CTS. After each sampling run, record another CTS spectrum.

8.10 Post-test QA

8.10.1 Inspect the sample spectra immediately after the run to verify that the

gas matrix composition was close to the expected (assumed) gas matrix.

8.10.2 Verify that the sampling and instrumental parameters were appropriate for the conditions encountered. For example, if the moisture is much greater than anticipated, it will be necessary to use a shorter path length or dilute the sample.

8.10.3 Compare the pre and post-run CTS spectra. They shall agree to within −5 percent. See FTIR Protocol, Appendix E.

9.0 *Quality Control*

Follow the quality assurance procedures in the method, including the analysis of pre and post-run calibration transfer standards (Sections 8.5 and 8.9) and the post-test quality assurance procedures in Section 8.10.

10.0 *Calibration and Standardization*

10.1 Signal-to-Noise Ratio (S/N). The S/N shall be sufficient to meet the MAU in each analytical region.

10.2 Absorbance Pathlength. Verify the absorbance path length by comparing CTS spectra to reference spectra of the calibration gas(es). See FTIR Protocol, Appendix E.

10.3 Instrument Resolution. Measure the line width of appropriate CTS band(s) and compare to reference CTS spectra to verify instrumental resolution.

10.4 Apodization Function. Choose appropriate apodization function. Determine any appropriate mathematical transformations that are required to correct instrumental errors by measuring the CTS. Any mathematical transformations must be documented and reproducible.

10.5 FTIR Cell Volume. Evacuate the cell to ≤5 mmHg. Measure the initial absolute temperature (T_i) and absolute pressure (P_i). Connect a wet test meter (or a calibrated dry gas meter), and slowly draw room air into the cell. Measure the meter volume (V_m), meter absolute temperature (T_m), and meter absolute pressure (P_m), and the cell final absolute temperature (T_f) and absolute pressure (P_f). Calculate the FTIR cell volume V_{ss}, including that of the connecting tubing, as follows:

$$V_{SS} = \frac{V_m \frac{P_m}{T_m}}{\left[\frac{P_f}{T_f} - \frac{P_i}{T_i}\right]} \qquad (8)$$

As an alternative to the wet test meter/calibrated dry gas meter procedure, measure the inside dimensions of the cell cylinder and calculate its volume.

11.0 *Procedure*

Refer to Sections 4.6–4.11, Sections 5, 6, and 7, and the appendices of the FTIR Protocol.

12.0 *Data Analysis and Calculations*

a. Data analysis is performed using appropriate reference spectra whose concentrations can be verified using CTS spectra. Various analytical programs are available to relate sample absorbance to a concentration standard. Calculated concentrations should be verified by analyzing spectral baselines after mathematically subtracting scaled reference spectra from the sample spectra. A full description of the data analysis and calculations may be found in the FTIR Protocol (Sections 4.0, 5.0, 6.0 and appendices).

b. Correct the calculated concentrations in sample spectra for differences in absorption pathlength between the reference and sample spectra by:

$$C_{corr} = \left[\frac{L_r}{L_s}\right]\left[\frac{T_s}{T_r}\right]C_{calc} \qquad (9)$$

Where:

C_{corr} = The pathlength corrected concentration.

C_{calc} = The initial calculated concentration (output of the Multicomp program designed for the compound).

L_r = The pathlength associated with the reference spectra.

L_s = The pathlength associated with the sample spectra.

T_s = The absolute temperature (K) of the sample gas.

T_r = The absolute gas temperature (K) at which reference spectra were recorded.

13.0 *Reporting and Recordkeeping*

All interferograms used in determining source concentration shall be stored for the period of time required in the applicable regulation. The Administrator has the option of requesting the interferograms recorded during the test in electronic form as part of the test report.

14.0 *Method Performance*

Refer to the FTIR Protocol.

15.0 *Pollution Prevention.* [Reserved]

16.0 *Waste Management*

Laboratory standards prepared from the formaldehyde and phenol are handled according to the instructions in the materials safety data sheets (MSDS).

17.0 *References*

(1) "Field Validation Test Using Fourier Transform Infrared (FTIR) Spectrometry To Measure Formaldehyde, Phenol and Methanol at a Wool Fiberglass Production Facility." Draft. U.S. Environmental Protection Agency Report, Entropy, Inc., EPA Contract No. 68D20163, Work Assignment I–32, December 1994 (docket item II–A–13).

(2) "Method 301—Field Validation of Pollutant Measurement Methods from Various Waste Media." 40 CFR part 63, appendix A.

[FR Doc. 99–12758 Filed 6–11–99; 8:45 am]

BILLING CODE 6560–50–P

GENERAL SERVICES ADMINISTRATION

41 CFR Part 101–47

[FPMR Amendment H–203]

RIN 3090–AG39

Utilization and Disposal of Real Property Appraisal

AGENCY: Office of Governmentwide Policy, GSA.

ACTION: Final rule.

SUMMARY: This rule amends the Federal Property Management Regulations to clarify and strengthen agency responsibilities for conducting appraisals on real property that is available for disposal. It ensures the reliability, integrity, and confidentiality of those appraisals.

EFFECTIVE DATE: June 14, 1999.

FOR FURTHER INFORMATION CONTACT: Mr. John Q. Martin, Director, Redeployment Services Division at (202) 501–0084.

SUPPLEMENTARY INFORMATION:

A. Regulatory Flexibility Act

This final rule is not required to be published in the **Federal Register** for notice and comment; therefore, the Regulatory Flexibility Act does not apply.

B. Executive Order 12866

The General Services Administration (GSA) has determined that this rule is not a significant regulatory action for the purposes of Executive Order 12866 of September 30, 1993.

C. Paperwork Reduction Act

The Paperwork Reduction Act does not apply because the revisions do not impose recordkeeping or information collection requirements, or the collection of information from offerors, contractors, or members of the public which require the approval of the Office of Management and Budget (OMB) under 44 U.S.C. 501 *et seq.*

D. Small Business Regulatory Enforcement Fairness Act

This final rule is also exempt from congressional review prescribed under 5 U.S.C. 801 since it relates solely to agency management and personnel.

List of Subjects in 41 CFR Part 101–47

Administrative practice and procedure, Government property management, Homeless, Surplus Government property.

For the reasons stated in the preamble, 41 CFR part 101–47 is amended as follows:

Corrections

Federal Register
Vol. 64, No. 113
Monday, June 14, 1999

This section of the FEDERAL REGISTER contains editorial corrections of previously published Presidential, Rule, Proposed Rule, and Notice documents. These corrections are prepared by the Office of the Federal Register. Agency prepared corrections are issued as signed documents and appear in the appropriate document categories elsewhere in the issue.

DEPARTMENT OF COMMERCE

National Oceanic and Atmospheric Administration

50 CFR Parts 600 and 660

[Docket No 981231333-9127-03; I.D. 122898E]

RIN 0648-AM12

Fisheries Off West Coast States and in the Western Pacific; Pacific Coast Groundfish Fishery; Final 1999 ABC, OY, and Tribal and Nontribal Allocations for Pacific Whiting

Correction

In rule document 99–13037, beginning on page 27928, in the issue of Monday, May 24, 1999, make the following correction:

On page 27933, in the first column, in the fifth line "42″" should read "42°".

[FR Doc. C9–13037 Filed 6–11–99; 8:45 am]

BILLING CODE 1505–01–D

FEDERAL MINE SAFETY AND HEALTH REVIEW COMMISSION

29 CFR Part 2704

Implementation of Amendments to the Equal Access to Justice Act in Commission Proceedings

Correction

In rule document 98–29680 beginning on page 63172 in the issue of Thursday, November 12, 1998, make the following correction:

On page 63176, second column, amendatory instruction six is corrected to read as follows:

"6. Section 2704.106(b) is revised to read as follows:".

[FR Doc. C8–29680 Filed 6–11–99; 8:45 am]

BILLING CODE 1505–01–D

ENVIRONMENTAL PROTECTION AGENCY

40 CFR Part 63

[FRL-6344-7]

RIN 2060-AE-86

National Emission Standards for Hazardous Air Pollutants for Polyether Polyols Production

Correction

In rule document 99–12479, beginning on page 29420 in the issue of Tuesday, June 1, 1999, make the following corrections:

§ 63.1427 [Corrected]

On page 29457, in the second column, in § 63.1427(e)(2), Equation 11 should be set out before "Where:" as set forth below:

$$R_{batchcycle} = \left[1 - \frac{P_{epox,f}}{P_{epox,i}}\right] * 100 \qquad \text{[Equation 11]}$$

[FR Doc. C9–12479 Filed 6–11–99; 8:45 am]

BILLING CODE 1505–01–D

ENVIRONMENTAL PROTECTION AGENCY

40 CFR Part 63

[FRL-6347-2]

RIN 2060-AE78

National Emission Standards for Hazardous Air Pollutants for Source Categories; Portland Cement Manufacturing Industry

AGENCY: Environmental Protection Agency (EPA).

ACTION: Final rule.

SUMMARY: This action promulgates national emission standards for hazardous air pollutants (NESHAP) for new and existing sources in the portland cement manufacturing industry. This action also adds Method 320 for the measurement of vapor phase organic and inorganic emissions by extractive Fourier Transform Infrared (FTIR) spectroscopy and Method 321 for the measurement of gaseous hydrogen chloride emissions from portland cement kilns by FTIR spectroscopy to appendix A of part 63.

Some of the hazardous air pollutants (HAPs) released from portland cement manufacturing facilities include, but are not limited to, acetaldehyde, arsenic, benzene, cadmium, chromium, chlorobenzene, dibenzofurans, formaldehyde, hexane, hydrogen chloride, lead, manganese, mercury, naphthalene, nickel, phenol, polycyclic organic matter, selenium, styrene, 2,3,7,8-tetrachlorodibenzo-p-dioxin, toluene, and xylenes. Exposure to these HAPs can cause reversible or irreversible health effects including carcinogenic, respiratory, nervous system, developmental, reproductive and/or dermal health effects. The EPA estimates that this final rule will reduce nationwide emissions of HAPs from portland cement manufacturing facilities by approximately 82 megagrams per year (Mg/yr) [90 tons per year (tpy)], and particulate matter (PM) by approximately 4,700 Mg/yr (5,200 tpy).

These standards implement section 112(d) of the Clean Air Act (CAA) and are based on the Administrator's determination that portland cement manufacturing facilities may reasonably be anticipated to emit several of the 188 HAPs listed in section 112(b) of the CAA from the various process operations found within the industry. The final rule provides protection to the public by requiring portland cement manufacturing plants to meet emission standards reflecting the application of the maximum achievable control technology (MACT).

EFFECTIVE DATE: June 14, 1999. See the **SUPPLEMENTARY INFORMATION** section concerning judicial review.

ADDRESSES: *Docket.* Docket No. A-92-53, containing information considered by the EPA in development of the promulgated standards, is available for public inspection between 8:00 a.m. to 5:30 p.m., Monday through Friday, except Federal holidays, at the following address: U.S. Environmental Protection Agency, Air and Radiation Docket and Information Center (6102), 401 M Street S.W., Washington, DC 20460, telephone number (202) 260-7548. The docket is located at the above address in room M-1500, Waterside Mall (ground floor). A reasonable fee may be charged for copying docket materials.

FOR FURTHER INFORMATION CONTACT: For further information concerning applicability and rule determinations, contact the appropriate State or local agency representative. If no State or local representative is available, contact the EPA Regional Office staff listed in the Supplementary Information section of this preamble. For information concerning the analyses performed in developing this rule, contact Mr. Joseph Wood, P. E., Minerals and Inorganic Chemicals Group, Emission Standards Division (MD-13), Office of Air Quality Planning and Standards, U.S. EPA, Research Triangle Park, North Carolina 27711, telephone number (919) 541-5446, facsimile number (919) 541-5600, electronic mail address "wood.joe@epamail.epa.gov". For information regarding Methods 320 and 321 contact Ms. Rima Dishakjian, Emission Measurement Center, Emissions, Monitoring and Analysis Division (MD-19), U.S. Environmental Protection Agency, Research Triangle Park, NC 27711, telephone number (919) 541-0443.

SUPPLEMENTARY INFORMATION:

Regulated entities. Entities potentially regulated by this action are those that manufacture portland cement. Regulated categories and entities shown in Table 1.

TABLE 1.—REGULATED ENTITIES

Category	NAICS Code	SIC Code	Examples of Regulated Entities
Industry	32731	3241	Owners or operators of portland cement manufacturing plants.
State	32731	3241	Owners or operators of portland cement manufacturing plants.
Tribal associations	32731	3241	Owners or operators of portland cement manufacturing plants.
Federal agencies	(1)	(1)	None.

[1] None.

This table is not intended to be exhaustive, but rather provides a guide for readers regarding entities likely to be regulated by this action. This table lists the types of entities that the EPA is now aware could potentially be regulated by this action. To determine whether your facility, company, business organization, etc. is regulated by this action, you should carefully examine the applicability criteria in § 63.1340 of the rule. If you have questions regarding the applicability of this action to a particular entity, consult the appropriate regional representative:

Region I—Janet Bowen, Office of Ecosystem Protection, U.S. EPA, Region I, CAP, JFK Federal Building, Boston, MA 02203, (617) 565-3595.

Region II—Kenneth Eng, Air Compliance Branch Chief, U.S. EPA, Region II, 290 Broadway, New York, NY 10007-1866 (212) 637-4000.

Region III—Bernard Turlinski, Air Enforcement Branch Chief, U.S. EPA, Region III (3AT10), 841 Chestnut Building, Philadelphia, PA 19107, (215) 566-2110.

Region IV—Lee Page, Air Enforcement Branch, U.S. EPA, Region IV, Atlanta Federal Center, 61 Forsyth Street, Atlanta, GA 30303-3104, (404) 562-9131.

Region V—George T. Czerniak, Jr., Air Enforcement Branch Chief, U.S. EPA, Region V (5AE-26), 77 West Jackson Street, Chicago, IL 60604, (312) 353-2088.

Region VI—John R. Hepola, Air Enforcement Branch Chief, U.S. EPA,

Region VI, 1445 Ross Avenue, Suite 1200, Dallas, TX 75202-2733, (214) 665-7220.

Region VII—Donald Toensing, Chief, Air Permitting and Compliance Branch, U.S. EPA, Region VII, 726 Minnesota Avenue, Kansas City, KS 66101, (913) 551-7446.

Region VIII—Douglas M. Skie, Air and Technical Operations Branch Chief, U.S. EPA, Region VIII, 999 18th Street, Suite 500, Denver, CO 80202-2466, (303) 312-6432.

Region IX—Barbara Gross, Air Compliance Branch Chief, U.S. EPA, Region IX, 75 Hawthorne Street, San Francisco, CA 94105, (415) 744-1138.

Region X—Anita Frankel, Air and Radiation Branch Chief, U.S. EPA, Region X (AT-092), 1200 Sixth Avenue, Seattle, WA 98101-1128, (206) 553-1757.

Judicial Review. The NESHAP for portland cement manufacturing was proposed on March 24, 1998 (63 FR 14182). Today's **Federal Register** action announces the EPA's final decision on the rule. Under section 307(b)(1) of the Act, judicial review of the final rule is available by filing a petition for review in the U.S. Court of Appeals for the District of Columbia Circuit within 60 days of today's publication of this final rule. Under section 307(b)(2) of the Act, the requirements that are the subject of today's notice may not be challenged later in civil or criminal proceedings brought by the EPA to enforce these requirements.

Technology Transfer Network. In addition to being available in the docket, an electronic copy of today's document, which includes the regulatory text, is available through the Technology Transfer Network (TTN) at the Office of Air and Radiation Policy and Guidance website. Following promulgation, a copy of the rule will be posted at the TTN's policy and guidance page for newly proposed or promulgated rules (http://www.epa.gov/ttn/oarpg/t3pfpr.html). A copy of the Response to Comments document for this rule will be posted on the TTN at http://www.epa.gov/ttn/oarpg/t3bid.html. The TTN provides information from EPA in various areas of air pollution technology or policy. If more information on the TTN is needed, call the TTN help line at (919) 541-5384.

Outline. The following outline is provided to aid in reading this preamble to the final rule.

I. Statutory Authority
II. Background and Public Participation
III. Summary of Final Rule
A. Applicability
B. Emission Limits and Operating Limits
C. Performance Test Provisions
D. Monitoring Requirements
E. Notification, Recordkeeping, and Reporting Requirements
IV. Summary of Changes Since Proposal
A. Designation of Affected Sources
B. Definitions
C. Emission Standards and Operating Limits
D. Performance Test Requirements
E. Monitoring Requirements
F. Additional Test Methods
G. Reporting
H. Exemption from New Source Performance Standards
I. Delegation of Authority
J. Test Methods 320, 321, and 322
V. Summary of Impacts
A. Air Quality Impacts
B. Water Impacts
C. Solid Waste Impacts
D. Energy Impacts
E. Nonair Health and Environmental Impacts
F. Cost Impacts
G. Economic Impacts
VI. Summary of Responses to Major Comments
VII. Administrative Requirements
A. Docket
B. Executive Order 12866
C. Executive Order 12875: Enhancing Intergovernmental Partnerships
D. Unfunded Mandates Reform Act
E. Regulatory Flexibility Act
F. Submission to Congress and the General Accounting Office
G. Paperwork Reduction Act
H. Pollution Prevention Act
I. National Technology Transfer and Advancement Act
J. Executive Order 13045
K. Executive Order 13084: Consultation and Coordination with Indian Tribal Governments

I. Statutory Authority

The statutory authority for this rule is provided by sections 101, 112, 113, 114, 116, and 301 of the Clean Air Act, as amended (42 U.S.C. 7401, 7412, 7413, 7414, 7416, and 7601). This rule is also subject to section 307(d) of the CAA (42 U.S.C. 7407(d)).

II. Background and Public Participation

The Clean Air Act was created in part "to protect and enhance the quality of the Nation's air resources so as to promote the public health and welfare and the productive capacity of its population." (Clean Air Act, section 101(b)(1)) Section 112(b), as revised in 61 FR 30816 (June 18, 1996), lists 188 HAPs believed to cause adverse health or environmental effects. Section 112(d) requires that emission standards be promulgated for all categories and subcategories of "major" sources of these HAP and for "area" sources listed for regulation, pursuant to section 112(c). Major sources are defined as those that emit or have the potential to emit (from all emission points in all source categories within the facility) at least 10 tons per year of any single HAP or 25 tons per year of any combination of HAP. Area sources are stationary sources of HAP that are not major sources.

On July 16, 1992 (57 FR 31576), the EPA published a list of categories of sources slated for regulation. This list included the portland cement source category regulated by the standards being promulgated today. The statute requires emissions standards for the listed source categories to be promulgated between November 1992 and November 2000. On June 4, 1996, the EPA published a schedule for promulgating these standards (61 FR 28197). Standards for the portland cement manufacturing source category covered by this rule were proposed on March 24, 1998 (63 FR 14182).

As in the proposal, the final standards give existing sources 3 years from the date of promulgation to comply. New sources are required to comply with the standard upon initial startup. The EPA believes these standards to be achievable for affected sources within the time provided.

Operating limits, methods for determining initial compliance, as well as monitoring, recordkeeping, and reporting requirements are included in the final rule. All of these components are necessary to ensure that sources will comply with the standards both initially and over time. However, the EPA has made every effort to simplify the requirements in the rule.

The amended Clean Air Act requires the EPA to promulgate national emission standards for sources of HAPs. Section 112(d) provides that these standards must reflect:

"* * * the maximum degree of reduction in emissions of the HAP * * * that the Administrator, taking into consideration the cost of achieving such emission reduction, and any nonair quality health and environmental impacts and energy requirements, determines is achievable for new or existing sources in the category or subcategory to which such emission standard applies * * *" [42 U.S.C. 7412(d)(2)].

This level of control is referred to as MACT. The Clean Air Act goes on to establish the least stringent level of control for MACT; this level is termed the "MACT floor."

For new sources, the standards for a source category or subcategory "shall not be less stringent than the emission control that is achieved in practice by the best controlled similar source, as determined by the Administrator" [section 112(d)(3)]. Existing source

standards shall be no less stringent than the average emission limitation achieved by the best performing 12 percent of the existing sources for source categories and subcategories with 30 or more sources, or the average emission limitation achieved by the best performing 5 sources for sources or subcategories with fewer than 30 sources [section 112(d)(3)]. These two minimum levels of control define the MACT floor for new and existing sources.

The standards were proposed in the **Federal Register** on March 24, 1998 (63 FR 14182). The preamble for the proposed standards described the rationale for the proposed standards. Public comments were solicited at the time of proposal. To provide interested individuals the opportunity for oral presentation of data, views, or arguments concerning the proposed standards, a public hearing was offered at proposal. However, the public did not request a hearing and, therefore, one was not held. The public comment period, which was extended by thirty days in response to requests from commenters, was from March 24, 1998 to June 26, 1998. A total of 28 comment letters were received. Commenters included industry representatives, State and local agencies, and environmental groups. Today's final rule reflects the EPA's full consideration of all of the comments. These public comments along with the EPA's responses to comments on the proposed rule are summarized in this preamble. A more detailed discussion of public comments and the EPA's responses can be found in the Response to Comment Document (Docket No. A-92-53, Item V-C-1).

III. Summary of Final Rule

A. Applicability

The standards apply to each portland cement manufacturing plant at any facility which is a major source or an area source, with the following exception. Some portland cement plants fire hazardous wastes in the kiln to provide part or all of the fuel requirement for clinker production. Portland cement kilns and in-line kiln/raw mills subject to the NESHAP for hazardous waste combustors (HWC), 40 CFR 63, subpart EEE, are not subject to this standard; however other affected sources at portland cement plants where hazardous waste is burned in the kiln are subject to this standard. HW kilns and HW in-line kiln/raw mills that temporarily or permanently stop burning hazardous waste may be subject to the emission standards, notification, testing, and monitoring requirements of today's rule, as provided by subpart EEE of this part.

Except for hazardous waste burning (HW) cement kilns and HW in-line kiln/raw mills, these standards apply to all cement kilns and in-line kiln/raw mills regardless of the material being combusted in the kiln. Currently, cement kilns which combust municipal solid waste, medical waste, or other waste materials (other than HW) are subject to today's rule. Since these devices currently are not subject to section 129 standards, EPA is including them in this rule to avoid a situation where they aren't regulated at all. This measure, however, is potentially an interim step. EPA could determine that cement kilns combusting solid waste materials should be regulated under section 129 of the Clean Air Act, 42 U.S.C. § 7429, and if so, EPA would revise the applicability section of these regulations accordingly at the time section 129 regulations applicable to cement kilns are promulgated.

EPA also considered but rejected the possibility of subcategorizing cement kilns based on the nature of feed preparation for the kiln. As discussed in the proposal preamble, there are two types of portland cement manufacturing processes differentiated on the basis of feed preparation: wet process, and dry process (which includes the long kiln dry process, preheater process, and preheater/precalciner process). The wet process kilns and all variations of the dry process kilns use the same raw materials and use the same types of air pollution controls. Therefore, if subcategories were defined based on process type, the MACT floor technology would be identical (docket item II-B-73). For this reason, the EPA is not promulgating separate rules based on process (kiln) type.

For portland cement plants with on-site non-metallic minerals processing facilities, the first affected source in the sequence of materials handling operations subject to this NESHAP is the raw material storage, which is just prior to the raw mill. The primary and secondary crushers and any other equipment in the non-metallic minerals processing plant, which precede the raw material storage are not affected sources under this NESHAP. The first conveyor system transfer point subject to this NESHAP is the transfer point associated with the conveyor transferring material from the raw material storage to the raw mill.

This regulation does not apply to the emissions from cement kiln dust (CKD) storage facilities (e.g., CKD piles or landfills). A separate rulemaking will be forthcoming utilizing RCRA authority that will apply to air emissions associated with CKD management and disposal facilities.

B. Emission Limits and Operating Limits

In today's notice, the EPA is establishing emission limitations for particulate matter (as a surrogate for HAP metals), dioxins/furans (D/F), and total hydrocarbons (as a surrogate for organic HAPs, including polycyclic organic matter). The NESHAP for portland cement manufacturing applies to both major and area sources of HAPs. The affected sources for which emission limits are established include the non-hazardous waste (NHW) kiln, NHW in-line kiln/raw mill, clinker cooler, raw material dryer, and materials handling processes that include the raw mill, finish mill, raw material storage, clinker storage, finished product storage, conveyor transfer points, bagging and bulk loading and unloading systems (hereafter referred to as materials handling processes).

The NESHAP limits PM (surrogate for HAP metals) emissions, as well as opacity, from new and existing NHW kilns, NHW in-line kiln/raw mills, and clinker coolers, and limits opacity from raw material dryers and materials handling processes, at portland cement plants which are major sources. The rule also limits D/F emissions from new and existing NHW kilns and NHW in-line kiln/raw mills located at portland cement plants which are major or area sources of HAPs. In addition, the rule limits total hydrocarbon (THC) as a surrogate for organic HAP emissions from new greenfield NHW kilns, new greenfield NHW in-line kiln/raw mills, and new greenfield raw material dryers at portland cement plants which are major or area sources. Tables 2 and 3 present a summary of the emission limits for new and existing portland cement affected sources.

TABLE 2.—SUMMARY OF EMISSION LIMITS[a,b] FOR AFFECTED SOURCES AT PORTLAND CEMENT PLANTS

(Metric units)

Affected source and pollutant	Emission limit for existing sources	Emission limit for new sources
NHW kiln and NHW in-line kiln/raw mill[c] PM	0.15 kg/Mg dry feed[e] and opacity level[e,c] no greater than 20 percent	0.15 kg/Mg dry feed[e] and opacity level[e,c] no greater than 20 percent
NHW kiln and NHW in-line kiln/raw mill D/F[c,d]	0.2 ng TEQ/dscm or 0.4 ng TEQ/dscm with PM control device operated at ≤204°C[g]	0.2 ng TEQ/dscm or 0.4 ng TEQ/dscm with PM control device operated at ≤204°C[g]
NHW kiln and NHW in-line kiln/raw mill THC[d]	none	50 ppmvd[f] (as propane)
Clinker cooler PM	0.05 kg/Mg dry feed and opacity level no greater than 10 percent	0.05 kg/Mg dry feed and opacity level no greater than 10 percent
Raw material dryer and materials handling processes (raw mill system, finish mill system, raw material storage, clinker storage, finished product storage, conveyor transfer points, bagging, and bulk loading and unloading systems) PM.	10 percent opacity	10 percent opacity
Raw material dryer THC[d]	none	50 ppmvd[f] (as propane)

[a] All concentration limits at 7 percent oxygen.
[b] Applies to major sources only, except as noted.
[c] Includes main and alkali bypass stacks.
[d] Applies to both major and area source portland cement plants.
[e] If there is an alkali bypass stack associated with the kiln or in-line kiln/raw mill, the combined PM emission from the kiln or in-line kiln/raw mill and the alkali bypass must be less than 0.15 kg/Mg dry feed.
[f] Applies only to new greenfield affected sources.
[g] The average temperature of the test run averages during performance test must be less than or equal to 204 degrees C.

TABLE 3.—SUMMARY OF EMISSION LIMITS[a,b] FOR AFFECTED SOURCES AT PORTLAND CEMENT PLANTS

(English units)

Affected source and pollutant	Emission limit for existing sources	Emission limit for new sources
NHW kiln and NHW in-line kiln/raw mill[c] PM	0.30 lb/ton dry feed[e] and opacity level[e] no greater than 20 percent	0.30 lb/ton dry feed[e] and opacity level[e] no greater than 20 percent
NHW kiln and NHW in-line kiln/raw mill D/F[c,d]	8.7×10^{-11} gr TEQ/dscf or 1.7×10^{-10} gr TEQ/dscf with PM control device operated at ≤400°F[g]	8.7×10^{-11} gr TEQ/dscf or 1.7×10^{-10} gr TEQ/dscf with PM control device operated at ≤400°F[g]
NHW kiln and NHW in-line kiln/raw mill THC[d]	none	50 ppmvd[f] (as propane)
Clinker cooler PM	0.10 lb/ton dry feed and opacity level no greater than 10 percent	0.10 lb/ton dry feed and opacity level no greater than 10 percent
Raw material dryer and materials handling processes (raw mill system, finish mill system, raw material storage, clinker storage, finished product storage, conveyor transfer points, bagging, and bulk loading and unloading systems) PM.	10 percent opacity	10 percent opacity
Raw material dryer THC[d]	none	50 ppmvd[f] (as propane)

[a] All concentration limits at 7 percent oxygen.
[b] Applies to major sources only, except as noted.
[c] Includes main and alkali bypass stacks.
[d] Applies to both major and area source portland cement plants.
[e] If there is an alkali bypass stack associated with the kiln or in-line kiln/raw mill, the combined PM emission from the kiln or in-line kiln/raw mill and the alkali bypass must be less than 0.30 lb/ton dry feed.
[f] Applies only to new greenfield affected sources.
[g] The average temperature of the test run averages during performance test must be less than or equal to 400 degrees F.

The NESHAP imposes operating limits on affected sources that are subject to D/F emission limits. These operating limits are summarized in Table 4.

TABLE 4.—SUMMARY OF OPERATING LIMITS FOR AFFECTED SOURCES AT PORTLAND CEMENT PLANTS

Affected Source/Pollutant	Pollutant	Operating Limits
All kilns and in-line kiln raw mills at major and area sources (including alkali bypasses).	D/F	Operate such that the 3-hour rolling average particulate matter control device (PMCD) inlet temperature is no greater than temperature established at performance test. Operate such that the three-hour rolling average activated carbon injection rate is no less than the rate established at performance test (if applicable). Operate such that the three-hour rolling average activated carbon injection nozzle pressure drop or carrier fluid flow rate is no less than that specified by manufacturer (if applicable).

The rule requires the owner or operator to operate such that the temperature at the inlet to the kiln or in-line kiln raw mill particulate matter control device (PMCD) is at a level no greater than the level established during the successful Method 23 performance test. The three-hour rolling average temperature limit is established by taking the average of the one-minute average temperatures for each test run conducted during the successful Method 23 performance test, then averaging each test run average. Further, sources may petition the Administrator for an alternate averaging period or method for establishing operating parameter limits.

Owners or operators of in-line kiln/raw mills are required to establish separate PMCD inlet temperatures applicable to periods when the raw mill is operating and periods when the raw mill is not operating. The appropriate "raw mill operating status dependent" PMCD inlet temperature shall not be exceeded. Owners or operators of kilns or in-line kiln/raw mills equipped with alkali bypasses are required to establish a separate temperatures for the inlet to the kiln or in-line kiln raw mill PMCD and the kiln or in-line kiln/raw mill alkali bypass PMCD. The applicable temperature limit for the alkali bypass is established during the performance test in which the raw mill is operating.

After a transition period in which the status of the raw mill was changed from "off" to "on" or from "on" to "off", compliance with the operating limits for the new mode of operation begins, and the three-hour rolling average is established anew, i.e., without considering previous recordings.

If carbon injection is used for D/F control, the carbon injection system must be operated such that the carbon injection rate shall be maintained at a level equaling or exceeding the rate which existed during the successful Method 23 performance test. The three-hour rolling average carbon injection rate limit is established in the same way as the temperature limit, as described above. The injection nozzle pressure drop or carrier fluid flow rate must also be monitored, and the minimum levels for these parameters are established based on manufacturers specifications. The nozzle pressure drop or carrier fluid flow rate is monitored with a 3-hour rolling averaging period.

C. Performance Test Provisions

A performance test is required to demonstrate initial compliance with each applicable numerical limit. The rule requires the owner or operator to use EPA Method 5, "Determination of Particulate Emissions from Stationary Sources" to measure PM emissions from kilns, in-line kiln/raw mills and clinker coolers. These tests will be repeated every 5 years. Kilns and in-line kiln/raw mills equipped with alkali bypasses are required to meet the particulate standard based on combined emissions from the kiln exhaust and the alkali bypass. Owners or operators of in-line kiln/raw mills are required to conduct a Method 5 performance test while the raw mill is operating and a separate Method 5 performance test while the raw mill is not operating. In conducting the Method 5 tests, a determination of the particulate matter collected in the impingers ("back half") of the particulate sampling train is not required to demonstrate initial compliance with the standard, however the permitting authority may require a "back half" for permitting, determination of emission fees, particulate matter monitoring or other purposes. Owners or operators are also required to determine the kiln or in-line kiln/raw mill dry feed rate, because the PM emission standards for kilns, in-line kiln/raw mills and clinker coolers are expressed as lb PM/ton (kg PM/Mg) dry feed.

The opacity exhibited during the period of the initial Method 5 performance test shall be determined, if feasible, through the use of a continuous opacity monitor (COM). Where the control device exhausts through a monovent or where the use of a COM in accordance with the installation specifications of EPA Performance Specification (PS)-1 of appendix B to 40 CFR part 60, is not feasible, EPA Method 9, "Visual Determination of the Opacity of Emissions from Stationary Sources" shall be used. Where the control device discharges through a fabric filter (FF) with multiple stacks or an electrostatic precipitator (ESP) with multiple stacks, the owner or operator has the option of conducting an opacity test in accordance with Method 9, in lieu of installing a COM.

The rule requires the owner or operator to use EPA Method 23, "Determination of Polychlorinated Dibenzo-p-dioxins and Polychlorinated Dibenzofurans from Stationary Sources" to measure D/F emissions from kilns and in-line kiln/raw mills. These D/F tests shall be repeated every 2 and one-half years. The temperature at the inlet to the particulate matter control device (PMCD) during the period of the Method 23 performance test shall be continuously recorded. One minute average temperatures must be calculated for each minute of each run of the test. The average of the one-minute averages must be calculated for each test run and included in the performance test report. The average of one-minute averages for each test run is averaged for all test runs, and this is the operating temperature limit not-to-be-exceeded by any 3-hour rolling average temperature during subsequent operations of the affected source. If carbon injection is used for D/F control, the carbon injection rate and other associated operating parameters must be measured during the period of each run of the Method 23 performance tests. The average carbon injection rate and other associated operating parameters measured for the three runs must be determined and included in the test report.

Owners or operators of in-line kiln/raw mills are required to conduct a Method 23 performance test, and record the temperature at the inlet to the PMCD

while the raw mill is operating, and a separate Method 23 performance test with PMCD inlet temperature recording while the raw mill is not operating. If applicable, the carbon injection rate shall be determined during both performance tests. Where applicable, the exhausts from both the kiln or in-line kiln/raw mill and the alkali bypass are required to meet the D/F standard.

The owner or operator is required to repeat the performance tests for opacity, PM, and D/F emissions from kilns and in-line kiln/raw mills within 90 days of any significant change in the raw material components or fuels fed to the kiln (e.g. when there is an increase in the input rate of municipal solid waste, tire-derived fuel, medical waste, or other solid wastes to the kiln or in-line kiln/raw mill, above the rate used in the previous performance test.) Under the standard, the owner or operator shall use a THC continuous emission monitor (CEM) to conduct a performance test of THC emissions from new greenfield kilns, new greenfield in-line kiln/raw mills, and new greenfield raw material dryers. Owners or operators of new greenfield in-line kiln/raw mills are required to demonstrate initial compliance by measuring THC emissions while the raw mill is operating and while the raw mill is not operating. The standard for THC does not apply to the exhaust from the alkali bypass of kilns or the alkali bypass of in-line kiln/raw mills, and these streams are not subject to a performance test for THC. Each THC CEM is required to be designed, installed, and operated in accordance with EPA Performance Specification (PS)–8A of 40 CFR part 60, appendix B.

Under the standard, the owner or operator shall use EPA Method 9, "Visual Determination of the Opacity of Emissions from Stationary Sources" to measure the opacity of gases discharged from raw mills, finish mills, raw material dryers and materials handling processes. These tests would be repeated every five years. A summary of performance test requirements is given in Table 5.

TABLE 5.—SUMMARY OF PERFORMANCE TEST REQUIREMENTS

Affected source and pollutant	Performance Test
New and existing NHW kiln and NHW in-line kiln/raw mill[b c] PM	EPA Method 5[a]
New and existing NHW kiln and NHW in-line kiln/raw mill[b c] Opacity	COM if feasible[d e] or EPA Method 9 visual opacity readings.
New and existing NHW kiln and NHW in-line kiln/raw mill[b c f g] D/F	EPA Method 23[i]
New greenfield NHW kiln and NHW in-line kiln/raw mill THC	THC CEM (EPA PS–8A)[h]
New and existing clinker cooler PM	EPA Method 5[a]
New and existing clinker cooler opacity	COM[d i] or EPA Method 9 visual opacity readings
New and existing raw and finish mill PM	EPA Method 9[a i]
New and existing raw material dryer and materials handling processes (raw material storage, clinker storage, finished product storage, conveyor transfer points, bagging, and bulk loading and unloading systems) PM.	EPA Method 9[a i]
New greenfield raw material dryer THC	THC CEM (EPA PS–8A)[h]

[a] Required initially and every 5 years thereafter.
[b] Includes main exhaust and alkali bypass.
[c] In-line kiln/raw mill to be tested with and without raw mill in operation.
[d] Must meet COM performance specification criteria. If the fabric filter or electrostatic precipitator has multiple stacks, daily EPA Method 9 visual opacity readings may be taken instead of using a COM.
[e] Opacity limit is 20 percent.
[f] Alkali bypass is tested with the raw mill on.
[g] Temperature parameters determined separately with and without the raw mill operating.
[h] EPA Performance Specification (PS)-8A of appendix B to 40 CFR part 60.
[i] Opacity limit is 10 percent.
[j] Required initially and every 2.5 years thereafter.

D. Monitoring Requirements

The owner or operator of each portland cement manufacturing plant shall prepare for each affected source subject to the rule, a written operations and maintenance plan. The plan shall be submitted to the Administrator for review and approval as part of the application for a part 70 permit. The operations and maintenance plan shall include procedures for proper operation and maintenance of the affected source and air pollution control devices in order to meet the emission limits of the rule. The operations and maintenance plan shall also include procedures to be used during an inspection of the components of the combustion system of each kiln and each in-line kiln/raw mill. This inspection must be conducted at least once per year. Additionally, the operations and maintenance plan shall include corrective action procedures for the raw mill and finish mill, and associated particulate matter control devices (PMCDs), which must be implemented when required by the rule. The operations and maintenance plan shall also include provisions for monitoring opacity from materials handling sources, and to conduct M. 9 tests if visible emissions are observed. (Further details of this are discussed in the preamble section "Summary of Changes Since Proposal".) Finally, failure to implement procedures consistent with the operations and maintenance plan will be a violation of this subpart.

The rule requires owners or operators to monitor the opacity of gases discharged from kilns, in-line kiln/raw mills, alkali bypasses and clinker coolers using a COM, if a COM can be feasibly installed in accordance with PS–1 of appendix B to 40 CFR part 60. Where it is not feasible to install a COM, e.g. where the control device discharges through a monovent, the owner or operator is required to monitor emissions by conducting daily Method 9 tests. Where the control device discharges through a FF with multiple stacks or an ESP with multiple stacks, the owner or operator has the option of conducting daily tests in accordance with Method 9, in lieu of installing a COM. The duration of the Method 9 tests is 30 minutes.

The rule requires that kilns and in-line kiln raw mills subject to the particulate matter (PM) standards must install, correlate, and operate PM continuous emission monitors (CEMs). However, the compliance date for

installing PM CEMs is deferred pending further rulemaking. Further discussion of this issue is found in the preamble sections "Summary of Changes Since Proposal" and "Summary of Responses to Major Comments."

The owner or operator of a kiln or in-line kiln raw mill must install, calibrate, maintain and continuously operate a device to monitor and record the temperature of the exhaust gases from the kiln, in-line kiln/raw mill, and/or alkali bypass (if applicable), at the inlet to or upstream of the kiln, in-line kiln/raw mill, and alkali bypass PMCD. The calibration of the thermocouple or other temperature sensor must be verified at least once every three months.

If activated carbon injection is used for D/F control, the owner or operator must install, operate, calibrate and maintain a device to continuously monitor and record the weight of activated carbon injected and record the weight in 1 minute rolling averages. The accuracy of the weight measurement device must be ± 1 percent of the weight being measured. The calibration of the device must be verified at least once every three months. The owner or operator must record the feeder setting at least once per day and determine the mass of carbon injected for every three-hour rolling average period. In addition, the carbon injection nozzle pressure drop or activated carbon carrier fluid flow rate must be monitored and recorded. Further, the activated carbon specifications must be the same as or better than the specifications of the carbon used during the previous performance test.

To clarify how the three-hour rolling average is calculated at initial start-up, operating parameter limits will not become effective on the compliance date until enough data have been accumulated to calculate the rolling average for the limit. For example, given that compliance with the standards begins nominally at 12:01 am on the compliance date, the three-hour rolling average temperature limit does not become effective as a practical matter until 3:01 am on the compliance date. This approach is adopted for all continuous monitoring systems, including CEMs.

During intermittent operations, however, periods of time when operating parameters are not recorded for any reason (e.g., source shutdown) are to be ignored when calculating rolling averages. For example, consider how the three-hour rolling average for a parameter would be calculated if a source shuts down for yearly maintenance for a three week period. The first one-minute average value recorded for the parameter for the first minute of renewed operations is added to the last 179 one-minute averages before the source shut down, to calculate the three-hour rolling average. This approach is adopted for all continuous monitoring systems, including CEMs. This approach would inhibit a source from intentionally interrupting the monitoring system to avoid unwanted parameter values.

The rule requires the owner or operator to monitor THC emissions from the main exhaust of greenfield kilns; the main exhaust of greenfield in-line kiln/raw mills; and greenfield raw material dryers using a CEM installed in accordance with PS–8A in 40 CFR part 60, appendix B.

The rule requires the owner or operator to monitor the opacity from raw mills and finish mills by conducting a daily six-minute test in accordance with Method 22, "Visual Determination of Fugitive Emissions from Material Sources and Smoke Emissions from Flares."

Owners or operators of raw mills and finish mills are required to initiate corrective action within one hour of a Method 22 test during which visible emissions are observed. A 30-minute Method 9 opacity test must be started within 24 hours of observing visible emissions.

A summary of monitoring requirements is given in Table 6.

TABLE 6.—SUMMARY OF MONITORING REQUIREMENTS

Affected source and pollutant or opacity	Monitor/Type/Operation/Process	Monitoring requirement
All affected sources	Operations and maintenance plan	Prepare written plan for all affected sources and control devices.
All kilns and in-line kiln raw mills at major sources (including alkali bypass)/opacity.	COM, if applicable	Install, calibrate, maintain and operate in accordance with general provisions and with PS–1.
	Method 9 opacity test, if applicable	Daily test of at least 30-minutes, while kiln is at highest load or capacity level.
All kilns and in-line kiln raw mills at major sources (including alkali bypass)/PM.	PM CEM	The compliance date is deferred until a future rulemaking, at which time EPA will consider what performance specification requirements should be established.
All kilns and in-line kiln raw mills at major and area sources (including alkali bypass)/D/F.	Combustion system inspection	Conduct annual inspection of components of combustion system.
	Continuous temperature monitoring at PMCD inlet.	Install, operate, calibrate and maintain continuous temperature monitoring and recording system; calculate 3-hour rolling average; verify temperature sensor calibration at least quarterly.
	Activated carbon injection rate, nozzle pressure drop or carrier fluid flow rate, and carbon type/brand, if applicable.	Install, operate, calibrate and maintain continuous activated carbon injection rate monitor; verify calibration at least quarterly; record feeder setting daily; calculate average injection rate for each 3-hour rolling average. Monitor nozzle pressure drop or carrier fluid flow rate according to manufacturers specifications, and calculate rolling 3-hour averages.
New greenfield kilns and in-line raw mills at major and area sources/THC.	THC CEM	Install, operate, and maintain THC CEM in accordance with PS–8A; calculate 30-day block average THC concentration.
All clinker coolers at major sources/opacity.	COM, if applicable	Install, calibrate, maintain and operate in accordance with general provisions and with PS–1.
	Method 9 opacity test, if applicable	Daily test of at least 30-minutes, while kiln is at highest load or capacity level.

TABLE 6.—SUMMARY OF MONITORING REQUIREMENTS—Continued

Affected source and pollutant or opacity	Monitor/Type/Operation/Process	Monitoring requirement
All materials handling operations (MHO) at major sources/opacity.	M. 22 visible emissions test as part of operations and maintenance plan.	For each MHO, conduct monthly 1-minute Method 22 visible emissions test; if visible emissions are observed, initiate corrective action within one hour and conduct 30-minute Method 9 test within 10 minutes. For each MHO, if no visible emissions are observed after first 6 months, reduce monitoring to semi-annual. If no VE are observed thereafter, reduce monitoring to annual basis. If VE are observed for a MHO, revert back to conducting VE tests on a monthly basis.
All raw mills and finish mills at major sources/opacity.	Method 22 visible emissions test ..	Conduct daily 6-minute Method 22 visible emissions test while mill is operating at highest load or capacity level; if visible emissions are observed, initiate corrective action within one hour and conduct 30-minute Method 9 test within 24 hours.
New greenfield raw material dryers at major and area sources/THC.	THC CEM	Install, operate, and maintain THC CEM in accordance with PS–8A; calculate 30-day block average THC concentration.

E. Notification, Recordkeeping, and Reporting Requirements

All notification, recordkeeping, and reporting requirements in the general provisions (40 CFR part 63, subpart A) apply to portland cement manufacturing plants. These include: (1) Initial notification(s) of applicability, notification of performance test, and notification of compliance status; (2) a report of performance test results; (3) a startup, shutdown, and malfunction plan with semiannual reports of reportable events (if they occur); and (4) semiannual reports of excess emissions. If excess emissions are reported, the owner or operator shall report quarterly until a request to return the reporting frequency to semiannual is approved.

The NESHAP general provisions (40 CFR part 63, subpart A) require that records be maintained for at least 5 years from the date of each record. The owner or operator must retain the records onsite for at least 2 years but may retain the records offsite the remaining 3 years. The files may be retained on microfilm, microfiche, on a computer disk, or on magnetic tape. Reports may be made on paper or on a labeled computer disk using commonly available and compatible computer software.

IV. Summary of Changes Since Proposal

In response to comments received on the proposed standards, changes have been made to the final standards. These changes include clarifications designed to make the EPA's intent clearer as well as changes to the requirements of the proposed standards. A summary of the substantive changes made since the proposal is given in the following sections, along with the rationales for these changes. Further details on the rationales for these changes can be found in Section VI of the preamble: Summary of Responses to Major Comments.

A. Designation of Affected Sources

The section of the rule on designated affected sources is being clarified to include new greenfield raw material dryers that are located at facilities that are area sources. The EPA is clarifying today that these affected sources are subject to limitations on THC. The preamble for the proposed rule stated that polycyclic organic matter (POM) emissions (using THC as a surrogate) from portland cement NHW kiln area sources would be subject to MACT standards under EPA's interpretation of section 112(c)(6). The EPA proposed to use THC as a surrogate for organic HAPs, and today it is clarifying that POM is an organic HAP for which THC is a surrogate. Since POM was a listed HAP from portland cement NHW cement kilns (at both area and major source portland cement plants) in the section 112(c)(6) listing (63 FR 17838, April 10, 1998), the EPA is clarifying that the limitation of emissions of THC applies to new greenfield cement kilns, in-line kiln raw mills and raw material dryers at major and area source cement plants in the portland cement industry. Further discussion of this change is found below in the discussion of standards.

B. Definitions

The definitions of "alkali bypass" and "feed" have been expanded to reflect cement industry practices. Definitions of "greenfield" and new "brownfield" affected sources have been added to the final rule to clarify the applicability of the final THC standards to specific affected sources. A definition of "one-minute average" has been added to clarify the monitoring provisions of the final rule. A definition of rolling average has been added to clarify and maintain consistency with the requirements for HW kilns.

C. Emission Standards and Operating Limits

Based on comments received, the EPA is clarifying today that the THC limitation applicable to new kilns, new in-line kiln/raw mills, and new raw material dryers is restricted to greenfield sources, in recognition of the difficulty that owners or operators of reconstructed and new brownfield affected sources might have in obtaining suitable kiln feed materials while remaining competitive. The selection of a site tied to feed materials with relatively low levels of naturally occurring organic matter is the basis for the MACT standard and is an option only available to greenfield sources. Further, as discussed above, the EPA is clarifying that this THC limitation applies to new greenfield kilns, new greenfield in-line kiln/raw mills, and greenfield raw material dryers located at facilities that are area, as well as major, sources.

The requirements in the proposal for initiating a site-specific operating and maintenance plan, and implementation of a quality improvement plan, due to stipulated exceedences of a 15 percent kiln opacity limit, have been removed. The EPA agrees with commenters who questioned this tiered approach, and so the final rule will retain only a 20 percent opacity limit for the kiln and in-line kiln/raw mill.

In response to a comment, the EPA is clarifying that the opacity limitation on gases discharged from raw mills and finish mills is restricted to the mill sweep and air separator air pollution control devices. This is consistent with the MACT floor technology for control of gases from these affected sources.

The final rule has been reformatted to provide a separate section for operating

limits. Control of temperature at the inlet to kiln and in-line kiln/raw mill PMCDs and control of the activated carbon injection parameters (if applied as a D/F control technique) are provisions promulgated as operating limits.

The averaging period for the operating limit for the inlet kiln and in-line kiln/raw mill PM control device temperature (to demonstrate compliance with the D/F emission limits) has been changed from a 9-hour block average period to a three-hour rolling average period. Comments were received that the averaging period should be shorter. In addition, the rule has been clarified to include data reduction procedures to be followed to demonstrate compliance. Furthermore, sources may petition the Administrator for an alternate averaging period or method for establishing operating parameter limits.

The provisions for establishing the PM control device inlet temperature limit based on the D/F performance test have been changed to correct an error in drafting the proposal. A commenter pointed out that the proposal would allow a source to conduct its D/F performance test with an inlet PM control device temperature below 400 degrees F, but after the performance test, the source would be allowed to operate its PM control device with an inlet temperature up to 400 degrees F. In drafting the proposal, the EPA did not intend to allow a source to operate its PM control device at a temperature higher than the temperature during the performance test, and so the EPA is clarifying today that the inlet temperature limit is established as and capped at the average temperature during the D/F performance test. To further achieve consistency with the D/F temperature requirements for HW kilns and to better assure that the standard reflects MACT, the EPA is dropping the proposed provision which would have allowed the temperature limit to be established as the average temperature during the performance test plus 25 degrees F if the D/F level was below 0.15 ng/dscm. To clarify and maintain consistency with the requirements for HW kilns (and to best implement standards representing MACT), if the source complies with the 0.4 ng TEQ/dscm D/F limit, the average temperature of the test run averages during the performance test must be below 400 degrees F. To further achieve consistency with the requirements for HW kilns, additional operating parameter limits associated with the use of activated carbon injection must be established and these parameters must be monitored continuously. The averaging period for the activated carbon injection rate and other operating parameters has been changed from a 9-hour period to a 3-hour rolling average period. Further details on the establishment of the temperature and other operating parameter limits are discussed in section VI. of this preamble.

D. Performance Test Requirements

In response to comment, the EPA is clarifying that both during the performance test and to demonstrate continuous compliance, opacity limitations for the kiln and clinker cooler must be met for each 6-minute block period. (The proposal incorrectly required a 30-minute averaging time.) This is consistent with the requirements of the NSPS, which is the basis for the MACT floor for PM/metals and opacity.

Based on comments received that there should be consistency with the requirements for HW kilns, the performance tests for D/F must be conducted every 2 and one-half years. (The proposal would have required that the D/F emissions tests be conducted every 5 years.) To further achieve consistency, and to assure that the kiln continues to achieve the requisite emissions reductions reflected in the standard, the EPA is also clarifying today that in addition to repeating performance tests every five years (or 2.5 years for the D/F performance tests), performance tests for kilns or in-line kiln/raw mills must be repeated within 90 days of initiating any significant change in the feed materials or fuels fed to the kilns (e.g., an increase in the input rate of municipal solid waste, tire-derived fuel, or medical waste to the kiln or in-line kiln/raw mill above the rate used in the previous performance test; or a switch from burning natural gas to coal). Such changes in fuel or feeds could result in changes to emissions.

E. Monitoring Requirements

In response to a comment, clarification has been added to the final rule to establish that any required Method 9 and Method 22 tests must be conducted while the affected source is operating at the highest load or capacity level reasonably expected to occur within the day that the test is performed.

The option for use of triboelectric bag leak detection systems for monitoring raw mill and finish mill fabric filter performance is not being promulgated at this time. Numerous commenters expressed concern regarding installation, operation, calibration and maintenance, and that the lack of clear-cut specifications would lead to open-ended liability for owners/operators. Those owners or operators who want to use bag leak detection systems may petition the Administrator for approval of alternative monitoring requirements under the General Provisions.

Requirements for temperature monitoring devices (including range and reference standard) have been added to the final rule. In response to a comment, monitoring requirements for activated carbon injection system accuracy, calibration frequency, and data recording and reduction have also been added to the final rule. To achieve consistency with the requirements for HW kilns, activated carbon injection nozzle pressure drop or carrier fluid flow rate, and carbon specifications, must also be monitored and recorded.

An explicit monitoring requirement for an inspection of the components of the combustion system of each kiln or in-line kiln/raw mill has been added to the rule. This inspection must be conducted at least once per year, in accordance with the procedures specified in the operation and maintenance plan for the affected source. This change was made in response to several comments that were received suggesting that provisions (such as limitations on and monitoring of carbon monoxide) be added to the final rule to ensure good combustion and thus minimize formation of D/F.

The operations and maintenance plan requirement has been changed to explain that the plan must also include provisions for observing opacity from materials handling sources, and for conducting a M. 9 test if visible emissions (VE) are observed. Specifically, materials handling sources' VE shall be monitored via M. 22 once per month. After 6 months without VE for each individual source, the monitoring frequency would be reduced to a semi-annual basis. If there are no VE in the next 6 month period for a particular source, the monitoring frequency would be reduced to an annual basis. If VE occurs during the annual inspection, the frequency would revert back to once per month. If VE are observed during one of these inspections, a Method 9 test is required. This change was made to provide greater assurance that these units are in compliance with the opacity limit and to meet the Agency's commitment to incorporate enhanced monitoring in all MACT standards.

Finally, the final rule is being clarified that failure to implement procedures consistent with the operations and maintenance plan will be a violation of this subpart.

In the preamble to the proposal, the EPA noted its intent to include a requirement for PM continuous emission monitors (CEMs) in the final rule, unless the analyses of new information and data showed that it is not appropriate. (See 63 FR at 14205). Based on successful testing on an incinerator, as well as extensive use of these monitors in Europe, EPA believes there is sound evidence the PM CEMs should work at cement kilns. Accordingly, the final rule contains a requirement to install PM CEMs. However, we are deferring the effective date of this requirement pending further testing and additional rulemaking. Please see the preamble section "Summary of Responses to Major Comments" for further details on this issue.

F. Additional Test Methods

The final rule has been changed to permit the use of either Method 320 or Method 321 for the determination of hydrogen chloride (HCl) for the purpose of making an applicability determination. These methods are being promulgated as part of this rulemaking.

Since proposal of Method 322 for the measurement of HCl along with the portland cement NESHAP, the EPA attempted to utilize Method 322 to gather data from lime kilns (which have a matrix similar to portland cement sources) and encountered technical problems with the gas filter correlation infrared spectroscopy (GFCIR). Many of these problems were adequately identified by the data quality indicators in the method. However, as a backup option, the Agency collected data sets at lime kilns using both GFCIR and Fourier transform infrared spectroscopy (FTIR). These paired data sets provide unexpected contradictory results.

The dynamic spiking results of the GFCIR would indicate that Method 322 results should be biased by overpredicting the true value (the spike recovery consistently showed greater than 100 percent recovery). However, FTIR data collected nearly simultaneously with the GFCIR data show that the GFCIR results were significantly lower than FTIR results. Since the Agency applied statistical methods to analyze the FTIR data and concluded that the FTIR method did not have a significant bias, the Agency is confident in the values reported by the FTIR instrument. Therefore, this leads to a paradox with the GFCIR data; the results are contradictory for the GFCIR. At this point, the Agency has not determined the cause of the paradox, which has led to the decision to postpone promulgation of Method 322 as an alternative method for measurement of HCl from portland cement kilns.

The EPA will continue to investigate the reasons for the differences in the two methods, and if a satisfactory solution is found to correct the problem, may consider further action on this method if additional evaluation data are available. For this reason proposed Method 322 is not being promulgated at this time and may not be used in applicability determinations for portland cement plants. (A more detailed discussion of this can be found in comment 2.5.1 in the Response to Comment Document.)

In the proposal, we stated that Methods 26 and 26A may be used in applicability determinations provided that these methods are validated concurrently using M. 321 or 322. Several comments were received stating that EPA is restricting M. 26 and M. 26A use by requiring that they be validated each time they are used, and that Method 26 has long been an approved EPA test method. Based on these comments, this requirement has been changed such that Methods 26 and 26A may be used to confirm a source is a major source without concurrent validation with M. 321 or M. 322. However, M. 26 or 26A may not be used to make the assertion that the source is an area source. Only the FTIR methods may be used for the measurement of HCl if the source wishes to claim it is not a major source. See the preamble section "Summary of Responses to Major Comments" for further discussion of this issue about how a source should determine whether it is a major or area source.

G. Reporting

A provision has been added to the final rule requiring that the semi-annual summary report for the period in which the annual combustion system component inspection was conducted include the results of the inspection.

H. Exemption from New Source Performance Standards

To eliminate overlap or duplicate coverage of NSPS and MACT standards for portland cement facilities, affected sources subject to requirements under this NESHAP are exempted from requirements under 40 CFR 60, subpart F, the New Source Performance Standards. However, there are two exceptions to this: kiln and in-line kiln/raw mills, and greenfield raw material dryers, that are new or reconstructed sources under the definition in Subpart F, and are located at area source cement plants, would still be subject to applicable PM limits, opacity limits, and recordkeeping and reporting requirements of the NSPS. The reason for this is that these "NSPS" kilns and in-line kiln/raw mills, and greenfield raw material dryers that are located at area source cement plants would be subject to the NESHAP's D/F and/or THC limits, but would not be subject to the NESHAP's PM limits, because they are located at area source cement plants.

I. Delegation of Authority

The final rule reserves authority for approval of alternate emission standards, major alternatives to test methods, major alternatives to monitoring procedures and waivers of recordkeeping.

J. Test Methods 320, 321, and 322

Test Methods 320 and 321 are being promulgated with minor corrections to clarify and improve test procedures, and correct equations incorrectly stated in the proposal notice. Proposed Test Method 322 is not being promulgated at this time as noted in Section F above.

V. Summary of Impacts

A. Air Quality Impacts

The air quality impacts of the final rule are identical to those of the proposed rule. Nationwide baseline HAP emissions from portland cement manufacturing plants are estimated to be 260 Mg/yr (290 tpy) at the current level of control. This rule will reduce emissions of HAPs by 82 Mg/yr (90 tpy) from baseline levels. Estimates of annual emissions of HAPs and expected reductions from implementation of this rule are given in metric and English units in Tables 7 and 8. The following text reviews the information provided in Tables 7 and 8.

TABLE 7.—NATIONWIDE ANNUAL EMISSION REDUCTIONS OF HAPS AND OTHER POLLUTANTS FROM PORTLAND CEMENT MANUFACTURING PLANTS

(Metric units)

Source	Pollutant	Baseline emissions (Mg/yr)	Emission reduction [Mg/yr]
Kilns, in-line kiln/raw mills, and alkali bypasses	HAP Metals[a]	150	35
	PM[a]	14,000	3,400
	D/F (TEQ)[b]	44 g/yr	16 g/yr
	Organic HAPs[c]	120	47
	THC[c]	530	200
Clinker coolers	HAP Metals[a]	1.1	0.18
	PM[a]	8,100	1,300

[a] These numbers pertain to existing sources only.
[b] These numbers pertain to both new and existing NHW kilns.
[c] These numbers pertain to new greenfield NHW kilns only.

TABLE 8.—NATIONWIDE ANNUAL EMISSION REDUCTIONS OF HAPS AND OTHER POLLUTANTS FROM PORTLAND CEMENT MANUFACTURING PLANTS

[English units]

Source	Pollutant	Baseline emissions (tpy)	Emission reduction (tpy)
Kilns, in-line kiln/raw mills, and alkali bypasses	HAP Metals[a]	160	38
	PM[a]	16,000	3,800
	D/F (TEQ)[b]	0.096 lbs/yr	0.035 lbs/yr
	Organic HAPs[c]	130	52
	THC[c]	580	220
Clinker coolers	HAP Metals[a]	1.2	0.2
	PM[a]	8,800	1,400

[a] These numbers pertain to existing sources only.
[b] These numbers pertain to both new and existing NHW kilns.
[c] These numbers pertain to new greenfield NHW kilns only.

This rule will reduce PM emissions from the existing NHW cement kilns and in-line kiln/raw mills by 3,400 Mg/yr (3,800 tpy) from the baseline level, a reduction of 24 percent. Emissions of HAP metals from the affected existing NHW cement kilns and in-line kiln/raw mills will be reduced by 35 Mg/yr (38 tpy), a reduction of 24 percent from the baseline level. Emissions of D/F TEQ will be reduced by 15 grams (g)/yr (0.033 lb/yr), a reduction of 36 percent from the baseline level, at existing NHW cement kilns and in-line kiln/raw mills located at major source and area source facilities.

For new NHW cement kilns and in-line kiln/raw mills, the MACT standards are projected to reduce emissions of D/F TEQ by an average of 0.6 g/yr (0.001 lb/yr) over the next 5 years (from major and area sources), a 36 percent reduction from projected baseline emissions. For new kilns, the MACT standards will also reduce projected emissions of THC by an average of 200 Mg/yr (220 tpy) and organic HAPs by an average of 47 Mg/yr (52 tpy) over the next 5 years, an emissions reduction for each of 39 percent from corresponding estimated nationwide baseline emissions.

The MACT standards will reduce PM emissions from 35 percent of the existing clinker coolers by 1,300 Mg/yr (1,400 tpy) from the baseline level, a reduction of 16 percent. Emissions of HAP metals from affected existing clinker coolers will be decreased by 0.18 Mg/yr (0.2 tpy), a reduction of 16 percent from the baseline level.

Additional reductions of THC and organic HAPs will result from the MACT standards for new greenfield raw material dryers. However, information on THC emission rates from raw material dryers and a projection of the number of such affected sources is not currently available, so nationwide reductions cannot be estimated.

B. Water Impacts

The impacts of the final rule are identical to those of the proposed rule. Control of D/F emissions using water injection for temperature reduction will result in an estimated increased water consumption (evaporated into the kiln exhaust gas for cooling) of 190 million gallons per year for existing NHW kilns and NHW in-line kiln/raw mills and 8 million gallons per year for new NHW kilns and NHW in-line kiln/raw mills.

C. Solid Waste Impacts

The impacts of the final rule are identical to those of the proposed rule. The amount of solid waste from existing NHW kilns, in-line kiln/raw mills, and clinker coolers (located at major sources) will increase by an estimated 4,700 Mg/yr (5,200 tpy) due to the requirements for PM control in the final rule.

D. Energy Impacts

The impacts of the final rule are identical to those of the proposed rule. For existing NHW kilns and NHW in-line kiln/raw mills the MACT standards for PM and D/F will increase energy consumption by an estimated 11 million kilowatt hours (KWh)/yr [38 billion British thermal units (Btu)/yr]. For new NHW kilns and NHW in-line kiln/raw mills the MACT standards for D/F will increase energy consumption by an estimated 10,600 KWh/yr (36 million Btu/yr).

E. Nonair Health and Environmental Impacts

The reduction in HAP emissions will have a beneficial effect on nonair health and environment impacts. Dioxin/furan and HAP metals have been found in the Great Lakes and other water bodies and

have been listed as pollutants of concern due to their persistence in the environment, potential to bioaccumulate, and toxicity to humans and the environment. Implementation of the NESHAP will aid in reducing aerial deposition of these emissions.

Occupational exposure limits under 29 CFR part 1910 are in place for some of the regulated HAPs (and surrogates) not including D/F. The National Institute for Occupational Safety and Health recommends an exposure level for D/F at the lowest feasible concentration. The final rule will reduce emissions, and consequently, occupational exposure levels for plant employees.

F. Cost Impacts

For new and existing NHW kilns, NHW in-line kilns/raw mills, clinker coolers, raw and finish mills, and materials handling facilities, the projected overall total capital costs of the final rule for controlling and monitoring emissions of D/F, PM (includes opacity), and THC are $108 million. The overall projected annual costs of the rule, for controlling and monitoring for D/F, PM (includes opacity), and THC, are $37 million. For new and existing NHW kilns and NHW in-line kiln/raw mills, the projected total capital and annual costs of complying with the MACT standard for D/F (includes controls and monitoring) are $15 million and $3.6 million, respectively. For new and existing sources subject to PM and/or opacity limits, the projected total capital and annual costs of complying with the MACT standards for PM and opacity (including PM controls, PM CEMs, and continuous opacity monitors) are $92 million and $33 million, respectively. With respect to PM CEMs costs only, the projected total capital and annual costs of PM CEMs are $15 million and 7.6 million, respectively. The THC emissions limit for new greenfield NHW kilns, NHW in-line kiln/raw mills and raw material dryers can be met by processing materials with typical levels of organic content, without installing and operating add-on pollution control systems that would be relatively costly. Feed materials that have sufficiently low levels of organic matter are widespread across the U.S., and the siting of new greenfield kilns is not expected to be significantly limited by the emission limit. The projected fifth-year national capital and annual costs of monitoring THC with a continuous emission monitor for new greenfield NHW kilns, in-line kiln/raw mills and raw material dryers are $0.75 million and $0.45 million, respectively (based on an estimated four new affected sources).

G. Economic Impacts

EPA conducted an economic analysis of the proposed NESHAP, and has reconducted its analysis to include the costs of PM CEMs and the monitoring of materials handling sources. The economic impacts of the final rule are slightly greater than those of the rule as proposed. Because the final standards may potentially include costs associated with PM CEMs and the monitoring of materials handling sources, EPA reconducted its economic analysis. This revised analysis evaluates a regulatory option that is more stringent than the final standards. Analyzing this more stringent option, which overstates the expected compliance costs, causes the economic impacts presented here to over estimate the expected impacts of the final standards. However, these economic impacts are only slightly greater than those of the proposal analysis.

The EPA estimates that regional market price increases of portland cement will be between 0.3 and 2.6 percent. The national average price increase is estimated to be 1.1 percent. The related decreases in quantity demanded of portland cement are estimated to range from 0.3 to 2.3 percent, with a national average of 1.0 percent. Domestic production of portland cement is estimated to decrease more than consumption (2.2 percent compared to 1.0 percent nationally because imports are estimated to increase by 5.5 percent). The decreases in domestic production may lead to the loss of approximately 334 jobs in the United States. No plants are expected to close; four kilns are expected to cease operating.

VI. Summary of Responses to Major Comments

A complete summary of all of the public comments on the proposal, and responses to these comments is provided in the "Response to Comments" document available in the docket and from EPA's Technology Transfer Network. The responses to major comments are given in this section.

Portland Cement Source Category

Comment: Commenters raised objections to splitting the portland cement category for cement kilns by the type of fuel (hazardous waste vs. fossil fuels) burned in the kiln. The commenters stated that splitting the industry by fuel type deviates from EPA's original source category list (July 16, 1992 FR) which included only a portland cement manufacturing category, and that no distinction is made regarding fuel type under the New Source Performance Standards (NSPS) for portland cement plants. The commenters were concerned that EPA's decision not to use the NSPS category will result in what Congress hoped to avoid (through section 112(c)(1)) by causing unnecessary costs and dislocations in the cement industry.

Response: Section 112(d)(1) of the Clean Air Act specifically provides that "the Administrator may distinguish among classes, types and sizes of sources within a category or subcategory in establishing standards. . . .". With regard to having separate categories/subcategories, the EPA believes that there can be significant differences in emissions due to hazardous waste burning that warrant separate classes for these devices. The types of HAPs found in emissions from hazardous waste-burning kilns are different from, and more numerous than, those from NHW kilns. Hazardous wastes can contain virtually any HAP, which in turn can be in stack emissions. The fact that hazardous waste-burning kilns are dealt with separately under a different statute (RCRA section 3004(q)(special standards for industrial furnaces which burn hazardous waste fuels)) likewise indicates that hazardous waste-burning cement kilns can be dealt with legitimately as a separate class. Indeed, this existing RCRA regulatory regime has created a different data base, and system of existing controls, which can result in different analyses, different floor controls and standards under the section 112 MACT process, again indicating that these sources can reasonably be classified as a distinct class. To summarize, this NESHAP for portland cement manufacturing covers NHW kilns and NHW in-line kiln raw mills; it does not apply to HW cement kilns which are subject to subpart EEE of this part. This NESHAP also covers affected sources located at portland cement manufacturing plants (such as clinker coolers, raw material dryers, and materials handling processes), regardless of whether the plant operates HW kilns.

Comment: Two commenters stated that EPA has not met its legal burden to be consistent when regulating HW and NHW cement kilns. The commenters stated that the EPA has not used consistent rationales and approaches to develop emission limitations for the same pollutants.

Response: There are a number of differences between kilns that burn hazardous waste and those that do not

in terms of process feed/fuel, process operation, pollutants and pollutant quantities generated, existing regulations that impact MACT floor determinations, and the economics of their operations. These differences provide the bases for differences in determinations of MACT floors, emission limits, and other regulatory requirements. When there is no rational reason for differences between the two standards, EPA has changed the two sets of rules (see section IV. of this preamble for a discussion of changes made to this rule since proposal) to make them more consistent.

Regulation of Cement Kilns Under Section 129

Comment: According to one commenter, the EPA is required to regulate any facility that combusts any solid waste under section 129 of the Clean Air Act. However, EPA's current section 129 regulations either: (1) Exempt portland cement kilns that burn any amount of hospital waste, medical waste, and infectious waste from the medical waste incinerator (MWI) rule, (2) exempt cement kilns that burn less than thirty percent waste from the municipal waste combustor (MWC) rule, or (3) have yet to be promulgated as the commercial and industrial waste rule. The commenter asserts that the EPA cannot fail to promulgate section 129 regulations for cement kilns that burn non-hazardous solid waste by suggesting that it may promulgate section 129 regulations in the future. Cement kilns would then be permitted to combust any of these wastes without complying with section 129, despite the fact that the Clean Air Act expressly mandates that any unit burning any solid waste must comply with section 129. Therefore, the commenter asserts that the EPA must promulgate section 129 standards for cement kilns that burn any solid waste now. If EPA cannot promulgate section 129 standards immediately, the commenter asserts that EPA must, at a minimum, include numerical emission standards for the pollutants listed in section 129 (including mercury, cadmium, and lead) in its proposed regulations under section 112.

Response: EPA does not read section 129 as precluding EPA from promulgating an interim section 112 (d) standard for portland cement kilns which burn non-hazardous solid waste. The interim alternative is to have no regulation at all for HAP emissions. This is because the only rules implementing section 129 explicitly do not apply to waste-burning cement kilns (see 40 CFR sections 60.50b(p), 60.32b(m), 60.50c(g) and 60.32e(g)) and the explanation for these provisions in 62 FR at 45117 (Aug. 25, 1997) and 62 FR at 48538 (Sept. 15, 1997)). Neither the commenter or any other person challenged these provisions, and EPA is not reopening the section 129 rules for consideration here.

EPA does not regard interim non-regulation of non-hazardous waste burning cement kilns as a reasonable alternative to including them within the scope of these portland cement MACT regulations. Indeed, were the Agency to exempt waste burning cement kilns from these MACT standards, it would create a strong incentive for cement kilns to burn waste to escape MACT regulation. EPA emphasizes, however, as we did at proposal, that the standards in today's rule do not represent EPA's final determination that only section 112 (d) standards are appropriate or required for solid non-hazardous waste-burning cement kilns. Today's action does not in any way foreclose an eventual section 129 standard.[1]

With regard to the commenter's suggestion that EPA adopt specific emission limits in this MACT rule for mercury, lead, and cadmium—which are pollutants identified in Section 129 for regulation—as EPA discussed at proposal, emission limits were considered in the MACT rule for these pollutants. As discussed at proposal, EPA was unable to identify a MACT floor for mercury. As a result, there is no mercury emission limit which can be associated with a MACT floor. The use of activated carbon injection (ACI) was considered by EPA as a "beyond the floor" alternative. However, as also discussed at proposal, based on the relatively low levels of existing mercury emissions from individual NHW cement kilns and the costs of reducing these emissions by ACI, EPA does not consider this beyond the floor alternative justified. Thus, no mercury emission limit is included in the final MACT rule, and thus would not be included even if this was a section 129 rule. Finally, as also discussed at proposal, EPA considers PM a surrogate for semi-volatile metals (e.g., lead, cadmium, etc.). The proposed rule and the final rule include a PM emission limit based on the use of MACT. As a result, the final rule achieves reductions in emissions of these pollutants consistent with MACT. Furthermore, sufficient data do not exist to identify emission limits for lead and/or cadmium associated with MACT and EPA is unable to establish emission limits for these pollutants in this rule. See *Sierra Club* v. *EPA*, no. 97–1686 (D.C. Cir. 1999) slip op. at 15 (EPA is not obliged to establish a MACT standard for HAPs for which the Agency is unable to quantify emission reductions). Even if such emission limits could be developed, however, they would not result in any further reduction in emissions beyond that achieved by the MACT rule, given the PM standard.

Comment: Other commenters believe that cement kilns, irrespective of their fuel or raw material mix, should be regulated under the portland cement NESHAP and not under section 129 of the Clean Air Act. Commenters stated that the EPA's discussion of its authority under section 129 is irrelevant to, and inappropriate in, the proposed portland cement NESHAP. They said that if EPA intends to regulate cement kilns that burn solid waste materials under section 129, the proper venue would be in a proposal pursuant to section 129. Commenters stated that, based on the discussion of section 129, EPA has apparently already determined how it intends to treat solid waste burning cement kilns in the section 129 rulemaking. Ten commenters were concerned that cement kilns could be subject to different regulations from year-to-year (or day-to-day) depending on whether they trigger the section 129 applicability thresholds. The commenters believe that such a regulatory structure is confusing, burdensome, inappropriate, and raises serious legal issues. Commenters noted that the EPA's proposed regulation of solid waste burning cement kilns under section 129 could lead to increased fuel consumption and emissions of greenhouse gases as cement kilns try to avoid triggering section 129 regulation by not burning alternative fuels like solid waste.

Response: The EPA acknowledges all the comments dealing with the potential future regulation under section 129 of the CAA of air emissions from cement kilns that burn solid waste (other than hazardous waste). Both the proposed and final promulgated portland cement NESHAP apply to cement kilns which burn solid waste (other than hazardous waste). If the EPA decides in the future that emission standards developed under the authority of section 129 of the CAA are warranted for cement kilns that burn solid waste, a separate rule will be proposed to allow for public comment. The commenters' concerns regarding duplicative regulations are misplaced, however. See CAA section 129(h)(2)

[1] Any waste burning cement kiln subject to a section 129 standard would no longer be subject to these section 112 (d) MACT standards. See CAA section 129 (h) (2).

(units can't be regulated simultaneously under both sections 129 and 112(d)(2)).

Regulation Under 112(c)(6)

Comment: Commenters stated that the EPA should not exercise its authority under section 112(c)(6) to regulate dioxin/furan emissions from area sources since the area sources have *de minimis* dioxin/furan emissions and regulating them under section 112 will impose significant burdens (for reporting, recordkeeping, monitoring, and control technology) while providing negligible environmental benefits. These commenters further state that EPA's own estimates indicate D/F emissions from NHW kilns contribute only 0.8 percent of total nationwide D/F emissions. The commenters do not believe that Congress intended such a result in drafting section 112(c)(6).

Response: Regarding the above comments about regulation of D/F under section 112(c)(6), the EPA is required by section 112(c)(6) to "list categories and subcategories of sources assuring that sources accounting for not less than 90 per centum of the aggregate emissions of each such pollutant are subject to standards under subsection (d)(2) or (d)(4) of this section." The method for identifying and selecting sources for listing and regulation under these subsections was discussed at length in **Federal Register** notices published on June 20, 1997 (62 FR 33625) and April 10, 1998 (63 FR 17838). Section 112(c)(6) does not provide for de minimis exemptions for source categories, but rather directs EPA to make findings on the basis of what is necessary to meet the requirement to assure that sources accounting for 90 percent of the emissions of these pollutants are subject to standards. Moreover, because the pollutants addressed by section 112(c)(6) are persistent, that is, they remain in the environment for extremely long periods of time without breaking down, the EPA believes that any claims of de minimis contributions should be considered with great caution, and granted in only very exceptional circumstances. Consequently, the EPA believes that its decisions in response to section 112(c)(6) represent a reasonable exercise of its discretion within the constraints of that subsection.

Comment: Several commenters stated that EPA's proposed action to regulate cement kiln "area sources" under CAA section 112(c)(6) violates the CAA and is arbitrary and capricious. They stated that the EPA has improperly proposed to apply the MACT standards to area source cement kilns and other HWCs before deciding upon listing criteria and preparing the overall list or lists of sources required by that provision. In referring to EPA's proposal to regulate area sources of 112(c)(6) pollutants, they stated their view that only those 112(c)(6) pollutants for which a source category is listed under 112(c)(6) should be regulated.

Response: Regarding the initial portion of the above comment, the notice of the final source category listing for section 112(d)(2) rulemaking pursuant section 112(c)(6) requirements was published April 10, 1998, in 63 FR 17838–17855. The referenced notice provides the required listing of area sources, and therefore the commenter's point is moot.

The proposed rules for NHW kiln portland cement manufacturing would only have regulated area sources for D/F emissions, which is one of the pollutants for which these plants are listed as area sources. The pollutants for which portland cement NHW kilns were listed under 112(c)(6) are polycyclic organic matter (POM), D/F, and mercury. At proposal, the EPA had conducted an analysis under section 112(d)(2) for D/F and mercury with respect to establishing emission standards, and concluded that area sources of D/F should be regulated. The analysis for mercury showed that the MACT floor for new and existing sources was no control. The BTF technology, use of activated carbon injection, was determined not to be cost-effective. Therefore, no emission standard was proposed for mercury.

The preamble for the proposed rule stated that POM emissions (using THC as a surrogate) from portland cement NHW kiln area sources would be subject to MACT standards under EPA's interpretation of section 112(c)(6). A THC emission standard was proposed for new raw material dryers and new NHW in-line kiln/raw mill main exhausts at cement plants that are major sources. At proposal, THC was identified as a surrogate for organic HAP emissions, which would include POM. The final rule's limits on THC emissions are applicable only to new greenfield kilns, in-line kiln raw mills, and raw material dryers, for reasons discussed in section IV.C. of this preamble. EPA is clarifying today that since THC is a surrogate for POM, the THC emission limits are applicable to new greenfield kilns and raw material dryers at cement plants that are major and area sources.

Comment: Several commenters stated their support for an alternative interpretation of regulating area sources emitting HAPs listed under 112(c)(6). They stated that section 112(d)(5) does not exclude area source categories listed pursuant to section 112(c)(6) from the Agency's discretionary authority to apply GACT standards nor does section 112(c)(6) prohibit EPA from exercising its discretionary authority under section 112(d)(5). According to the commenters, section 112(d)(5) grants the Administrator authority to establish GACT standards for any area sources listed pursuant to section 112(c), whether such sources are listed pursuant to section 112(c)(3) or (c)(6). They contended that had Congress intended to exclude section 112(c)(6) area sources from the GACT standards under section 112(d)(5), Congress would have stated this exclusion in section 112(d)(5).

Another commenter argued against the alternative interpretation owing to the bioaccumulation potential of the 112(c)(6) pollutants and the fact that the GACT approach would include no floor analysis or residual risk assessment.

Response: Section 112(c)(6) specifically states that EPA is to assure that sources of the pollutants to which this subsection applies be subject to standards under subsections (d)(2) or (d)(4). These subsections refer, respectively, to MACT and standards for pollutants for which a health threshold has been established (a null set of purposes for this rule). The natural reading of the provision (and at the least, a permissible one) is to say that MACT standards apply to emissions of 112(c)(6) HAPs from all sources. The alternative reading, that GACT requirements could apply because GACT requirements apply in lieu of section 112d(2) MACT requirements reads language into section 112c(6) not apparent on its face. Moreover, where Congress wished to reference subsection (d) without limitation, it omitted references to specific paragraphs. Compare the language of section 112(c)(6), which refers to standards under subsection (d)(2) or (d)(4), with the language of section 112(k)(3)(B)(ii), which refers to standards under subsection (d). In addition, the reading suggested by the industry commenters goes against the natural purpose of section 112c(6), namely, to assure that the maximum available control technology is applied to control the emission of the most dangerous HAPs. (This is also the thrust of the comment summarized above criticizing the reading suggested by industry commenters. EPA agrees with this comment.) The Agency has therefore concluded that none of the comments provided compelling facts or arguments to overcome the interpretation that section 112(d)(2) specifically refers to MACT standards.

Regulatory Flexibility Act and the Small Business Regulatory Enforcement Fairness Act

Comment: Several commenters stated or supported the belief that the proposed rulemaking was incorrectly certified, contending that no factual basis was provided for the Agency's certification of no significant impact on a substantial number of small entities, and thus, EPA is not in compliance with provisions of the Regulatory Flexibility Act (RFA), 5 U.S.C. 601 *et seq.* They stated that EPA needs to review its certification and provide a factual basis for it or complete an initial regulatory flexibility analysis, as required by the RFA.

The commenters contended the certification was deficient in that the Agency's guidance allows regulators to bypass a regulatory flexibility analysis if the industry has fewer than 100 firms. Furthermore, the seven small companies, representing 16 percent of the total number of affected companies, constitutes a "substantial number." Some commenters also stated their concern that even at a less than one percent cost-to-sales ratio effect on small businesses there could be a significant economic impact. Another commenter stated that EPA had not evaluated "reasonable worst case" impacts for any single plant. Several commenters requested more information regarding EPA's assessment of small business impacts and steps taken to minimize the impacts.

Response: The following discussion responds to the small business impact issues raised by the commenters. In accordance with the RFA, the Agency conducted a small business assessment and based its finding of "no significant impact on a substantial number of small entities" on the reported impacts of the proposed NESHAP on small businesses within the cement industry (Docket Item II-A-46, Table 4-7; Docket Item IV-C-15). The Agency did not intend to suggest that this certification was based solely upon the number of small businesses potentially affected by the rule, nor that the Agency sets thresholds for determining whether a particular number of businesses is a substantial number or a particular impact is a significant impact. The EPA did not certify that the rule would have no significant impact on a substantial number of small firms based solely on there being less than 100 firms subject to the rulemaking (Docket Item II-C-14). To clarify the factual basis of EPA's determination and address subsequent comments, a summary of the Agency's small business assessment is provided below.

Based on SBA-defined small business criteria, the Agency originally identified nine of the 44 companies within the U.S. cement industry as small businesses, or roughly 20 percent of total. However, based on updated information and changes in ownership since 1993, the Agency determined that four of these companies should not be considered small businesses. The APCA indicated that there are currently seven small businesses within this industry. This list includes the remaining five identified by the Agency plus Dacotah Cement and Royal Cement Company. Dacotah Cement is owned by the State of South Dakota and, thus, was not considered a small business by the Agency. Royal Cement Company began operations in 1995 after the Agency had completed its small business assessment and, thus, was not included in the Agency's small business assessment because EPA's engineering and economic data base did not contain information on this relatively new facility.

The Agency typically uses the cost-to-sales ratio as a measure of impact on small businesses. This ratio refers to the change in the annual control cost divided by the annual revenue generated from sales of the particular good or goods being produced in the process for which additional pollution control is required. It can be estimated for either individual firms or as an average for some set of firms such as affected small companies. While it has different significance for different market situations, it is a good rough gage of potential impact. In this case, to develop the cost-to-sales ratios, the Agency used the estimated control costs specific to the kilns operating at each manufacturing plant owned by a small business divided by their baseline cement sales. Contrary to industry's comments, the cost-to-sales measure of impact used by the Agency is a conservative approach and may, in fact, overstate the regulatory burden on small businesses for two reasons: (1) The Agency's sales estimate understates company sales because it only reflects cement operations and most companies have other vertical or horizontal business lines; and (2) this measure does not account for the expected market adjustments, i.e., increase in market prices that can potentially offset a portion of the regulatory costs.

For the economic impact analyses, the regulatory control costs were input to an economic model to predict outcomes at the market and plant level, including the impacts for markets served by manufacturing plants owned by small businesses. As shown in Table 4-7 of the EIA report (Docket Item II-A-46), the Agency did not project any plants or kilns owned by the original nine small businesses to close as a result of the proposed NESHAP.

As summarized in the Agency's June 10, 1998, letter to industry (Docket Item IV-C-15), a second small business assessment was conducted for the small businesses identified by the APCA. The weighted average cost-to-sales ratio for these small businesses was 0.93 percent with no plants or kilns projected to cease operations (Docket Item IV-B-5).

A third small business assessment was conducted to include the cost of PM CEMs and the monitoring of materials handling operations. (The promulgated rule requires the installation of PM CEMs, and more frequent monitoring of materials handling operations than included in the proposed rule. See Section IV and this section for further discussion of these requirements). The new weighted average cost-to-sales ratio for the small businesses was 1.4 percent with no plants or kilns projected to cease operations. See Docket Item IV-B-11 for the resulting company-specific cost-to-sales ratios for this third analysis. Further, to measure the relative regulatory burden on small businesses, these impacts at small businesses can be compared to those for the whole industry. See Docket Item IV-A-4 for this comparison.

As discussed above, based on the Agency's revised small business impacts assessments, which now include the cost of PM CEMs and other monitoring costs not considered at proposal, the Agency concludes that this NESHAP as promulgated today will not have a significant impact on a substantial number of small businesses. Nevertheless, EPA will reassess, as appropriate, small business impacts in the future proposed rulemaking that will establish the date that PM CEMs must be installed on NHW cement kilns.

Comment: One commenter stated that EPA must have objective, reasonable certainty that there will be no pertinent impacts on small entities or it cannot validly certify. The EPA must create a testable record against which the validity of certifications could be judicially reviewed. 5 U.S.C. 611(a) and (b). The commenter further claimed that EPA's SBREFA Guidance states that when EPA "cannot or does not certify that a proposed rule will not have a significant impact on a substantial number of small entities, it must prepare a regulatory flexibility analysis for the proposed rule." The commenter

does not believe EPA has met this burden for the proposed rule.

Response: Section 605(b) provides an exemption from the requirements in sections 603 and 604 to conduct a regulatory flexibility analysis when the Agency "certifies that the rule will not, if promulgated, have a significant economic impact on a substantial number of small entities." The EPA has made this certification for the rulemaking. The EPA believes its interpretation of the requirements of the RFA is reasonable and that its factual basis for certification is also reasonable.

To the extent that the commenter is suggesting that the RFA requires more than a reasonable basis for its decision to certify, the EPA disagrees. Courts review compliance with the RFA in accordance with Chapter 7 of the Administrative Procedure Act (APA), 5 U.S.C. 701, *et seq.* See 5 U.S.C. 611(a)(1) and (2). Under the APA, courts generally provide substantial deference to agency decisionmaking and will only set aside administrative actions or findings if the court concludes that the agency's action or finding was arbitrary, capricious, or otherwise contrary to law. 5 U.S.C. 706(2)(A). The Supreme Court has explained, "To make this finding the court must consider whether the decision was based on consideration of the relevant factors and whether there has been a clear error of judgement." *Citizens to Preserve Overton Park* v. *Volpe*, 401 U.S. 415 (1971). The EPA believes that its detailed economic analysis more than adequately supports its conclusion that the rule will not result in a significant impact on a substantial number of small entities.

Comment: The same commenter believes SBREFA can only be interpreted to allow numerical cutoffs based on the percentage of all small entities in the regulated universe that experience any impact. The commenter contends that when a rule impacts all the small entities in an industry, the statute a fortiori requires an analysis of whether those impacts are significant, and precludes a certification based solely on any absolute number of small entities impacted. By the same token, if the percentage of small entities experiencing any impact is more than *de minimis*, a similar analysis appears required. The commenter contends that this concept has been repeatedly recognized by EPA findings that impacts on more than 20 percent of the small entities within a universe proposed to be regulated constitute a "significant number." 61 FR 48206, 48228 (September 12, 1996); 59 FR 62585, 62588 (December 6, 1994). It also lies at the heart of the "impacts" matrix in EPA's SBREFA Guidance. The commenter notes that under that matrix, greater "impact" priority is assigned to rules that will impact a larger percentage of small entities, even if the impacts are relatively low.

Response: Other than small entities, the RFA does not define the term, or any part of the term, "significant impact on a substantial number of small entities." Thus, the statute does not specify whether an agency may properly certify a rule either because there is not a significant impact on small entities, or because, even if the impact is significant, there are not a substantial number of small entities affected. In any event, the EPA has chosen not to establish any mechanistic approach for determining when an impact is significant or when the number of small entities is substantial. Instead the EPA considers a variety of approaches depending on the particular circumstances of the rulemaking. In general, the EPA looks at both the extent of the potential impact and the number of small entities impacted to decide whether a more detailed regulatory flexibility analysis pursuant to sections 603 and 604 of the RFA is warranted. The EPA's Guidance repeatedly explains that the criteria offered in the Guidance cannot be applied mechanistically and that rule writers should consider other relevant information in deciding whether or not to certify a rule.

EPA's analysis of both the number of small entities impacted and the extent of that impact are described in previous responses in this section of this preamble, and as indicated above, the EPA has not certified this rulemaking based solely on the number (or percentage) of small entities.

Economic Impact Analysis

Comment: Several commenters believe that the final EPA economic analysis at proposal was inaccurate and should be either revised to reflect industry's comments (in Attachment G to docket item IV-D-26) or withdrawn. Another commenter stated that EPA's model economic impacts data are seriously flawed because:

1. The model would not detect company-level impacts.

2. The economic analysis is not based on any estimate or analysis of actual small-entity impacts but is based on an aggregated industry wide economic model based on theoretically constructed model kilns.

3. The model predicts that older smaller dry kilns will close, which is counterintuitive because wet kilns are substantially more costly to operate per unit of product.

4. Flaws in the market-specific part of the model which lead directly to the modeled conclusion that profits will increase with more stringent control.

Response: The EPA disagrees with the preceding comments suggesting the analysis is inaccurate and should be withdrawn. The Agency developed its economic analysis based on the best available information using an accepted approach firmly rooted in economic theory to provide the necessary impact results to satisfy legislative and administrative requirements. Furthermore, the Agency conducted a revised economic impact analysis in response to the additional monitoring requirements for cement kilns and materials handling operations at major source cement plants (as fully described in Appendix G recently added to the July 1996 EIA report, Docket Item II-A-46). In conducting this revised analysis, the Agency also updated the original 1993 baseline information that supported the economic analysis for proposal to 1995 and is thereby consistent with the baseline used by the Agency for the Cement Kiln Dust (CKD) rulemaking and Hazardous Waste Combustion MACT Standards. This adjustment to the baseline characterization results in some differences in the projected economic impacts from the proposal analysis. In particular, under 1995 baseline conditions, the model predicts an aggregate loss in industry profits because of the sharp reduction in excess U.S. cement capacity from 1993 to 1995. This increase in capacity utilization to roughly 94 percent in 1995 severely limits the ability of unaffected (and slightly affected) domestic producers to offset production declines at affected cement plants. As a result, the potential profit gains to these producers from offsetting these reductions is no longer present in 1995 as in 1993 and the economic model predicts an aggregate loss in pre-tax earning of the U.S. industry, which is consistent with the expectations of the commenter. However, this occurs through the difference in baseline characterization rather than flaws in the Agency economic model and approach.

The following responses address the above comments that are specific to the economic analysis conducted for the regulation as originally proposed. First, the comments are specific to a draft version of the EIA report that has been revised. Comments were addressed in changes to the analysis prior to proposal as follows:

1. As the commenter suggested, the economic model incorporated a more realistic assumption for the elasticity of supply from foreign imports.

2. According to the commenter the draft EIA report did not adequately describe the basis for defining the regional markets used in the economic analysis and led to some confusion and/or misinterpretation by the industry as reflected in its comments. Contrary to assertions, the Agency's economic model does not omit any market areas as all U.S. production and consumption of cement is accounted for within the 20 regional markets as defined by the Agency. The Agency utilized the best available information in defining regional markets to better account for the regional competition within the industry.

3. The commenter claimed the draft EIA report did not adequately describe the basis for selecting the imperfectly competitive market structure for the cement industry and the implications of this selection of the economic impact results. The Agency's selection of market structure was not an attempt to distort the economic impact results or to infer that the industry is collusive and lacks any competition. Rather it was selected to provide better estimates given well-known characteristics of the industry. The Agency has appropriately modeled the competitive interaction between domestic producers of cement as well as foreign imports (where applicable) within each regional market in a manner that is consistent with the empirical evidence for cement markets and economic theory.

In regard to the statement that the economic impact data are flawed and accompanying reasons, the Agency responds as follows:

1. The economic impact analysis does allow the Agency to detect company-level impacts by aggregating the estimated control costs and related economic impacts at all manufacturing plants owned by each company, both large and small. Although the issue of capital availability is an important consideration for small businesses, it is not typically addressed in EPA economic analyses of regulatory actions as it requires company-specific information not available to the Agency and, moreover, there is not a generally accepted method with which to model and analyze this complex issue in the context of environmental regulation.

2. The Agency's characterization of costs at individual kilns was based on the econometric estimation of cost functions for cement kilns by Das (1991 and 1992). Using the best information available, the EPA made adjustments to these cost functions to better reflect the operating costs of kilns by process type and capacity (as fully described in Appendix C, Docket Item II-A-46). However, in accounting for size or economies of scale in estimating baseline operating costs, the Agency was limited by the two capacity size classifications of less than and greater than 500,000 short tons per year for which labor productivity and fuel consumption were reported by the Portland Cement Association. This data limitation prevents the EPA from developing baseline cost functions for very small kilns and, effectively, "lumps smaller kilns in with mid-size kilns into a larger class" of all kilns as stated by industry. Therefore, it is possible that the EPA's economic model understates the baseline operating costs at very small kilns. However, the Agency is able to estimate the incremental compliance costs for many categories of kiln capacity below 500,000 short tons per year ranging from 55,000 to 450,000 short tons per year. This more detailed classification scheme for estimating the regulatory compliance costs reduces the uncertainty related to the Agency's estimates of kiln closures.

3. The Agency agrees with the industry comment that wet kilns are generally more costly to operate, which has contributed to their use of hazardous waste to reduce their fuel costs and remain competitive with the dry process kilns, especially those using precalciner and/or preheater technologies. However, the economic impacts of the proposed NESHAP depend not only on the baseline costs of cement production but also on the incremental costs of compliance for each kiln. The proposed NESHAP largely impacts non-hazardous waste burning kilns as opposed to hazardous waste kilns that are most often wet process kilns. As stated in the EIA report, it is the higher relative incremental cost impact compared to that for its competitors that causes the Agency's model to project closure for two dry process kilns under the proposed NESHAP. Furthermore, the baseline costs of cement production were high for these kilns because they were each older and smaller than average. Thus, the projected closures are actually consistent with the commenter's statement that older and smaller kilns are more vulnerable to closure with regulation. Moreover, in the final EIA report, the Agency provides closure estimates for additional regulatory alternatives and, for more stringent "above-the-floor" alternatives, the economic model projects up to 10 kilns to close including 5 wet process kilns. Thus, the Agency believes that its economic model produces closure estimates that are consistent with the commenter's characterizations.

4. Although the Agency projects a net increase in profits for the cement industry as a whole in response to regulation, there is a "social cost" to reducing hazardous air emissions from the manufacture of cement. As shown in the final report, the Agency estimates that society must give up $34.5 million per year for the expected environmental benefits (as compared to the $28.8 million in regulatory compliance costs incurred by industry after market adjustments). Furthermore, factors cited by industry are not the reason for the model's prediction of a net increase in profits for the industry as a whole. The Agency believes that it has appropriately modeled the competitive interaction between domestic producers of cement as well as foreign imports (where applicable) within each regional market in a manner that is consistent with the empirical evidence for cement markets and economic theory.

Related to the net increase in profits for the industry as a whole, several commenters were surprised that the economic analysis predicts an increase in cement plants' pretax earnings. They interpreted this as applying to individual plants, which is a misinterpretation. The economic analysis projects a net increase in the U.S. cement industry's pre-tax earnings, which reflects profit gains at unaffected or relatively less affected cement plants and profit losses at affected plants that incur higher relative compliance costs. Thus, the commenter's statement that each cement plant's pre-tax earnings will increase by X dollars for every dollar spent on compliance is incorrect as these impacts are distributed across different plants. Also, the estimated price increase applies to all cement produced by U.S. manufacturing plants whereas the MACT compliance costs apply only to cement produced at affected plants. Therefore, the commenter's calculation of the projected price increase as a share of MACT compliance costs is also incorrect as the commenter is understating the relevant change in cost by dividing the MACT compliance costs by all cement produced rather than only the affected share of cement production. The projected increase in pre-tax earnings is a net result for the industry that results from losses at some cement plants that are offset by gains at other cement plants.

PM CEMs

Comment: Numerous comments were received stating that the EPA has not fully considered the impacts of a potential requirement for PM CEMS applied to NHW kilns, and that PM CEMs have not been adequately demonstrated on cement kilns.

Response: In the preamble to the proposal, EPA noted its intent to include a requirement for PM continuous emission monitoring system (CEMS) in the final rule, unless the analysis of existing or newly acquired data and information showed that it is not appropriate (see 63 FR at 14205). Based on successful testing on an incinerator conducted in the interim, as well as extensive use of these monitors in Europe, EPA believes there is sound evidence that PM CEMS should work at cement kilns. In addition, preliminary analyses of the cost of PM CEMS applied to cement kilns (docket items IV-C-1 and IV-C-21) and hazardous waste combustors (HWC) suggest that these costs are reasonable. Accordingly, the final rule contains a requirement to install PM CEMS. However, we agree with comments that indicate a need to develop cement kiln-specific performance requirements for CEMS and to resolve other outstanding technical issues. These issues include all questions related to implementation of the CEM requirement (i.e. relation to all other testing, monitoring, notification, and recordkeeping), relation of the CEM requirement to the PM emission standard, as well as technical issues involving performance, maintenance and correlation of the CEM itself. These issues will be addressed in a subsequent rulemaking. Therefore, we are deferring the effective date of this requirement pending further testing and additional rulemaking. As a result, in today's final rule, EPA is requiring that particulate matter continuous emission monitoring systems (PM CEMS) be installed at cement kilns. However, since the Agency has not finalized the performance specifications for the use of these instruments at cement kilns or resolved some of the technical issues noted above, we are deferring the effective date of the requirement to install, correlate, maintain and operate PM CEMS until these actions can be completed. The PM CEMS installation deadline will be established through future rulemaking, along with other pertinent requirements, such as final Performance Specification 11, Appendix F Procedure 2. It should finally be noted that EPA has a concurrent rulemaking process underway for hazardous waste combustors (HWC) and plans to adopt the same approach in that rule.

EPA also is taking action now to avoid facilities being in violation of the PM standard during CEM correlation testing. Commenters properly observed that CEM correlation testing would require sources to manipulate their PM control device during correlation tests to obtain higher PM emissions levels than the emission limit. It is necessary to do so because a good PM CEMS correlation must include CEMS and manual method data above the stated emission standard in order to have a wide enough range of data to meet the correlation coefficiency statistical requirement and to assure that calibrated readings above the level of the emission standard can be properly interpreted. Such data, however, could be misconstrued by state or local enforcement authorities or citizens as violations of the PM standard. It is important to address this issue now to encourage the development of additional PM CEMS data, and not to discourage facilities from choosing to install a CEM before the deferred effective date.

We are addressing this concern here in the same manner we plan to address it in the HWC MACT rule by providing that the particulate matter and opacity standards of parts 60, 61, 63 (i.e., all applicable Parts of Title 40) do not apply during particulate matter CEMS correlation testing, provided that you comply with certain provisions discussed below that ensure that the provision is not abused. EPA is also making this provision effective immediately, so that sources need not wait for the compliance date to take advantage of this particulate matter CEMS correlation test provision. We believe this approach adequately addresses commenters' concerns.

The temporary exemption from particulate matter and opacity standards is conditioned on several requirements. Sources are required to develop and submit to permitting officials a PM CEMS correlation test plan along with a statement of when and how any excess emissions will occur during the correlation tests (*i.e.*, how you will modify operating conditions to ensure a wide range of particulate emissions, and thus a valid correlation test). If the permitting officials fail to respond to the test plan in 30 days, the source may proceed with the tests as described in the test plan. If the permitting officials comment on the plan, the source must address those comments and resubmit the plan for approval. In addition, runs that exceed any PM or opacity emission standard are limited to no more than a total of 96 hours per correlation test. This 96 hours is sufficient time for a source to increase emissions to the desired level and reach system equilibrium, conduct testing at the equilibrium condition followed by a return to normal settings indicative of compliance with emissions standard(s) after those higher emissions data have been obtained, and return to equilibrium at normal conditions. Finally, to ensure these periods of high emissions are due to the bona fide need described here, a manual method test crew must be on-site and making measurements (or in the event some unforeseen problem develops, prepared to make measurements) at least 24 hours after you make equipment or workplace modifications to increase PM emissions to levels of the high correlation runs.

Selection of Emission Limits in General

Comment: One commenter stated that according to section 112(d) EPA may not base the floors of its emission standards on a particular technology. Instead, emission standards for existing sources must be no less stringent than "the average emission limitation achieved by the best performing twelve percent of the existing sources" (for which EPA has data). The commenter further stated that for new sources, standards must be based on the emission control that is achieved in practice by the best controlled similar source. Thus, the standards proposed for emissions of dioxins, mercury, total hydrocarbons, and hydrogen chloride are not valid.

Response: First, it should be noted most of the commenter's points were recently rejected by the DC Circuit in *Sierra Club* v. *EPA* (March 2, 1999). That case holds that because MACT standards must be achievable in practice, EPA must assure that the standards are achievable "under most adverse circumstances which can reasonably be expected to recur" (assuming proper design and operation of control technology). Slip op. p. 13. The case further holds that EPA can reasonably interpret the MACT floor methodology language so long as the Agency's methodology in a particular rule allows it to "make a reasonable estimate of the performance of the top 12 percent of units", slip op. p. 7; that evaluating how a given MACT technology performs is a permissible means estimating this performance, id. at 13; and that new source standards need not be based on performance of a single source, id.

Second, the commenter provided no additional emissions data for any pollutant. The EPA has selected emission limits at the floor level of

control. Section 112(d) requires EPA to promulgate emission standards based on what is determined to be achievable through the application of techniques, methods, etc. The rule does not require the use of any specific technology to meet the emission standard. The emission standards are based on the emissions levels achieved through the application of MACT floor technologies and account for variation in the process and in the air pollution control device effectiveness.

Although the commenter did not specifically mention PM, the following discussion using PM as an example will help clarify EPA's approach in setting MACT standards for this source category. The EPA evaluated the PM MACT floor technology for both existing and new sources at proposal and determined that the MACT floor technology is properly designed and operated FFs and ESPs. Commenters provided no data to suggest that a particular design or operating mode, or an alternative technology could achieve a lower level of PM emissions on a consistent basis. Nor did EPA identify other technologies for existing or new kilns or in-line kiln/raw mills that would consistently achieve lower emission levels of PM than the NSPS limit.

As discussed in docket item number IV-B-10, the data upon which the MACT floor was based were obtained from EPA Method 5 compliance tests on kilns subject to the NSPS and represent performance of PMCDs associated with new kilns over a relatively short period (typically three 1-hour test runs). These test data were obtained at kilns equipped with well designed and operated ESPs and FFs representative of the MACT floor, which is also represented by the NSPS emission level. Method 5 testing of these cement kilns equipped with MACT floor technology showed a range of emissions up to the NSPS level. Additional Method 5 tests performed on some of the same kilns included in the MACT floor analysis showed PM variations after control as plotted in docket item IV-B-10. EPA believes that the data base—which shows cement kilns with properly designed and operated fabric filters and electrostatic precipitators achieving levels up to and including the NSPS level—adequately accounts for the variability inherent in the air pollution control technologies, and indicates what PM levels are consistently achievable in practice. See Sierra Club, slip op. p. 13. In summary, the PM emission limit reflects an emission level consistently achievable with the use of well designed and operated MACT floor technology.

The emission standard for dioxin is based on the emission level achievable through the application of the MACT floor control technology, which is exhaust gas temperature control at the inlet to the PM control device to less than 400° F, and efficient combustion. Based on data evaluated at proposal, the technology can be represented by the dual standard of 0.2 ng TEQ/dscm or 0.4 ng TEQ/dscm with a PM control device inlet temperature of 400° F or less. Since the commenter provided no additional data, the EPA has reviewed, in response to this comment, the existing test data and literature on D/F formation and concluded that the selected emission limits are consistently achievable and represent the MACT floor. Similar to the discussion above regarding the PM data, the D/F performance test data are based on short-term tests of facilities using the MACT floor technology. Thus the proposed emission limits are retained and account for normal, inherent process and air pollution control operating variability, including the use of various fuels.

As discussed in the proposal preamble, there are no standards for THC emissions from existing sources because the MACT floor for control of THC for existing sources is no control. Further, the BTF control technique for existing sources, and a floor control for new sources, would be based on the performance of precalciner/no preheater technology. However, as discussed in the proposal, EPA rejected this technology as a basis for setting THC emission limits because of the technology's negative environmental and energy impacts. The basis for the THC limit for new greenfield kilns is site selection to ensure low hydrocarbon content in feed materials. (In the proposal, the THC limit applied to all new kilns, but based on comments received, the rule has been changed such that the THC limit will only apply to new greenfield kilns. See comment responses regarding this issue for more detail.) As discussed in the proposal, this option is not available to existing (and new brownfield) kilns, in that facilities are generally tied to existing raw material sources in close proximity to the facility, so that raw material proximity (*i.e.*, transportation cost) is usually a major (indeed, critical) factor in plant site selection.

As discussed in the proposal preamble, no standards are being adopted for Hg and HCl because the MACT floor has been determined to be no control and the BTF controls were not cost effective (docket item II-B-67).

This standard was developed under section 112, not section 129, so there is no statutory requirement to establish standards for individual HAP metals. However, control of cadmium, lead, and other non-volatile and semi-volatile metal HAPs is achieved via the floor level-based emission limit for PM, which serves as a surrogate for the non-volatile and semi-volatile metals. This is supported by data from coal-fired electric utility boilers which show relatively high HAP metals (except mercury) removal with fabric filters and electrostatic precipitators. (Study of Hazardous Air Pollutant Emissions from Electric Utility Steam Generating Units—Final Report to Congress, volume 1, 453/R-98-004a, February 1998, p. 13-23 and 13-26).

PM Limits

Comment: Numerous commenters supported the use of PM as a surrogate for non-volatile HAP metals. One commenter questioned the use of PM as a surrogate for HAP metals, and suggested that the EPA require stack testing for specific metal content.

Response: The final rule retains the use of PM as a surrogate for HAP metals because the MACT floor equipment and level of control for HAP metals, *i.e.*, properly designed and operated fabric filters (FFs) and electrostatic precipitators (ESPs), is identical to that for PM. Using PM as a surrogate for specific HAP metals eliminates the cost of performance testing to comply with numerous standards for individual metals, and achieves exactly the same level of HAP metal emissions limitation.

Comment: Although many commenters were in favor of the MACT floor determination and associated emission limit for PM (see docket item, number to be assigned), several other commenters suggested that more stringent PM standards were required in recognition of the performance test data presented in the preamble showing that many affected sources achieved lower levels of PM emissions than the proposed standard.

Response: The proposed PM standards have been retained in the final rule. EPA evaluated the MACT floor technology for both existing and new sources at proposal and determined that the MACT floor technology is properly designed and operated FFs and ESPs. Commenters provided no data to support that an alternative design or technology represents a floor that could achieve a lower level of PM emissions on a consistent basis. The EPA did not identify other technologies for existing or new kilns or in-line kiln/raw mills that would consistently achieve lower emission levels of PM than the NSPS limit.

As discussed in the proposal preamble, the data upon which the MACT floor was based were obtained from EPA Method 5 compliance tests on kilns subject to the NSPS and represent performance of PMCDs associated with new kilns over a relatively short period (typically three 1-hour test runs). These test data were obtained at kilns equipped with well designed and operated ESPs and FFs representative of the MACT floor, which is also represented by the NSPS emission level. Method 5 testing of these cement kilns equipped with MACT floor technology showed a range of emissions up to the NSPS level. Additional Method 5 tests performed on some of the same kilns included in the MACT floor analysis showed PM variations after control as plotted in the reference, confirming that some operating variability is inherent. EPA believes that these data reasonably represent levels achievable in practice by the average of the best performing 12 percent of sources, and by accounting adequately for variability, further assure that the standard will be achievable under the worst forseeable circumstances consistent with proper design and operation. Sierra Club, slip. op. p. 13. In summary, the PM emission limit reflects an emission level consistently achievable with the use of well designed and operated MACT floor technology.

Comment: One commenter stated that it is feasible, both technically and economically, for portland cement kilns to use fuels and raw materials with low metals content. Because feed limits are an achievable measure that would further reduce emissions, EPA must require them.

Response: Feed and/or fossil-fuel switching has not been undertaken by any NHW kilns to reduce metals emissions, and therefore this is not a MACT floor option.

The use of feed material selection and feed material blending to achieve lower metals emissions thus is a potential beyond-the-floor technology. Cost is a consideration in the decision to go beyond-the-floor. The ability of a facility to remain cost competitive typically depends on the use of raw materials mined in close proximity to the facility. Several commenters described the economic difficulties in locating, purchasing, and transporting feed materials to existing sites; the comment to the contrary stated the opposite categorically, but provided no supporting cost, economic or technical data. See Sierra Club, slip op. p. 13 (rejecting argument that pollution prevention measures had to be included as part of a standard where costs were not adequately quantified). EPA disagrees with this comment. Cement kilns require enormous amounts of raw material, and the costs of transporting the raw material are enormous, given the volumes involved. Finding a new source of raw material will often (if not invariably) entail more costs because the source of the raw materials will be further from the facility. The Agency believes that in many cases a facility could not even remain economically viable were existing sources of raw material to become unavailable. In many cases, costs of the change in raw material would exceed air pollution benefits.[2]

In the case of NHW kilns, fuel switching is not a demonstrated metals control technology. There are no data available to EPA that indicate that this technology can or has achieved metals emission reductions from NHW kilns. A HW kiln operator can control metals via the hazardous waste fuel, but this is not an option available to NHW kiln operations.

D/F Limits

Comment: Several comments were received regarding the D/F limits in the proposed rule, which were based on the MACT floor. Some commenters suggested that a lower D/F emission limit was appropriate for both new and existing sources, based on the performance test data reported in the proposal preamble. Other commenters felt that the proposed emission limit was too stringent and unjustified, and was not representative of the MACT floor technology. Many other commenters supported the proposed standards.

Response: In response to these comments, the EPA has reviewed the existing test data and literature on D/F formation and concluded that the selected emissions limits represent the MACT floor and are consistently achievable. Again, EPA is influenced by the fact that cement kilns using the floor control technology achieved different D/F levels in their performance tests—indicating that different levels reflect normal variability of the process and control technology. Consequently, EPA is retaining the proposed standard for D/F emissions from kilns and in-line kiln/raw mills in the final rule.

In order to establish a more stringent emission limit for new kilns, it is necessary to identify a different technology to which better performance is attributable. Since EPA could not identify a different technology for new kilns, the standard is based on the range of available data, considering process and control variability.

The EPA determined that the MACT floor technology for both existing and new sources was inlet PM control device temperature control to 400° F accompanied by good combustion and process control. Based on data evaluated at proposal, the technology can be represented by the dual standard of 0.2 ng TEQ/dscm or 0.4 ng TEQ/dscm with a PM control device inlet temperature of 400° F or less. The performance test data are based on short-term tests but do indicate that all kilns will achieve the numerical emission limit of 0.4 ng TEQ/dscm with the application of the floor technology. Thus the 0.4 ng TEQ/dscm emission limit is retained to account for normal inherent process and air pollution control operating variability, including the use of various fuels, such as tires.

THC Limit

Comment: Several comments were received questioning the specification of a THC standard for reconstructed kilns or new kilns built at existing sites. Commenters asserted that these facilities could not economically locate, purchase and transport suitable feed materials to meet this standard.

Response: In recognition of these comments, the final rule has been changed to make the THC limitation applicable only to greenfield kilns, greenfield in-line kiln/raw mills and greenfield raw material dryers. EPA agrees that only greenfield sources would be able to apply MACT, which is the site selection of feed materials with low levels of naturally occurring organic material. The EPA considered the use of precalciner/no preheater kilns for THC control, (docket items II–B–47, II–B–48, II–B–67, and II–B–76), but concluded that because of negative energy impacts and increased emissions of criteria pollutants these did not provide the maximum achievable control technology for either existing or new sources. Further discussion of this technology is provided in the response to the next comment.

[2] As discussed above, EPA considered control of feed materials as a potential beyond the floor technology. EPA is aware of the Conference Report to the 1990 amendments which state that controls on feed materials are not to be part of MACT for mineral processing facilities. H.R. Rep. No. 952, 101st Cong., 2d sess. 339. However, the text of the statute does not reflect this legislative history, stating unambiguously that MACT for all sources includes eliminating HAP emissions through "substitution of materials". Section 112 (d) (2) (A). EPA is following the explicit statutory text in considering (albeit rejecting) feed control as a potential beyond the floor technology in this rule. At the very least, this is a permissible interpretation of the statute, given the statutory goal of protecting and enhancing of the Nation's air resources. Section 101 (b)(1).

Comment: Commenters stated that the proposed rulemaking provides no justification or insufficient support for the selection of 50 ppmvd as the total hydrocarbon (THC) standard for new or modified kilns. Another commenter noted that EPA has recognized that portland cement kilns use a variety of methods and technologies to control their THC emissions, including precalciner/no preheater technology and a combination of feed material selection, site location, and feed material blending. All of these methods and technologies are reflected in existing sources actual performance, on which EPA must base the floors for its THC standard. That commenter stated that under section 112(d) the THC emission standard would be much lower than 50 ppmvd.

Response: First, with regard to the methods and technologies determined to be the MACT floor, the "precalciner, no preheater" kiln is not considered maximum achievable control technology when other considerations such as energy impacts and NO_x emissions are taken into account. As explained in the preamble to the proposed rule, EPA believes that use of these technologies would not be MACT for new or existing sources because of the adverse environmental impacts associated with these technologies' use, in particular increased emissions of certain criteria pollutants. See *Portland Cement Assn* v. *Ruckelshaus*, 486 F. 2d 375, 385–96 (D.C. Cir. 1973) (if use of a particular technology results in other, adverse environmental consequences, that technology need not be considered the "best"). The proposal preamble also addressed consideration of feed material selection for existing sources as a MACT floor technology and concluded that this option is not available to existing (and new brownfield) kilns, in that facilities are generally tied to existing raw material sources in close proximity to the facility, and that raw material proximity (*i.e.*, transportation cost) is usually a major factor in plant site selection. This conclusion was supported by several commenters. The commenters described the economic difficulties in locating, purchasing, and transporting low organic feed materials to existing sites. However, for new "greenfield" kilns, feed material selection as achieved through appropriate site selection and feed material blending is considered new source MACT.

With regard to the level of standard, it is based upon data available to the Administrator and no data were provided after proposal which would justify a different standard. Based on a review of available information (docket item II–B–62, docket item II–B–75, docket item II–D–195) the EPA believes that a THC concentration of 50 ppmvd represents a level that is achievable nationwide across a broad spectrum of feed materials. This level has been retained in the final rule.

Comment: Comments were received concerning the suitability of THC as a surrogate for organic HAP, in light of the high variability in the ratio of organic HAP to THC in cement kiln exhaust gas.

Response: The EPA recognizes the variability of the data but concludes that when speciated analyses of THC were undertaken organic HAPs were found to be present. No attempt was made to correlate organic HAP emissions with THC emissions. Because of the cost savings to industry in conducting performance tests to establish compliance with a THC standard, EPA has chosen not to set standards for individual speciated organic HAPs. Further, since the source of organic HAPs is the same source as for THC (feed materials), using MACT will also control organic HAP emissions. Adopting THC as a surrogate will result in cost savings to the cement industry and to the EPA during compliance testing and monitoring.

The EPA notes further that the same issue was presented when EPA adopted standards for boilers and industrial furnaces burning hazardous waste, and in the course of that rulemaking, not only the Agency but the Science Advisory Board concluded that THC was indeed a reasonable surrogate for toxic organic emissions from cement kilns. [See 56 FR at 7153–54 (Feb. 21, 1991).]

The proposal preamble stated that POM, one of the seven pollutants listed in section 112(c)(6), would be regulated using THC as a surrogate. The final source category listing notice for section 112(d) rulemaking pursuant to section 112(c)(6) requirements shows the NHW kiln facilities portion of the portland cement source category to be a significant source of POM (63 FR 17838, April 10,1998). For this reason, and to control other THC HAPs, the final rule limits emissions of THC from new greenfield raw material dryers and new greenfield kilns and greenfield in-line kiln/raw mills at area sources as well as major sources.

Mercury Limit

Comment: Comments were received concerning the need for an emission standard to limit the emissions of mercury from NHW cement kilns. Other commenters suggested that a mercury standard be established based on a presumed floor or beyond the floor basis of fuel and/or feed material control, referring to the proposed Hazardous Waste Combustor rules and research on clean coal to reduce mercury emissions in the electric utility industry. Other commenters agreed with EPA's determination for no mercury emission limit.

Response: The EPA determined, at proposal, that the MACT floor for both new and existing sources was no control. The EPA evaluated activated carbon injection as a beyond the floor alternative for control of mercury emission from NHW kilns and in-line kiln/raw mills, and this technology was not found to be cost effective. Feed and/or fossil-fuel switching or cleaning has not been undertaken by any NHW kilns in order to reduce mercury emissions, and therefore these are not MACT floor options. For this reason feed and/or fossil-fuel switching or cleaning would be considered a beyond the MACT floor option but the EPA does not have data, nor did commenters provide data, that show that this option would consistently decrease mercury emissions. Moreover, as noted earlier, raw material feed control is prohibitively costly for this industry.

The proposed rule for Hazardous Waste Combustors included a standard of mercury. However, control of mercury in that rule would be based on controlling the amount of mercury in the hazardous waste fuel, not controlling raw material or fossil fuel. This approach is thus not available to NHW kilns. In addition, based on the Electric Utility Report to Congress on HAP emissions, EPA believes that fuel switching among different coals and from coal to oil would not consistently reduce HAP metal emissions from cement manufacturing plants. (Study of Hazardous Air Pollutant Emissions from Electric Utility Steam Generating Units—Final Report to Congress, volume 1, 453/R–98–004a, February 1998, pp. 13–1 through 13–5.) Therefore, this final rule establishes MACT for mercury as no control. However, EPA will be performing research and development work with the objective of finding more cost effective methods to reduce mercury air emissions from fossil-fuel fired electric utilities, and EPA will in the future consider whether any more cost effective methods may be appropriate as a basis for reducing mercury emissions from NHW cement kilns.

Hydrogen Chloride Limit

Comment: Comments were received stating the need for an emission standard for HCl emissions from kilns

because EPA did not provide data to show that HCl emissions pose no threat to public health and that HCl is emitted in large quantities from new and existing NHW kilns. Other commenters stated that EPA appropriately concluded that there is no basis for a MACT standard for HCl.

Response: With regard to the threat to public health comment, the EPA is conducting this rulemaking under section 112(d)(2) and therefore the decision on an emission standard is not based on health risk. Impacts to public health will be studied and addressed later under section 112(f) of the Act. The EPA determined, at proposal, that the MACT floor for both new and existing sources was no control. Further, no cost effective beyond the floor alternatives were identified. The commenters provided no new information on the use of any control technologies to limit emissions of HCl from NHW kilns. For this reason no emission standard is being established for HCl.

Opacity Limit

Comment: One commenter requested that EPA clarify the duration of both the performance test and continuous compliance demonstrations for opacity emissions.

Response: The opacity requirements in the final rule have been changed to provide for compliance on the basis of average opacity for each and every 6-minute block of operating time. This is consistent with the NSPS which is the MACT floor level of PM control upon which the standard is based. (The proposed rule incorrectly required a thirty-minute averaging time for demonstrating continuous compliance.)

Comment: Commenters expressed concern regarding the requirement to initiate a Quality Improvement Plan (QIP) and the need to track and statistically analyze opacities at levels below the standards. One commenter stated that a violation triggered by not initiating a QIP when the source was not violating an emission standard was extreme.

Response: The requirements for developing and implementing a QIP in response to a 15 percent kiln and in-line kiln/raw mill opacity trigger have been removed from the final rule. The final rule retains the opacity limit of 20 percent which if exceeded during any 6-minute period is a violation.

Comment: One commenter requested that EPA specify the scope of monitoring opacity from raw and finish mills.

Response: The EPA has clarified that the opacity limitation on gases discharged from raw mills and finish mills is restricted to the mill sweep and air separator air pollution control devices. This is consistent with the MACT floor technology for control of gases from these affected sources.

Comment: A commenter noted that the proposed rule did not specify under what conditions visual opacity monitoring should be conducted.

Response: The final rule clarifies that Method 9 (and Method 22) tests must be conducted under the highest load or capacity level reasonably expected to occur.

Comment: Numerous commenters expressed concern regarding installation, operation, calibration and maintenance of triboelectric bag leak detection systems, and that the lack of clear-cut specifications would lead to open-ended liability for owners/operators.

Response: The option for use of triboelectric bag leak detection systems for monitoring fabric filter performance is not being promulgated at this time. The EPA is presently considering this issue and may propose revised bag leak detector requirements for some source categories. Those owners or operators who want to use bag leak detection systems may petition the Administrator for approval of alternative monitoring requirements under the General Provisions.

The rule requires the owner or operator to monitor the opacity from raw mills and finish mills by conducting a daily six-minute test in accordance with Method 22, "Visual Determination of Fugitive Emissions from Material Sources and Smoke Emissions from Flares."

Owners or operators of raw mills and finish mills are required to initiate corrective action within one hour of a Method 22 test during which visible emissions are observed. A 30-minute Method 9 opacity test must be started within 24 hours of observing visible emissions.

D/F Monitoring

Comment: Several commenters suggested averaging periods for temperature limits shorter than 9 hours as proposed. One commenter preferred one-hour rolling averages. Two commenters preferred ten-minute averages as rationalized in the proposed Hazardous Waste Combustor Rule.

Response: As noted in section IV. Summary of Changes Since Proposal, the final rule, in response to these comments, has been changed to a shorter averaging period. The nine-hour block average period used for the monitoring of temperature (as well as the activated carbon injection rate, if applicable) has been changed to a three-hour rolling average period. The three-hour averaging time will help to limit disproportionate increases in D/F emissions that could be caused by very short periods of higher temperatures. A three-hour averaging time is reasonable because it is within the range of values the Agency could have selected, ranging from an instantaneous limit (i.e., no averaging period) up to a nine-hour averaging period.

The enforceable operating limit for gas stream temperature is derived from the temperature measured during 3 three-hour measurements of D/F emission. The three-hour rolling average temperature limit is established by taking the average of the one-minute average temperatures for each test run conducted during the successful Method 23 performance test, then averaging each test run average. Further, sources may petition the Administrator for an alternative averaging period or an alternative method for establishing operating parameter limits.

Comment: A commenter pointed out that the proposal would allow a source to conduct its D/F performance test with an inlet PM control device temperature below 400 degrees F, but after the performance test, the source would be allowed to operate its PM control device with an inlet temperature up to 400 degrees F.

Response: In drafting the proposal, the EPA did not intend to allow a source to operate its PM control device at a temperature higher than the temperature during the performance test, and so the EPA has clarified that the inlet temperature limit is established as and capped at the average temperature during the D/F performance test.

Comment: One commenter stated that the D/F standard should be coordinated with the rule for hazardous waste combustors.

Response: As was previously noted, the EPA has adopted a shorter temperature averaging time. To further achieve consistency with the D/F temperature requirements for HW kilns, the EPA is dropping the proposed provision which would have allowed the temperature limit to be established as the average temperature during the performance test plus 25 degrees F if the D/F level (during compliance testing) was below 0.15 ng/dscm. Further, new activated carbon injection operating parameters (nozzle pressure drop or carrier fluid flow rate) and averaging time have been added and changed, respectively, to be consistent with the requirements for the HW kilns.

Comment: A comment was received requesting a clarification of the

procedure for demonstrating compliance for in-line kiln/raw mills during time periods which span a change in raw mill operating status.

Response: After a transition period in which the status of the raw mill was changed from "off" to "on" or from "on" to "off", compliance with the operating limits for the new mode of operation begins, and the three-hour rolling average is established anew, i.e., without considering previous recordings.

Comment: Comments were received suggesting that combustion parameters (e.g., CO and THC) should be monitored to demonstrate compliance with the D/F standard.

Response: The final rule does not require monitoring of these parameters as a means of monitoring combustion because the EPA believes that THC and CO emissions from NHW cement kilns are largely due to formation outside of the combustion zone, i.e., due to the feed materials. Therefore THC and carbon monoxide emissions might not accurately reflect combustion conditions, therefore the EPA has not included CO monitoring requirements to ensure good combustion. However, the final rule has been changed to include a monitoring requirement for an inspection of combustion system components to be conducted at least annually.

THC Monitoring

Comment: The EPA received comments related to the use of THC monitoring as a means of controlling combustion related pollutants and, therefore, organic HAPs (see comment 6.4.1 in the Response to Comments Document).

Response: Stack THC emissions from kilns, in-line kiln raw mills, and raw material dryers result mainly from organic material within the feed and not from incomplete combustion. As a result, the suggested combustion monitoring alternatives are not relevant.

Performance Testing Frequency

Comment: The EPA received a comment requesting that performance tests be required more frequently than once every five years, citing other rules with more frequent testing requirements.

Response: The EPA selected the five year testing interval to synchronize the testing schedule with Title V permit renewals. The testing frequency for NHW cement kilns and other affected sources at portland cement manufacturing facilities has not been changed. The exception to this is the D/F performance tests. To maintain consistency with the requirements for HW kilns, the D/F performance testing frequency has been changed to every 2 and one half years.

Definitions

Comment: Commenters requested various changes to the definitions, including those of "alkali bypass" and "feed" to reflect cement industry practices.

Response: The final rule expands the definition of "alkali bypass", and defines "kiln exhaust gas bypass" as a synonym for alkali bypass. The final rule clarifies the definition of "feed" to include recycled cement kiln dust, consistent with past practice in enforcement of the NSPS.

Major Source Determination

Comment: Numerous comments were received regarding the use of emissions test data and emission factors (based on data provided in the proposal docket) in determining whether a source is major for hazardous air pollutants.

Response: The need for HAP-specific test methods and the validity of data obtained by various means to determine major source status are closely related. Hence this discussion covers both aspects under the overall title of major source determination.

Although emission standards are being promulgated for PM as a surrogate for semi-volatile and non-volatile HAP metals; THC as a surrogate for organic HAPs; and D/F, each facility owner/operator must make a major source determination that requires an estimate of the facility's potential to emit all HAPs from all emission sources. HCl and organic HAP emissions such as (but not limited to) benzene, toluene, hexane, formaldehyde, hexane, naphthalene, phenol, styrene, and xylenes are the main HAPs from the kiln that may cause facilities to be major sources, but HAPs emitted from all sources at the plant site should be accounted for in making a major source determination.

Comment: Some commenters questioned the need for accurate HCl measurements, since there is no HCl emission standard. Others stated that EPA should provide industry the choice of conducting testing for HCl with either Method 26, 321, or 322. They objected to the restriction that Method 26 could be used only if validated by Method 321 or 322. They also stated their belief that the Agency's decision regarding the negative bias of Method 26 was based on a limited set of test results and an insufficient investigation of the potential cause. Additional comments noted that Method 26 may actually give false positives due to inclusion of chloride salts in the calculation of measured results.

Response: As discussed above, HCl and organic HAPs emissions are the main HAPs from the kiln that will cause a source to be a major source, but HAPs emitted from all sources at the plant site, including metals emissions (discussed below) should be accounted for in making a major source determination. Accurate measurements of HCl in the kiln exhaust gases are necessary for major source determination. The EPA agrees with commenters that Method 26 may have positive biases attributable to chloride salts rather than to HCl; and negative biases due to condensation and/or removal of HCl on the filter and/or in the sampling probe. Therefore, the Agency has decided that Method 26 and 26A use without concurrent validation with M. 321 or M. 322 will only be acceptable for measuring HCl from NHW kilns to confirm that the portland cement plant is a major source. M. 26 or 26A may not be used to measure HCl in the determination that the source is an area source. Only the FTIR methods may be used in the measurement of HCl if the source claims it is not a major source.

Further, as a result of technical problems encountered by the Agency with the use of draft Method 322 (based on gas filter correlation/infrared technology) in the emission testing of lime kilns (which have a matrix similar to portland cement sources) [See Section IV.F. on Additional Test Methods for a description of the technical problems], and in response to concerns expressed by the commenters, the EPA is modifying its position regarding HCl measurements using this method in promulgating the final rule.

For the above reasons, the Agency has decided that only Methods 320 and 321 will be acceptable for measuring HCl from NHW kilns if the owner/operator wishes to claim its portland cement facility is not a major source. These methods are being promulgated as part of this rulemaking.

Comment: Commenters also requested that EPA allow cement manufacturers the option of using Method 25 (in addition to Method 18 or Method 320) for testing emissions of organic HAPs. The commenters suggest that the relatively inexpensive Method 25 could be used by cement plants that have low concentrations of organic matter in the raw material mix to verify that the plant's THC emissions are less than 10 tons/year.

Response: The focus of these commenters' point is alternatives to

measurement of organic HAPs in the process of making a major source determination. However, all HAPs (organic, HCl, metals, etc.) from all sources must be included in that determination, so it is necessary to obtain data that will allow summation of all HAP emissions to compare to the 10/25 ton per year thresholds specified in section 112 of the Clean Air Act. Depending on site-specific circumstances, EPA Method 25 may not provide sufficient information to make an accurate summation. For example, a source's determination that its THC emissions based on Method 25 or 25A are less than 10 tons per year does not necessarily signify that it is an area source; the source may be a major source based on the 25 ton per year criterion when all other HAP emissions are summed with the THC. If the source's THC emissions are over 10 tons per year, the source may choose to conduct emissions tests using EPA Method 320 to make a determination of actual organic HAP emissions. However, in lieu of conducting Method 320 emissions tests, the source could use Method 25A, but the source would have to assume that the mass emission rate (as propane) from all combustion sources combined at the site is attributed to one organic HAP. This amount would then have to be compared to the 10 ton per year threshold for one HAP. To summarize, in addition to accounting for organic HAPs (either through Method 320 testing or assuming all THC is one organic HAP), accurate measurements of HCl in the kiln exhaust gases would be necessary for major source determination, as well as measurements of HAP metals (see below), to obtain data that will allow summation of all HAP emissions to compare to the 10/25 ton per year thresholds.

Comment: Another commenter requested that EPA allow the use of an alternative to what they perceived as an EPA-suggested emission factor for metal emissions, of one percent of PM emissions, to determine major source status.

Response: If after the source determines that it is not major because it does not meet either the 10/25 ton per year thresholds based on the summation of HCl and organic HAP emissions from all sources at the plant, the source would need to determine its HAP metals emissions from all sources at the facility as well, to make a determination that it is not a major source. The use of a "one percent HAP metals in PM" emission factor assumption will not provide definitive evidence that the source is an area source. However, the Agency would allow sources to forego the speciated HAP metals emission tests (through the use of Method 29) if it is assumed that 1 percent of the total PM emissions from all sources at the site are metal HAPs. This assumed amount of metal HAPs emissions would be added to the amount of HCl and organic HAPs emitted (determined as described above), and this total amount would then be compared to the 25 ton per year threshold for all HAPs combined. To reiterate, each facility owner/operator must make a major source determination that requires an estimate of the facility's potential to emit all HAPs from all emission sources, accounting for HCl, organic HAPs (either through speciation of organic HAPs or assuming all THC is one organic HAP), and metals (either through speciation of metal HAPs or assuming 1 percent of PM is metal HAP), to allow summation of all HAP emissions to compare to the 10/25 ton per year thresholds.

Voluntary Consensus Standards

Comment: One commenter (IV-D-17) stated that EPA's actions (in developing and proposing the precursor to EPA Fourier Transform Infrared Spectroscopy [FTIR] test method 320) directly conflict with the guidance of and directives of the 1995 National Technology Transfer and Advancement Act and the Office of Management and Budget (OMB) Circular A-119 because: (1) the American Society of Testing and Materials (ASTM) FTIR consensus based test method is available, and (2) the EPA Emission Measurement Center (EMC) representatives were made aware of the development of the ASTM method and chose duplicative measures in developing and proposing the precursor to EPA FTIR test method 320. (The OMB Circular states specifically that "If a voluntary consensus standards body is in the process of developing or adopting a voluntary consensus standard that would likely be lawful and practical for an agency to use, and would be developed on a timely basis, an agency should not be developing its own government unique standard and instead should be participating in the activities of the voluntary consensus standards body.")

Response: The Agency has been actively developing extractive FTIR-based methods for HAPs since 1992. Methods 320 and 321 are direct products of this long-term effort to apply an innovative approach to emissions measurement in the form of extractive FTIR. The Agency has tested these methods in the laboratory and in the field extensively (conducting testing at two portland cement facilities), and has conducted multiple validation tests of these methods. The Portland Cement Association (PCA), in representing various members of the regulated industry, has conducted its own series of validation tests of these methods. Actually, Method 321 was developed and validated by PCA, and has been adopted by the Agency as Method 321. Agency personnel informed ASTM in 1996 that the Agency methods were in active development, and an ASTM standard seemed redundant. Additionally, the ASTM standard has not undergone field validation, which is essential in establishing the precision and accuracy of any test method.

The Agency has conducted a review of the ASTM method. While the ASTM method is in some ways similar to Method 320, the ASTM method is not sufficiently detailed to document proper application, and does not contain the quality assurance procedures the Agency requires in compliance methods. Specifically, the ASTM method does not address specific calibration transfer standards, nor does it address the preparation of reference spectra. Therefore, EPA has determined that it is impractical to adopt the ASTM method at this time and is promulgating Method 320.

Pollution Prevention

Comment: Comments were received stating that the proposed rule did not contain measures that prevent pollution or reduce energy requirements, and suggested specific pollution prevention measures, including process modifications, taken by specific facilities.

Response: The NESHAP is written in terms of emissions standards based on MACT floor technologies and allows pollution prevention techniques to achieve compliance. The EPA considered pollution prevention options available and the basis for the standard for THC for new greenfield sites, feed material selection, is a pollution prevention measure. In addition, the final standard includes a monitoring requirement for inspection of the combustion system components of kilns and in-line kiln raw mills (an energy efficiency and pollution prevention measure) and standards for PM from product handling affected sources (which leads to improved recovery of salable product and pollution prevention). Furthermore, the final standard clarifies that recovered cement kiln dust can be included in the calculation of kiln feed (encouraging recycling, improved PM control and pollution prevention).

Control Cost Impacts and Data Evaluation

Comment: Comments were received concerning the EPA's control cost estimates, including the assumptions regarding the number of sources requiring upgrades to meet the standards for PM and D/F, and the capital expenditures necessary to meet the standard. In particular one commenter projected that capital costs would exceed the threshold which triggers Executive Order 12866. Another commenter questioned the lack of cost data on upgrades to PMCDs for material handling affected sources.

Response: The costs to achieve compliance are expected to be highly site-specific and vary significantly. The commenters did not provide any details regarding their estimates of the cost to comply, so the EPA is unable to determine whether the commenters' cost estimates were limited to those costs necessary to comply with the provisions of the NESHAP.

The EPA has reviewed cost data provided by the Portland Cement Association prior to proposal. The foundation for the cost estimates, and initial point of criticism of EPA's cost estimates, is the model plant characteristics. For example, the APCA report provided a review of the model plant characteristics and suggested that the design characteristics for each model be 20 to 25 percent higher than the annual average production rate basis for the model. In particular, the APCA report stated that the EPA model plant gas flows for wet process and long dry kilns were 25 to 30 percent too low, based on their consultant's design practice.

The EPA developed design characteristics for the model plants based on data provided to the Agency in ICRs and test reports (docket items II-B-24 and II-B-37). For a kiln with a given nominal production rate that might be found in several different plants, variations in gas flow rates would be expected. The EPA used the flow rate and production data from actual installations to develop production rate versus gas flow graphs to establish the model plant characteristics. Owners may elect to design their upgrades or new equipment to accommodate higher production rates, but those costs and other impacts are not attributable to compliance with the MACT standards. EPA did not include costs associated with upgrading equipment used to control emissions from materials handling affected sources, as these affected sources have been subject to the NSPS for many years (a longer period than the expected life of these affected sources), and compliance with the NESHAP, which is equivalent to the NSPS for these affected sources would not impose additional costs.

The basis of the control costs for model plants estimated in the docket memoranda and proposal preamble is the Office of Air Quality Planning and Standards Cost Manual. The cost algorithms in the manual were derived from control equipment vendor quotes, standard cost estimating factors, and contractor experience. Installation costs, utilities, maintenance, and other operating costs were estimated and included for impact estimation. The EPA maintains that the costs provided in the proposal preamble are a reasonable basis for projecting the national impacts of the these rules.

VII. Administrative Requirements

A. Docket

A record has been established for this rulemaking under docket number A-92-53. This record includes information considered by the EPA in the development of the promulgated standards. A public version of this record, which does not include any information included as confidential business information, is available for inspection from 8:00 a.m. to 5:30 p.m. Monday-Friday, excluding legal holidays. The public record is located in the Air & Radiation Docket & Information Center, Room M1500, 401 M Street S.W., Washington, D.C. 20460.

Response-to-Comment Document

The response-to-comment document for the promulgated standards contains a summary of all public comments received following proposal of the rule and the EPA's response to these comments. This document is located in the docket (Docket Item No. V-C-1) and is available for downloading from the Technology Transfer Network (TTN). The TTN is one of the EPA's electronic bulletin boards. The TTN provides information from EPA in various areas of air pollution technology or policy. The service is free except for the cost of a phone call. Dial (919) 541-5742 for up to a 14,400 bps modem, or connect through the internet to the following address: "www.epa.gov/ttn/oarpg". If more information on the Technology Transfer Network is needed, call the HELP line at (919) 541-5384.

B. Executive Order 12866

Under Executive Order 12866 (58 FR 5173, October 4, 1993), the EPA must determine whether the regulatory action is "significant" and therefore subject to Office of Management and Budget (OMB) review and the requirements of the Executive Order. The Executive Order defines "significant regulatory action" as one that is likely to result in standards that may:

(1) Have an annual effect on the economy of $100 million or more or adversely affect, in a material way, the economy, a sector of the economy, productivity, competition, jobs, the environment, public health or safety, or State, local, or tribal governments or communities;

(2) Create a serious inconsistency or otherwise interfere with an action taken or planned by another agency;

(3) Materially alter the budgetary impact of entitlement, grants, user fees, or loan programs or the rights and obligations of recipients thereof; or

(4) Raise novel legal or policy issues arising out of legal mandates, the President's priorities, or the principles set forth in the Executive Order.

Because the projected annual costs (including monitoring) for this NESHAP are $37 million, a regulatory impact analysis has not been prepared. However this action is considered a "significant regulatory action" within the meaning of Executive Order 12866 (primarily due to this action's overlap with the Hazardous Waste Combustor MACT standard), and the promulgated regulation presented in this notice was submitted to the OMB for review. Any written comments are included in the docket listed at the beginning of today's notice under **ADDRESSESS.** The docket is available for public inspection at the EPA's Air Docket Section, which is listed in the **ADDRESSES** section of this preamble.

C. Executive Order 12875: Enhancing Intergovernmental Partnerships

Under Executive Order 12875, the EPA may not issue a regulation that is not required by statute and that creates a mandate upon a State, local or tribal government, unless the Federal government provides the funds necessary to pay the direct compliance costs incurred by those governments, or EPA consults with those governments. If EPA complies by consulting, Executive Order 12875 requires EPA to provide to the Office of Management and Budget a description of the extent of EPA's prior consultation with representatives of affected State, local and tribal governments, the nature of their concerns, copies of any written communications from the governments, and a statement supporting the need to issue the regulation. In addition, Executive Order 12875 requires EPA to

develop an effective process permitting elected officials and other representatives of State, local and tribal governments "to provide meaningful and timely input in the development of regulatory proposals containing significant unfunded mandates."

Today's rule does not create a mandate on State, local or tribal governments. The rule does not impose any enforceable duties on these entities. Accordingly, the requirements of section 1(a) of Executive Order 12875 do not apply to this rule.

D. Unfunded Mandates Reform Act

Title II of the Unfunded Mandates Reform Act of 1995 (UMRA), Public Law 104–4, establishes requirements for Federal agencies to assess the effects of their regulatory actions on State, local, and tribal governments and the private sector. Under section 202 of the UMRA, the EPA generally must prepare a written statement, including a cost-benefit analysis, for proposed and final rules with "Federal mandates" that may result in expenditures to State, local, and tribal governments, in the aggregate, or to the private sector, of $100 million or more in any one year. Before promulgating an EPA rule for which a written statement is needed, section 205 of the UMRA generally requires the EPA to identify and consider a reasonable number of regulatory alternatives and adopt the least costly, most cost-effective or least burdensome alternative that achieves the objectives of the rule. The provisions of section 205 do not apply when they are inconsistent with applicable law. Moreover, section 205 allows the EPA to adopt an alternative other than the least costly, most cost-effective, or least burdensome alternative if the Administrator publishes with the final rule an explanation why that alternative was not adopted. Before the EPA establishes any regulatory requirements that may significantly or uniquely affect small governments, including tribal governments, it must have developed under section 203 of the UMRA a small government agency plan. The plan must provide for notifying potentially affected small governments, enabling officials of affected small governments to have meaningful and timely input in the development of EPA regulatory proposals with significant Federal intergovernmental mandates, and informing, educating, and advising small governments on compliance with the regulatory requirements.

The EPA has determined that this rule does not contain a Federal mandate that may result in expenditures of $100 million or more for State, local, and tribal governments, in aggregate, or the private sector in any one year, nor does the rule significantly or uniquely impact small governments, because it contains no requirements that apply to such governments or impose obligations upon them. Thus, the requirements of the UMRA do not apply to this rule.

E. Regulatory Flexibility Act

The EPA has determined that it is not necessary to prepare a regulatory flexibility analysis in connection with this final rule. As discussed earlier in the response to comments section of the preamble, the EPA has determined that this rule will not have a significant economic impact on a substantial number of small entities.

Although the rule will not have a significant impact on a substantial number of small entities, the EPA worked with portland cement small entities throughout the rulemaking process. Meetings were held on a regular basis with the Portland Cement Association (PCA) and industry representatives, including both small and large firms, to discuss the development of the rule, exchange information and data, solicit comments on draft rule requirements, and provide a list of the small firms. In addition, some cement industry representatives formed a group called the "Small Cement Company MACT Coalition", which designated the PCA as its representative in meetings with the EPA concerning the rulemaking for the portland cement industry.

The promulgated emission standards are representative of the floor level of emision control, which is the minimum level of control allowed under the Act. Further, the costs of required performance testing and monitoring have been minimized by specifying emission limits and monitoring parameters in terms of surrogates for HAP emissions, which are less costly to measure. The Agency has also tried to make the rule "user friendly," with language that is easy to understand by all of the regulated community. EPA is also allowing affected firms up to 3 years from the effective date of the final rule to comply, which could lessen capital availability concerns. An extra year may be granted by the Administrator or delegated regulatory authority if necessary to install controls. Further, EPA has deferred the compliance date for installing PM CEMs pending a future proposed rulemaking.

F. Submission to Congress and the General Accounting Office

The Congressional Review Act, 5 U.S.C. 801 *et seq.*, as added by the Small Business Regulatory Enforcement Fairness Act of 1996, generally provides that before a rule may take effect, the agency promulgating the rule must submit a rule report, which includes a copy of the rule, to each House of the Congress and to the Comptroller General of the United States. The EPA will submit a report containing this rule and other required information to the U.S. Senate, the U.S. House of Representatives, and the Comptroller General of the United States prior to publication of the rule in the **Federal Register**. This rule is not a "major rule" as defined by 5 U.S.C. § 804(2).

G. Paperwork Reduction Act

The information collection requirements in this rule are being submitted for approval to the Office of Management and Budget (OMB) under the *Paperwork Reduction Act*, 44 U.S.C. 3501 *et seq.* An Information Collection Request (ICR) document has been prepared by EPA (ICR No. 1801.02) and a copy may be obtained from Sandy Farmer by mail at OP Regulatory Information Division; U.S. Environmental Protection Agency (2137); 401 M St., S.W.; Washington, DC 20460, by email at farmer.sandy@epamail.epa.gov, or by calling (202) 260–2740. A copy may also be downloaded off the internet at http://www.epa.gov/icr. The information requirements are not effective until OMB approves them.

The EPA is required under section 112 (d) of the Clean Air Act to regulate emissions of HAPs listed in section 112 (b). The requested information is needed as part of the overall compliance and enforcement program. The ICR requires that portland cement manufacturing plants retain records of parameter and emissions monitoring data at facilities for a period of 5 years, which is consistent with the General Provisions to 40 CFR part 63 and the permit requirements under 40 CFR part 70. All sources subject to this rule will be required to obtain operating permits either through the State-approved permitting program or, if one does not exist, in accordance with the provisions of 40 CFR part 71, when promulgated.

The public reporting burden for this collection of information is estimated to average 2148 hours per respondent per year for an estimated 36 respondents. This estimate includes performance tests and reports (with repeat tests where needed); one-time preparation of an operation and maintenance plan with semiannual reports of any event where the procedures in the plan were not followed; semiannual excess emissions reports; notifications; and

recordkeeping. The total annualized capital costs associated with monitoring requirements over the three-year period of the ICR is estimated at $750,000. This estimate includes the capital and startup costs associated with installation of required continuous monitoring equipment for those affected sources subject to the standard. The total operation and maintenance cost is estimated at $682,000 per year. Burden means the total time, effort, or financial resources expended by persons to generate, maintain, retain, or disclose or provide information to or for a Federal agency. This includes the time needed to review instructions; develop, acquire, install, and utilize technology and systems for the purposes of collecting, validating, and verifying information, processing and maintaining information, and disclosing and providing information; adjust the existing ways to comply with any previously applicable instructions and requirements; train personnel to be able to respond to a collection of information; search data sources; complete and review the collection of information; and transmit or otherwise disclose the information.

An Agency may not conduct or sponsor, and a person is not required to respond to a collection of information unless it displays a currently valid OMB control number. The OMB control numbers for EPA's regulations are listed in 40 CFR Part 9 and 48 CFR Chapter 15.

H. Pollution Prevention Act

During the development of this rule, the EPA explored opportunities to eliminate or reduce emissions through the application of new processes or work practices. This NESHAP includes a monitoring requirement for an inspection of the components of the combustion system of each kiln and in-line kiln raw mill to be conducted at least once per year. Such an inspection will promote fuel efficiency and decrease the formation of combustion related pollutants.

I. National Technology Transfer and Advancement Act

Section 12(d) of the National Technology Transfer and Advancement Act (NTTAA) directs all Federal agencies to use voluntary consensus standards in regulatory and procurement activities unless to do so would be inconsistent with applicable law or otherwise impracticable. Voluntary consensus standards are technical standards (e.g., materials specifications, test methods, sampling procedures, and business practices) developed or adopted by one or more voluntary consensus bodies. The NTTAA requires Federal agencies to provide Congress, through annual reports to OMB, with explanations when an agency does not use available and applicable voluntary consensus standards.

Consistent with the NTTAA, the EPA conducted a search to identify voluntary consensus standards. The search identified 21 voluntary consensus standards that appeared to have possible use in lieu of EPA standard reference methods. However, after reviewing available standards, EPA determined that 14 of the candidate consensus standards identified for measuring emissions of the HAPs or surrogates subject to emission standards in the rule would not be practical due to lack of equivalency, documentation, validation data and other important technical and policy considerations. Six of the remaining candidate consensus standards are new standards under development that EPA plans to follow, review and consider adopting at a later date.

One consensus standard, ASTM D6216–98, appears to be practical for EPA use in lieu of EPA Performance Specification 1 (See 40 CFR Part 60, Appendix B). On September 23, 1998, EPA proposed incorporating by reference ASTM D6216–98 under a separate rulemaking (63 FR 50824) that would allow broader use and application of this consensus standard. EPA plans to complete this action in the near future. For these reasons, EPA defers taking action in this rulemaking that would adopt D6216–98 in lieu of PS–1 requirements as it would be impractical for EPA to act independently from other rulemaking activity already undergoing notice and comment.

Additionally, EPA received comments that ASTM FTIR Standard D6348 should be used in lieu of EPA's proposed Fourier transform infrared spectroscopy (FTIR) emission test methods. EPA has determined for a number of reasons that the ASTM Standard D6348 is one of the 14 standards determined to be impractical to adopt for the purposes of this rulemaking. EPA review comments on ASTM Standard D6348 are included in the docket for this rulemaking and summarized in the response to comments section of this preamble. ASTM has also been advised of the reasons for impracticality and ASTM Subcommittee D22–03 is now undertaking a revision of the ASTM standard. Upon demonstration of technical equivalency with the EPA FTIR methods, the revised ASTM standard could be incorporated by reference for EPA regulatory applicability at a later date.

This rule requires standard EPA methods known to the industry and States. Approved alternative methods also may be used with prior EPA approval.

J. Executive Order 13045

Executive Order 13045 applies to any rule that EPA determines (1) is "economically significant" as defined under Executive Order 12866, and (2) the environmental health or safety risk addressed by the rule has a disproportionate effect on children. If the regulatory action meets both criteria, the Agency must evaluate the environmental health or safety effects of the planned rule on children and explain why the planned regulation is preferable to other potentially effective and reasonably feasible alternatives considered by the Agency.

This final rule is not subject to E.O. 13045, entitled "Protection of Children from Environmental Health Risks and Safety Risks" (62 FR 19885, April 23, 1997), because it is not an economically significant regulatory action as defined by Executive Order 12866, and it does not address an environmental health or safety risk that would have a disproportionate effect on children.

K. Executive Order 13084: Consultation and Coordination With Indian Tribal Governments

Under Executive Order 13084, EPA may not issue a regulation that is not required by statute, that significantly or uniquely affects the communities of Indian tribal governments, and that imposes substantial direct compliance costs on those communities, unless the Federal government provides the funds necessary to pay the direct compliance costs incurred by the tribal governments, or EPA consults with those governments. If EPA complies by consulting, Executive Order 13084 requires EPA to provide to the Office of Management and Budget, in a separately identified section of the preamble to the rule, a description of the extent of EPA's prior consultation with representatives of affected tribal governments, a summary of the nature of their concerns, and a statement supporting the need to issue the regulation. In addition, Executive Order 13084 requires EPA to develop an effective process permitting elected officials and other representatives of Indian tribal governments "to provide meaningful and timely input in the development of regulatory policies on matters that

significantly or uniquely affect their communities."

Today's rule does not significantly or uniquely affect the communities of Indian tribal governments. Accordingly, the requirements of section 3(b) of Executive Order 13084 do not apply to this rule.

List of Subjects in 40 CFR Part 63

Environmental protection, Air pollution control, Hazardous substances, Portland cement manufacturing, Reporting and recordkeeping requirements.

Dated: May 14, 1999.

Carol M. Browner,

Administrator.

For the reasons set out in the preamble, part 63 of title 40, chapter 1 of the Code of Federal Regulations is amended as follows:

PART 63—NATIONAL EMISSION STANDARDS FOR HAZARDOUS AIR POLLUTANTS FOR SOURCE CATEGORIES

1. The authority citation for part 63 continues to read as follows:

Authority: 42 U.S.C. 7401, *et seq.*

2. Part 63 is amended by adding a new subpart LLL, consisting of §§ 63.1340 through 63.1359 to read as follows:

Subpart LLL—National Emission Standards for Hazardous Air Pollutants From the Portland Cement Manufacturing Industry

General

Sec.

63.1340 Applicability and designation of affected sources.
63.1341 Definitions.

Emission Standards and Operating Limits

63.1342 Standards: General.
63.1343 Standards for kilns and in-line kiln/raw mills.
63.1344 Operating limits for kilns and in-line kiln/raw mills.
63.1345 Standards for clinker coolers.
63.1346 Standards for new and reconstructed raw material dryers.
63.1347 Standards for raw and finish mills.
63.1348 Standards for affected sources other than kilns: in-line kiln raw mills; clinker coolers; new and reconstructed raw material dryers; and raw and finish mills.

Monitoring and Compliance Provisions

63.1349 Performance testing requirements.
63.1350 Monitoring requirements.
63.1351 Compliance dates.
63.1352 Additional test methods.

Notification, Reporting and Recordkeeping

63.1353 Notification requirements.
63.1354 Reporting requirements.
63.1355 Recordkeeping requirements.

Other

63.1356 Exemption from new source performance standards.
63.1357 Temporary, conditioned exemption from particulate and opacity standards.
63.1358 Delegation of authority.
63.1359 [Reserved]

Table 1 to Subpart LLL of Part 63—Applicability of General Provisions

Subpart LLL—National Emission Standards for Hazardous Air Pollutants From the Portland Cement Manufacturing Industry

General

§ 63.1340 Applicability and designation of affected sources.

(a) Except as specified in paragraphs (b) and (c) of this section, the provisions of this subpart apply to each new and existing portland cement plant which is a major source or an area source as defined in § 63.2.

(b) The affected sources subject to this subpart are:

(1) Each kiln and each in-line kiln/raw mill at any major or area source, including alkali bypasses, except for kilns and in-line kiln/raw mills that burn hazardous waste and are subject to and regulated under subpart EEE of this part;

(2) Each clinker cooler at any portland cement plant which is a major source;

(3) Each raw mill at any portland cement plant which is a major source;

(4) Each finish mill at any portland cement plant which is a major source;

(5) Each raw material dryer at any portland cement plant which is a major source and each greenfield raw material dryer at any portland cement plant which is a major or area source;

(6) Each raw material, clinker, or finished product storage bin at any portland cement plant which is a major source;

(7) Each conveying system transfer point at any portland cement plant which is a major source;

(8) Each bagging system at any portland cement plant which is a major source; and

(9) Each bulk loading or unloading system at any portland cement plant which is a major source.

(c) For portland cement plants with on-site nonmetallic mineral processing facilities, the first affected source in the sequence of materials handling operations subject to this subpart is the raw material storage, which is just prior to the raw mill. The primary and secondary crushers and any other equipment of the on-site nonmetallic mineral processing plant which precedes the raw material storage are not subject to this subpart. Furthermore, the first conveyor transfer point subject to this subpart is the transfer point associated with the conveyor transferring material from the raw material storage to the raw mill.

(d) The owner or operator of any affected source subject to the provisions of this subpart is subject to title V permitting requirements.

§ 63.1341 Definitions.

All terms used in this subpart that are not defined in this section have the meaning given to them in the CAA and in subpart A of this part.

Alkali bypass means a duct between the feed end of the kiln and the preheater tower through which a portion of the kiln exit gas stream is withdrawn and quickly cooled by air or water to avoid excessive buildup of alkali, chloride and/or sulfur on the raw feed. This may also be referred to as the "kiln exhaust gas bypass".

Bagging system means the equipment which fills bags with portland cement.

Clinker cooler means equipment into which clinker product leaving the kiln is placed to be cooled by air supplied by a forced draft or natural draft supply system.

Continuous monitor means a device which continuously samples the regulated parameter specified in § 63.1350 of this subpart without interruption, evaluates the detector response at least once every 15 seconds, and computes and records the average value at least every 60 seconds, except during allowable periods of calibration and except as defined otherwise by the continuous emission monitoring system performance specifications in appendix B to part 60 of this chapter.

Conveying system means a device for transporting materials from one piece of equipment or location to another location within a facility. Conveying systems include but are not limited to the following: feeders, belt conveyors, bucket elevators and pneumatic systems.

Conveying system transfer point means a point where any material including but not limited to feed material, fuel, clinker or product, is transferred to or from a conveying system, or between separate parts of a conveying system.

Dioxins and furans (D/F) means tetra-, penta-, hexa-, hepta-, and octa-chlorinated dibenzo dioxins and furans.

Facility means all contiguous or adjoining property that is under common ownership or control, including properties that are separated only by a road or other public right-of-way.

Feed means the prepared and mixed materials, which include but are not limited to materials such as limestone, clay, shale, sand, iron ore, mill scale, cement kiln dust and flyash, that are fed to the kiln. Feed does not include the fuels used in the kiln to produce heat to form the clinker product.

Finish mill means a roll crusher, ball and tube mill or other size reduction equipment used to grind clinker to a fine powder. Gypsum and other materials may be added to and blended with clinker in a finish mill. The finish mill also includes the air separator associated with the finish mill.

Greenfield kiln, in-line kiln/raw mill, or raw material dryer means a kiln, in-line kiln/raw mill, or raw material dryer for which construction is commenced at a plant site (where no kilns and no in-line kiln/raw mills were in operation at any time prior to March 24, 1998) after March 24, 1998.

Hazardous waste is defined in § 261.3 of this chapter.

In-line kiln/raw mill means a system in a portland cement production process where a dry kiln system is integrated with the raw mill so that all or a portion of the kiln exhaust gases are used to perform the drying operation of the raw mill, with no auxiliary heat source used. In this system the kiln is capable of operating without the raw mill operating, but the raw mill cannot operate without the kiln gases, and consequently, the raw mill does not generate a separate exhaust gas stream.

Kiln means a device, including any associated preheater or precalciner devices, that produces clinker by heating limestone and other materials for subsequent production of portland cement.

Kiln exhaust gas bypass means alkali bypass.

Monovent means an exhaust configuration of a building or emission control device (e. g. positive pressure fabric filter) that extends the length of the structure and has a width very small in relation to its length (i. e., length to width ratio is typically greater than 5:1). The exhaust may be an open vent with or without a roof, louvered vents, or a combination of such features.

New brownfield kiln, in-line kiln raw mill, or raw material dryer means a kiln, in-line kiln/raw mill or raw material dryer for which construction is commenced at a plant site (where kilns and/or in-line kiln/raw mills were in operation prior to March 24, 1998) after March 24, 1998.

One-minute average means the average of thermocouple or other sensor responses calculated at least every 60 seconds from responses obtained at least once during each consecutive 15 second period.

Portland cement plant means any facility manufacturing portland cement.

Raw material dryer means an impact dryer, drum dryer, paddle-equipped rapid dryer, air separator, or other equipment used to reduce the moisture content of feed materials.

Raw mill means a ball and tube mill, vertical roller mill or other size reduction equipment, that is not part of an in-line kiln/raw mill, used to grind feed to the appropriate size. Moisture may be added or removed from the feed during the grinding operation. If the raw mill is used to remove moisture from feed materials, it is also, by definition, a raw material dryer. The raw mill also includes the air separator associated with the raw mill.

Rolling average means the average of all one-minute averages over the averaging period.

Run average means the average of the one-minute parameter values for a run.

TEQ means the international method of expressing toxicity equivalents for dioxins and furans as defined in U.S. EPA, Interim Procedures for Estimating Risks Associated with Exposures to Mixtures of Chlorinated Dibenzo-p-dioxins and -dibenzofurans (CDDs and CDFs) and 1989 Update, March 1989.

Emission Standards and Operating Limits

§ 63.1342 Standards: General.

(a) Table 1 to this subpart provides cross references to the 40 CFR part 63, subpart A, general provisions, indicating the applicability of the general provisions requirements to subpart LLL.

(b) Table 1 of this section provides a summary of emission limits and operating limits of this subpart.

TABLE 1 TO § 63.1342.—EMISSION LIMITS AND OPERATING LIMITS

Affected source	Pollutant or opacity	Emission and operating limit
All kilns and in-line kiln/raw mills at major sources (including alkali bypass).	PM	0.15 kg/Mg of feed (dry basis).
	Opacity	20 percent.
All kilns and in-line kiln/raw mills at major and area sources (including alkali bypass).	D/F	0.20 ng TEQ/dscm or 0.40 ng TEQ/dscm when the average of the performance test run average particulate matter control device (PMCD) inlet temperatures is 204° C or less. [Corrected to 7 percent oxygen] Operate such that the three-hour rolling average PMCD inlet temperature is no greater than the temperature established at performance test. If activated carbon injection is used: Operate such that the three-hour rolling average activated carbon injection rate is no less than rate established at performance test. Operate such that either the carrier gas flow rate or carrier gas pressure drop exceeds the value established at performance test. Inject carbon of equivalent specifications to that used at performance test.
New greenfield kilns and in-line kiln/raw mills at major and area sources.	THC	50 ppmvd, as propane, corrected to 7 percent oxygen.
All clinker coolers at major sources	PM	0.050 kg/Mg of feed (dry basis)
	Opacity	10 percent.
All raw mills and finish mills at major sources	Opacity	10 percent.
New greenfield raw material dryers at major and area sources.	THC	50 ppmvd, as propane, corrected to 7 percent oxygen.
All raw material dryers and material handling points at major sources.	Opacity	10 percent.

§ 63.1343 Standards for kilns and in-line kiln/raw mills.

(a) *General.* The provisions in this section apply to each kiln, each in-line kiln/raw mill, and any alkali bypass associated with that kiln or in-line kiln/raw mill.

(b) *Existing, reconstructed, or new brownfield/major sources.* No owner or operator of an existing, reconstructed or new brownfield kiln or an existing, reconstructed or new brownfield in-line kiln/raw mill at a facility that is a major source subject to the provisions of this subpart shall cause to be discharged into the atmosphere from these affected sources, any gases which:

(1) Contain particulate matter (PM) in excess of 0.15 kg per Mg (0.30 lb per ton) of feed (dry basis) to the kiln. When there is an alkali bypass associated with a kiln or in-line kiln/raw mill, the combined particulate matter emissions from the kiln or in-line kiln/raw mill and the alkali bypass are subject to this emission limit.

(2) Exhibit opacity greater than 20 percent.

(3) Contain D/F in excess of:

(i) 0.20 ng per dscm (8.7×10^{-11} gr per dscf) (TEQ) corrected to seven percent oxygen; or

(ii) 0.40 ng per dscm (1.7×10^{-10} gr per dscf) (TEQ) corrected to seven percent oxygen, when the average of the performance test run average temperatures at the inlet to the particulate matter control device is 204 °C (400 °F) or less.

(c) *Greenfield/major sources.* No owner or operator that commences construction of a greenfield kiln or greenfield inline kiln/raw mill at a facility which is a major source subject to the provisions of this subpart shall cause to be discharged into the atmosphere from these affected sources any gases which:

(1) Contain particulate matter in excess of 0.15 kg per Mg (0.30 lb per ton) of feed (dry basis) to the kiln. When there is an alkali bypass associated with a kiln or in-line kiln/raw mill, the combined particulate matter emissions from the kiln or in-line kiln/raw mill and the bypass stack are subject to this emission limit.

(2) Exhibit opacity greater than 20 percent.

(3) Contain D/F in excess of:

(i) 0.20 ng per dscm (8.7×10^{-11} gr per dscf) (TEQ) corrected to seven percent oxygen; or

(ii) 0.40 ng per dscm (1.7×10^{-10} gr per dscf) (TEQ) corrected to seven percent oxygen, when the average of the performance test run average temperatures at the inlet to the particulate matter control device is 204 °C (400 °F) or less.

(4) Contain total hydrocarbon (THC), from the main exhaust of the kiln or in-line kiln/raw mill, in excess of 50 ppmvd as propane, corrected to seven percent oxygen.

(d) *Existing, reconstructed, or new brownfield/area sources.* No owner or operator of an existing, reconstructed, or new brownfield kiln or an existing, reconstructed or new brownfield in-line kiln/raw mill at a facility that is an area source subject to the provisions of this subpart shall cause to be discharged into the atmosphere from these affected sources any gases which contain D/F in excess of:

(1) 0.20 ng per dscm (8.7×10^{-11} gr per dscf) (TEQ) corrected to seven percent oxygen; or

(2) 0.40 ng per dscm (1.7×10^{-10} gr per dscf) (TEQ) corrected to seven percent oxygen, when the average of the performance test run average temperatures at the inlet to the particulate matter control device is 204 °C (400 °F) or less.

(e) *Greenfield/area sources.* No owner or operator of a greenfield kiln or a greenfield in-line kiln/raw mill at a facility that is an area source subject to the provisions of this subpart shall cause to be discharged into the atmosphere from these affected sources any gases which:

(1) Contain D/F in excess of:

(i) 0.20 ng per dscm (8.7×10^{-11} gr per dscf) (TEQ) corrected to seven percent oxygen; or

(ii) 0.40 ng per dscm (1.7×10^{-11} gr per dscf) (TEQ) corrected to seven percent oxygen, when the average of the performance test run average temperatures at the inlet to the particulate matter control device is 204 °C (400 °F) or less.

(2) Contain THC, from the main exhaust of the kiln or in-line kiln/raw mill, in excess of 50 ppmvd as propane, corrected to seven percent oxygen.

§ 63.1344 Operating limits for kilns and in-line kiln/raw mills.

(a) The owner or operator of a kiln subject to a D/F emission limitation under § 63.1343 must operate the kiln such that the temperature of the gas at the inlet to the kiln particulate matter control device (PMCD) and alkali bypass PMCD, if applicable, does not exceed the applicable temperature limit specified in paragraph (b) of this section. The owner or operator of an in-line kiln/raw mill subject to a D/F emission limitation under § 63.1343 must operate the in-line kiln/raw mill, such that:

(1) When the raw mill of the in-line kiln/raw mill is operating, the applicable temperature limit for the main in-line kiln/raw mill exhaust, specified in paragraph (b) of this section and established during the performance test when the raw mill was operating is not exceeded.

(2) When the raw mill of the in-line kiln/raw mill is not operating, the applicable temperature limit for the main in-line kiln/raw mill exhaust, specified in paragraph (b) of this section and established during the performance test when the raw mill was not operating, is not exceeded.

(3) If the in-line kiln/raw mill is equipped with an alkali bypass, the applicable temperature limit for the alkali bypass, specified in paragraph (b) of this section and established during the performance test when the raw mill was operating, is not exceeded.

(b) The temperature limit for affected sources meeting the limits of paragraph (a) of this section or paragraphs (a)(1) through (a)(3) of this section is determined in accordance with § 63.1349(b)(3)(iv).

(c) The owner or operator of an affected source subject to a D/F emission limitation under § 63.1343 that employs carbon injection as an emission control technique must operate the carbon injection system in accordance with paragraphs (c)(1) and (c)(2) of this section.

(1) The three-hour rolling average activated carbon injection rate shall be equal to or greater than the activated carbon injection rate determined in accordance with § 63.1349(b)(3)(vi).

(2) The owner or operator shall either:

(i) Maintain the minimum activated carbon injection carrier gas flow rate, as a three-hour rolling average, based on the manufacturer's specifications. These specifications must be documented in the test plan developed in accordance with § 63.7(c), or

(ii) Maintain the minimum activated carbon injection carrier gas pressure drop, as a three-hour rolling average, based on the manufacturer's specifications. These specifications must be documented in the test plan developed in accordance with § 63.7(c).

(d) Except as provided in paragraph (e) of this section, the owner or operator of an affected source subject to a D/F emission limitation under § 63.1343 that employs carbon injection as an emission control technique must specify and use the brand and type of activated carbon used during the performance test until a subsequent performance test is conducted, unless the site-specific performance test plan contains documentation of key parameters that

affect adsorption and the owner or operator establishes limits based on those parameters, and the limits on these parameters are maintained.

(e) The owner or operator of an affected source subject to a D/F emission limitation under § 63.1343 that employs carbon injection as an emission control technique may substitute, at any time, a different brand or type of activated carbon provided that the replacement has equivalent or improved properties compared to the activated carbon specified in the site-specific performance test plan and used in the performance test. The owner or operator must maintain documentation that the substitute activated carbon will provide the same or better level of control as the original activated carbon.

§ 63.1345 Standards for clinker coolers.

(a) No owner or operator of a new or existing clinker cooler at a facility which is a major source subject to the provisions of this subpart shall cause to be discharged into the atmosphere from the clinker cooler any gases which:

(1) Contain particulate matter in excess of 0.050 kg per Mg (0.10 lb per ton) of feed (dry basis) to the kiln.

(2) Exhibit opacity greater than ten percent.

(b) [Reserved].

§ 63.1346 Standards for new and reconstructed raw material dryers.

(a) *Brownfield/major sources.* No owner or operator of a new or reconstructed brownfield raw material dryer at a facility which is a major source subject to this subpart shall cause to be discharged into the atmosphere from the new or reconstructed raw material dryer any gases which exhibit opacity greater than ten percent.

(b) *Greenfield/area sources.* No owner or operator of a greenfield raw material dryer at a facility which is an area source subject to this subpart shall cause to be discharged into the atmosphere from the greenfield raw material dryer any gases which contain THC in excess of 50 ppmvd, reported as propane, corrected to seven percent oxygen.

(c) *Greenfield/major sources.* No owner or operator of a greenfield raw material dryer at a facility which is a major source subject to this subpart shall cause to be discharged into the atmosphere from the greenfield raw material dryer any gases which:

(1) Contain THC in excess of 50 ppmvd, reported as propane, corrected to seven percent oxygen.

(2) Exhibit opacity greater than ten percent.

§ 63.1347 Standards for raw and finish mills.

The owner or operator of each new or existing raw mill or finish mill at a facility which is a major source subject to the provisions of this subpart shall not cause to be discharged from the mill sweep or air separator air pollution control devices of these affected sources any gases which exhibit opacity in excess of ten percent.

§ 63.1348 Standards for affected sources other than kilns; in-line kiln/raw mills; clinker coolers; new and reconstructed raw material dryers; and raw and finish mills.

The owner or operator of each new or existing raw material, clinker, or finished product storage bin; conveying system transfer point; bagging system; and bulk loading or unloading system; and each existing raw material dryer, at a facility which is a major source subject to the provisions of this subpart shall not cause to be discharged any gases from these affected sources which exhibit opacity in excess of ten percent.

Monitoring and Compliance Provisions

§ 63.1349 Performance testing requirements.

(a) The owner or operator of an affected source subject to this subpart shall demonstrate initial compliance with the emission limits of § 63.1343 and §§ 63.1345 through 63.1348 using the test methods and procedures in paragraph (b) of this section and § 63.7. Performance test results shall be documented in complete test reports that contain the information required by paragraphs (a)(1) through (a)(10) of this section, as well as all other relevant information. The plan to be followed during testing shall be made available to the Administrator prior to testing, if requested.

(1) A brief description of the process and the air pollution control system;

(2) Sampling location description(s);

(3) A description of sampling and analytical procedures and any modifications to standard procedures;

(4) Test results;

(5) Quality assurance procedures and results;

(6) Records of operating conditions during the test, preparation of standards, and calibration procedures;

(7) Raw data sheets for field sampling and field and laboratory analyses;

(8) Documentation of calculations;

(9) All data recorded and used to establish parameters for compliance monitoring; and

(10) Any other information required by the test method.

(b) Performance tests to demonstrate initial compliance with this subpart shall be conducted as specified in paragraphs (b)(1) through (b)(4) of this section.

(1) The owner or operator of a kiln subject to limitations on particulate matter emissions shall demonstrate initial compliance by conducting a performance test as specified in paragraphs (b)(1)(i) through (b)(1)(iv) of this section. The owner or operator of an in-line kiln/raw mill subject to limitations on particulate matter emissions shall demonstrate initial compliance by conducting separate performance tests as specified in paragraphs (b)(1)(i) through (b)(1)(iv) of this section while the raw mill of the in-line kiln/raw mill is under normal operating conditions and while the raw mill of the in-line kiln/raw mill is not operating. The owner or operator of a clinker cooler subject to limitations on particulate matter emissions shall demonstrate initial compliance by conducting a performance test as specified in paragraphs (b)(1)(i) through (b)(1)(iii) of this section. The opacity exhibited during the period of the Method 5 of Appendix A to part 60 of this chapter performance tests required by paragraph (b)(1)(i) of this section shall be determined as required in paragraphs (b)(1)(v) through (vi) of this section.

(i) EPA Method 5 of appendix A to part 60 of this chapter shall be used to determine PM emissions. Each performance test shall consist of three separate runs under the conditions that exist when the affected source is operating at the highest load or capacity level reasonably expected to occur. Each run shall be conducted for at least one hour, and the minimum sample volume shall be 0.85 dscm (30 dscf). The average of the three runs shall be used to determine compliance. A determination of the particulate matter collected in the impingers ("back half") of the Method 5 particulate sampling train is not required to demonstrate initial compliance with the PM standards of this subpart. However this shall not preclude the permitting authority from requiring a determination of the "back half" for other purposes.

(ii) Suitable methods shall be used to determine the kiln or inline kiln/raw mill feed rate, except for fuels, for each run.

(iii) The emission rate, E, of PM shall be computed for each run using equation 1:

$$E = (C_s Q_{sd})/P \qquad \text{(Eq. 1)}$$

Where:

E = emission rate of particulate matter, kg/Mg of kiln feed.
c_s = concentration of PM, kg/dscm.
Q_{sd} = volumetric flow rate of effluent gas, dscm/hr.
P = total kiln feed (dry basis), Mg/hr.

(iv) When there is an alkali bypass associated with a kiln or in-line kiln/raw mill, the main exhaust and alkali bypass of the kiln or in-line kiln/raw mill shall be tested simultaneously and the combined emission rate of particulate matter from the kiln or in-line kiln/raw mill and alkali bypass shall be computed for each run using equation 2,

$$E_c = (C_{sk}Q_{sdk} + C_{sb}Q_{sdb})/P \qquad \text{(Eq. 2)}$$

Where:

E_c = the combined emission rate of particulate matter from the kiln or in-line kiln/raw mill and bypass stack, kg/Mg of kiln feed.
c_{sk} = concentration of particulate matter in the kiln or in-line kiln/raw mill effluent, kg/dscm.
Q_{sdk} = volumetric flow rate of kiln or in-line kiln/raw mill effluent, dscm/hr.
c_{sb} = concentration of particulate matter in the alkali bypass gas, kg/dscm.
Q_{sdb} = volumetric flow rate of alkali bypass gas, dscm/hr.
P=total kiln feed (dry basis), Mg/hr.

(v) Except as provided in paragraph (b)(1)(vi) of this section the opacity exhibited during the period of the Method 5 performance tests required by paragraph (b)(1)(i) of this section shall be determined through the use of a continuous opacity monitor (COM). The maximum six-minute average opacity during the three Method 5 test runs shall be determined during each Method 5 test run, and used to demonstrate initial compliance with the applicable opacity limits of § 63.1343(b)(2), § 63.1343(c)(2), or § 63.1345(a)(2).

(vi) Each owner or operator of a kiln, in-line kiln/raw mill, or clinker cooler subject to the provisions of this subpart using a fabric filter with multiple stacks or an electrostatic precipitator with multiple stacks may, in lieu of installing the continuous opacity monitoring system required by paragraph (b)(1)(v) of this section, conduct an opacity test in accordance with Method 9 of appendix A to part 60 of this chapter during each Method 5 performance test required by paragraph (b)(1)(i) of this section. If the control device exhausts through a monovent, or if the use of a COM in accordance with the installation specifications of Performance Specification 1 (PS–1) of appendix B to part 60 of this chapter is not feasible, a test shall be conducted in accordance with Method 9 of appendix A to part 60 of this chapter during each Method 5 performance test required by paragraph (b)(1)(i) of this section. The maximum six-minute average opacity shall be determined during the three Method 5 test runs, and used to demonstrate initial compliance with the applicable opacity limits of § 63.1343(b)(2), § 63.1343(c)(2), or § 63.1345(a)(2).

(2) The owner or operator of any affected source subject to limitations on opacity under this subpart that is not subject to paragraph (b)(1) of this section shall demonstrate initial compliance with the affected source opacity limit by conducting a test in accordance with Method 9 of appendix A to part 60 of this chapter. The performance test shall be conducted under the conditions that exist when the affected source is operating at the highest load or capacity level reasonably expected to occur. The maximum six-minute average opacity exhibited during the test period shall be used to determine whether the affected source is in initial compliance with the standard. The duration of the Method 9 performance test shall be 3-hours (30 6-minute averages), except that the duration of the Method 9 performance test may be reduced to 1-hour if the conditions of paragraphs (b)(2)(i) through (ii) of the section apply:

(i) There are no individual readings greater than 10 percent opacity;

(ii) There are no more than three readings of 10 percent for the first 1-hour period.

(3) The owner or operator of an affected source subject to limitations on D/F emissions shall demonstrate initial compliance with the D/F emission limit by conducting a performance test using Method 23 of appendix A to part 60 of this chapter. The owner or operator of an in-line kiln/raw mill shall demonstrate initial compliance by conducting separate performance tests while the raw mill of the in-line kiln/raw mill is under normal operating conditions and while the raw mill of the in-line kiln/raw mill is not operating. The owner or operator of a kiln or in-line kiln/raw mill equipped with an alkali bypass shall conduct simultaneous performance tests of the kiln or in-line kiln/raw mill exhaust and the alkali bypass, however the owner or operator of an in-line kiln/raw mill is not required to conduct a performance test of the alkali bypass exhaust when the raw mill of the in-line kiln/raw mill is not operating.

(i) Each performance test shall consist of three separate runs; each run shall be conducted under the conditions that exist when the affected source is operating at the highest load or capacity level reasonably expected to occur. The duration of each run shall be at least three hours and the sample volume for each run shall be at least 2.5 dscm (90 dscf). The concentration shall be determined for each run and the arithmetic average of the concentrations measured for the three runs shall be calculated and used to determine compliance.

(ii) The temperature at the inlet to the kiln or in-line kiln/raw mill PMCD, and where applicable, the temperature at the inlet to the alkali bypass PMCD, must be continuously recorded during the period of the Method 23 test, and the continuous temperature record(s) must be included in the performance test report.

(iii) One-minute average temperatures must be calculated for each minute of each run of the test.

(iv) The run average temperature must be calculated for each run, and the average of the run average temperatures must be determined and included in the performance test report and will determine the applicable temperature limit in accordance with § 63.1344(b).

(v) If activated carbon injection is used for D/F control, the rate of activated carbon injection to the kiln or in-line kiln/raw mill exhaust, and where applicable, the rate of activated carbon injection to the alkali bypass exhaust, must be continuously recorded during the period of the Method 23 test, and the continuous injection rate record(s) must be included in the performance test report. In addition, the performance test report must include the brand and type of activated carbon used during the performance test and a continuous record of either the carrier gas flow rate or the carrier gas pressure drop for the duration of the test. Activated carbon injection rate parameters must be determined in accordance with paragraphs (b)(3)(vi) of this section.

(vi) The run average injection rate must be calculated for each run, and the average of the run average injection rates must be determined and included in the performance test report and will determine the applicable injection rate limit in accordance with § 63.1344(c)(1).

(4) The owner or operator of an affected source subject to limitations on emissions of THC shall demonstrate initial compliance with the THC limit by operating a continuous emission monitor in accordance with Performance Specification 8A of appendix B to part 60 of this chapter. The duration of the performance test shall be three hours, and the average THC concentration (as calculated from the one-minute averages) during the three hour performance test shall be

calculated. The owner or operator of an in-line kiln/raw mill shall demonstrate initial compliance by conducting separate performance tests while the raw mill of the in-line kiln/raw mill is under normal operating conditions and while the raw mill of the in-line kiln/raw mill is not operating.

(c) Except as provided in paragraph (e) of this section, performance tests required under paragraphs (b)(1) and (b)(2) of this section shall be repeated every five years, except that the owner or operator of a kiln, in-line kiln/raw mill or clinker cooler is not required to repeat the initial performance test of opacity for the kiln, in-line kiln/raw mill or clinker cooler.

(d) Performance tests required under paragraph (b)(3) of this section shall be repeated every 30 months.

(e) The owner or operator is required to repeat the performance tests for kilns or in-line kiln/raw mills as specified in paragraphs (b)(1) and (b)(3) of this section within 90 days of initiating any significant change in the feed or fuel from that used in the previous performance test.

(f) Table 1 of this section provides a summary of the performance test requirements of this subpart.

TABLE 1 TO § 63.1349.—SUMMARY OF PERFORMANCE TEST REQUIREMENTS

Affected source and pollutant	Performance test
New and existing kiln and in-line kiln/raw mill[b,c] PM	EPA Method 5.[a]
New and existing kiln and in-line kiln/raw mill[b,c] Opacity	COM if feasible[d,e] or EPA Method 9 visual opacity readings.
New and existing kiln and in-line kiln/raw mill[b,c,f,g] D/F	EPA Method 23[h].
New greenfield kiln and in-line kiln/raw mill[c] THC	THC CEM (EPA PS–8A)[i].
New and existing clinker cooler PM	EPA Method 5[a].
New and existing clinker cooler opacity	COM[d,j] or EPA Method 9 visual opacity readings.
New and existing raw and finish mill opacity	EPA Method 9.[a,j]
New and existing raw material dryer and materials handling processes (raw material storage, clinker storage, finished product storage, conveyor transfer points, bagging, and bulk loading and unloading systems) opacity.	EPA Method 9.[a,j]
New greenfield raw material dryer THC	THC CEM (EPA PS–8A).[i]

[a] Required initially and every 5 years thereafter.
[b] Includes main exhaust and alkali bypass.
[c] In-line kiln/raw mill to be tested with and without raw mill in operation.
[d] Must meet COM performance specification criteria. If the fabric filter or electrostatic precipitator has multiple stacks, daily EPA Method 9 visual opacity readings may be taken instead of using a COM.
[e] Opacity limit is 20 percent.
[f] Alkali bypass is tested with the raw mill on.
[g] Temperature and (if applicable) activated carbon injection parameters determined separately with and without the raw mill operating.
[h] Required initially and every 30 months thereafter.
[i] EPA Performance Specification (PS)–8A of appendix B to 40 CFR part 60.
[j] Opacity limit is 10 percent.

§ 63.1350 Monitoring requirements.

(a) The owner or operator of each portland cement plant shall prepare for each affected source subject to the provisions of this subpart, a written operations and maintenance plan. The plan shall be submitted to the Administrator for review and approval as part of the application for a part 70 permit and shall include the following information:

(1) Procedures for proper operation and maintenance of the affected source and air pollution control devices in order to meet the emission limits and operating limits of §§ 63.1343 through 63.1348;

(2) Corrective actions to be taken when required by paragraph (e) of this section;

(3) Procedures to be used during an inspection of the components of the combustion system of each kiln and each in-line kiln raw mill located at the facility at least once per year; and

(4) Procedures to be used to periodically monitor affected sources subject to opacity standards under §§ 63.1346 and 63.1348. Such procedures must include the provisions of paragraphs (a)(4)(i) through (a)(4)(iv) of this section.

(i) The owner or operator must conduct a monthly 1-minute visible emissions test of each affected source in accordance with Method 22 of Appendix A to part 60 of this chapter. The test must be conducted while the affected source is in operation.

(ii) If no visible emissions are observed in six consecutive monthly tests for any affected source, the owner or operator may decrease the frequency of testing from monthly to semi-annually for that affected source. If visible emissions are observed during any semi-annual test, the owner or operator must resume testing of that affected source on a monthly basis and maintain that schedule until no visible emissions are observed in six consecutive monthly tests.

(iii) If no visible emissions are observed during the semi-annual test for any affected source, the owner or operator may decrease the frequency of testing from semi-annually to annually for that affected source. If visible emissions are observed during any annual test, the owner or operator must resume testing of that affected source on a monthly basis and maintain that schedule until no visible emissions are observed in six consecutive monthly tests.

(iv) If visible emissions are observed during any Method 22 test, the owner or operator must conduct a 6-minute test of opacity in accordance with Method 9 of appendix A to part 60 of this chapter. The Method 9 test must begin within one hour of any observation of visible emissions.

(b) Failure to comply with any provision of the operations and maintenance plan developed in accordance with paragraph (a) of this section shall be a violation of the standard.

(c) The owner or operator of a kiln or in-line kiln/raw mill shall monitor opacity at each point where emissions are vented from these affected sources including alkali bypasses in accordance with paragraphs (c)(1) through (c)(3) of this section.

(1) Except as provided in paragraph (c)(2) of this section, the owner or operator shall install, calibrate, maintain, and continuously operate a

continuous opacity monitor (COM) located at the outlet of the PM control device to continuously monitor the opacity. The COM shall be installed, maintained, calibrated, and operated as required by subpart A, general provisions of this part, and according to PS-1 of appendix B to part 60 of this chapter.

(2) The owner or operator of a kiln or in-line kiln/raw mill subject to the provisions of this subpart using a fabric filter with multiple stacks or an electrostatic precipitator with multiple stacks may, in lieu of installing the continuous opacity monitoring system required by paragraph (c)(1) of this section, monitor opacity in accordance with paragraphs (c)(2)(i) through (ii) of this section. If the control device exhausts through a monovent, or if the use of a COM in accordance with the installation specifications of PS-1 of appendix B to part 60 of this chapter is not feasible, the owner or operator must monitor opacity in accordance with paragraphs (c)(2)(i) through (ii) of this section.

(i) Perform daily visual opacity observations of each stack in accordance with the procedures of Method 9 of appendix A of part 60 of this chapter. The Method 9 test shall be conducted while the affected source is operating at the highest load or capacity level reasonably expected to occur within the day. The duration of the Method 9 test shall be at least 30 minutes each day.

(ii) Use the Method 9 procedures to monitor and record the average opacity for each six-minute period during the test.

(3) To remain in compliance, the opacity must be maintained such that the 6-minute average opacity for any 6-minute block period does not exceed 20 percent. If the average opacity for any 6-minute block period exceeds 20 percent, this shall constitute a violation of the standard.

(d) The owner or operator of a clinker cooler shall monitor opacity at each point where emissions are vented from the clinker cooler in accordance with paragraphs (d)(1) through (d)(3) of this section.

(1) Except as provided in paragraph (d)(2) of this section, the owner or operator shall install, calibrate, maintain, and continuously operate a COM located at the outlet of the clinker cooler PM control device to continuously monitor the opacity. The COM shall be installed, maintained, calibrated, and operated as required by subpart A, general provisions of this part, and according to PS-1 of appendix B to part 60 of this chapter.

(2) The owner or operator of a clinker cooler subject to the provisions of this subpart using a fabric filter with multiple stacks or an electrostatic precipitator with multiple stacks may, in lieu of installing the continuous opacity monitoring system required by paragraph (d)(1) of this section, monitor opacity in accordance with paragraphs (d)(2)(i) through (ii) of this section. If the control device exhausts through a monovent, or if the use of a COM in accordance with the installation specifications of PS-1 of appendix B to part 60 of this chapter is not feasible, the owner or operator must monitor opacity in accordance with paragraphs (d)(2)(i) through (ii) of this section.

(i) Perform daily visual opacity observations of each stack in accordance with the procedures of Method 9 of appendix A of part 60 of this chapter. The Method 9 test shall be conducted while the affected source is operating at the highest load or capacity level reasonably expected to occur within the day. The duration of the Method 9 test shall be at least 30 minutes each day.

(ii) Use the Method 9 procedures to monitor and record the average opacity for each six-minute period during the test.

(3) To remain in compliance, the opacity must be maintained such that the 6-minute average opacity for any 6-minute block period does not exceed 10 percent. If the average opacity for any 6-minute block period exceeds 10 percent, this shall constitute a violation of the standard.

(e) The owner or operator of a raw mill or finish mill shall monitor opacity by conducting daily visual emissions observations of the mill sweep and air separator PMCDs of these affected sources, in accordance with the procedures of Method 22 of appendix A of part 60 of this chapter. The Method 22 test shall be conducted while the affected source is operating at the highest load or capacity level reasonably expected to occur within the day. The duration of the Method 22 test shall be six minutes. If visible emissions are observed during any Method 22 visible emissions test, the owner or operator must:

(1) Initiate, within one-hour, the corrective actions specified in the site specific operating and maintenance plan developed in accordance with paragraphs (a)(1) and (a)(2) of this section; and

(2) Within 24 hours of the end of the Method 22 test in which visible emissions were observed, conduct a visual opacity test of each stack from which visible emissions were observed in accordance with Method 9 of appendix A of part 60 of this chapter. The duration of the Method 9 test shall be thirty minutes.

(f) The owner or operator of an affected source subject to a limitation on D/F emissions shall monitor D/F emissions in accordance with paragraphs (f)(1) through (f)(6) of this section.

(1) The owner or operator shall install, calibrate, maintain, and continuously operate a continuous monitor to record the temperature of the exhaust gases from the kiln, in-line kiln/raw mill and alkali bypass, if applicable, at the inlet to, or upstream of, the kiln, in-line kiln/raw mill and/or alkali bypass PM control devices.

(i) The recorder response range must include zero and 1.5 times either of the average temperatures established according to the requirements in § 63.1349(b)(3)(iv).

(ii) The reference method must be a National Institute of Standards and Technology calibrated reference thermocouple-potentiometer system or alternate reference, subject to approval by the Administrator.

(2) The owner or operator shall monitor and continuously record the temperature of the exhaust gases from the kiln, in-line kiln/raw mill and alkali bypass, if applicable, at the inlet to the kiln, in-line kiln/raw mill and/or alkali bypass PMCD.

(3) The three-hour rolling average temperature shall be calculated as the average of 180 successive one-minute average temperatures.

(4) Periods of time when one-minute averages are not available shall be ignored when calculating three-hour rolling averages. When one-minute averages become available, the first one-minute average is added to the previous 179 values to calculate the three-hour rolling average.

(5) When the operating status of the raw mill of the in-line kiln/raw mill is changed from off to on, or from on to off the calculation of the three-hour rolling average temperature must begin anew, without considering previous recordings.

(6) The calibration of all thermocouples and other temperature sensors shall be verified at least once every three months.

(g) The owner or operator of an affected source subject to a limitation on D/F emissions that employs carbon injection as an emission control technique shall comply with the monitoring requirements of paragraphs (f)(1) through (f)(6) and (g)(1) through (g)(6) of this section to demonstrate continuous compliance with the D/F emission standard.

(1) Install, operate, calibrate and maintain a continuous monitor to record the rate of activated carbon injection. The accuracy of the rate measurement device must be ±1 percent of the rate being measured.

(2) Verify the calibration of the device at least once every three months.

(3) The three-hour rolling average activated carbon injection rate shall be calculated as the average of 180 successive one-minute average activated carbon injection rates.

(4) Periods of time when one-minute averages are not available shall be ignored when calculating three-hour rolling averages. When one-minute averages become available, the first one-minute average is added to the previous 179 values to calculate the three-hour rolling average.

(5) When the operating status of the raw mill of the in-line kiln/raw mill is changed from off to on, or from on to off the calculation of the three-hour rolling average activated carbon injection rate must begin anew, without considering previous recordings.

(6) The owner or operator must install, operate, calibrate and maintain a continuous monitor to record the activated carbon injection system carrier gas parameter (either the carrier gas flow rate or the carrier gas pressure drop) established during the D/F performance test in accordance with paragraphs (g)(6)(i) through (g)(6)(iii) of this section.

(i) The owner or operator shall install, calibrate, operate and maintain a device to continuously monitor and record the parameter value.

(ii) The owner or operator must calculate and record three-hour rolling averages of the parameter value.

(iii) Periods of time when one-minute averages are not available shall be ignored when calculating three-hour rolling averages. When one-minute averages become available, the first one-minute average shall be added to the previous 179 values to calculate the three-hour rolling average.

(h) The owner or operator of an affected source subject to a limitation on THC emissions under this subpart shall comply with the monitoring requirements of paragraphs (h)(1) through (h)(3) of this section to demonstrate continuous compliance with the THC emission standard:

(1) The owner or operator shall install, operate and maintain a THC continuous emission monitoring system in accordance with Performance Specification 8A, of appendix B to part 60 of this chapter and comply with all of the requirements for continuous monitoring systems found in the general provisions, subpart A of this part.

(2) The owner or operator is not required to calculate hourly rolling averages in accordance with section 4.9 of Performance Specification 8A.

(3) Any thirty-day block average THC concentration in any gas discharged from a greenfield raw material dryer, the main exhaust of a greenfield kiln, or the main exhaust of a greenfield in-line kiln/raw mill, exceeding 50 ppmvd, reported as propane, corrected to seven percent oxygen, is a violation of the standard.

(i) The owner or operator of any kiln or in-line kiln/raw mill subject to a D/F emission limit under this subpart shall conduct an inspection of the components of the combustion system of each kiln or in-line kiln raw mill at least once per year.

(j) The owner or operator of an affected source subject to a limitation on opacity under § 63.1346 or § 63.1348 shall monitor opacity in accordance with the operation and maintenance plan developed in accordance with paragraph (a) of this section.

(k) The owner or operator of an affected source subject to a particulate matter standard under § 63.1343 shall install, calibrate, maintain and operate a particulate matter continuous emission monitoring system (PM CEMS) to measure the particulate matter discharged to the atmosphere. The compliance deadline for installing the PM CEMS and all requirements relating to performance of the PM CEMS and implementation of the PM CEMS requirement is deferred pending further rulemaking.

(l) An owner or operator may submit an application to the Administrator for approval of alternate monitoring requirements to demonstrate compliance with the emission standards of this subpart, except for emission standards for THC, subject to the provisions of paragraphs (l)(1) through (l)(6) of this section.

(1) The Administrator will not approve averaging periods other than those specified in this section, unless the owner or operator documents, using data or information, that the longer averaging period will ensure that emissions do not exceed levels achieved during the performance test over any increment of time equivalent to the time required to conduct three runs of the performance test.

(2) If the application to use an alternate monitoring requirement is approved, the owner or operator must continue to use the original monitoring requirement until approval is received to use another monitoring requirement.

(3) The owner or operator shall submit the application for approval of alternate monitoring requirements no later than the notification of performance test. The application must contain the information specified in paragraphs (l)(3)(i) through (l)(3)(iii) of this section:

(i) Data or information justifying the request, such as the technical or economic infeasibility, or the impracticality of using the required approach;

(ii) A description of the proposed alternative monitoring requirement, including the operating parameter to be monitored, the monitoring approach and technique, the averaging period for the limit, and how the limit is to be calculated; and

(iii) Data or information documenting that the alternative monitoring requirement would provide equivalent or better assurance of compliance with the relevant emission standard.

(4) The Administrator will notify the owner or operator of the approval or denial of the application within 90 calendar days after receipt of the original request, or within 60 calendar days of the receipt of any supplementary information, whichever is later. The Administrator will not approve an alternate monitoring application unless it would provide equivalent or better assurance of compliance with the relevant emission standard. Before disapproving any alternate monitoring application, the Administrator will provide:

(i) Notice of the information and findings upon which the intended disapproval is based; and

(ii) Notice of opportunity for the owner or operator to present additional supporting information before final action is taken on the application. This notice will specify how much additional time is allowed for the owner or operator to provide additional supporting information.

(5) The owner or operator is responsible for submitting any supporting information in a timely manner to enable the Administrator to consider the application prior to the performance test. Neither submittal of an application, nor the Administrator's failure to approve or disapprove the application relieves the owner or operator of the responsibility to comply with any provision of this subpart.

(6) The Administrator may decide at any time, on a case-by-case basis that additional or alternative operating limits, or alternative approaches to establishing operating limits, are necessary to demonstrate compliance with the emission standards of this subpart.

(m) A summary of the monitoring requirements of this subpart is given in Table 1 to this section.

TABLE 1 TO § 63.1350.—MONITORING REQUIREMENTS

Affected source/pollutant or opacity	Monitor type/operation/process	Monitoring requirements
All affected sources	Operations and maintenance plan	Prepare written plan for all affected sources and control devices.
All kilns and in-line kiln raw mills at major sources (including alkali bypass)/opacity.	Continuous opacity monitor, if applicable	Install, calibrate, maintain and operate in accordance with general provisions and with PS–1.
	Method 9 opacity test, if applicable	Daily test of at least 30-minutes, while kiln is at highest load or capacity level.
Kilns and in-line kiln raw mills at major sources (including alkali bypass)/particulate matter.	Particulate matter continuous emission monitoring system.	Deferred.
Kilns and in-line kiln raw mills at major and area sources (including alkali bypass)/ D/F.	Combustion system inspection	Conduct annual inspection of components of combustion system.
	Continuous temperature monitoring at PMCD inlet.	Install, operate, calibrate and maintain continuous temperature monitoring and recording system; calculate three-hour rolling averages; verify temperature sensor calibration at least quarterly.
Kilns and in-line kiln raw mills at major and area sources (including alkali bypass)/ D/F (continued).	Activated carbon injection rate monitor, if applicable.	Install, operate, calibrate and maintain continuous activated carbon injection rate monitor; calculate three-hour rolling averages; verify calibration at least quarterly; install, operate, calibrate and maintain carrier gas flow rate monitor or carrier gas pressure drop monitor; calculate three-hour rolling averages; document carbon specifications.
New greenfield kilns and in-line kiln raw mills at major and area sources/THC.	Total hydrocarbon continuous emission monitor.	Install, operate, and maintain THC CEM in accordance with PS–8A; calculate 30-day block average THC concentration.
Clinker coolers at major sources/opacity	Continuous opacity monitor, if applicable	Install, calibrate, maintain and operate in accordance with general provisions and with PS–1.
	Method 9 opacity test, if applicable	Daily test of at least 30-minutes, while kiln is at highest load or capacity level.
Raw mills and finish mills at major sources/ opacity.	Method 22 visible emissions test	Conduct daily 6-minute Method 22 visible emissions test while mill is operating at highest load or capacity level; if visible emissions are observed, initiate corrective action within one hour and conduct 30-minute Method 9 test within 24 hours.
New greenfield raw material dryers at major and area sources/THC.	Total hydrocarbon continuous emission monitor.	Install, operate, and maintain THC CEM in accordance with PS–8A; calculate 30-day block average THC concentration.
Raw material dryers; raw material, clinker, finished product storage bins; conveying system transfer points; bagging systems; and bulk loading and unloading systems at major sources/opacity.	Method 22 visible emissions test	As specified in operation and maintenance plan.

§ 63.1351 Compliance dates.

(a) The compliance date for an owner or operator of an existing affected source subject to the provisions of this subpart is June 10, 2002.

(b) The compliance date for an owner or operator of an affected source subject to the provisions of this subpart that commences new construction or reconstruction after March 24, 1998 is June 9, 1999 or immediately upon startup of operations, whichever is later.

6§ 3.1352 Additional test methods.

(a) Owners or operators conducting tests to determine the rates of emission of hydrogen chloride (HCl) from kilns, in-line kiln/raw mills and associated bypass stacks at portland cement manufacturing facilities, for use in applicability determinations under § 63.1340 are permitted to use Method 320 or Method 321 of appendix A of this part.

(b) Owners or operators conducting tests to determine the rates of emission of hydrogen chloride (HCl) from kilns, in-line kiln/raw mills and associated bypass stacks at portland cement manufacturing facilities, for use in applicability determinations under § 63.1340 are permitted to use Methods 26 or 26A of appendix A to part 60 of this chapter, except that the results of these tests shall not be used to establish status as an area source.

(c) Owners or operators conducting tests to determine the rates of emission of specific organic HAP from raw material dryers, kilns and in-line kiln/ raw mills at portland cement manufacturing facilities, for use in applicability determinations under § 63.1340 of this subpart are permitted to use Method 320 of appendix A to this part, or Method 18 of appendix A to part 60 of this chapter.

Notification, Reporting and Recordkeeping

§ 63.1353 Notification requirements.

(a) The notification provisions of 40 CFR part 63, subpart A that apply and those that do not apply to owners and operators of affected sources subject to this subpart are listed in Table 1 of this subpart. If any State requires a notice that contains all of the information required in a notification listed in this section, the owner or operator may send the Administrator a copy of the notice sent to the State to satisfy the requirements of this section for that notification.

(b) Each owner or operator subject to the requirements of this subpart shall comply with the notification requirements in § 63.9 as follows:

(1) Initial notifications as required by § 63.9(b) through (d). For the purposes of this subpart, a Title V or 40 CFR part 70 permit application may be used in lieu of the initial notification required under § 63.9(b), provided the same information is contained in the permit application as required by § 63.9(b), and the State to which the permit application has been submitted has an approved operating permit program under part 70 of this chapter and has received delegation of authority from the EPA. Permit applications shall be submitted by the same due dates as those specified for the initial notification.

(2) Notification of performance tests, as required by §§ 63.7 and 63.9(e).

(3) Notification of opacity and visible emission observations required by § 63.1349 in accordance with §§ 63.6(h)(5) and 63.9(f).

(4) Notification, as required by § 63.9(g), of the date that the continuous emission monitor performance evaluation required by § 63.8(e) is scheduled to begin.

(5) Notification of compliance status, as required by § 63.9(h).

§ 63.1354 Reporting requirements.

(a) The reporting provisions of subpart A of this part that apply and those that do not apply to owners or operators of affected sources subject to this subpart are listed in Table 1 of this subpart. If any State requires a report that contains all of the information required in a report listed in this section, the owner or operator may send the Administrator a copy of the report sent to the State to satisfy the requirements of this section for that report.

(b) The owner or operator of an affected source shall comply with the reporting requirements specified in § 63.10 of the general provisions of this part 63, subpart A as follows:

(1) As required by § 63.10(d)(2), the owner or operator shall report the results of performance tests as part of the notification of compliance status.

(2) As required by § 63.10(d)(3), the owner or operator of an affected source shall report the opacity results from tests required by § 63.1349.

(3) As required by § 63.10(d)(4), the owner or operator of an affected source who is required to submit progress reports as a condition of receiving an extension of compliance under § 63.6(i) shall submit such reports by the dates specified in the written extension of compliance.

(4) As required by § 63.10(d)(5), if actions taken by an owner or operator during a startup, shutdown, or malfunction of an affected source (including actions taken to correct a malfunction) are consistent with the procedures specified in the source's startup, shutdown, and malfunction plan specified in § 63.6(e)(3), the owner or operator shall state such information in a semiannual report. Reports shall only be required if a startup, shutdown, or malfunction occurred during the reporting period. The startup, shutdown, and malfunction report may be submitted simultaneously with the excess emissions and continuous monitoring system performance reports; and

(5) Any time an action taken by an owner or operator during a startup, shutdown, or malfunction (including actions taken to correct a malfunction) is not consistent with the procedures in the startup, shutdown, and malfunction plan, the owner or operator shall make an immediate report of the actions taken for that event within 2 working days, by telephone call or facsimile (FAX) transmission. The immediate report shall be followed by a letter, certified by the owner or operator or other responsible official, explaining the circumstances of the event, the reasons for not following the startup, shutdown, and malfunction plan, and whether any excess emissions and/or parameter monitoring exceedances are believed to have occurred.

(6) As required by § 63.10(e)(2), the owner or operator shall submit a written report of the results of the performance evaluation for the continuous monitoring system required by § 63.8(e). The owner or operator shall submit the report simultaneously with the results of the performance test.

(7) As required by § 63.10(e)(2), the owner or operator of an affected source using a continuous opacity monitoring system to determine opacity compliance during any performance test required under § 63.7 and described in § 63.6(d)(6) shall report the results of the continuous opacity monitoring system performance evaluation conducted under § 63.8(e).

(8) As required by § 63.10(e)(3), the owner or operator of an affected source equipped with a continuous emission monitor shall submit an excess emissions and continuous monitoring system performance report for any event when the continuous monitoring system data indicate the source is not in compliance with the applicable emission limitation or operating parameter limit.

(9) The owner or operator shall submit a summary report semiannually which contains the information specified in § 63.10(e)(3)(vi). In addition, the summary report shall include:

(i) All exceedences of maximum control device inlet gas temperature limits specified in § 63.1344(a) and (b);

(ii) All failures to calibrate thermocouples and other temperature sensors as required under § 63.1350(f)(7) of this subpart; and

(iii) All failures to maintain the activated carbon injection rate, and the activated carbon injection carrier gas flow rate or pressure drop, as applicable, as required under § 63.1344(c).

(iv) The results of any combustion system component inspections conducted within the reporting period as required under § 63.1350(i).

(v) All failures to comply with any provision of the operation and maintenance plan developed in accordance with § 63.1350(a).

(10) If the total continuous monitoring system downtime for any CEM or any continuous monitoring system (CMS) for the reporting period is ten percent or greater of the total operating time for the reporting period, the owner or operator shall submit an excess emissions and continuous monitoring system performance report along with the summary report.

§ 63.1355 Recordkeeping requirements.

(a) The owner or operator shall maintain files of all information (including all reports and notifications) required by this section recorded in a form suitable and readily available for inspection and review as required by § 63.10(b)(1). The files shall be retained for at least five years following the date of each occurrence, measurement, maintenance, corrective action, report, or record. At a minimum, the most recent two years of data shall be retained on site. The remaining three

years of data may be retained off site. The files may be maintained on microfilm, on a computer, on floppy disks, on magnetic tape, or on microfiche.

(b) The owner or operator shall maintain records for each affected source as required by § 63.10(b)(2) and (b)(3) of this part; and

(1) All documentation supporting initial notifications and notifications of compliance status under § 63.9;

(2) All records of applicability determination, including supporting analyses; and

(3) If the owner or operator has been granted a waiver under § 63.8(f)(6), any information demonstrating whether a source is meeting the requirements for a waiver of recordkeeping or reporting requirements.

(c) In addition to the recordkeeping requirements in paragraph (b) of this section, the owner or operator of an affected source equipped with a continuous monitoring system shall maintain all records required by § 63.10(c).

Other

§ 63.1356 Exemption from new source performance standards.

(a) Except as provided in paragraphs (a)(1) and (a)(2) of this section, any affected source subject to the provisions of this subpart is exempted from any otherwise applicable new source performance standard contained in 40 CFR part 60, subpart F.

(1) Kilns and in-line kiln/raw mills, as applicable under 40 CFR 60.60(b), located at area sources are subject to PM and opacity limits and associated reporting and recordkeeping, under 40 CFR part 60, subpart F.

(2) Greenfield raw material dryers, as applicable under 40 CFR 60.60(b), located at area sources are subject to opacity limits and associated reporting and recordkeeping under 40 CFR part 60, subpart F.

§ 63.1357 Temporary, conditioned exemption from particulate matter and opacity standards.

(a) Subject to the limitations of paragraphs (b) through (f) of this section, an owner or operator conducting PM CEMS correlation tests (that is, correlation with manual stack methods) is exempt from:

(1) Any particulate matter and opacity standards of part 60 or part 63 of this chapter that are applicable to cement kilns and in-line kiln/raw mills.

(2) Any permit or other emissions or operating parameter or other limitation on workplace practices that are applicable to cement kilns and in-line kiln raw mills to ensure compliance with any particulate matter and opacity standards of this part or part 60 of this chapter.

(b) The owner or operator must develop a PM CEMS correlation test plan. The plan must be submitted to the Administrator for approval at least 90 days before the correlation test is scheduled to be conducted. The plan must include:

(1) The number of test conditions and the number of runs for each test condition;

(2) The target particulate matter emission level for each test condition;

(3) How the operation of the affected source will be modified to attain the desired particulate matter emission rate; and

(4) The anticipated normal particulate matter emission level.

(c) The Administrator will review and approve or disapprove the correlation test plan in accordance with § 63.7(c)(3)(i) and (iii). If the Administrator fails to approve or disapprove the correlation test plan within the time period specified in § 63.7(c)(3)(iii), the plan shall be considered approved, unless the Administrator has requested additional information.

(d) The stack sampling team must be on-site and prepared to perform correlation testing no later than 24 hours after operations are modified to attain the desired particulate matter emissions concentrations, unless the correlation test plan documents that a longer period is appropriate.

(e) The particulate matter and opacity standards and associated operating limits and conditions will not be waived for more than 96 hours, in the aggregate, for a correlation test, including all runs and conditions.

(f) The owner or operator must return the affected source to operating conditions indicative of compliance with the applicable particulate matter and opacity standards as soon as possible after correlation testing is completed.

§ 63.1358 Delegation of authority.

(a) In delegating implementation and enforcement authority to a State under subpart E of this part, the authorities contained in paragraph (b) of this section shall be retained by the Administrator and not transferred to a State.

(b) Authority which will not be delegated to States:

(1) Approval of alternative non-opacity emission standards under § 63.6(g).

(2) Approval of alternative opacity standards under § 63.6(h)(9).

(3) Approval of major changes to test methods under §§ 63.7(e)(2)(ii) and 63.7(f). A major change to a test method is a modification to a federally enforceable test method that uses unproven technology or procedures or is an entirely new method (sometimes necessary when the required test method is unsuitable).

(4) Approval of major changes to monitoring under § 63.8(f). A major change to monitoring is a modification to federally enforceable monitoring that uses unproven technology or procedures, is an entirely new method (sometimes necessary when the required monitoring is unsuitable), or is a change in the averaging period.

(5) Waiver of recordkeeping under § 63.10(f).

§ 63.1359 [Reserved]

TABLE 1 TO SUBPART LLL.—APPLICABILITY OF GENERAL PROVISIONS

General Provisions 40 CFR Citation	Requirement	Applies to Subpart LLL	Comment
63.1(a)(1) through (4)	Applicability	Yes.	
63.1(a)(5)		No	[Reserved].
63.1(a)(6) through (a)(8)	Applicability	Yes.	
63.1(a)(9)		No	[Reserved].
63.1(a)(10) through (14)	Applicability	Yes.	
63.1(b)(1)	Initial Applicability Determination	No	§ 63.1340 specifies applicability.
63.1(b)(2) and (3)	Initial Applicability Determination	Yes.	
63.1(c)(1)	Applicability After Standard Established	Yes.	
63.1(c)(2)	Permit Requirements	Yes	Area sources must obtain Title V permits.

TABLE 1 TO SUBPART LLL.—APPLICABILITY OF GENERAL PROVISIONS—Continued

General Provisions 40 CFR Citation	Requirement	Applies to Subpart LLL	Comment
63.1(c)(3)		No	[Reserved].
63.1(c)(4) and (5)	Extensions, Notifications	Yes.	
63.1(d)		No	[Reserved].
63.1(e)	Applicability of Permit Program	Yes.	
63.2	Definitions	Yes.	Additional definitions in § 63.1341.
63.3(a) through (c)	Units and Abbreviations	Yes.	
63.4(a)(1) through (a)(3)	Prohibited Activities	Yes.	
63.4(a)(4)		No	[Reserved].
63.4(a)(5)	Compliance date	Yes.	
63.4(b) and (c)	Circumvention, Severability	Yes.	
63.5(a)(1) and (2)	Construction/Reconstruction	Yes.	
63.5(b)(1)	Compliance Dates	Yes.	
63.5(b)(2)		No	[Reserved].
63.5(b)(3) through (6)	Construction Approval, Applicability	Yes.	
63.5(c)		No	[Reserved].
63.5(d)(1) through (4)	Approval of Construction/Reconstruction	Yes.	
63.5(e)	Approval of Construction/Reconstruction	Yes.	
63.5(f)(1) and (2)	Approval of Construction/Reconstruction	Yes.	
63.6(a)	Compliance for Standards and Maintenance.	Yes.	
63.6(b)(1) through (5)	Compliance Dates	Yes.	
63.6(b)(6)		No	[Reserved].
63.6(b)(7)	Compliance Dates	Yes.	
63.6(c)(1) and (2)	Compliance Dates	Yes.	
63.6(c)(3) and (c)(4)		No	[Reserved].
63.6(c)(5)	Compliance Dates	Yes.	
63.6(d)		No	[Reserved].
63.6(e)(1) and (e)(2)	Operation & Maintenance	Yes.	
63.6(e)(3)	Startup, Shutdown Malfunction Plan	Yes.	
63.6(f)(1) through (3)	Compliance with Emission Standards	Yes.	
63.6(g)(1) through (g)(3)	Alternative Standard	Yes.	
63.6(h)(1) and (2)	Opacity/VE Standards	Yes.	
63.6(h)(3)		No	Reserved
63.6(h)(4) and (h)(5)(i)	Opacity/VE Standards	Yes.	
63.6(h)(5)(ii) through (iv)	Opacity/VE Standards	No	Test duration specified in Subpart LLL.
63.6(h)(6)	Opacity/VE Standards	Yes.	
63.6(i)(1) through (i)(14)	Extension of Compliance	Yes.	
63.6(i)(15)		No	[Reserved].
63.6(i)(16)	Extension of Compliance	Yes.	
63.6(j)	Exemption from Compliance	Yes.	
63.7(a)(1) through (a)(3)	Performance Testing Requirements	Yes	§ 63.1349 has specific requirements.
63.7(b)	Notification	Yes.	
63.7(c)	Quality Assurance/Test Plan	Yes.	
63.7(d)	Testing Facilities	Yes.	
63.7(e)(1) through (4)	Conduct of Tests	Yes.	
63.7(f)	Alternative Test Method	Yes.	
63.7(g)	Data Analysis	Yes.	
63.7(h)	Waiver of Tests	Yes.	
63.8(a)(1)	Monitoring Requirements	Yes.	
63.8(a)(2)	Monitoring	No	§ 63.1350 includes CEM requirements.
63.8(a)(3)		No	[Reserved].
63.8(a)(4)	Monitoring	No	Flares not applicable.
63.8(b)(1) through (3)	Conduct of Monitoring	Yes.	
63.8(c)(1) through (8)	CMS Operation/ Maintenance	Yes.	Performance specification supersedes requirements for THC CEM. Temperature and activated carbon injection monitoring data reduction requirements given in subpart LLL.
63.8(d)	Quality Control	Yes.	
63.8(e)	Performance Evaluation for CMS	Yes	Performance specification supersedes requirements for THC CEM.
63.8(f)(1) through (f)(5)	Alternative Monitoring Method	Yes	Additional requirements in § 1350(l).
63.8(f)(6)	Alternative to RATA Test	Yes.	
63.8(g)	Data Reduction	Yes.	
63.9(a)	Notification Requirements	Yes.	
63.9(b)(1) through (5)	Initial Notifications	Yes.	
63.9(c)	Request for Compliance Extension	Yes.	
63.9(d)	New Source Notification for Special Compliance Requirements.	Yes.	
63.9(e)	Notification of Performance Test	Yes.	
63.9(f)	Notification of VE/Opacity Test	Yes	Notification not required for VE/ opacity test under § 63.1350(e) and (j).

TABLE 1 TO SUBPART LLL.—APPLICABILITY OF GENERAL PROVISIONS—Continued

General Provisions 40 CFR Citation	Requirement	Applies to Subpart LLL	Comment
63.9(g)	Additional CMS Notifications	Yes.	
63.9(h)(1) through (h)(3)	Notification of Compliance Status	Yes.	
63.9(h)(4)		No	[Reserved].
63.9(h)(5) and (h)(6)	Notification of Compliance Status	Yes.	
63.9(i)	Adjustment of Deadlines	Yes.	
63.9(j)	Change in Previous Information	Yes.	
63.10(a)	Recordkeeping/Reporting	Yes	Yes.
63.10(b)	General Requirements	Yes.	
63.10(c)(1)	Additional CMS Recordkeeping	Yes	PS–8A applies.
63.10(c)(2) through (c)(4)		No	Reserved]
63.10(c)(5) through (c)(8)	Additional CMS Recordkeeping	Yes	PS–8A applies instead of requirements for THC CEM.
63.10(c)(9)		No	[Reserved]
63.10(c)(10) through (15)	Additional CMS Recordkeeping	Yes	PS–8A applies instead of requirements for THC CEM.
63.10(d)(1)	General Reporting Requirements	Yes.	
63.10(d)(2)	Performance Test Results	Yes.	
63.10(d)(3)	Opacity or VE Observations	Yes.	
63.10(d)(4)	Progress Reports	Yes.	
63.10(d)(5)	Startup, Shutdown, Malfunction Reports	Yes.	
63.10(e)(1) and (e)(2)	Additional CMS Reports	Yes.	
63.10(e)(3)	Excess Emissions and CMS Performance Reports.	Yes	Exceedences are defined in subpart LLL.
63.10(f)	Waiver for Recordkeeping/ Reporting	Yes.	
63.11(a) and (b)	Control Device Requirements	No	Flares not applicable.
63.12(a)–(c	)State Authority and Delegations	Yes.	
63.13(a)–(c)	State/Regional Addresses	Yes.	
63.14(a) and (b)	Incorporation by Reference	Yes.	
63.15(a) and (b)	Availability of Information	Yes.	

3. Appendix A of part 63 is amended by adding, in numerical order, Methods 320 and 321 to read as follows:

Appendix A to Part 63—Test Methods

* * * * *

Test Method 320—Measurement of Vapor Phase Organic and Inorganic Emissions by Extractive Fourier Transform Infrared (FTIR) Spectroscopy

1.0 *Introduction.*

Persons unfamiliar with basic elements of FTIR spectroscopy should not attempt to use this method. This method describes sampling and analytical procedures for extractive emission measurements using Fourier transform infrared (FTIR) spectroscopy. Detailed analytical procedures for interpreting infrared spectra are described in the "Protocol for the Use of Extractive Fourier Transform Infrared (FTIR) Spectrometry in Analyses of Gaseous Emissions from Stationary Sources," hereafter referred to as the "Protocol." Definitions not given in this method are given in appendix A of the Protocol. References to specific sections in the Protocol are made throughout this Method. For additional information refer to references 1 and 2, and other EPA reports, which describe the use of FTIR spectrometry in specific field measurement applications and validation tests. The sampling procedure described here is extractive. Flue gas is extracted through a heated gas transport and handling system. For some sources, sample conditioning systems may be applicable. Some examples are given in this method.

Note: sample conditioning systems may be used providing the method validation requirements in Sections 9.2 and 13.0 of this method are met.

1.1 *Scope and Applicability.*

1.1.1 *Analytes.* Analytes include hazardous air pollutants (HAPs) for which EPA reference spectra have been developed. Other compounds can also be measured with this method if reference spectra are prepared according to section 4.6 of the protocol.

1.1.2 *Applicability.* This method applies to the analysis of vapor phase organic or inorganic compounds which absorb energy in the mid-infrared spectral region, about 400 to 4000 cm^{-1} (25 to 2.5 μm). This method is used to determine compound-specific concentrations in a multi-component vapor phase sample, which is contained in a closed-path gas cell. Spectra of samples are collected using double beam infrared absorption spectroscopy. A computer program is used to analyze spectra and report compound concentrations.

1.2 *Method Range and Sensitivity.* Analytical range and sensitivity depend on the frequency-dependent analyte absorptivity, instrument configuration, data collection parameters, and gas stream composition. Instrument factors include: (a) spectral resolution, (b) interferometer signal averaging time, (c) detector sensitivity and response, and (d) absorption path length.

1.2.1 For any optical configuration the analytical range is between the absorbance values of about .01 (infrared transmittance relative to the background = 0.98) and 1.0 (T = 0.1). (For absorbance > 1.0 the relation between absorbance and concentration may not be linear.)

1.2.2 The concentrations associated with this absorbance range depend primarily on the cell path length and the sample temperature. An analyte absorbance greater than 1.0, can be lowered by decreasing the optical path length. Analyte absorbance increases with a longer path length. Analyte detection also depends on the presence of other species exhibiting absorbance in the same analytical region. Additionally, the estimated lower absorbance (A) limit (A = 0.01) depends on the root mean square deviation (RMSD) noise in the analytical region.

1.2.3 The concentration range of this method is determined by the choice of optical configuration.

1.2.3.1 The absorbance for a given concentration can be decreased by decreasing the path length or by diluting the sample. There is no practical upper limit to the measurement range.

1.2.3.2 The analyte absorbance for a given concentration may be increased by increasing the cell path length or (to some extent) using a higher resolution. Both modifications also cause a corresponding increased absorbance for all compounds in the sample, and a decrease in the signal throughput. For this reason the practical lower detection range (quantitation limit) usually depends on sample characteristics such as moisture content of the gas, the presence of other interferants, and losses in the sampling system.

1.3 *Sensitivity.* The limit of sensitivity for an optical configuration and integration time is determined using appendix D of the Protocol: Minimum Analyte Uncertainty, (MAU). The MAU depends on the RMSD noise in an analytical region, and on the absorptivity of the analyte in the same region.

1.4 *Data Quality.* Data quality shall be determined by executing Protocol pre-test procedures in appendices B to H of the protocol and post-test procedures in appendices I and J of the protocol.

1.4.1 Measurement objectives shall be established by the choice of detection limit (DL_i) and analytical uncertainty (AU_i) for each analyte.

1.4.2 An instrumental configuration shall be selected. An estimate of gas composition shall be made based on previous test data, data from a similar source or information gathered in a pre-test site survey. Spectral interferants shall be identified using the selected DL_i and AU_i and band areas from reference spectra and interferant spectra. The baseline noise of the system shall be measured in each analytical region to determine the MAU of the instrument configuration for each analyte and interferant (MIU_i).

1.4.3 Data quality for the application shall be determined, in part, by measuring the RMS (root mean square) noise level in each analytical spectral region (appendix C of the Protocol). The RMS noise is defined as the RMSD of the absorbance values in an analytical region from the mean absorbance value in the region.

1.4.4 The MAU is the minimum analyte concentration for which the AU_i can be maintained; if the measured analyte concentration is less than MAU_i, then data quality are unacceptable.

2.0 *Summary of Method*

2.1 *Principle.* References 4 through 7 provide background material on infrared spectroscopy and quantitative analysis. A summary is given in this section.

2.1.1 Infrared absorption spectroscopy is performed by directing an infrared beam through a sample to a detector. The frequency-dependent infrared absorbance of the sample is measured by comparing this detector signal (single beam spectrum) to a signal obtained without a sample in the beam path (background).

2.1.2 Most molecules absorb infrared radiation and the absorbance occurs in a characteristic and reproducible pattern. The infrared spectrum measures fundamental molecular properties and a compound can be identified from its infrared spectrum alone.

2.1.3 Within constraints, there is a linear relationship between infrared absorption and compound concentration. If this frequency dependent relationship (absorptivity) is known (measured), it can be used to determine compound concentration in a sample mixture.

2.1.4 Absorptivity is measured by preparing, in the laboratory, standard samples of compounds at known concentrations and measuring the FTIR "reference spectra" of these standard samples. These "reference spectra" are then used in sample analysis: (1) Compounds are detected by matching sample absorbance bands with bands in reference spectra, and (2) concentrations are measured by comparing sample band intensities with reference band intensities.

2.1.5 This method is self-validating provided that the results meet the performance requirement of the QA spike in sections 8.6.2 and 9.0 of this method, and results from a previous method validation study support the use of this method in the application.

2.2 *Sampling and Analysis.* In extractive sampling a probe assembly and pump are used to extract gas from the exhaust of the affected source and transport the sample to the FTIR gas cell. Typically, the sampling apparatus is similar to that used for single-component continuous emission monitor (CEM) measurements.

2.2.1 The digitized infrared spectrum of the sample in the FTIR gas cell is measured and stored on a computer. Absorbance band intensities in the spectrum are related to sample concentrations by what is commonly referred to as Beer's Law.

$$A_i = a_i b c_i \qquad (1)$$

Where:

A_i = absorbance at a given frequency of the ith sample component.

a_i = absorption coefficient (absorptivity) of the ith sample component.

b = path length of the cell.

c_i = concentration of the ith sample component.

2.2.2 Analyte spiking is used for quality assurance (QA). In this procedure (section 8.6.2 of this method) an analyte is spiked into the gas stream at the back end of the sample probe. Analyte concentrations in the spiked samples are compared to analyte concentrations in unspiked samples. Since the concentration of the spike is known, this procedure can be used to determine if the sampling system is removing the spiked analyte(s) from the sample stream.

2.3 *Reference Spectra Availability.* Reference spectra of over 100 HAPs are available in the EPA FTIR spectral library on the EMTIC (Emission Measurement Technical Information Center) computer bulletin board service and at internet address http://info.arnold.af.mil/epa/welcome.htm. Reference spectra for HAPs, or other analytes, may also be prepared according to section 4.6 of the Protocol.

2.4 *Operator Requirements.* The FTIR analyst shall be trained in setting up the instrumentation, verifying the instrument is functioning properly, and performing routine maintenance. The analyst must evaluate the initial sample spectra to determine if the sample matrix is consistent with pre-test assumptions and if the instrument configuration is suitable. The analyst must be able to modify the instrument configuration, if necessary.

2.4.1 The spectral analysis shall be supervised by someone familiar with EPA FTIR Protocol procedures.

2.4.2 A technician trained in instrumental test methods is qualified to install and operate the sampling system. This includes installing the probe and heated line assembly, operating the analyte spike system, and performing moisture and flow measurements.

3.0 *Definitions*

See appendix A of the Protocol for definitions relating to infrared spectroscopy. Additional definitions are given in sections 3.1 through 3.29.

3.1 *Analyte.* A compound that this method is used to measure. The term "target analyte" is also used. This method is multi-component and a number of analytes can be targeted for a test.

3.2 *Reference Spectrum.* Infrared spectrum of an analyte prepared under controlled, documented, and reproducible laboratory conditions according to procedures in section 4.6 of the Protocol. A library of reference spectra is used to measure analytes in gas samples.

3.3 *Standard Spectrum.* A spectrum that has been prepared from a reference spectrum through a (documented) mathematical operation. A common example is de-resolving of reference spectra to lower-resolution standard spectra (Protocol, appendix K to the addendum of this method). Standard spectra, prepared by approved, and documented, procedures can be used as reference spectra for analysis.

3.4 *Concentration.* In this method concentration is expressed as a molar concentration, in ppm-meters, or in (ppm-meters)/K, where K is the absolute temperature (Kelvin). The latter units allow the direct comparison of concentrations from systems using different optical configurations or sampling temperatures.

3.5 *Interferant.* A compound in the sample matrix whose infrared spectrum overlaps with part of an analyte spectrum. The most accurate analyte measurements are achieved when reference spectra of interferants are used in the quantitative analysis with the analyte reference spectra. The presence of an interferant can increase the analytical uncertainty in the measured analyte concentration.

3.6 *Gas Cell.* A gas containment cell that can be evacuated. It is equipped with the optical components to pass the infrared beam through the sample to the detector. Important cell features include: path length (or range if variable), temperature range, materials of construction, and total gas volume.

3.7 *Sampling System.* Equipment used to extract the sample from the test location and transport the sample gas to the FTIR analyzer. This includes sample conditioning systems.

3.8 *Sample Analysis.* The process of interpreting the infrared spectra to obtain sample analyte concentrations. This process is usually automated using a software routine employing a classical least squares (cls), partial least squares (pls), or K- or P-matrix method.

3.9 *One hundred percent line.* A double beam transmittance spectrum obtained by combining two background single beam spectra. Ideally, this line is equal to 100 percent transmittance (or zero absorbance) at every frequency in the spectrum. Practically, a zero absorbance line is used to measure the baseline noise in the spectrum.

3.10 *Background Deviation.* A deviation from 100 percent transmittance in any region

of the 100 percent line. Deviations greater than ±5 percent in an analytical region are unacceptable (absorbance of 0.021 to −0.022). Such deviations indicate a change in the instrument throughput relative to the background single beam.

3.11 *Batch Sampling.* A procedure where spectra of discreet, static samples are collected. The gas cell is filled with sample and the cell is isolated. The spectrum is collected. Finally, the cell is evacuated to prepare for the next sample.

3.12 *Continuous Sampling.* A procedure where spectra are collected while sample gas is flowing through the cell at a measured rate.

3.13 *Sampling resolution.* The spectral resolution used to collect sample spectra.

3.14 *Truncation.* Limiting the number of interferogram data points by deleting points farthest from the center burst (zero path difference, ZPD).

3.15 *Zero filling.* The addition of points to the interferogram. The position of each added point is interpolated from neighboring real data points. Zero filling adds no information to the interferogram, but affects line shapes in the absorbance spectrum (and possibly analytical results).

3.16 *Reference CTS.* Calibration Transfer Standard spectra that were collected with reference spectra.

3.17 *CTS Standard.* CTS spectrum produced by applying a de-resolution procedure to a reference CTS.

3.18 *Test CTS.* CTS spectra collected at the sampling resolution using the same optical configuration as for sample spectra. Test spectra help verify the resolution, temperature and path length of the FTIR system.

3.19 *RMSD.* Root Mean Square Difference, defined in EPA FTIR Protocol, appendix A.

3.20 *Sensitivity.* The noise-limited compound-dependent detection limit for the FTIR system configuration. This is estimated by the MAU. It depends on the RMSD in an analytical region of a zero absorbance line.

3.21 *Quantitation Limit.* The lower limit of detection for the FTIR system configuration in the sample spectra. This is estimated by mathematically subtracting scaled reference spectra of analytes and interferences from sample spectra, then measuring the RMSD in an analytical region of the subtracted spectrum. Since the noise in subtracted sample spectra may be much greater than in a zero absorbance spectrum, the quantitation limit is generally much higher than the sensitivity. Removing spectral interferences from the sample or improving the spectral subtraction can lower the quantitation limit toward (but not below) the sensitivity.

3.22 *Independent Sample.* A unique volume of sample gas; there is no mixing of gas between two consecutive independent samples. In continuous sampling two independent samples are separated by at least 5 cell volumes. The interval between independent measurements depends on the cell volume and the sample flow rate (through the cell).

3.23 *Measurement.* A single spectrum of flue gas contained in the FTIR cell.

3.24 *Run.* A run consists of a series of measurements. At a minimum a run includes 8 independent measurements spaced over 1 hour.

3.25 *Validation.* Validation of FTIR measurements is described in sections 13.0 through 13.4 of this method. Validation is used to verify the test procedures for measuring specific analytes at a source. Validation provides proof that the method works under certain test conditions.

3.26 *Validation Run.* A validation run consists of at least 24 measurements of independent samples. Half of the samples are spiked and half are not spiked. The length of the run is determined by the interval between independent samples.

3.27 *Screening.* Screening is used when there is little or no available information about a source. The purpose of screening is to determine what analytes are emitted and to obtain information about important sample characteristics such as moisture, temperature, and interferences. Screening results are semi-quantitative (estimated concentrations) or qualitative (identification only). Various optical and sampling configurations may be used. Sample conditioning systems may be evaluated for their effectiveness in removing interferences. It is unnecessary to perform a complete run under any set of sampling conditions. Spiking is not necessary, but spiking can be a useful screening tool for evaluating the sampling system, especially if a reactive or soluble analyte is used for the spike.

3.28 *Emissions Test.* An FTIR emissions test is performed according specific sampling and analytical procedures. These procedures, for the target analytes and the source, are based on previous screening and validation results. Emission results are quantitative. A QA spike (sections 8.6.2 and 9.2 of this method) is performed under each set of sampling conditions using a representative analyte. Flow, gas temperature and diluent data are recorded concurrently with the FTIR measurements to provide mass emission rates for detected compounds.

3.29 *Surrogate.* A surrogate is a compound that is used in a QA spike procedure (section 8.6.2 of this method) to represent other compounds. The chemical and physical properties of a surrogate shall be similar to the compounds it is chosen to represent. Under given sampling conditions, usually a single sampling factor is of primary concern for measuring the target analytes: for example, the surrogate spike results can be representative for analytes that are more reactive, more soluble, have a lower absorptivity, or have a lower vapor pressure than the surrogate itself.

4.0 *Interferences*

Interferences are divided into two classifications: analytical and sampling.

4.1 *Analytical Interferences.* An analytical interference is a spectral feature that complicates (in extreme cases may prevent) the analysis of an analyte. Analytical interferences are classified as background or spectral interference.

4.1.1 *Background Interference.* This results from a change in throughput relative to the single beam background. It is corrected by collecting a new background and proceeding with the test. In severe instances the cause must be identified and corrected. Potential causes include: (1) Deposits on reflective surfaces or transmitting windows, (2) changes in detector sensitivity, (3) a change in the infrared source output, or (4) failure in the instrument electronics. In routine sampling throughput may degrade over several hours. Periodically a new background must be collected, but no other corrective action will be required.

4.1.2 *Spectral Interference.* This results from the presence of interfering compound(s) (interferant) in the sample. Interferant spectral features overlap analyte spectral features. Any compound with an infrared spectrum, including analytes, can potentially be an interferant. The Protocol measures absorbance band overlap in each analytical region to determine if potential interferants shall be classified as known interferants (FTIR Protocol, section 4.9 and appendix B). Water vapor and CO_2 are common spectral interferants. Both of these compounds have strong infrared spectra and are present in many sample matrices at high concentrations relative to analytes. The extent of interference depends on the (1) interferant concentration, (2) analyte concentration, and (3) the degree of band overlap. Choosing an alternate analytical region can minimize or avoid the spectral interference. For example, CO_2 interferes with the analysis of the 670 cm^{-1} benzene band. However, benzene can also be measured near 3000 cm^{-1} (with less sensitivity).

4.2 *Sampling System Interferences.* These prevent analytes from reaching the instrument. The analyte spike procedure is designed to measure sampling system interference, if any.

4.2.1 *Temperature.* A temperature that is too low causes condensation of analytes or water vapor. The materials of the sampling system and the FTIR gas cell usually set the upper limit of temperature.

4.2.2 *Reactive Species.* Anything that reacts with analytes. Some analytes, like formaldehyde, polymerize at lower temperatures.

4.2.3 *Materials.* Poor choice of material for probe, or sampling line may remove some analytes. For example, HF reacts with glass components.

4.2.4 *Moisture.* In addition to being a spectral interferant, condensed moisture removes soluble compounds.

5.0 *Safety*

The hazards of performing this method are those associated with any stack sampling method and the same precautions shall be followed. Many HAPs are suspected carcinogens or present other serious health risks. Exposure to these compounds should be avoided in all circumstances. For instructions on the safe handling of any particular compound, refer to its material safety data sheet. When using analyte standards, always ensure that gases are properly vented and that the gas handling system is leak free. (Always perform a leak check with the system under maximum vacuum and, again, with the system at greater than ambient pressure.) Refer to section 8.2 of this method for leak check procedures. This method does not address all of the potential safety risks associated with its use. Anyone performing this method must follow

safety and health practices consistent with applicable legal requirements and with prudent practice for each application.

6.0 *Equipment and Supplies*

Note: Mention of trade names or specific products does not constitute endorsement by the Environmental Protection Agency.

The equipment and supplies are based on the schematic of a sampling system shown in Figure 1. Either the batch or continuous sampling procedures may be used with this sampling system. Alternative sampling configurations may also be used, provided that the data quality objectives are met as determined in the post-analysis evaluation. Other equipment or supplies may be necessary, depending on the design of the sampling system or the specific target analytes.

6.1 *Sampling Probe.* Glass, stainless steel, or other appropriate material of sufficient length and physical integrity to sustain heating, prevent adsorption of analytes, and to transport analytes to the infrared gas cell. Special materials or configurations may be required in some applications. For instance, high stack sample temperatures may require special steel or cooling the probe. For very high moisture sources it may be desirable to use a dilution probe.

6.2 *Particulate Filters.* A glass wool plug (optional) inserted at the probe tip (for large particulate removal) and a filter (required) rated for 99 percent removal efficiency at 1-micron (e.g., Balston™) connected at the outlet of the heated probe.

6.3 *Sampling Line/Heating System.* Heated (sufficient to prevent condensation) stainless steel, polytetrafluoroethane, or other material inert to the analytes.

6.4 *Gas Distribution Manifold.* A heated manifold allowing the operator to control flows of gas standards and samples directly to the FTIR system or through sample conditioning systems. Usually includes heated flow meter, heated valve for selecting and sending sample to the analyzer, and a by-pass vent. This is typically constructed of stainless steel tubing and fittings, and high-temperature valves.

6.5 *Stainless Steel Tubing.* Type 316, appropriate diameter (e.g., 3/8 in.) and length for heated connections. Higher grade stainless may be desirable in some applications.

6.6 *Calibration/Analyte Spike Assembly.* A three way valve assembly (or equivalent) to introduce analyte or surrogate spikes into the sampling system at the outlet of the probe upstream of the out-of-stack particulate filter and the FTIR analytical system.

6.7 *Mass Flow Meter (MFM).* These are used for measuring analyte spike flow. The MFM shall be calibrated in the range of 0 to 5 L/min and be accurate to ± 2 percent (or better) of the flow meter span.

6.8 *Gas Regulators.* Appropriate for individual gas standards.

6.9 *Polytetrafluoroethane Tubing.* Diameter (e.g., 3/8 in.) and length suitable to connect cylinder regulators to gas standard manifold.

6.10 *Sample Pump.* A leak-free pump (e.g., KNF™), with by-pass valve, capable of producing a sample flow rate of at least 10 L/min through 100 ft of sample line. If the pump is positioned upstream of the distribution manifold and FTIR system, use a heated pump that is constructed from materials non-reactive to the analytes. If the pump is located downstream of the FTIR system, the gas cell sample pressure will be lower than ambient pressure and it must be recorded at regular intervals.

6.11 *Gas Sample Manifold.* Secondary manifold to control sample flow at the inlet to the FTIR manifold. This is optional, but includes a by-pass vent and heated rotameter.

6.12 *Rotameter.* A 0 to 20 L/min rotameter. This meter need not be calibrated.

6.13 *FTIR Analytical System.* Spectrometer and detector, capable of measuring the analytes to the chosen detection limit. The system shall include a personal computer with compatible software allowing automated collection of spectra.

6.14 *FTIR Cell Pump.* Required for the batch sampling technique, capable of evacuating the FTIR cell volume within 2 minutes. The pumping speed shall allow the operator to obtain 8 sample spectra in 1 hour.

6.15 *Absolute Pressure Gauge.* Capable of measuring pressure from 0 to 1000 mmHg to within ± 2.5 mmHg (e.g., Baratron™).

6.16 *Temperature Gauge.* Capable of measuring the cell temperature to within ± 2°C.

6.17 *Sample Conditioning.* One option is a condenser system, which is used for moisture removal. This can be helpful in the measurement of some analytes. Other sample conditioning procedures may be devised for the removal of moisture or other interfering species.

6.17.1 The analyte spike procedure of section 9.2 of this method, the QA spike procedure of section 8.6.2 of this method, and the validation procedure of section 13 of this method demonstrate whether the sample conditioning affects analyte concentrations. Alternatively, measurements can be made with two parallel FTIR systems: one measuring conditioned sample, the other measuring unconditioned sample.

6.17.2 Another option is sample dilution. The dilution factor measurement must be documented and accounted for in the reported concentrations. An alternative to dilution is to lower the sensitivity of the FTIR system by decreasing the cell path length, or to use a short-path cell in conjunction with a long path cell to measure more than one concentration range.

7.0 *Reagents and Standards*

7.1 *Analyte(s) and Tracer Gas.* Obtain a certified gas cylinder mixture containing all of the analyte(s) at concentrations within ± 2 percent of the emission source levels (expressed in ppm-meter/K). If practical, the analyte standard cylinder shall also contain the tracer gas at a concentration which gives a measurable absorbance at a dilution factor of at least 10:1. Two ppm SF_6 is sufficient for a path length of 22 meters at 250 °F.

7.2 *Calibration Transfer Standard(s).* Select the calibration transfer standards (CTS) according to section 4.5 of the FTIR Protocol. Obtain a National Institute of Standards and Technology (NIST) traceable gravimetric standard of the CTS (± 2 percent).

7.3 *Reference Spectra.* Obtain reference spectra for each analyte, interferant, surrogate, CTS, and tracer. If EPA reference spectra are not available, use reference spectra prepared according to procedures in section 4.6 of the EPA FTIR Protocol.

8.0 *Sampling and Analysis Procedure*

Three types of testing can be performed: (1) Screening, (2) emissions test, and (3) validation. Each is defined in section 3 of this method. Determine the purpose(s) of the FTIR test. Test requirements include: (a) AU_i, DL_i, overall fractional uncertainty, OFU_i, maximum expected concentration ($CMAX_i$) and t_{AN} for each, (b) potential interferants, (c) sampling system factors, e.g., minimum absolute cell pressure, (P_{min}), FTIR cell volume (V_{SS}), estimated sample absorption pathlength, L_S', estimated sample pressure, P_S', T_S', signal integration time (t_{SS}), minimum instrumental linewidth, MIL, fractional error, and (d) analytical regions, e.g., m = 1 to M, lower wavenumber position, FL_m, center wavenumber position, FC_m, and upper wavenumber position, FU_m, plus interferants, upper wavenumber position of the CTS absorption band, FFU_m, lower wavenumber position of the CTS absorption band, FFL_m, wavenumber range FNU to FNL. If necessary, sample and acquire an initial spectrum. From analysis of this preliminary spectrum determine a suitable operational path length. Set up the sampling train as shown in Figure 1 or use an appropriate alternative configuration. Sections 8.1 through 8.11 of this method provide guidance on pre-test calculations in the EPA protocol, sampling and analytical procedures, and post-test protocol calculations.

8.1 *Pretest Preparations and Evaluations.* Using the procedure in section 4.0 of the FTIR Protocol, determine the optimum sampling system configuration for measuring the target analytes. Use available information to make reasonable assumptions about moisture content and other interferences.

8.1.1 *Analytes.* Select the required detection limit (DL_i) and the maximum permissible analytical uncertainty (AU_i) for each analyte (labeled from 1 to i). Estimate, if possible, the maximum expected concentration for each analyte, $CMAX_i$. The expected measurement range is fixed by DL_i and $CMAX_i$ for each analyte (i).

8.1.2 *Potential Interferants.* List the potential interferants. This usually includes water vapor and CO_2, but may also include some analytes and other compounds.

8.1.3. *Optical Configuration.* Choose an optical configuration that can measure all of the analytes within the absorbance range of .01 to 1.0 (this may require more than one path length). Use Protocol sections 4.3 to 4.8 for guidance in choosing a configuration and measuring CTS.

8.1.4 *Fractional Reproducibility Uncertainty (FRU_i).* The FRU is determined for each analyte by comparing CTS spectra taken before and after the reference spectra were measured. The EPA para-xylene reference spectra were collected on 10/31/91 and 11/01/91 with corresponding CTS spectra "cts1031a," and

"cts1101b." The CTS spectra are used to estimate the reproducibility (FRU) in the system that was used to collect the references. The FRU must be < AU. Appendix E of the protocol is used to calculate the FRU from CTS spectra. Figure 2 plots results for 0.25 cm^{-1} CTS spectra in EPA reference library: S_1 (cts1101b − cts1031a), and S_4 [(cts1101b−cts1031a)/2]. The RMSD (SRMS) is calculated in the subtracted baseline, S_3, in the corresponding CTS region from 850 to 1065 cm^{-1}. The area (BAV) is calculated in the same region of the averaged CTS spectrum, S_4.

8.1.5 *Known Interferants.* Use appendix B of the EPA FTIR Protocol.

8.1.6 Calculate the Minimum Analyte Uncertainty, MAU (section 1.3 of this method discusses MAU and protocol appendix D gives the MAU procedure). The MAU for each analyte, i, and each analytical region, m, depends on the RMS noise.

8.1.7 *Analytical Program.* See FTIR Protocol, section 4.10. Prepare computer program based on the chosen analytical technique. Use as input reference spectra of all target analytes and expected interferants. Reference spectra of additional compounds shall also be included in the program if their presence (even if transient) in the samples is considered possible. The program output shall be in ppm (or ppb) and shall be corrected for differences between the reference path length, L_R, temperature, T_R, and pressure, P_R, and the conditions used for collecting the sample spectra. If sampling is performed at ambient pressure, then any pressure correction is usually small relative to corrections for path length and temperature, and may be neglected.

8.2 *Leak-Check*

8.2.1 *Sampling System.* A typical FTIR extractive sampling train is shown in Figure 1. Leak check from the probe tip to pump outlet as follows: Connect a 0-to 250-mL/min rate meter (rotameter or bubble meter) to the outlet of the pump. Close off the inlet to the probe, and record the leak rate. The leak rate shall be ≤200 mL/min.

8.2.2 *Analytical System Leak check.* Leak check the FTIR cell under vacuum and under pressure (greater than ambient). Leak check connecting tubing and inlet manifold under pressure.

8.2.2.1 For the evacuated sample technique, close the valve to the FTIR cell, and evacuate the absorption cell to the minimum absolute pressure P_{min}. Close the valve to the pump, and determine the change in pressure ΔP_v after 2 minutes.

8.2.2.2 For both the evacuated sample and purging techniques, pressurize the system to about 100 mmHg above atmospheric pressure. Isolate the pump and determine the change in pressure ΔP_p after 2 minutes.

8.2.2.3 Measure the barometric pressure, P_b in mmHg.

8.2.2.4 Determine the percent leak volume $\%V_L$ for the signal integration time t_{SS} and for ΔP_{max}, i.e., the larger of ΔP_v or ΔP_p, as follows:

$$\%V_L = 50 t_{SS} \frac{\Delta P_{max}}{P_{SS}} \qquad (2)$$

where 50 = 100% divided by the leak-check time of 2 minutes. 8.2.2.5 Leak volumes in excess of 4 percent of the FTIR system volume V_{SS} are unacceptable.

8.3 *Detector Linearity.* Once an optical configuration is chosen, use one of the procedures of sections 8.3.1 through 8.3.3 to verify that the detector response is linear. If the detector response is not linear, decrease the aperture, or attenuate the infrared beam. After a change in the instrument configuration perform a linearity check until it is demonstrated that the detector response is linear.

8.3.1 Vary the power incident on the detector by modifying the aperture setting. Measure the background and CTS at three instrument aperture settings: (1) at the aperture setting to be used in the testing, (2) at one half this aperture and (3) at twice the proposed testing aperture. Compare the three CTS spectra. CTS band areas shall agree to within the uncertainty of the cylinder standard and the RMSD noise in the system. If test aperture is the maximum aperture, collect CTS spectrum at maximum aperture, then close the aperture to reduce the IR throughput by half. Collect a second background and CTS at the smaller aperture setting and compare the spectra again.

8.3.2 Use neutral density filters to attenuate the infrared beam. Set up the FTIR system as it will be used in the test measurements. Collect a CTS spectrum. Use a neutral density filter to attenuate the infrared beam (either immediately after the source or the interferometer) to approximately ½ its original intensity. Collect a second CTS spectrum. Use another filter to attenuate the infrared beam to approximately ¼ its original intensity. Collect a third background and CTS spectrum. Compare the CTS spectra. CTS band areas shall agree to within the uncertainty of the cylinder standard and the RMSD noise in the system.

8.3.3 Observe the single beam instrument response in a frequency region where the detector response is known to be zero. Verify that the detector response is "flat" and equal to zero in these regions.

8.4 *Data Storage Requirements.* All field test spectra shall be stored on a computer disk and a second backup copy must stored on a separate disk. The stored information includes sample interferograms, processed absorbance spectra, background interferograms, CTS sample interferograms and CTS absorbance spectra. Additionally, documentation of all sample conditions, instrument settings, and test records must be recorded on hard copy or on computer medium. Table 1 gives a sample presentation of documentation.

8.5 *Background Spectrum.* Evacuate the gas cell to ≤5 mmHg, and fill with dry nitrogen gas to ambient pressure (or purge the cell with 10 volumes of dry nitrogen). Verify that no significant amounts of absorbing species (for example water vapor and CO_2) are present. Collect a background spectrum, using a signal averaging period equal to or greater than the averaging period for the sample spectra. Assign a unique file name to the background spectrum. Store two copies of the background interferogram and processed single-beam spectrum on separate computer disks (one copy is the back-up).

8.5.1 *Interference Spectra.* If possible, collect spectra of known and suspected major interferences using the same optical system that will be used in the field measurements. This can be done on-site or earlier. A number of gases, e.g. CO_2, SO_2, CO, NH_3, are readily available from cylinder gas suppliers.

8.5.2 Water vapor spectra can be prepared by the following procedure. Fill a sample tube with distilled water. Evacuate above the sample and remove dissolved gasses by alternately freezing and thawing the water while evacuating. Allow water vapor into the FTIR cell, then dilute to atmospheric pressure with nitrogen or dry air. If quantitative water spectra are required, follow the reference spectrum procedure for neat samples (protocol, section 4.6). Often, interference spectra need not be quantitative, but for best results the absorbance must be comparable to the interference absorbance in the sample spectra.

8.6 *Pre-Test Calibrations.*

8.6.1 *Calibration Transfer Standard.* Evacuate the gas cell to ≤5 mmHg absolute pressure, and fill the FTIR cell to atmospheric pressure with the CTS gas. Alternatively, purge the cell with 10 cell volumes of CTS gas. (If purge is used, verify that the CTS concentration in the cell is stable by collecting two spectra 2 minutes apart as the CTS gas continues to flow. If the absorbance in the second spectrum is no greater than in the first, within the uncertainty of the gas standard, then this can be used as the CTS spectrum.) Record the spectrum.

8.6.2 *QA Spike.* This procedure assumes that the method has been validated for at least some of the target analytes at the source. For emissions testing perform a QA spike. Use a certified standard, if possible, of an analyte, which has been validated at the source. One analyte standard can serve as a QA surrogate for other analytes which are less reactive or less soluble than the standard. Perform the spike procedure of section 9.2 of this method. Record spectra of at least three independent (section 3.22 of this method) spiked samples. Calculate the spiked component of the analyte concentration. If the average spiked concentration is within 0.7 to 1.3 times the expected concentration, then proceed with the testing. If applicable, apply the correction factor from the Method 301 of this appendix validation test (not the result from the QA spike).

8.7 *Sampling.* If analyte concentrations vary rapidly with time, continuous sampling is preferable using the smallest cell volume, fastest sampling rate and fastest spectra collection rate possible. Continuous sampling requires the least operator intervention even without an automated sampling system. For continuous monitoring at one location over long periods, Continuous sampling is preferred. Batch sampling and continuous static sampling are used for screening and performing test runs of finite duration. Either technique is preferred for sampling several

locations in a matter of days. Batch sampling gives reasonably good time resolution and ensures that each spectrum measures a discreet (and unique) sample volume. Continuous static (and continuous) sampling provide a very stable background over long periods. Like batch sampling, continuous static sampling also ensures that each spectrum measures a unique sample volume. It is essential that the leak check procedure under vacuum (section 8.2 of this method) is passed if the batch sampling procedure is used. It is essential that the leak check procedure under positive pressure is passed if the continuous static or continuous sampling procedures are used. The sampling techniques are described in sections 8.7.1 through 8.7.2 of this method.

8.7.1 *Batch Sampling.* Evacuate the absorbance cell to ≤5 mmHg absolute pressure. Fill the cell with exhaust gas to ambient pressure, isolate the cell, and record the spectrum. Before taking the next sample, evacuate the cell until no spectral evidence of sample absorption remains. Repeat this procedure to collect eight spectra of separate samples in 1 hour.

8.7.2 *Continuous Static Sampling.* Purge the FTIR cell with 10 cell volumes of sample gas. Isolate the cell, collect the spectrum of the static sample and record the pressure. Before measuring the next sample, purge the cell with 10 more cell volumes of sample gas.

8.8 *Sampling QA and Reporting*

8.8.1 Sample integration times shall be sufficient to achieve the required signal-to-noise ratio. Obtain an absorbance spectrum by filling the cell with N2. Measure the RMSD in each analytical region in this absorbance spectrum. Verify that the number of scans used is sufficient to achieve the target MAU.

8.8.2 Assign a unique file name to each spectrum.

8.8.3 Store two copies of sample interferograms and processed spectra on separate computer disks.

8.8.4 For each sample spectrum, document the sampling conditions, the sampling time (while the cell was being filled), the time the spectrum was recorded, the instrumental conditions (path length, temperature, pressure, resolution, signal integration time), and the spectral file name. Keep a hard copy of these data sheets.

8.9 *Signal Transmittance.* While sampling, monitor the signal transmittance. If signal transmittance (relative to the background) changes by 5 percent or more (absorbance = -.02 to .02) in any analytical spectral region, obtain a new background spectrum.

8.10 *Post-test CTS.* After the sampling run, record another CTS spectrum.

8.11 *Post-test QA*

8.11.1 Inspect the sample spectra immediately after the run to verify that the gas matrix composition was close to the expected (assumed) gas matrix.

8.11.2 Verify that the sampling and instrumental parameters were appropriate for the conditions encountered. For example, if the moisture is much greater than anticipated, it may be necessary to use a shorter path length or dilute the sample.

8.11.3 Compare the pre- and post-test CTS spectra. The peak absorbance in pre- and post-test CTS must be ±5 περψεντ οφ τηε μεαν ωαλθε. Σεε αππενδιχ Ε οφ τηε ΦΤΙΡ Προτοψολ.

9.0 *Quality Control.*

Use analyte spiking (sections 8.6.2, 9.2 and 13.0 of this method) to verify that the sampling system can transport the analytes from the probe to the FTIR system.

9.1 *Spike Materials.* Use a certified standard (accurate to ±2 percent) of the target analyte, if one can be obtained. If a certified standard cannot be obtained, follow the procedures in section 4.6.2.2 of the FTIR Protocol.

9.2 *Spiking Procedure.* QA spiking (section 8.6.2 of this method) is a calibration procedure used before testing. QA spiking involves following the spike procedure of sections 9.2.1 through 9.2.3 of this method to obtain at least three spiked samples. The analyte concentrations in the spiked samples shall be compared to the expected spike concentration to verify that the sampling/analytical system is working properly. Usually, when QA spiking is used, the method has already been validated at a similar source for the analyte in question. The QA spike demonstrates that the validated sampling/analytical conditions are being duplicated. If the QA spike fails then the sampling/analytical system shall be repaired before testing proceeds. The method validation procedure (section 13.0 of this method) involves a more extensive use of the analyte spike procedure of sections 9.2.1 through 9.2.3 of this method. Spectra of at least 12 independent spiked and 12 independent unspiked samples are recorded. The concentration results are analyzed statistically to determine if there is a systematic bias in the method for measuring a particular analyte. If there is a systematic bias, within the limits allowed by Method 301 of this appendix, then a correction factor shall be applied to the analytical results. If the systematic bias is greater than the allowed limits, this method is not valid and cannot be used.

9.2.1 Introduce the spike/tracer gas at a constant flow rate of ≤10 percent of the total sample flow, when possible.

Note: Use the rotameter at the end of the sampling train to estimate the required spike/tracer gas flow rate.

Use a flow device, e.g., mass flow meter (± 2 percent), to monitor the spike flow rate. Record the spike flow rate every 10 minutes.

9.2.2 Determine the response time (RT) of the system by continuously collecting spectra of the spiked effluent until the spectrum of the spiked component is constant for 5 minutes. The RT is the interval from the first measurement until the spike becomes constant. Wait for twice the duration of the RT, then collect spectra of two independent spiked gas samples. Duplicate analyses of the spiked concentration shall be within 5 percent of the mean of the two measurements.

9.2.3 Calculate the dilution ratio using the tracer gas as follows: where:

$$DF = \frac{SF_{6(spk)}}{SF_{6(dir)}} \qquad (3)$$

Where:

$$CS = DF*Spike_{dir} + Unspike\ (1 - DF) \qquad (4)$$

DF=Dilution factor of the spike gas; this value shall be ≥10.

$SF_{6(dir)}$=SF_6 (or tracer gas) concentration measured directly in undiluted spike gas.

$SF_{6(spk)}$=Diluted SF_6 (or tracer gas) concentration measured in a spiked sample.

$Spike^{dir}$=Concentration of the analyte in the spike standard measured by filling the FTIR cell directly.

CS=Expected concentration of the spiked samples.

Unspike=Native concentration of analytes in unspiked samples.

10.0 Calibration and Standardization

10.1 *Signal-to-Noise Ratio (S/N).* The RMSD in the noise must be less than one tenth of the minimum analyte peak absorbance in each analytical region. For example if the minimum peak absorbance is 0.01 at the required DL, then RMSD measured over the entire analytical region must be ≤0.001.

10.2 *Absorbance Path length.* Verify the absorbance path length by comparing reference CTS spectra to test CTS spectra. See appendix E of the FTIR Protocol.

10.3 *Instrument Resolution.* Measure the line width of appropriate test CTS band(s) to verify instrument resolution. Alternatively, compare CTS spectra to a reference CTS spectrum, if available, measured at the nominal resolution.

10.4 *Apodization Function.* In transforming the sample interferograms to absorbance spectra use the same apodization function that was used in transforming the reference spectra.

10.5 *FTIR Cell Volume.* Evacuate the cell to ≤5 mmHg. Measure the initial absolute temperature (T_i) and absolute pressure (P_i). Connect a wet test meter (or a calibrated dry gas meter), and slowly draw room air into the cell. Measure the meter volume (V_m), meter absolute temperature (T_m), and meter absolute pressure (P_m); and the cell final absolute temperature (T_f) and absolute pressure (P_f). Calculate the FTIR cell volume VSS, including that of the connecting tubing, as follows:

$$V_{SS} = \frac{V_m \frac{P_m}{T_m}}{\left[\frac{P_f}{T_f} - \frac{P_i}{T_i}\right]} \qquad (5)$$

11.0 Data Analysis and Calculations

Analyte concentrations shall be measured using reference spectra from the EPA FTIR spectral library. When EPA library spectra are not available, the procedures in section 4.6 of the Protocol shall be followed to prepare reference spectra of all the target analytes.

11.1 *Spectral De-resolution.* Reference spectra can be converted to lower resolution standard spectra (section 3.3 of this method) by truncating the original reference sample and background interferograms. Appendix K of the FTIR Protocol gives specific deresolution procedures. Deresolved spectra shall be transformed using the same apodization function and level of zero filling as the sample spectra. Additionally, pre-test FTIR protocol calculations (e.g., FRU, MAU, FCU) shall be performed using the de-resolved standard spectra.

11.2 *Data Analysis.* Various analytical programs are available for relating sample absorbance to a concentration standard. Calculated concentrations shall be verified by analyzing residual baselines after mathematically subtracting scaled reference spectra from the sample spectra. A full description of the data analysis and calculations is contained in the FTIR Protocol (sections 4.0, 5.0, 6.0 and appendices). Correct the calculated concentrations in the sample spectra for differences in absorption path length and temperature between the reference and sample spectra using equation 6.

$$C_{corr} = \left(\frac{L_r}{L_s}\right)\left(\frac{T_s}{T_r}\right)\left(\frac{P_r}{P_s}\right)C_{calc} \qquad (6)$$

Where:

C_{corr}=Concentration, corrected for path length.

C_{calc}=Concentration, initial calculation (output of the analytical program designed for the compound).

L_r=Reference spectra path length.

L_s=Sample spectra path length.

T_s=Absolute temperature of the sample gas, K.

T_r=Absolute gas temperature of reference spectra, K.

P_s=Sample cell pressure.

P_r=Reference spectrum sample pressure.

12.0 *Method Performance*

12.1 *Spectral Quality.* Refer to the FTIR Protocol appendices for analytical requirements, evaluation of data quality, and analysis of uncertainty.

12.2 *Sampling QA/QC.* The analyte spike procedure of section 9 of this method, the QA spike of section 8.6.2 of this method, and the validation procedure of section 13 of this method are used to evaluate the performance of the sampling system and to quantify sampling system effects, if any, on the measured concentrations. This method is self-validating provided that the results meet the performance requirement of the QA spike in sections 9.0 and 8.6.2 of this method and results from a previous method validation study support the use of this method in the application. Several factors can contribute to uncertainty in the measurement of spiked samples. Factors which can be controlled to provide better accuracy in the spiking procedure are listed in sections 12.2.1 through 12.2.4 of this method.

12.2.1 *Flow meter.* An accurate mass flow meter is accurate to ±1 percent of its span. If a flow of 1 L/min is monitored with such a MFM, which is calibrated in the range of 0–5 L/min, the flow measurement has an uncertainty of 5 percent. This may be improved by re-calibrating the meter at the specific flow rate to be used.

12.2.2 *Calibration gas.* Usually the calibration standard is certified to within ± 2 percent. With reactive analytes, such as HCl, the certified accuracy in a commercially available standard may be no better than ± 5 percent.

12.2.3 *Temperature.* Temperature measurements of the cell shall be quite accurate. If practical, it is preferable to measure sample temperature directly, by inserting a thermocouple into the cell chamber instead of monitoring the cell outer wall temperature.

12.2.4 *Pressure.* Accuracy depends on the accuracy of the barometer, but fluctuations in pressure throughout a day may be as much as 2.5 percent due to weather variations.

13.0 *Method Validation Procedure*

This validation procedure, which is based on EPA Method 301 (40 CFR part 63, appendix (A), may be used to validate this method for the analytes in a gas matrix. Validation at one source may also apply to another type of source, if it can be shown that the exhaust gas characteristics are similar at both sources.

13.1 Section 5.3 of Method 301 (40 CFR part 63, appendix A), the Analyte Spike procedure, is used with these modifications. The statistical analysis of the results follows section 6.3 of EPA Method 301. Section 3 of this method defines terms that are not defined in Method 301.

13.1.1 The analyte spike is performed dynamically. This means the spike flow is continuous and constant as spiked samples are measured.

13.1.2 The spike gas is introduced at the back of the sample probe.

13.1.3 Spiked effluent is carried through all sampling components downstream of the probe.

13.1.4 A single FTIR system (or more) may be used to collect and analyze spectra (not quadruplicate integrated sampling trains).

13.1.5 All of the validation measurements are performed sequentially in a single "run" (section 3.26 of this method).

13.1.6 The measurements analyzed statistically are each independent (section 3.22 of this method).

13.1.7 A validation data set can consist of more than 12 spiked and 12 unspiked measurements.

13.2 *Batch Sampling.* The procedure in sections 13.2.1 through 13.2.2 may be used for stable processes. If process emissions are highly variable, the procedure in section 13.2.3 shall be used.

13.2.1 With a single FTIR instrument and sampling system, begin by collecting spectra of two unspiked samples. Introduce the spike flow into the sampling system and allow 10 cell volumes to purge the sampling system and FTIR cell. Collect spectra of two spiked samples. Turn off the spike and allow 10 cell volumes of unspiked sample to purge the FTIR cell. Repeat this procedure until the 24 (or more) samples are collected.

13.2.2 In batch sampling, collect spectra of 24 distinct samples. (Each distinct sample consists of filling the cell to ambient pressure after the cell has been evacuated.)

13.2.3 Alternatively, a separate probe assembly, line, and sample pump can be used for spiked sample. Verify and document that sampling conditions are the same in both the spiked and the unspiked sampling systems. This can be done by wrapping both sample lines in the same heated bundle. Keep the same flow rate in both sample lines. Measure samples in sequence in pairs. After two spiked samples are measured, evacuate the FTIR cell, and turn the manifold valve so that spiked sample flows to the FTIR cell. Allow the connecting line from the manifold to the FTIR cell to purge thoroughly (the time depends on the line length and flow rate). Collect a pair of spiked samples. Repeat the procedure until at least 24 measurements are completed.

13.3 Simultaneous Measurements With Two FTIR Systems. If unspiked effluent concentrations of the target analyte(s) vary significantly with time, it may be desirable to perform synchronized measurements of spiked and unspiked sample. Use two FTIR systems, each with its own cell and sampling system to perform simultaneous spiked and unspiked measurements. The optical configurations shall be similar, if possible. The sampling configurations shall be the same. One sampling system and FTIR analyzer shall be used to measure spiked effluent. The other sampling system and FTIR analyzer shall be used to measure unspiked flue gas. Both systems shall use the same sampling procedure (i.e., batch or continuous).

13.3.1 If batch sampling is used, synchronize the cell evacuation, cell filling, and collection of spectra. Fill both cells at the same rate (in cell volumes per unit time).

13.3.2 If continuous sampling is used, adjust the sample flow through each gas cell so that the same number of cell volumes pass through each cell in a given time (i.e. $TC_1 = TC_2$).

13.4 *Statistical Treatment.* The statistical procedure of EPA Method 301 of this appendix, section 6.3 is used to evaluate the bias and precision. For FTIR testing a validation "run" is defined as spectra of 24 independent samples, 12 of which are spiked with the analyte(s) and 12 of which are not spiked.

13.4.1 *Bias.* Determine the bias (defined by EPA Method 301 of this appendix, section 6.3.2) using equation 7:

$$B = S_m - CS \qquad (7)$$

Where:

B = Bias at spike level.

S_m = Mean concentration of the analyte spiked samples.

CS = Expected concentration of the spiked samples.

13.4.2 *Correction Factor.* Use section 6.3.2.2 of Method 301 of this appendix to evaluate the statistical significance of the bias. If it is determined that the bias is significant, then use section 6.3.3 of Method 301 to calculate a correction factor (CF). Analytical results of the test method are multiplied by the correction factor, if $0.7 \leq CF \leq 1.3$. If is determined that the bias is significant and CF > ±30 percent, then the test method is considered to "not valid."

13.4.3 If measurements do not pass validation, evaluate the sampling system, instrument configuration, and analytical system to determine if improper set-up or a malfunction was the cause. If so, repair the system and repeat the validation.

14.0 *Pollution Prevention.*

The extracted sample gas is vented outside the enclosure containing the FTIR system and gas manifold after the analysis. In typical method applications the vented sample volume is a small fraction of the source volumetric flow and its composition is identical to that emitted from the source. When analyte spiking is used, spiked pollutants are vented with the extracted sample gas. Approximately 1.6×10^{-4} to 3.2×10^{-4} lbs of a single HAP may be vented to the atmosphere in a typical validation run of 3 hours. (This assumes a molar mass of 50 to 100 g, spike rate of 1.0 L/min, and a standard concentration of 100 ppm). Minimize emissions by keeping the spike flow off when not in use.

15.0 *Waste Management.*

Small volumes of laboratory gas standards can be vented through a laboratory hood. Neat samples must be packed and disposed according to applicable regulations. Surplus materials may be returned to supplier for disposal.

16.0 *References.*

1. "Field Validation Test Using Fourier Transform Infrared (FTIR) Spectrometry To Measure Formaldehyde, Phenol and Methanol at a Wool Fiberglass Production Facility." Draft. U.S. Environmental Protection Agency Report, EPA Contract No. 68D20163, Work Assignment I-32, September 1994.

2. "FTIR Method Validation at a Coal-Fired Boiler". Prepared for U.S. Environmental Protection Agency, Research Triangle Park, NC. Publication No.: EPA-454/R95-004, NTIS No.: PB95-193199. July, 1993.

3. "Method 301—Field Validation of Pollutant Measurement Methods from Various Waste Media." 40 CFR part 63, appendix A.

4. "Molecular Vibrations; The Theory of Infrared and Raman Vibrational Spectra." E. Bright Wilson, J. C. Decius, and P. C. Cross. Dover Publications, Inc., 1980. For a less intensive treatment of molecular rotational-vibrational spectra see, for example, "Physical Chemistry," G. M. Barrow, chapters 12, 13, and 14, McGraw Hill, Inc., 1979.

5. "Fourier Transform Infrared Spectrometry," Peter R. Griffiths and James de Haseth, Chemical Analysis, 83, 16-25,(1986), P. J. Elving, J. D. Winefordner and I. M. Kolthoff (ed.), John Wiley and Sons.

6. "Computer-Assisted Quantitative Infrared Spectroscopy," Gregory L. McClure (ed.), ASTM Special Publication 934 (ASTM), 1987.

7. "Multivariate Least-Squares Methods Applied to the Quantitative Spectral Analysis of Multicomponent Mixtures," Applied Spectroscopy, 39(10), 73-84, 1985.

TABLE 1.—EXAMPLE PRESENTATION OF SAMPLING DOCUMENTATION.

Sample time	Spectrum file name	Background file name	Sample conditioning	Process condition

Sample time	Spectrum file	Interferogram	Resolution	Scans	Apodization	Gain	CTS Spectrum

BILLING CODE 6560-50-P

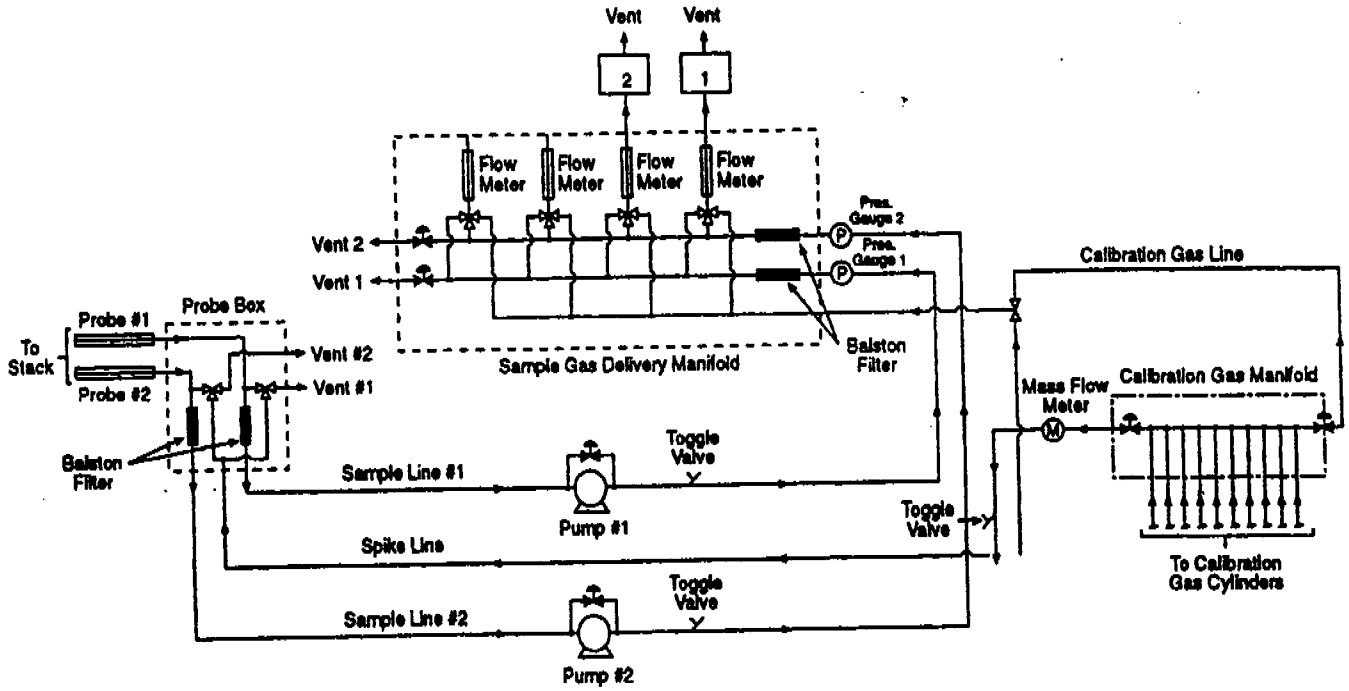

Figure 1. Extractive FTIR sampling system.

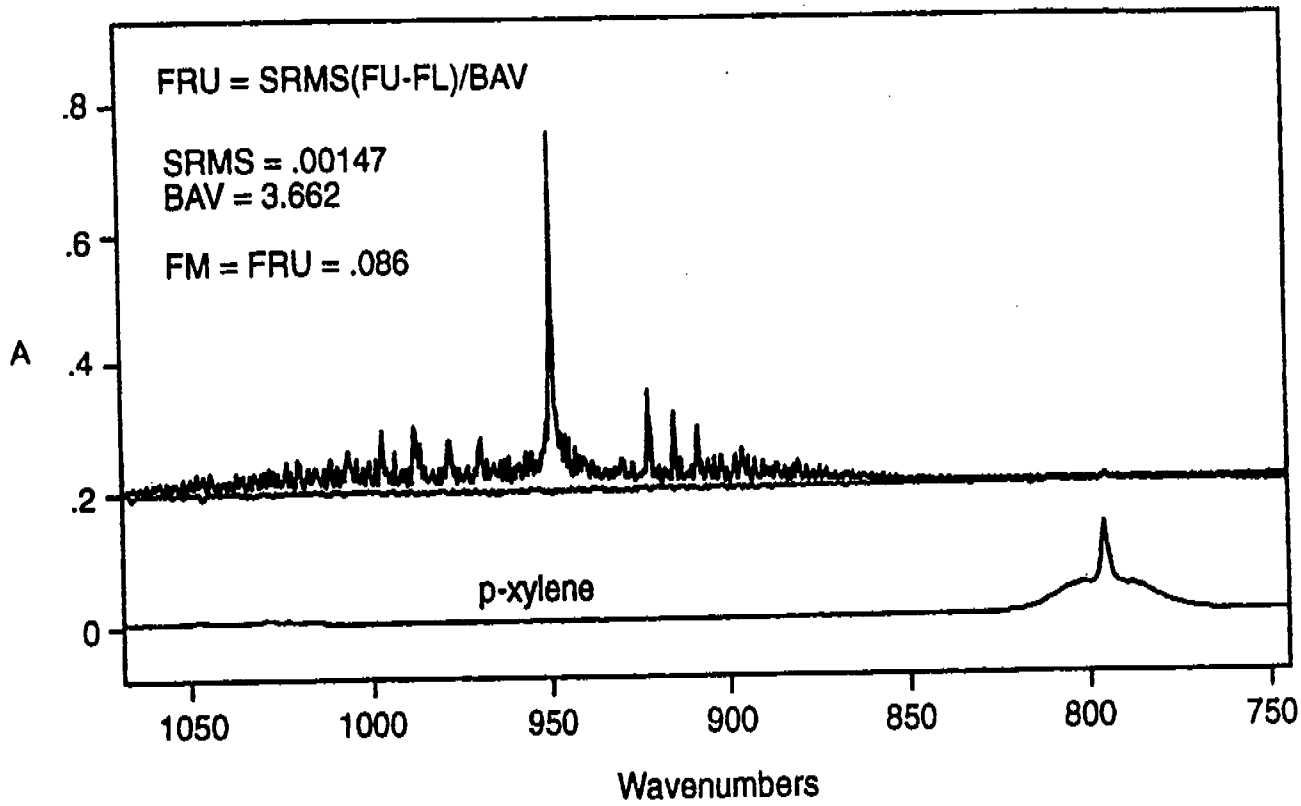

Figure 2. Fractional Reproducibility. Top: average of cts1031a and cts1101b. Bottom: Reference spectrum of p-xylene.

BILLING CODE 6560–50–O

Addendum to Test Method 320—Protocol for the Use of Extractive Fourier Transform Infrared (FTIR) Spectrometry for the Analyses of Gaseous Emissions from Stationary Sources

1.0 *Introduction*

The purpose of this addendum is to set general guidelines for the use of modern FTIR spectroscopic methods for the analysis of gas samples extracted from the effluent of stationary emission sources. This addendum outlines techniques for developing and evaluating such methods and sets basic requirements for reporting and quality assurance procedures.

1.1 *Nomenclature*

1.1.1 Appendix A to this addendum lists definitions of the symbols and terms used in this Protocol, many of which have been taken directly from American Society for Testing and Materials (ASTM) publication E 131–90a, entitled "Terminology Relating to Molecular Spectroscopy."

1.1.2 Except in the case of background spectra or where otherwise noted, the term "spectrum" refers to a double-beam spectrum in units of absorbance vs. wavenumber (cm^{-1}).

1.1.3 The term "Study" in this addendum refers to a publication that has been subjected to EPA- or peer-review.

2.0 *Applicability and Analytical Principle*

2.1 *Applicability.* This Protocol applies to the determination of compound-specific concentrations in single- and multiple-component gas phase samples using double-beam absorption spectroscopy in the mid-infrared band. It does not specifically address other FTIR applications, such as single-beam spectroscopy, analysis of open-path (non-enclosed) samples, and continuous measurement techniques. If multiple spectrometers, absorption cells, or instrumental linewidths are used in such analyses, each distinct operational configuration of the system must be evaluated separately according to this Protocol.

2.2 *Analytical Principle*

2.2.1 In the mid-infrared band, most molecules exhibit characteristic gas phase absorption spectra that may be recorded by FTIR systems. Such systems consist of a source of mid-infrared radiation, an interferometer, an enclosed sample cell of known absorption pathlength, an infrared detector, optical elements for the transfer of infrared radiation between components, and gas flow control and measurement components. Adjunct and integral computer systems are used for controlling the instrument, processing the signal, and for performing both Fourier transforms and quantitative analyses of spectral data.

2.2.2 The absorption spectra of pure gases and of mixtures of gases are described by a linear absorbance theory referred to as Beer's Law. Using this law, modern FTIR systems use computerized analytical programs to quantify compounds by comparing the absorption spectra of known (reference) gas samples to the absorption spectrum of the sample gas. Some standard mathematical techniques used for comparisons are classical least squares, inverse least squares, cross-correlation, factor analysis, and partial least squares. Reference A describes several of these techniques, as well as additional techniques, such as differentiation methods, linear baseline corrections, and non-linear absorbance corrections.

3.0 *General Principles of Protocol Requirements*

The characteristics that distinguish FTIR systems from gas analyzers used in instrumental gas analysis methods (e.g., Methods 6C and 7E of appendix A to part 60 of this chapter) are: (1) Computers are necessary to obtain and analyze data; (2) chemical concentrations can be quantified using previously recorded infrared reference

spectra; and (3) analytical assumptions and results, including possible effects of interfering compounds, can be evaluated after the quantitative analysis. The following general principles and requirements of this Protocol are based on these characteristics.

3.1 *Verifiability and Reproducibility of Results.* Store all data and document data analysis techniques sufficient to allow an independent agent to reproduce the analytical results from the raw interferometric data.

3.2 *Transfer of Reference Spectra.* To determine whether reference spectra recorded under one set of conditions (e.g., optical bench, instrumental linewidth, absorption pathlength, detector performance, pressure, and temperature) can be used to analyze sample spectra taken under a different set of conditions, quantitatively compare "calibration transfer standards" (CTS) and reference spectra as described in this Protocol. (Note: The CTS may, but need not, include analytes of interest). To effect this, record the absorption spectra of the CTS (a) immediately before and immediately after recording reference spectra and (b) immediately after recording sample spectra.

3.3 *Evaluation of FTIR Analyses.* The applicability, accuracy, and precision of FTIR measurements are influenced by a number of interrelated factors, which may be divided into two classes:

3.3.1 *Sample-Independent Factors.* Examples are system configuration and performance (e.g., detector sensitivity and infrared source output), quality and applicability of reference absorption spectra, and type of mathematical analyses of the spectra. These factors define the fundamental limitations of FTIR measurements for a given system configuration. These limitations may be estimated from evaluations of the system before samples are available. For example, the detection limit for the absorbing compound under a given set of conditions may be estimated from the system noise level and the strength of a particular absorption band. Similarly, the accuracy of measurements may be estimated from the analysis of the reference spectra.

3.3.2 *Sample-Dependent Factors.* Examples are spectral interferants (e.g., water vapor and CO_2) or the overlap of spectral features of different compounds and contamination deposits on reflective surfaces or transmitting windows. To maximize the effectiveness of the mathematical techniques used in spectral analysis, identification of interferants (a standard initial step) and analysis of samples (includes effect of other analytical errors) are necessary. Thus, the Protocol requires post-analysis calculation of measurement concentration uncertainties for the detection of these potential sources of measurement error.

4.0 *Pre-Test Preparations and Evaluations*

Before testing, demonstrate the suitability of FTIR spectrometry for the desired application according to the procedures of this section.

4.1 *Identify Test Requirements.* Identify and record the test requirements described in sections 4.1.1 through 4.1.4 of this addendum. These values set the desired or required goals of the proposed analysis; the description of methods for determining whether these goals are actually met during the analysis comprises the majority of this Protocol.

4.1.1 Analytes (specific chemical species) of interest. Label the analytes from i = 1 to I.

4.1.2 Analytical uncertainty limit (AU_i). The AU_i is the maximum permissible fractional uncertainty of analysis for the ith analyte concentration, expressed as a fraction of the analyte concentration in the sample.

4.1.3 Required detection limit for each analyte (DL_i, ppm). The detection limit is the lowest concentration of an analyte for which its overall fractional uncertainty (OFU_i) is required to be less than its analytical uncertainty limit (AU_i).

4.1.4 Maximum expected concentration of each analyte ($CMAX_i$, ppm).

4.2 *Identify Potential Interferants.* Considering the chemistry of the process or results of previous studies, identify potential interferants, i.e., the major effluent constituents and any relatively minor effluent constituents that possess either strong absorption characteristics or strong structural similarities to any analyte of interest. Label them 1 through N_j, where the subscript "j" pertains to potential interferants. Estimate the concentrations of these compounds in the effluent ($CPOT_j$, ppm).

4.3 *Select and Evaluate the Sampling System.* Considering the source, e.g., temperature and pressure profiles, moisture content, analyte characteristics, and particulate concentration), select the equipment for extracting gas samples. Recommended are a particulate filter, heating system to maintain sample temperature above the dew point for all sample constituents at all points within the sampling system (including the filter), and sample conditioning system (e.g., coolers, water-permeable membranes that remove water or other compounds from the sample, and dilution devices) to remove spectral interferants or to protect the sampling and analytical components. Determine the minimum absolute sample system pressure (P_{min}, mmHg) and the infrared absorption cell volume (V_{SS}, liter). Select the techniques and/or equipment for the measurement of sample pressures and temperatures.

4.4 *Select Spectroscopic System.* Select a spectroscopic configuration for the application. Approximate the absorption pathlength (L_S', meter), sample pressure (P_S', kPa), absolute sample temperature T_S', and signal integration period (t_{SS}, seconds) for the analysis. Specify the nominal minimum instrumental linewidth (MIL) of the system. Verify that the fractional error at the approximate values P_S' and T_S' is less than one half the smallest value AU_i (see section 4.1.2 of this addendum).

4.5 Select Calibration Transfer Standards (CTS's). Select CTS's that meet the criteria listed in sections 4.5.1, 4.5.2, and 4.5.3 of this addendum.

Note: It may be necessary to choose preliminary analytical regions (see section 4.7 of this addendum), identify the minimum analyte linewidths, or estimate the system noise level (see section 4.12 of this addendum) before selecting the CTS. More than one compound may be needed to meet the criteria: if so, obtain separate cylinders for each compound.

4.5.1 The central wavenumber position of each analytical region shall lie within 25 percent of the wavenumber position of at least one CTS absorption band.

4.5.2 The absorption bands in section 4.5.1 of this addendum shall exhibit peak absorbances greater than ten times the value RMS_{EST} (see section 4.12 of this addendum) but less than 1.5 absorbance units.

4.5.3 At least one absorption CTS band within the operating range of the FTIR instrument shall have an instrument-independent linewidth no greater than the narrowest analyte absorption band. Perform and document measurements or cite Studies to determine analyte and CTS compound linewidths.

4.5.4 For each analytical region, specify the upper and lower wavenumber positions (FFU_m and FFL_m, respectively) that bracket the CTS absorption band or bands for the associated analytical region. Specify the wavenumber range, FNU to FNL, containing the absorption band that meets the criterion of section 4.5.3 of this addendum.

4.5.5 Associate, whenever possible, a single set of CTS gas cylinders with a set of reference spectra. Replacement CTS gas cylinders shall contain the same compounds at concentrations within 5 percent of that of the original CTS cylinders; the entire absorption spectra (not individual spectral segments) of the replacement gas shall be scaled by a factor between 0.95 and 1.05 to match the original CTS spectra.

4.6 *Prepare Reference Spectra*

Note: Reference spectra are available in a permanent soft copy from the EPA spectral library on the EMTIC (Emission Measurement Technical Information Center) computer bulletin board; they may be used if applicable.

4.6.1 Select the reference absorption pathlength (L_R) of the cell.

4.6.2 Obtain or prepare a set of chemical standards for each analyte, potential and known spectral interferants, and CTS. Select the concentrations of the chemical standards to correspond to the top of the desired range.

4.6.2.1 *Commercially-Prepared Chemical Standards.* Chemical standards for many compounds may be obtained from independent sources, such as a specialty gas manufacturer, chemical company, or commercial laboratory. These standards (accurate to within ±2 percent) shall be prepared according to EPA Traceability Protocol (see Reference D) or shall be traceable to NIST standards. Obtain from the supplier an estimate of the stability of the analyte concentration. Obtain and follow all of the supplier's recommendations for recertifying the analyte concentration.

4.6.2.2 *Self-Prepared Chemical Standards.* Chemical standards may be prepared by diluting certified commercially prepared chemical gases or pure analytes with ultra-pure carrier (UPC) grade nitrogen according to the barometric and volumetric techniques generally described in Reference A, section A4.6.

4.6.3 Record a set of the absorption spectra of the CTS {R1}, then a set of the reference spectra at two or more concentrations in duplicate over the desired range (the top of the range must be less than 10 times that of the bottom), followed by a second set of CTS spectra {R2}. (If self-prepared standards are used, see section 4.6.5 of this addendum before disposing of any of the standards.) The maximum accepted standard concentration-pathlength product (ASCPP) for each compound shall be higher than the maximum estimated concentration-pathlength products for both analytes and known interferants in the effluent gas. For each analyte, the minimum ASCPP shall be no greater than ten times the concentration-pathlength product of that analyte at its required detection limit.

4.6.4 Permanently store the background and interferograms in digitized form. Document details of the mathematical process for generating the spectra from these interferograms. Record the sample pressure (P_R), sample temperature (T_R), reference absorption pathlength (L_R), and interferogram signal integration period (t_{SR}). Signal integration periods for the background interferograms shall be $\geq t_{SR}$. Values of P_R, L_R, and t_{SR} shall not deviate by more than ±1 percent from the time of recording {R1} to that of recording {R2}.

4.6.5 If self-prepared chemical standards are employed and spectra of only two concentrations are recorded for one or more compounds, verify the accuracy of the dilution technique by analyzing the prepared standards for those compounds with a secondary (non-FTIR) technique in accordance with sections 4.6.5.1 through 4.6.5.4 of this addendum.

4.6.5.1 Record the response of the secondary technique to each of the four standards prepared.

4.6.5.2 Perform a linear regression of the response values (dependant variable) versus the accepted standard concentration (ASC) values (independent variable), with the regression constrained to pass through the zero-response, zero ASC point.

4.6.5.3 Calculate the average fractional difference between the actual response values and the regression-predicted values (those calculated from the regression line using the four ASC values as the independent variable).

4.6.5.4 If the average fractional difference value calculated in section 4.6.5.3 of this addendum is larger for any compound than the corresponding AU_i, the dilution technique is not sufficiently accurate and the reference spectra prepared are not valid for the analysis.

4.7 *Select Analytical Regions.* Using the general considerations in section 7 of Reference A and the spectral characteristics of the analytes and interferants, select the analytical regions for the application. Label them m = 1 to M. Specify the lower, center and upper wavenumber positions of each analytical region (FL_m, FC_m, and FU_m, respectively). Specify the analytes and interferants which exhibit absorption in each region.

4.8 *Determine Fractional Reproducibility Uncertainties.* Using appendix E of this addendum, calculate the fractional reproducibility uncertainty for each analyte (FRU_i) from a comparison of {R1} and {R2}. If $FRU_i > AU_i$ for any analyte, the reference spectra generated in accordance with section 4.6 of this addendum are not valid for the application.

4.9 *Identify Known Interferants.* Using appendix B of this addendum, determine which potential interferants affect the analyte concentration determinations. Relabel these potential interferant as "known" interferants, and designate these compounds from k = 1 to K. Appendix B to this addendum also provides criteria for determining whether the selected analytical regions are suitable.

4.10 *Prepare Computerized Analytical Programs*

4.10.1 Choose or devise mathematical techniques (e.g. classical least squares, inverse least squares, cross-correlation, and factor analysis) based on equation 4 of Reference A that are appropriate for analyzing spectral data by comparison with reference spectra.

4.10.2 Following the general recommendations of Reference A, prepare a computer program or set of programs that analyzes all of the analytes and known interferants, based on the selected analytical regions (section 4.7 of this addendum) and the prepared reference spectra (section 4.6 of this addendum). Specify the baseline correction technique (e.g., determining the slope and intercept of a linear baseline contribution in each analytical region) for each analytical region, including all relevant wavenumber positions.

4.10.3 Use programs that provide as output [at the reference absorption pathlength (L_R), reference gas temperature (T_R), and reference gas pressure (P_R)] the analyte concentrations, the known interferant concentrations, and the baseline slope and intercept values. If the sample absorption pathlength (L_S), sample gas temperature (T_S), or sample gas pressure (P_S) during the actual sample analyses differ from L_R, T_R, and P_R, use a program or set of programs that applies multiplicative corrections to the derived concentrations to account for these variations, and that provides as output both the corrected and uncorrected values. Include in the report of the analysis (see section 7.0 of this addendum) the details of any transformations applied to the original reference spectra (e.g., differentiation), in such a fashion that all analytical results may be verified by an independent agent from the reference spectra and data spectra alone.

4.11 *Determine the Fractional Calibration Uncertainty.* Calculate the fractional calibration uncertainty for each analyte ($FCUi$) according to appendix F of this addendum, and compare these values to the fractional uncertainty limits (AU_i; see section 4.1.2 of this addendum). If $FCU_i > AU_i$, either the reference spectra or analytical programs for that analyte are unsuitable.

4.12 *Verify System Configuration Suitability.* Using appendix C of this addendum, measure or obtain estimates of the noise level (RMS_{EST}, absorbance) of the FTIR system. Alternatively, construct the complete spectrometer system and determine the values RMS_{Sm} using appendix G of this addendum. Estimate the minimum measurement uncertainty for each analyte (MAU_i, ppm) and known interferant (MIU_k, ppm) using appendix D of this addendum. Verify that (a) $MAU_i < (AU_i)(DL_i)$, $FRUi < AU_i$, and $FCUi < AU_i$ for each analyte and that (b) the CTS chosen meets the requirements listed in sections 4.5.1 through 4.5.5 of this addendum.

5.0 *Sampling and Analysis Procedure*

5.1 *Analysis System Assembly and Leak-Test.* Assemble the analysis system. Allow sufficient time for all system components to reach the desired temperature. Then, determine the leak-rate (L_R) and leak volume (V_L), where $V_L = L_R\, t_{SS}$. Leak volumes shall be ≤4 percent of V_{SS}.

5.2 *Verify Instrumental Performance.* Measure the noise level of the system in each analytical region using the procedure of appendix G of this addendum. If any noise level is higher than that estimated for the system in section 4.12 of this addendum, repeat the calculations of appendix D of this addendum and verify that the requirements of section 4.12 of this addendum are met; if they are not, adjust or repair the instrument and repeat this section.

5.3 *Determine the Sample Absorption Pathlength*

Record a background spectrum. Then, fill the absorption cell with CTS at the pressure P_R and record a set of CTS spectra {R3}. Store the background and unscaled CTS single beam interferograms and spectra. Using appendix H of this addendum, calculate the sample absorption pathlength (L_S) for each analytical region. The values L_S shall not differ from the approximated sample pathlength L_S' (see section 4.4 of this addendum) by more than 5 percent.

5.4 *Record Sample Spectrum.* Connect the sample line to the source. Either evacuate the absorption cell to an absolute pressure below 5 mmHg before extracting a sample from the effluent stream into the absorption cell, or pump at least ten cell volumes of sample through the cell before obtaining a sample. Record the sample pressure P_S. Generate the absorbance spectrum of the sample. Store the background and sample single beam interferograms, and document the process by which the absorbance spectra are generated from these data. (If necessary, apply the spectral transformations developed in section 5.6.2 of this addendum). The resulting sample spectrum is referred to below as S_S.

Note: Multiple sample spectra may be recorded according to the procedures of section 5.4 of this addendum before performing sections 5.5 and 5.6 of this addendum.

5.5 *Quantify Analyte Concentrations.* Calculate the unscaled analyte concentrations RUA_i and unscaled interferant concentrations RUI_K using the programs developed in section 4 of this addendum. To correct for pathlength and pressure variations between the reference and sample spectra, calculate the scaling factor, R_{LPS} using equation A.1,

$$R_{LPS} = (L_R P_R T_S)/(L_S P_S T_R) \quad (A.1)$$

Calculate the final analyte and interferant concentrations RSA_i and RSI_k using equations A.2 and A.3.

$$RSA_i = R_{LPS}RUA_i \quad (A.2)$$

$$RSI_k = R_{LPS}RUI_k \quad (A.3)$$

5.6 *Determine Fractional Analysis Uncertainty.* Fill the absorption cell with CTS at the pressure P_S. Record a set of CTS spectra {R4}. Store the background and CTS single beam interferograms. Using appendix H of this addendum, calculate the fractional analysis uncertainty (FAU) for each analytical region. If the FAU indicated for any analytical region is greater than the required accuracy requirements determined in sections 4.1.1 through 4.1.4 of this addendum, then comparisons to previously recorded reference spectra are invalid in that analytical region, and the analyst shall perform one or both of the procedures of sections 5.6.1 through 5.6.2 of this addendum.

5.6.1 Perform instrumental checks and adjust the instrument to restore its performance to acceptable levels. If adjustments are made, repeat sections 5.3, 5.4 (except for the recording of a sample spectrum), and 5.5 of this addendum to demonstrate that acceptable uncertainties are obtained in all analytical regions.

5.6.2 Apply appropriate mathematical transformations (e.g., frequency shifting, zero-filling, apodization, smoothing) to the spectra (or to the interferograms upon which the spectra are based) generated during the performance of the procedures of section 5.3 of this addendum. Document these transformations and their reproducibility. Do not apply multiplicative scaling of the spectra, or any set of transformations that is mathematically equivalent to multiplicative scaling. Different transformations may be applied to different analytical regions. Frequency shifts shall be less than one-half the minimum instrumental linewidth, and must be applied to all spectral data points in an analytical region. The mathematical transformations may be retained for the analysis if they are also applied to the appropriate analytical regions of all sample spectra recorded, and if all original sample spectra are digitally stored. Repeat sections 5.3, 5.4 (except the recording of a sample spectrum), and 5.5 of this addendum to demonstrate that these transformations lead to acceptable calculated concentration uncertainties in all analytical regions.

6.0 Post-Analysis Evaluations

Estimate the overall accuracy of the analyses performed in accordance with sections 5.1 through 5.6 of this addendum using the procedures of sections 6.1 through 6.3 of this addendum.

6.1 *Qualitatively Confirm the Assumed Matrix.* Examine each analytical region of the sample spectrum for spectral evidence of unexpected or unidentified interferants. If found, identify the interfering compounds (see Reference C for guidance) and add them to the list of known interferants. Repeat the procedures of section 4 of this addendum to include the interferants in the uncertainty calculations and analysis procedures. Verify that the MAU and FCU values do not increase beyond acceptable levels for the application requirements. Re-calculate the analyte concentrations (section 5.5 of this addendum) in the affected analytical regions.

6.2 *Quantitatively Evaluate Fractional Model Uncertainty (FMU).* Perform the procedures of either section 6.2.1 or 6.2.2 of this addendum:

6.2.1 Using appendix I of this addendum, determine the fractional model error (FMU) for each analyte.

6.2.2 Provide statistically determined uncertainties FMU for each analyte which are equivalent to two standard deviations at the 95 percent confidence level. Such determinations, if employed, must be based on mathematical examinations of the pertinent sample spectra (not the reference spectra alone). Include in the report of the analysis (see section 7.0 of this addendum) a complete description of the determination of the concentration uncertainties.

6.3 *Estimate Overall Concentration Uncertainty (OCU).* Using appendix J of this addendum, determine the overall concentration uncertainty (OCU) for each analyte. If the OCU is larger than the required accuracy for any analyte, repeat sections 4 and 6 of this addendum.

7.0 *Reporting Requirements*

[Documentation pertaining to virtually all the procedures of sections 4, 5, and 6 will be required. Software copies of reference spectra and sample spectra will be retained for some minimum time following the actual testing.]

8.0 *References*

(A) Standard Practices for General Techniques of Infrared Quantitative Analysis (American Society for Testing and Materials, Designation E 168–88).

(B) The Coblentz Society Specifications for Evaluation of Research Quality Analytical Infrared Reference Spectra (Class II); Anal. Chemistry 47, 945A (1975); Appl. Spectroscopy 444, pp. 211–215, 1990.

(C) Standard Practices for General Techniques for Qualitative Infrared Analysis, American Society for Testing and Materials, Designation E 1252–88.

(D) "EPA Traceability Protocol for Assay and Certification of Gaseous Calibration Standards," U.S. Environmental Protection Agency Publication No. EPA/600/R–93/224, December 1993.

Appendix A to Addendum to Method 320—Definitions of Terms and Symbols

A.1 *Definitions of Terms.* All terms used in this method that are not defined below have the meaning given to them in the CAA and in subpart A of this part.

Absorption band means a contiguous wavenumber region of a spectrum (equivalently, a contiguous set of absorbance spectrum data points) in which the absorbance passes through a maximum or a series of maxima.

Absorption pathlength means the distance in a spectrophotometer, measured in the direction of propagation of the beam of radiant energy, between the surface of the specimen on which the radiant energy is incident and the surface of the specimen from which it is emergent.

Analytical region means a contiguous wavenumber region (equivalently, a contiguous set of absorbance spectrum data points) used in the quantitative analysis for one or more analytes.

Note: The quantitative result for a single analyte may be based on data from more than one analytical region.

Apodization means modification of the ILS function by multiplying the interferogram by a weighing function whose magnitude varies with retardation.

Background spectrum means the single beam spectrum obtained with all system components without sample present.

Baseline means any line drawn on an absorption spectrum to establish a reference point that represents a function of the radiant power incident on a sample at a given wavelength.

Beers's law means the direct proportionality of the absorbance of a compound in a homogeneous sample to its concentration.

Calibration transfer standard (CTS) gas means a gas standard of a compound used to achieve and/or demonstrate suitable quantitative agreement between sample spectra and the reference spectra; see section 4.5.1 of this addendum.

Compound means a substance possessing a distinct, unique molecular structure.

Concentration (c) means the quantity of a compound contained in a unit quantity of sample. The unit "ppm" (number, or mole, basis) is recommended.

Concentration-pathlength product means the mathematical product of concentration of the species and absorption pathlength. For reference spectra, this is a known quantity; for sample spectra, it is the quantity directly determined from Beer's law. The units "centimeters-ppm" or "meters-ppm" are recommended.

Derivative absorption spectrum means a plot of rate of change of absorbance or of any function of absorbance with respect to wavelength or any function of wavelength.

Double beam spectrum means a transmission or absorbance spectrum derived by dividing the sample single beam spectrum by the background spectrum.

Note: The term "double-beam" is used elsewhere to denote a spectrum in which the sample and background interferograms are collected simultaneously along physically distinct absorption paths. Here, the term denotes a spectrum in which the sample and background interferograms are collected at different times along the same absorption path.

Fast Fourier transform (FFT) means a method of speeding up the computation of a discrete FT by factoring the data into sparse matrices containing mostly zeros.

Flyback means interferometer motion during which no data are recorded.

Fourier transform (FT) means the mathematical process for converting an amplitude-time spectrum to an amplitude-frequency spectrum, or vice versa.

Fourier transform infrared (FTIR) spectrometer means an analytical system that

employs a source of mid-infrared radiation, an interferometer, an enclosed sample cell of known absorption pathlength, an infrared detector, optical elements that transfer infrared radiation between components, and a computer system. The time-domain detector response (interferogram) is processed by a Fourier transform to yield a representation of the detector response vs. infrared frequency.

Note: When FTIR spectrometers are interfaced with other instruments, a slash should be used to denote the interface; e.g., GC/FTIR; HPCL/FTIR, and the use of FTIR should be explicit; i.e., FTIR not IR.

Frequency, ν means the number of cycles per unit time.

Infrared means the portion of the electromagnetic spectrum containing wavelengths from approximately 0.78 to 800 microns.

Interferogram, $I(\sigma)$ means record of the modulated component of the interference signal measured as a function of retardation by the detector.

Interferometer means device that divides a beam of radiant energy into two or more paths, generates an optical path difference between the beams, and recombines them in order to produce repetitive interference maxima and minima as the optical retardation is varied.

Linewidth means the full width at half maximum of an absorption band in units of wavenumbers (cm^{-1}).

Mid-infrared means the region of the electromagnetic spectrum from approximately 400 to 5000 cm^{-1}.

Reference spectra means absorption spectra of gases with known chemical compositions, recorded at a known absorption pathlength, which are used in the quantitative analysis of gas samples.

Retardation, σ means optical path difference between two beams in an interferometer; also known as "optical path difference" or "optical retardation."

Scan means digital representation of the detector output obtained during one complete motion of the interferometer's moving assembly or assemblies.

Scaling means application of a multiplicative factor to the absorbance values in a spectrum.

Single beam spectrum means Fourier-transformed interferogram, representing the detector response vs. wavenumber.

Note: The term "single-beam" is used elsewhere to denote any spectrum in which the sample and background interferograms are recorded on the same physical absorption path; such usage differentiates such spectra from those generated using interferograms recorded along two physically distinct absorption paths (see "double-beam spectrum" above). Here, the term applies (for example) to the two spectra used directly in the calculation of transmission and absorbance spectra of a sample.

Standard reference material means a reference material, the composition or properties of which are certified by a recognized standardizing agency or group.

Note: The equivalent ISO term is "certified reference material."

Transmittance, T means the ratio of radiant power transmitted by the sample to the radiant power incident on the sample. Estimated in FTIR spectroscopy by forming the ratio of the single-beam sample and background spectra.

Wavenumber, $\bar{\nu}$ means the number of waves per unit length.

Note: The usual unit of wavenumber is the reciprocal centimeter, cm^{-1}. The wavenumber is the reciprocal of the wavelength, λ, when λ is expressed in centimeters.

Zero-filling means the addition of zero-valued points to the end of a measured interferogram.

Note: Performing the FT of a zero-filled interferogram results in correctly interpolated points in the computed spectrum.

A.2 *Definitions of Mathematical Symbols.* The symbols used in equations in this protocol are defined as follows:

(1) A, absorbance = the logarithm to the base 10 of the reciprocal of the transmittance (T).

$$A = \log_{10}\left(\frac{1}{T}\right) = -\log_{10} T$$

(2) AAI_{im} = band area of the ith analyte in the mth analytical region, at the concentration (CL_i) corresponding to the product of its required detection limit (DL_i) and analytical uncertainty limit (AU_i).

(3) AAV_{im} = average absorbance of the ith analyte in the mth analytical region, at the concentration (CL_i) corresponding to the product of its required detection limit (DL_i) and analytical uncertainty limit (AU_i).

(4) ASC, accepted standard concentration = the concentration value assigned to a chemical standard.

(5) ASCPP, accepted standard concentration-pathlength product = for a chemical standard, the product of the ASC and the sample absorption pathlength. The units "centimeters-ppm" or "meters-ppm" are recommended.

(6) AU_i, analytical uncertainty limit = the maximum permissible fractional uncertainty of analysis for the ith analyte concentration, expressed as a fraction of the analyte concentration determined in the analysis.

(7) AVT_m = average estimated total absorbance in the mth analytical region.

(8) $CKWN_k$ = estimated concentration of the kth known interferant.

(9) $CMAX_i$ = estimated maximum concentration of the ith analyte.

(10) $CPOT_j$ = estimated concentration of the jth potential interferant.

(11) DL_i, required detection limit = for the ith analyte, the lowest concentration of the analyte for which its overall fractional uncertainty (OFU_i) is required to be less than the analytical uncertainty limit (AU_i).

(12) FC_m = center wavenumber position of the mth analytical region.

(13) FAU_i, fractional analytical uncertainty = calculated uncertainty in the measured concentration of the ith analyte because of errors in the mathematical comparison of reference and sample spectra.

(14) FCU_i, fractional calibration uncertainty = calculated uncertainty in the measured concentration of the ith analyte because of errors in Beer's law modeling of the reference spectra concentrations.

(15) FFL_m = lower wavenumber position of the CTS absorption band associated with the mth analytical region.

(16) FFU_m = upper wavenumber position of the CTS absorption band associated with the mth analytical region.

(17) FL_m = lower wavenumber position of the mth analytical region.

(18) FMU_i, fractional model uncertainty = calculated uncertainty in the measured concentration of the ith analyte because of errors in the absorption model employed.

(19) FN_L = lower wavenumber position of the CTS spectrum containing an absorption band at least as narrow as the analyte absorption bands.

(20) FN_U = upper wavenumber position of the CTS spectrum containing an absorption band at least as narrow as the analyte absorption bands.

(21) FRU_i, fractional reproducibility uncertainty = calculated uncertainty in the measured concentration of the ith analyte because of errors in the reproducibility of spectra from the FTIR system.

(22) FU_m = upper wavenumber position of the mth analytical region.

(23) IAI_{jm} = band area of the jth potential interferant in the mth analytical region, at its expected concentration ($CPOT_j$).

(24) IAV_{im} = average absorbance of the ith analyte in the mth analytical region, at its expected concentration ($CPOT_j$).

(25) $ISC_{i\ or\ k}$, indicated standard concentration = the concentration from the computerized analytical program for a single-compound reference spectrum for the ith analyte or k^{th} known interferant.

(26) kPa = kilo-Pascal (see Pascal).

(27) L_S' = estimated sample absorption pathlength.

(28) L_R = reference absorption pathlength.

(29) L_S = actual sample absorption pathlength.

(30) MAU_i = mean of the MAU_{im} over the appropriate analytical regions.

(31) MAU_{im}, minimum analyte uncertainty = the calculated minimum concentration for which the analytical uncertainty limit (AU_i) in the measurement of the ith analyte, based on spectral data in the mth analytical region, can be maintained.

(32) MIU_j = mean of the MIU_{jm} over the appropriate analytical regions.

(33) MIU_{jm}, minimum interferant uncertainty = the calculated minimum concentration for which the analytical uncertainty limit $CPOT_j/20$ in the measurement of the jth interferant, based on spectral data in the mth analytical region, can be maintained.

(34) MIL, minimum instrumental linewidth = the minimum linewidth from the FTIR system, in wavenumbers.

Note: The MIL of a system may be determined by observing an absorption band known (through higher resolution examinations) to be narrower than indicated by the system. The MIL is fundamentally limited by the retardation of the interferometer, but is also affected by other operational parameters (e.g., the choice of apodization).

(35) N_i = number of analytes.

(36) N_j = number of potential interferants.

(37) N_k = number of known interferants.

(38) N_{scan} = the number of scans averaged to obtain an interferogram.

(39) OFU_i = the overall fractional uncertainty in an analyte concentration determined in the analysis (OFU_i = MAX{FRU_i, FCU_i, FAU_i, FMU_i}).

(40) Pascal (Pa) = metric unit of static pressure, equal to one Newton per square meter; one atmosphere is equal to 101.325 Pa; 1/760 atmosphere (one Torr, or one millimeter Hg) is equal to 133.322 Pa.

(41) P_{min} = minimum pressure of the sampling system during the sampling procedure.

(42) P_S' = estimated sample pressure.

(43) P_R = reference pressure.

(44) P_S = actual sample pressure.

(45) RMS_{Sm} = measured noise level of the FTIR system in the mth analytical region.

(46) RMSD, root mean square difference = a measure of accuracy determined by the following equation:

$$RMSD = \sqrt{\left(\frac{1}{n}\right)\sum_{i=1}^{n} e_i^2}$$

Where:

n = the number of observations for which the accuracy is determined.

e_i = the difference between a measured value of a property and its mean value over the n observations.

Note: The RMSD value "between a set of n contiguous absorbance values (A_i) and the mean of the values" (A_M) is defined as

$$RMSD = \sqrt{\left(\frac{1}{n}\right)\sum_{i=1}^{n}(A_i - A_M)^2}$$

(47) RSA_i = the (calculated) final concentration of the ith analyte.

(48) RSI_k = the (calculated) final concentration of the kth known interferant.

(49) t_{scan}, scan time = time used to acquire a single scan, not including flyback.

(50) t_S, signal integration period = the period of time over which an interferogram is averaged by addition and scaling of individual scans. In terms of the number of scans N_{scan} and scan time t_{scan}, $t_S = N_{scan}t_{scan}$.

(51) t_{SR} = signal integration period used in recording reference spectra.

(52) t_{SS} = signal integration period used in recording sample spectra.

(53) T_R = absolute temperature of gases used in recording reference spectra.

(54) T_S = absolute temperature of sample gas as sample spectra are recorded.

(55) TP, Throughput = manufacturer's estimate of the fraction of the total infrared power transmitted by the absorption cell and transfer optics from the interferometer to the detector.

(56) V_{SS} = volume of the infrared absorption cell, including parts of attached tubing.

(57) W_{ik} = weight used to average over analytical regions k for quantities related to the analyte i; see appendix D of this addendum.

Appendix B to Addendum to Method 320—Identifying Spectral Interferants

B.1 *General*

B.1.1 Assume a fixed absorption pathlength equal to the value L_S'.

B.1.2 Use band area calculations to compare the relative absorption strengths of the analytes and potential interferants. In the mth analytical region (FL_m to FU_m), use either rectangular or trapezoidal approximations to determine the band areas described below (see Reference A, sections A.3.1 through A.3.3). Document any baseline corrections applied to the spectra.

B.1.3 Use the average total absorbance of the analytes and potential interferants in each analytical region to determine whether the analytical region is suitable for analyte concentration determinations.

Note: The average absorbance in an analytical region is the band area divided by the width of the analytical region in wavenumbers. The average total absorbance in an analytical region is the sum of the average absorbances of all analytes and potential interferants.

B.2 *Calculations*

B.2.1 Prepare spectral representations of each analyte at the concentration CL_i = (DL_i)(AU_i), where DL_i is the required detection limit and AU_i is the maximum permissible analytical uncertainty. For the mth analytical region, calculate the band area (AAI_{im}) and average absorbance (AAV_{im}) from these scaled analyte spectra.

B.2.2 Prepare spectral representations of each potential interferant at its expected concentration ($CPOT_j$). For the mth analytical region, calculate the band area (IAI_{jm}) and average absorbance (IAV_{jm}) from these scaled potential interferant spectra.

B.2.3 Repeat the calculation for each analytical region, and record the band area results in matrix form as indicated in Figure B.1.

B.2.4 If the band area of any potential interferant in an analytical region is greater than the one-half the band area of any analyte (i.e., $IAI_{jm} > 0.5\ AAI_{im}$ for any pair ij and any m), classify the potential interferant as a known interferant. Label the known interferants k = 1 to K. Record the results in matrix form as indicated in Figure B.2.

B.2.5 Calculate the average total absorbance (AVT_m) for each analytical region and record the values in the last row of the matrix described in Figure B.2. Any analytical region where $AVT_m > 2.0$ is unsuitable.

BILLING CODE 6560-50-P

FIGURE B.1 Presentation of Potential Interferant Calculations.

	Analytical Regions 1 . . . . . M
Analyte Labels	
1	AAI_{11} . . . AAI_{1M}
.	. .
.	. .
I	AAI_{I1} . . . AAI_{IM}
Potential Interferant Labels	
1	IAI_{11} . . . IAI_{1M}
.	. .
.	. .
J	IAI_{J1} . . . IAI_{JM}

FIGURE B.2 Presentation of Known Interferant Calculations

	Analytical Regions 1 . . . . . M
Analyte Labels	
1	AAI_{11} . . . . . AAI_{1M}
.	. .
.	. .
I	AAI_{I1} . . . . . AAI_{IM}
Known Interferant Labels	
1	IAI_{11} . . . . . IAI_{1M}
.	. .
.	. .
K	IAI_{K1} . . . . . IAI_{KM}
	323
Total Average Absorbance	AVT_1 AVT_M

BILLING CODE 6560–50–C

Appendix C to Addendum to Method 320—Estimating Noise Levels

C.1 *General*

C.1.1 The root-mean-square (RMS) noise level is the standard measure of noise in this addendum. The RMS noise level of a contiguous segment of a spectrum is defined as the RMS difference (RMSD) between the absorbance values which form the segment and the mean value of that segment (see appendix A of this addendum).

C.1.2 The RMS noise value in double-beam absorbance spectra is assumed to be inversely proportional to: (a) the square root of the signal integration period of the sample single beam spectra from which it is formed, and (b) the total infrared power transmitted through the interferometer and absorption cell.

C.1.3 Practically, the assumption of C.1.2 allows the RMS noise level of a complete system to be estimated from the quantities described in sections C.1.3.1 through C.1.3.4:

C.1.3.1 RMS_{MAN}, the noise level of the system (in absorbance units), without the absorption cell and transfer optics, *under those conditions necessary to yield the specified minimum instrumental linewidth*, e.g., Jacquinot stop size.

C.1.3.2 t_{MAN}, the manufacturer's signal integration time used to determine RMS_{MAN}.

C.1.3.3 t_{SS}, the signal integration time for the analyses.

C.1.3.4 TP, the manufacturer's estimate of the fraction of the total infrared power transmitted by the absorption cell and transfer optics from the interferometer to the detector.

C.2 *Calculations*

C.2.1 Obtain the values of RMS_{MAN}, t_{MAN}, and TP from the manufacturers of the equipment, or determine the noise level by direct measurements with the completely constructed system proposed in section 4 of this addendum.

C.2.2 Calculate the noise value of the system (RMS_{EST}) using equation C.1.

$$RMS_{EST} = RMS_{MAN}\ TP\sqrt{\frac{t_{ss}}{t_{MAN}}} \qquad (C.1)$$

Appendix D to Addendum to Method 320—Estimating Minimum Concentration Measurement Uncertainties (MAU and MIU)

D.1 *General*

Estimate the minimum concentration measurement uncertainties for the ith analyte (MAU_i) and j^{th} interferant (MIU_j) based on the spectral data in the mth analytical region by comparing the analyte band area in the analytical region (AAI_{im}) and estimating or measuring the noise level of the system (RMS_{EST} or RMS_{SM}).

Note: For a single analytical region, the MAU or MIU value is the concentration of the analyte or interferant for which the band area is equal to the product of the analytical region width (in wavenumbers) and the noise level of the system (in absorbance units). If data from more than one analytical region are used in the determination of an analyte concentration, the MAU or MIU is the mean of the separate MAU or MIU values calculated for each analytical region.

D.2 *Calculations*

D.2.1 For each analytical region, set RMS = RMS_{SM} if measured (appendix G of this addendum), or set RMS = RMS_{EST} if estimated (appendix C of this addendum).

D.2.2 For each analyte associated with the analytical region, calculate MAU_{im} using equation D.1.

$$MAU_{im} = (RMS)\,(DL_i)\,(AU_i)\frac{(FU_m - FL_m)}{AAI_{im}} \qquad (D.1)$$

D.2.3 If only the mth analytical region is used to calculate the concentration of the ith analyte, set $MAU_i = MAU_{im}$.

D.2.4 If more than one analytical region is used to calculate the concentration of the ith analyte, set MAU_i equal to the weighted mean of the appropriate MAU_{im} values calculated above; the weight for each term in the mean is equal to the fraction of the total wavenumber range used for the calculation represented by each analytical region. Mathematically, if the set of analytical regions employed is {m'}, then the MAU for each analytical region is given by equation D.2.

$$MAU_i = \sum_{k\in\{m'\}} W_k MAU_{ik} \qquad (D.2)$$

where the weight W_{ik} is defined for each term in the sum as

$$W_{ik} = (FM_k - FL_k)\left(\sum_{p\in\{m'\}}\left[FM_p - FL_p\right]\right)^{-1} \qquad (D.3)$$

D.2.5 Repeat sections D.2.1 through D.2.4 of this appendix to calculate the analogous values MIU_j for the interferants j = 1 to J. Replace the value (AU_i) (DL_i) in equation D.1 with $CPOT_j/20$; replace the value AAI_{im} in equation D.1 with IAI_{jm}.

Appendix E to Addendum to Method 320—Determining Fractional Reproducibility Uncertainties (FRU)

E.1 *General*

To estimate the reproducibility of the spectroscopic results of the system, compare the CTS spectra recorded before and after preparing the reference spectra. Compare the difference between the spectra to their average band area. Perform the calculation for each analytical region on the portions of the CTS spectra associated with that analytical region.

E.2 *Calculations*

E.2.1 The CTS spectra {R1} consist of N spectra, denoted by S_{1i}, i=1, N. Similarly, the CTS spectra {R2} consist of N spectra, denoted by S_{2i}, i=1, N. Each S_{ki} is the spectrum of a single compound, where i denotes the compound and k denotes the set {Rk} of which S_{ki} is a member. Form the spectra S_3 according to $S_{3i} = S_{2i} - S_{1i}$ for each i. Form the spectra S_4 according to $S_{4i} = [S_{2i}+S_{1i}]/2$ for each i.

E.2.2 Each analytical region m is associated with a portion of the CTS spectra S_{2i} and S_{1i}, for a particular i, with lower and upper wavenumber limits FFL_m and FFU_m, respectively.

E.2.3 For each m and the associated i, calculate the band area of S_{4i} in the wavenumber range FFU_m to FFL_m. Follow the guidelines of section B.1.2 of this addendum for this band area calculation. Denote the result by BAV_m.

E.2.4 For each m and the associated i, calculate the RMSD of S_{3i} between the absorbance values and their mean in the wavenumber range FFU_m to FFL_m. Denote the result by $SRMS_m$.

E.2.5 For each analytical region m, calculate FM_m using equation E.1.

$$FM_m = SRMS_m(FFU_m - FFL_m)/BAV_m \qquad (E.1)$$

E.2.6 If only the mth analytical region is used to calculate the concentration of the ith analyte, set $FRU_i = FM_m$.

E.2.7 If a number p_i of analytical regions are used to calculate the concentration of the ith analyte, set FRU_i equal to the weighted mean of the appropriate FM_m values calculated according to section E.2.5. Mathematically, if the set of analytical regions employed is $\{m'\}$, then FRU_i is given by equation E.2.

$$FRU_i = \sum_{k \in \{m'\}} W_{ik} FM_k \qquad (E.2)$$

where the W_{ik} are calculated as described in appendix D of this addendum.

Appendix F of Addendum to Method 320—Determining Fractional Calibration Uncertainties (FCU)

F.1 *General*

F.1.1 The concentrations yielded by the computerized analytical program applied to each single-compound reference spectrum are defined as the indicated standard concentrations (ISC's). The ISC values for a single compound spectrum should ideally equal the accepted standard concentration (ASC) for one analyte or interferant, and should ideally be zero for all other compounds. Variations from these results are caused by errors in the ASC values, variations from the Beer's law (or modified Beer's law) model used to determine the concentrations, and noise in the spectra. When the first two effects dominate, the systematic nature of the errors is often apparent and the analyst shall take steps to correct them.

F.1.2 When the calibration error appears non-systematic, apply the procedures of sections F.2.1 through F.2.3 of this appendix to estimate the fractional calibration uncertainty (FCU) for each compound. The FCU is defined as the mean fractional error between the ASC and the ISC for all reference spectra with non-zero ASC for that compound. The FCU for each compound shall be less than the required fractional uncertainty specified in section 4.1 of this addendum.

F.1.3 The computerized analytical programs shall also be required to yield acceptably low concentrations for compounds with ISC = 0 when applied to the reference spectra. The ISC of each reference spectrum for each analyte or interferant shall not exceed that compound's minimum measurement uncertainty (MAU or MIU).

F.2 *Calculations*

F.2.1 Apply each analytical program to each reference spectrum. Prepare a similar table to that in Figure F.1 to present the ISC and ASC values for each analyte and interferant in each reference spectrum. Maintain the order of reference file names and compounds employed in preparing Figure F.1.

F.2.2 For all reference spectra in Figure F.1, verify that the absolute values of the ISC's are less than the compound's MAU (for analytes) or MIU (for interferants).

F.2.3 For each analyte reference spectrum, calculate the quantity (ASC–ISC)/ASC. For each analyte, calculate the mean of these values (the FCU_i for the ith analyte) over all reference spectra. Prepare a similar table to that in Figure F.2 to present the FCU_i and analytical uncertainty limit (AU_i) for each analyte.

FIGURE F.1.—PRESENTATION OF ACCEPTED STANDARD CONCENTRATIONS (ASC'S) AND INDICATED STANDARD CONCENTRATIONS (ISC'S)

Compound name	Reference spectrum file name	ASC (ppm)	ISC (ppm)					
			Analytes i=1 j=1		Interferants I J			

FIGURE F.2—PRESENTATION OF FRACTIONAL CALIBRATION UNCERTAINTIES (FCU'S) AND ANALYTICAL UNCERTAINTIES (AU'S)

Analyte name	FCU (%)	AU (%)

Appendix G to Addendum to Method 320—Measuring Noise Levels

G.1 *General*

The root-mean-square (RMS) noise level is the standard measure of noise. The RMS noise level of a contiguous segment of a spectrum is the RMSD between the absorbance values that form the segment and the mean value of the segment (see appendix A of this addendum).

G.2 *Calculations*

G.2.1 Evacuate the absorption cell or fill it with UPC grade nitrogen at approximately one atmosphere total pressure.

G.2.2 Record two single beam spectra of signal integration period t_{SS}.

G.2.3 Form the double beam absorption spectrum from these two single beam spectra, and calculate the noise level RMS_{Sm} in the M analytical regions.

Appendix H of Addendum to Method 320—Determining Sample Absorption Pathlength (L_S) and Fractional Analytical Uncertainty (FAU)

H.1 *General*

Reference spectra recorded at absorption pathlength (L_R), gas pressure (P_R), and gas absolute temperature (T_R) may be used to determine analyte concentrations in samples whose spectra are recorded at conditions

different from that of the reference spectra, i.e., at absorption pathlength (L_S), absolute temperature (T_S), and pressure (P_S). This appendix describes the calculations for estimating the fractional uncertainty (FAU) of this practice. It also describes the calculations for determining the sample absorption pathlength from comparison of CTS spectra, and for preparing spectra for further instrumental and procedural checks.

H.1.1 Before sampling, determine the sample absorption pathlength using least squares analysis. Determine the ratio L_S/L_R by comparing the spectral sets {R1} and {R3}, which are recorded using the same CTS at L_S and L_R, and T_S and T_R, but both at P_R.

H.1.2 Determine the fractional analysis uncertainty (FAU) for each analyte by comparing a scaled CTS spectral set, recorded at L_S, T_S, and P_S, to the CTS reference spectra of the same gas, recorded at L_R, T_R, and P_R. Perform the quantitative comparison after recording the sample spectra, based on band areas of the spectra in the CTS absorbance band associated with each analyte.

H.2 *Calculations*

H.2.1 *Absorption Pathlength Determination.* Perform and document separate linear baseline corrections to each analytical region in the spectral sets {R1} and {R3}. Form a one-dimensional array A_R containing the absorbance values from all segments of {R1} that are associated with the analytical regions; the members of the array are A_{Ri}, i = 1, n. Form a similar one-dimensional array A_S from the absorbance values in the spectral set {R3}; the members of the array are A_{Si}, i = 1, n. Based on the model $A_S = rA_R + E$, determine the least-squares estimate of r', the value of r which minimizes the square error E^2. Calculate the sample absorption pathlength, L_S, using equation H.1.

$$L_s = r'(T_s/T_R)L_R \qquad (H.1)$$

H.2.2 *Fractional Analysis Uncertainty.* Perform and document separate linear baseline corrections to each analytical region in the spectral sets {R1} and {R4}. Form the arrays A_S and A_R as described in section H.2.1 of this appendix, using values from {R1} to form A_R, and values from {R4} to form A_S. Calculate $NRMS_E$ and IA_{AV} using equations H.2 and H.3.

$$NRMS_E = \sqrt{\sum_{i=1}^{n}\left[A_{Si} - \left(\frac{T_R}{T_S}\right)\left(\frac{L_S}{L_R}\right)\left(\frac{P_S}{P_R}\right)A_{Ri}\right]} \qquad (H.2)$$

$$IA_{AV} = \frac{1}{2}\sum_{i=1}^{n}\left[A_{Si} + \left(\frac{T_R}{T_S}\right)\left(\frac{L_S}{L_R}\right)\left(\frac{P_S}{P_R}\right)A_{Ri}\right] \qquad (H.3)$$

The fractional analytical uncertainty, FAU, is given by equation H.4.

$$FAU = \frac{NRMS_E}{IA_{AV}} \qquad (H.4)$$

Appendix I to Addendum to Method 320—Determining Fractional Model Uncertainties (FMU)

I.1 *General*

To prepare analytical programs for FTIR analyses, the sample constituents must first be assumed. The calculations in this appendix, based upon a simulation of the sample spectrum, shall be used to verify the appropriateness of these assumptions. The simulated spectra consist of the sum of single compound reference spectra scaled to represent their contributions to the sample absorbance spectrum; scaling factors are based on the indicated standard concentrations (ISC) and measured (sample) analyte and interferant concentrations, the sample and reference absorption pathlengths, and the sample and reference gas pressures. No band-shape correction for differences in the temperature of the sample and reference spectra gases is made; such errors are included in the FMU estimate. The actual and simulated sample spectra are quantitatively compared to determine the fractional model uncertainty; this comparison uses the reference spectra band areas and residuals in the difference spectrum formed from the actual and simulated sample spectra.

I.2 *Calculations*

I.2.1 For each analyte (with scaled concentration RSA_i), select a reference spectrum SA_i with indicated standard concentration ISC_i. Calculate the scaling factors, RA_i, using equation I.1.

$$RA_i = \frac{T_R\, L_S\, P_S\, RSA_i}{T_S\, L_R\, P_R\, ISC_i} \qquad (I.1)$$

Form the spectra SAC_i by scaling each SA_i by the factor RA_i.

I.2.2 For each interferant, select a reference spectrum SI_k with indicated standard concentration ISC_k. Calculate the scaling factors, RI_k, using equation I.2.

$$RI_k = \frac{T_R\, L_S\, P_S\, RSI_k}{T_S\, L_R\, P_R\, ISC_k} \qquad (I.2)$$

Form the spectra SIC_k by scaling each SI_k by the factor RI_k.

I.2.3 For each analytical region, determine by visual inspection which of the spectra SAC_i and SIC_k exhibit absorbance bands within the analytical region. Subtract each spectrum SAC_i and SIC_k exhibiting absorbance from the sample spectrum S_S to form the spectrum SUB_S. To save analysis time and to avoid the introduction of unwanted noise into the subtracted spectrum, it is recommended that the calculation be made (1) only for those spectral data points within the analytical regions, and (2) for each analytical region separately using the original spectrum S_S.

I.2.4 For each analytical region m, calculate the RMSD of SUB_S between the absorbance values and their mean in the region FFU_m to FFL_m. Denote the result by $RMSS_m$.

I.2.5 For each analyte i, calculate FM_m, using equation I.3.

$$FM_m = \frac{RMSS_m(FFU_m - FFL_m)AU_i DL_i}{AAI_i\, RSA_i} \qquad (I.3)$$

for each analytical region associated with the analyte.

I.2.6 If only the mth analytical region is used to calculate the concentration of the ith analyte, set $FMU_i = FM_m$.

I.2.7 If a number of analytical regions are used to calculate the concentration of the ith analyte, set FM_i equal to the weighted mean of the appropriate FM_m values calculated using equation I–3. Mathematically, if the set of analytical regions employed is {m'}, then the fractional model uncertainty, FMU, is given by equation I.4.

$$FMU_i = \sum_{k\in\{m'\}} W_{ik} FM_k. \qquad (I.4)$$

where W_{ik} is calculated as described in appendix D of this addendum.

Appendix J of Addendum to Method 320—Determining Overall Concentration Uncertainties (OCU)

The calculations in this addendum estimate the measurement uncertainties for various FTIR measurements. The lowest possible overall concentration uncertainty (OCU) for an analyte is its MAU value, which is an estimate of the absolute concentration uncertainty when spectral noise dominates the measurement error. However, if the product of the largest fractional concentration uncertainty (FRU, FCU, FAU, or FMU) and the measured concentration of an analyte exceeds the MAU for the analyte, then the OCU is this product. In mathematical terms, set $OFU_i = MAX\{FRU_i, FCU_i, FAU_i, FMU_i\}$ and $OCU_i = MAX\{RSA_i * OFU_i, MAU_i\}$.

Test Method 321—Measurement of Gaseous Hydrogen Chloride Emissions At Portland Cement Kilns by Fourier Transform Infrared (FTIR) Spectroscopy

1.0 *Introduction*

This method should be performed by those persons familiar with the operation of Fourier Transform Infrared (FTIR) instrumentation in the application to source sampling. This document describes the sampling procedures for use in the application of FTIR spectrometry for the determination of vapor phase hydrogen chloride (HCl) concentrations both before and after particulate matter control devices installed at portland cement kilns. A procedure for analyte spiking is included for quality assurance. This method is considered to be self validating provided that the requirements listed in section 9 of this method are followed. The analytical procedures for interpreting infrared spectra from emission measurements are described in the "Protocol For The Use of Extractive Fourier Transform Infrared (FTIR) Spectrometry in Analyses of Gaseous Emissions From Stationary Industrial Sources", included as an addendum to proposed Method 320 of this appendix (hereafter referred to as the "FTIR Protocol)". References 1 and 2 describe the use of FTIR spectrometry in field measurements. Sample transport presents the principal difficulty in directly measuring HCl emissions. This identical problem must be overcome by any extractive measurement method. HCl is reactive and water soluble. The sampling system must be adequately designed to prevent sample condensation in the system.

1.1 *Scope and Application*

This method is specifically designed for the application of FTIR Spectrometry in extractive measurements of gaseous HCl concentrations in portland cement kiln emissions.

1.2 *Applicability*

This method applies to the measurement of HCl [CAS No. 7647-01-0]. This method can be applied to the determination of HCl concentrations both before and after particulate matter control devices installed at portland cement manufacturing facilities. This method applies to either continuous flow through measurement (with isolated sample analysis) or grab sampling (batch analysis). HCl is measured using the mid-infrared spectral region for analysis (about 400 to 4000 cm^{-1} or 25 to 2.5 μm). Table 1 lists the suggested analytical region for quantification of HCl taking the interference from water vapor into consideration.

TABLE 1.—EXAMPLE ANALYTICAL REGION FOR HCL

Compound	Analytical region (cm^{-1})	Potential interferants
Hydrogen chloride	2679–2840	Water.

1.3 *Method Range and Sensitivity*

1.3.1 The analytical range is determined by the instrumental design and the composition of the gas stream. For practical purposes there is no upper limit to the range because the pathlength may be reduced or the sample may be diluted. The lower detection range depends on (1) the absorption coefficient of the compound in the analytical frequency region, (2) the spectral resolution, (3) the interferometer sampling time, (4) the detector sensitivity and response, and (5) the absorption pathlength.

1.3.2 The practical lower quantification range is usually higher than the instrument sensitivity allows and is dependent upon (1) the presence of interfering species in the exhaust gas including H_2O, CO_2, and SO_2, (2) analyte losses in the sampling system, (3) the optical alignment of the gas cell and transfer optics, and (4) the quality of the reflective surfaces in the cell (cell throughput). Under typical test conditions (moisture content of up to 30% and CO_2 concentrations from 1 to 15 percent), a 22 meter path length cell with a suitable sampling system may achieve a lower quantification range of from 1 to 5 ppm for HCl.

1.4 *Data Quality Objectives*

1.4.1 In designing or configuring the analytical system, data quality is determined by measuring of the root mean square deviation (RMSD) of the absorbance values within a chosen spectral (analytical) region. The RMSD provides an indication of the signal-to-noise ratio (S/N) of the spectral baseline. Appendix D of the FTIR Protocol (the addendum to Method 320 of this appendix) presents a discussion of the relationship between the RMSD, lower detection limit, DL_i, and analytical uncertainty, AU_i. It is important to consider the target analyte quantification limit when performing testing with FTIR instrumentation, and to optimize the system to achieve the desired detection limit.

1.4.2 Data quality is determined by measuring the root mean square (RMS) noise level in each analytical spectral region (appendix C of the FTIR Protocol). The RMS noise is defined as the root mean square deviation (RMSD) of the absorbance values in an analytical region from the mean absorbance value in the same region. Appendix D of the *FTIR Protocol* defines the minimum analyte uncertainty (MAU), and how the RMSD is used to calculate the MAU. The MAU_{im} is the minimum concentration of the ith analyte in the mth analytical region for which the analytical uncertainty limit can be maintained. Table 2 presents example values of AU and MAU using the analytical region presented in Table 1.

TABLE 2.—EXAMPLE PRE-TEST PROTOCOL CALCULATIONS FOR HYDROGEN CHLORIDE

	HCl
Reference concentration (ppm-meters)/K	11.2
Reference Band area	2.881

TABLE 2.—EXAMPLE PRE-TEST PROTOCOL CALCULATIONS FOR HYDROGEN CHLORIDE—Continued

	HCl
DL (ppm-meters)/K	0.1117
AU	0.2
CL (DL × AU)	0.02234
FL (cm^{-1})	2679.83
FU (cm^{-1})	2840.93
FC (cm^{-1})	2760.38
AAI (ppm-meters)/K	0.06435
RMSD	2.28E–03
MAU (ppm-meters)/K	1.28E–01
MAU ppm at 22 meters and 250 °F	.0.2284

2.0 *Summary of Method*

2.1 *Principle*

See Method 320 of this appendix. HCl can also undergo rotation transitions by absorbing energy in the far-infrared spectral region. The rotational transitions are superimposed on the vibrational fundamental to give a series of lines centered at the fundamental vibrational frequency, 2885 cm^{-1}. The frequencies of absorbance and the pattern of rotational/vibrational lines are unique to HCl. When this distinct pattern is observed in an infrared spectrum of an unknown sample, it unequivocally identifies HCl as a component of the mixture. The infrared spectrum of HCl is very distinctive and cannot be confused with the spectrum of any other compound. See Reference 6.

2.2 *Sampling and Analysis.* See Method 320 of this appendix.

2.3 *Operator Requirements.* The analyst must have knowledge of spectral patterns to choose an appropriate absorption path length or determine if sample dilution is necessary. The analyst should also understand FTIR instrument operation well enough to choose instrument settings that are consistent with the objectives of the analysis.

3.0 *Definitions*

See appendix A of the FTIR Protocol.

4.0 *Interferences*

This method will not measure HCl under conditions: (1) where the sample gas stream can condense in the sampling system or the instrumentation, or (2) where a high moisture content sample relative to the analyte concentrations imparts spectral interference due to the water vapor absorbance bands. For measuring HCl the first (sampling) consideration is more critical. Spectral interference from water vapor is not a significant problem except at very high moisture levels and low HCl concentrations.

4.1 *Analytical Interferences.* See Method 320 of this appendix.

4.1.1 *Background Interferences.* See Method 320 of this appendix.

4.1.2 *Spectral interferences.* Water vapor can present spectral interference for FTIR gas analysis of HCl. Therefore, the water vapor in the spectra of kiln gas samples must be accounted for. This means preparing at least one spectrum of a water vapor sample where the moisture concentration is close to that in the kiln gas.

4.2 *Sampling System Interferences.* The principal sampling system interferant for measuring HCl is water vapor. Steps must be taken to ensure that no condensation forms anywhere in the probe assembly, sample lines, or analytical instrumentation. Cold spots anywhere in the sampling system must be avoided. The extent of sampling system bias in the FTIR analysis of HCl depends on concentrations of potential interferants, moisture content of the gas stream, temperature of the gas stream, temperature of sampling system components, sample flow rate, and reactivity of HCl with other species in the gas stream (e.g., ammonia). For measuring HCl in a wet gas stream the temperatures of the gas stream, sampling components, and the sample flow rate are of primary importance. Analyte spiking with HCl is performed to demonstrate the integrity of the sampling system for transporting HCl vapor in the flue gas to the FTIR instrument. See section 9 of this method for a complete description of analyte spiking.

5.0 *Safety*

5.1 Hydrogen chloride vapor is corrosive and can cause irritation or severe damage to respiratory system, eyes and skin. Exposure to this compound should be avoided.

5.2 This method may involve sampling at locations having high positive or negative pressures, or high concentrations of hazardous or toxic pollutants, and can not address all safety problems encountered under these diverse sampling conditions. It is the responsibility of the tester(s) to ensure proper safety and health practices, and to determine the applicability of regulatory limitations before performing this test method. Leak-check procedures are outlined in section 8.2 of Method 320 of this appendix.

6.0 *Equipment and Supplies*

Note: Mention of trade names or specific products does not constitute endorsement by the Environmental Protection Agency.

6.1 *FTIR Spectrometer and Detector.* An FTIR Spectrometer system (interferometer, transfer optics, gas cell and detector) having the capability of measuring HCl to the predetermined minimum detectable level required (see section 4.1.3 of the FTIR Protocol). The system must also include an accurate means to control and/or measure the temperature of the FTIR gas analysis cell, and a personal computer with compatible software that provides real-time updates of the spectral profile during sample and spectral collection.

6.2 *Pump.* Capable of evacuating the FTIR cell volume to 1 Torr (133.3 Pascals) within two minutes (for batch sample analysis).

6.3 *Mass Flow Meters/Controllers.* To accurately measure analyte spike flow rate, having the appropriate calibrated range and a stated accuracy of ±2 percent of the absolute measurement value. This device must be calibrated with the major component of the calibration/spike gas (e.g., nitrogen) using an NIST traceable bubble meter or equivalent. Single point calibration checks should be performed daily in the field. When spiking HCl, the mass flow meter/controller should be thoroughly purged before and after introduction of the gas to prevent corrosion of the interior parts.

6.4 *Polytetrafluoroethane tubing.* Diameter and length suitable to connect cylinder regulators.

6.5 *Stainless Steel tubing.* Type 316 of appropriate length and diameter for heated connections.

6.6 *Gas Regulators.* Purgeable HCl regulator.

6.7 *Pressure Gauge.* Capable of measuring pressure from 0 to 1000 Torr (133.3 Pa=1 Torr) within ±5 percent.

6.8 *Sampling Probe.* Glass, stainless steel or other appropriate material of sufficient length and physical integrity to sustain heating, prevent adsorption of analytes and capable of reaching gas sampling point.

6.9 *Sampling Line.* Heated 180 °C (360 °F) and fabricated of either stainless steel, polytetrafluoroethane or other material that prevents adsorption of HCl and transports effluent to analytical instrumentation. The extractive sample line must have the capability to transport sample gas to the analytical components as well as direct heated calibration spike gas to the calibration assembly located at the sample probe. It is important to minimize the length of heated sample line.

6.10 *Particulate Filters.* A sintered stainless steel filter rated at 20 microns or greater may be placed at the inlet of the probe (for removal of large particulate matter). A heated filter (Balston® or equivalent) rated at 1 micron is necessary for primary particulate matter removal, and shall be placed immediately after the heated probe. The filter/filter holder temperature should be maintained at 180 °C (360 °F).

6.11 *Calibration/Analyte Spike Assembly.* A heated three-way valve assembly (or equivalent) to introduce surrogate spikes into the sampling system at the outlet of the probe before the primary particulate filter.

6.12 *Sample Extraction Pump.* A leak-free heated head pump (KNF® Neuberger or equivalent) capable of extracting sample effluent through entire sampling system at a rate which prevents analyte losses and minimizes analyzer response time. The pump should have a heated by-pass and may be placed either before the FTIR instrument or after. If the sample pump is located upstream of the FTIR instrument, it must be fabricated from materials non-reactive to HCl. The sampling system and FTIR measurement system shall allow the operator to obtain at least six sample spectra during a one-hour period.

6.13 *Barometer.* For measurement of barometric pressure.

6.14 *Gas Sample Manifold.* A distribution manifold having the capabilities listed in sections 6.14.1 through 6.14.4:

6.14.1 Delivery of calibration gas directly to the analytical instrumentation:

6.14.2 Delivery of calibration gas to the sample probe (system calibration or analyte spike) via a heated traced sample line;

6.14.3 Delivery of sample gas (kiln gas, spiked kiln gas, or system calibrations) to the analytical instrumentation;

6.14.4 Delivery (optional) of a humidified nitrogen sample stream.

6.15 *Flow Measurement Device.* Type S Pitot tube (or equivalent) and Magnahelic® set for measurement of volumetric flow rate.

7.0 *Reagents and Standards*

HCl can be purchased in a standard compressed gas cylinder. The most stable HCl cylinder mixture available has a concentration certified at ±5 percent. Such a cylinder is suitable for performing analyte spiking because it will provide reproducible samples. The stability of the cylinder can be monitored over time by periodically performing direct FTIR analysis of cylinder samples. It is recommended that a 10–50 ppm cylinder of HCl be prepared having from 2–5 ppm SF6 as a tracer compound. (See sections 7.1 through 7.3 of Method 320 of this appendix for a complete description of the use of existing HCl reference spectra. See section 9.1 of Method 320 of this appendix for a complete discussion of standard concentration selection.)

8.0 *Sample Collection, Preservation and Storage*

See also Method 320 of this appendix.

8.1 *Pretest.* A screening test is ideal for obtaining proper data that can be used for preparing analytical program files. Information from literature surveys and source personnel is also acceptable. Information about the sampling location and gas stream composition is required to determine the optimum sampling system configuration for measuring HCl. Determine the percent moisture of the kiln gas by Method 4 of appendix A to part 60 of this chapter or by performing a wet bulb/dry bulb measurement. Perform a preliminary traverse

of the sample duct or stack and select the sampling point(s). Acquire an initial spectrum and determine the optimum operational pathlength of the instrument.

8.2 *Leak-Check.* See Method 320 of this appendix, section 8.2 for direction on performing leak-checks.

8.3 *Background Spectrum.* See Method 320 of this appendix, section 8.5 for direction in background spectral acquisition.

8.4 *Pre-Test Calibration Transfer Standard (Direct Instrument Calibration).* See Method 320 of this appendix, section 8.3 for direction in CTS spectral acquisition.

8.5 *Pre-Test System Calibration.* See Method 320 of this appendix, sections 8.6.1 through 8.6.2 for direction in performing system calibration.

8.6 *Sampling*

8.6.1 *Extractive System.* An extractive system maintained at 180 °C (360 °F) or higher which is capable of directing a total flow of at least 12 L/min to the sample cell is required (References 1 and 2). Insert the probe into the duct or stack at a point representing the average volumetric flow rate and 25 percent of the cross sectional area. Co-locate an appropriate flow monitoring device with the sample probe so that the flow rate is recorded at specified time intervals during emission testing (e.g., differential pressure measurements taken every 10 minutes during each run).

8.6.2 *Batch Samples.* Evacuate the absorbance cell to 5 Torr (or less) absolute pressure before taking first sample. Fill the cell with kiln gas to ambient pressure and record the infrared spectrum, then evacuate the cell until there is no further evidence of infrared absorption. Repeat this procedure, collecting a total of six separate sample spectra within a 1-hour period.

8.6.3 *Continuous Flow Through Sampling.* Purge the FTIR cell with kiln gas for a time period sufficient to equilibrate the entire sampling system and FTIR gas cell. The time required is a function of the mechanical response time of the system (determined by performing the system calibration with the CTS gas or equivalent), and by the chemical reactivity of the target analytes. If the effluent target analyte concentration is not variable, observation of the spectral up-date of the flowing gas sample should be performed until equilibration of the sample is achieved. Isolate the gas cell from the sample flow by directing the purge flow to vent. Record the spectrum and pressure of the sample gas. After spectral acquisition, allow the sample gas to purge the cell with at least three volumes of kiln gas. The time required to adequately purge the cell with the required volume of gas is a function of (1) cell volume, (2) flow rate through the cell, and (3) cell design. It is important that the gas introduction and vent for the FTIR cell provides a complete purge through the cell.

8.6.4 *Continuous Sampling.* In some cases it is possible to collect spectra continuously while the FTIR cell is purged with sample gas. The sample integration time, t_{ss}, the sample flow rate through the gas cell, and the sample integration time must be chosen so that the collected data consist of at least 10 spectra with each spectrum being of a separate cell volume of flue gas. Sampling in this manner may only be performed if the native source analyte concentrations do not affect the test results.

8.7 *Sample Conditioning*

8.7.1 *High Moisture Sampling.* Kiln gas emitted from wet process cement kilns may contain 3- to 40 percent moisture. Zinc selenide windows or the equivalent should be used when attempting to analyze hot/wet kiln gas under these conditions to prevent dissolution of water soluble window materials (e.g., KBr).

8.7.2 *Sample Dilution.* The sample may be diluted using an in-stack dilution probe, or an external dilution device provided that the sample is not diluted below the instrument's quantification range. As an alternative to using a dilution probe, nitrogen may be dynamically spiked into the effluent stream in the same manner as analyte spiking. A constant dilution rate shall be maintained throughout the measurement process. It is critical to measure and verify the exact dilution ratio when using a dilution probe or the nitrogen spiking approach. Calibrating the system with a calibration gas containing an appropriate tracer compound will allow determination of the dilution ratio for most measurement systems. The tester shall specify the procedures used to determine the dilution ratio, and include these calibration results in the report.

8.8 *Sampling QA, Data Storage and Reporting.* See the FTIR Protocol. Sample integration times shall be sufficient to achieve the required signal-to-noise ratio, and all sample spectra should have unique file names. Two copies of sample interferograms and processed spectra will be stored on separate computer media. For each sample spectrum the analyst must document the sampling conditions, the sampling time (while the cell was being filled), the time the spectrum was recorded, the instrumental conditions (path length, temperature, pressure, resolution, integration time), and the spectral file name. A hard copy of these data must be maintained until the test results are accepted.

8.9 *Signal Transmittance.* Monitor the signal transmittance through the instrumental system. If signal transmittance (relative to the background) drops below 95 percent in any spectral region where the sample does not absorb infrared energy, then a new background spectrum must be obtained.

8.10 *Post-test CTS.* After the sampling run completion, record the CTS spectrum. Analysis of the spectral band area used for quantification from pre- and post-test CTS spectra should agree to within ±5 percent or corrective action must be taken.

8.11 *Post-test QA.* The sample spectra shall be inspected immediately after the run to verify that the gas matrix composition was close to the assumed gas matrix, (this is necessary to account for the concentrations of the interferants for use in the analytical analysis programs), and to confirm that the sampling and instrumental parameters were appropriate for the conditions encountered.

9.0 *Quality Control*

Use analyte spiking to verify the effectiveness of the sampling system for the target compounds in the actual kiln gas matrix. QA spiking shall be performed before and after each sample run. QA spiking shall be performed after the pre- and post-test CTS direct and system calibrations. The system biases calculated from the pre- and post-test dynamic analyte spiking shall be within ±30 percent for the spiked surrogate analytes for the measurements to be considered valid. See sections 9.3.1 through 9.3.2 for the requisite calculations. Measurement of the undiluted spike (direct-to-cell measurement) involves sending dry, spike gas to the FTIR cell, filling the cell to 1 atmosphere and obtaining the spectrum of this sample. The direct-to-cell measurement should be performed before each analyte spike so that the recovery of the dynamically spiked analytes may be calculated. Analyte spiking is only effective for assessing the integrity of the sampling system when the concentration of HCl in the source does not vary substantially. Any attempt to quantify an analyte recovery in a variable concentration matrix will result in errors in the expected concentration of the spiked sample. If the kiln gas target analyte concentrations vary by more than ±5 percent (or 5 ppm, whichever is greater) in the time required to acquire a sample spectrum, it may be necessary to: (1) Use a dual sample probe approach, (2) use two independent FTIR measurement systems, (3) use alternate QA/QC procedures, or (4) postpone testing until stable emission concentrations are achieved. (See section 9.2.3 of this method). It is recommended that a laboratory evaluation be performed before attempting to employ this method under actual field conditions. The laboratory evaluation shall include (1) performance of all applicable calculations in section 4 of the FTIR Protocol; (2) simulated analyte spiking experiments in dry (ambient) and humidified sample matrices using HCl; and (3) performance of bias (recovery) calculations from analyte spiking experiments. It is not necessary to perform a laboratory evaluation before every field test. The purpose of the laboratory study is to demonstrate that the actual instrument and sampling system configuration used in field testing meets the requirements set forth in this method.

9.1 *Spike Materials.* Perform analyte spiking with an HCl standard to demonstrate the integrity of the sampling system.

9.1.1 An HCl standard of approximately 50 ppm in a balance of ultra pure nitrogen is recommended. The SF_6 (tracer) concentration shall be 2 to 5 ppm depending upon the measurement pathlength. The spike ratio (spike flow/total flow) shall be no greater than 1:10, and an ideal spike concentration should approximate the native effluent concentration.

9.1.2 The ideal spike concentration may not be achieved because the target concentration cannot be accurately predicted prior to the field test, and limited calibration standards will be available during testing. Therefore, practical constraints must be applied that allow the tester to spike at an anticipated concentration. For these tests, the analyte concentration contributed by the HCl standard spike should be 1 to 5 ppm or should more closely approximate the native concentration if it is greater.

9.2 *Spike Procedure*

9.2.1 A spiking/sampling apparatus is shown in Figure 2. Introduce the spike/tracer gas mixture at a constant flow (±2 percent) rate at approximately 10 percent of the total sample flow. (For example, introduce the surrogate spike at 1 L/min 20 cc/min, into a total sample flow rate of 10 L/min). The spike must be pre-heated before introduction into the sample matrix to prevent a localized condensation of the gas stream at the spike introduction point. A heated sample transport line(s) containing multiple transport tubes within the heated bundle may be used to spike gas up through the sampling system to the spike introduction point. Use a calibrated flow device (e.g., mass flow meter/controller), to monitor the spike flow as indicated by a calibrated flow meter or controller, or alternately, the SF_6 tracer ratio may be calculated from the direct measurement and the diluted measurement. It is often desirable to use the tracer approach in calculating the spike/total flow ratio because of the difficulty in accurately measuring hot/wet total flow. The tracer technique has been successfully used in past validation efforts (Reference 1).

9.2.2 Perform a direct-to-cell measurement of the dry, undiluted spike gas. Introduce the spike directly to the FTIR cell, bypassing the sampling system. Fill cell to 1 atmosphere and collect the spectrum of this sample. Ensure that the spike gas has equilibrated to the temperature of the measurement cell before acquisition of the spectra. Inspect the spectrum and verify that the gas is dry and contains negligible CO_2. Repeat the process to obtain a second direct-to-cell measurement. Analysis of spectral band areas for HCl from these duplicate measurements should agree to within ±5 percent of the mean.

9.2.3 *Analyte Spiking.* Determine whether the kiln gas contains native concentrations of HCl by examination of preliminary spectra. Determine whether the concentration varies significantly with time by observing a continuously up-dated spectrum of sample gas in the flow-through sampling mode. If the concentration varies by more than ±5 percent during the period of time required to acquire a spectra, then an alternate approach should be used. One alternate approach uses two sampling lines to convey sample to the gas distribution manifold. One of the sample lines is used to continuously extract unspiked kiln gas from the source. The other sample line serves as the analyte spike line. One FTIR system can be used in this arrangement. Spiked or unspiked sample gas may be directed to the FTIR system from the gas distribution manifold, with the need to purge only the components between the manifold and the FTIR system. This approach minimizes the time required to acquire an equilibrated sample of spiked or unspiked kiln gas. If the source varies by more than ±5 percent (or 5 ppm, whichever is greater) in the time it takes to switch from the unspiked sample line to the spiked sample line, then analyte spiking may not be a feasible means to determine the effectiveness of the sampling system for the HCl in the sample matrix. A second alternative is to use two completely independent FTIR measurement systems. One system would measure unspiked samples while the other system would measure the spiked samples. As a last option, (where no other alternatives can be used) a humidified nitrogen stream may be generated in the field which approximates the moisture content of the kiln gas. Analyte spiking into this humidified stream can be employed to assure that the sampling system is adequate for transporting the HCl to the FTIR instrumentation.

9.2.3.1 Adjust the spike flow rate to approximately 10 percent of the total flow by metering spike gas through a calibrated mass flowmeter or controller. Allow spike flow to equilibrate within the sampling system before analyzing the first spiked kiln gas samples. A minimum of two consecutive spikes are required. Analysis of the spectral band area used for quantification should agree to within ±5 percent or corrective action must be taken.

9.2.3.2 After QA spiking is completed, the sampling system components shall be purged with nitrogen or dry air to eliminate traces of the HCl compound from the sampling system components. Acquire a sample spectra of the nitrogen purge to verify the absence of the calibration mixture.

9.2.3.3 Analyte spiking procedures must be carefully executed to ensure that meaningful measurements are achieved. The requirements of sections 9.2.3.3.1 through 9.2.3.3.4 shall be met.

9.2.3.3.1 The spike must be in the vapor phase, dry, and heated to (or above) the kiln gas temperature before it is introduced to the kiln gas stream.

9.2.3.3.2 The spike flow rate must be constant and accurately measured.

9.2.3.3.3 The total flow must also be measured continuously and reliably or the dilution ratio must otherwise be verified before and after a run by introducing a spike of a non-reactive, stable compound (i.e., tracer).

9.2.3.3.4 The tracer must be inert to the sampling system components, not contained in the effluent gas, and readily detected by the analytical instrumentation. Sulfur hexafluoride (SF_6) has been used successfully (References 1 and 2) for this purpose.

9.3 *Calculations*

9.3.1 *Recovery.* Calculate the percent recovery of the spiked analytes using equations 1 and 2.

$$\%R = 100 \times \frac{S_m - S_u(1 - DF)}{DF \times C_s} \qquad (1)$$

S_m = Mean concentration of the analyte spiked effluent samples (observed).

$$C_e = DF \times C_s + S_u(1 - DF) \qquad (2)$$

C_e = Expected concentration of the spiked samples (theoretical).

D_f = dilution Factor (Total flow/Spike flow), total flow = spike flow plus effluent flow.

C_s = cylinder concentration of spike gas.

S_u = native concentration of analytes in unspiked samples.

The spike dilution factor may be confirmed by measuring the total flow and the spike flow directly. Alternately, the spike dilution can be verified by comparing the concentration of the tracer compound in the spiked samples (diluted) to the tracer concentration in the direct (undiluted) measurement of the spike gas.

If SF_6 is the tracer gas, then

$$D_f = [SF_6]_{spike} / [SF_6]_{direct} \qquad (3)$$

$[SF_6]_{spike}$ = the diluted SF_6 concentration measured in a spiked sample.

$[SF_6]_{direct}$ = the SF_6 concentration measured directly.

9.3.2 Bias. The bias may be determined by the difference between the observed spike value and the expected response (i.e., the equivalent concentration of the spiked material plus the analyte concentration adjusted for spike dilution). Bias is defined by section 6.3.1 of EPA Method 301 of this appendix (Reference 8) as.

$$B = S_m - C_e \qquad (4)$$

Where:

B = Bias at spike level.

S_m = Mean concentration of the analyte spiked samples.

C_e = Expected concentration of the analyte in spiked samples.

Acceptable recoveries for analyte spiking are ±30 percent. Application of correction factors to the data based upon bias and recovery calculations is subject to the approval of the Administrator.

10.0 *Calibration and Standardization*

10.1 *Calibration transfer standards (CTS).* The EPA Traceability Protocol gases or NIST traceable standards, with a minimum accuracy of ±2 percent shall be used. For other requirements of the CTS, see the FTIR Protocol section 4.5.

10.2 *Signal-to-Noise Ratio (S/N).* The S/N shall be less than the minimum acceptable measurement uncertainty in the analytical regions to be used for measuring HCl.

10.3 *Absorbance Pathlength.* Verify the absorbance path length by comparing CTS spectra to reference spectra of the calibration gas(es).

10.4 *Instrument Resolution.* Measure the line width of appropriate CTS band(s) to verify instrumental resolution.

10.5 *Apodization Function.* Choose the appropriate apodization function. Determine any appropriate mathematical transformations that are required to correct instrumental errors by measuring the CTS. Any mathematical transformations must be documented and reproducible. Reference 9 provides additional information about FTIR instrumentation.

11.0 *Analytical Procedure*

A full description of the analytical procedures is given in sections 4.6–4.11, sections 5, 6, and 7, and the appendices of the FTIR Protocol. Additional description of quantitative spectral analysis is provided in References 10 and 11.

12.0 *Data Analysis and Calculations*

Data analysis is performed using appropriate reference spectra whose concentrations can be verified using CTS spectra. Various analytical programs (References 10 and 11) are available to relate sample absorbance to a concentration standard. Calculated concentrations should be verified by analyzing spectral baselines after mathematically subtracting scaled reference spectra from the sample spectra. A full description of the data analysis and calculations may be found in the FTIR Protocol (sections 4.0, 5.0, 6.0 and appendices).

12.1 Calculated concentrations in sample spectra are corrected for differences in absorption pathlength between the reference and sample spectra by

$$C_{corr} = (L_r/L_s) \times (T_s/T_r) \times (C_{calc}) \qquad (5)$$

Where:

C_{corr} = The pathlength corrected concentration.

C_{calc} = The initial calculated concentration (output of the multicomponent analysis program designed for the compound).

L_r = The pathlength associated with the reference spectra.

L_s = The pathlength associated with the sample spectra.

T_s = The absolute temperature (K) of the sample gas.

T_r = The absolute temperature (K) at which reference spectra were recorded.

12.2 The temperature correction in equation 5 is a volumetric correction. It does not account for temperature dependence of rotational-vibrational relative line intensities. Whenever possible, the reference spectra used in the analysis should be collected at a temperature near the temperature of the FTIR cell used in the test to minimize the calculated error in the measurement (FTIR Protocol, appendix D). Additionally, the analytical region chosen for the analysis should be sufficiently broad to minimize errors caused by small differences in relative line intensities between reference spectra and the sample spectra.

13.0 *Method Performance*

A description of the method performance may be found in the FTIR Protocol. This method is self validating provided the results meet the performance specification of the QA spike in sections 9.0 through 9.3 of this method.

14.0 *Pollution Prevention*

This is a gas phase measurement. Gas is extracted from the source, analyzed by the instrumentation, and discharged through the instrument vent.

15.0 *Waste Management*

Gas standards of HCl are handled according to the instructions enclosed with the material safety data sheet.

16.0 *References*

1. "Laboratory and Field Evaluation of a Methodology for Determination of Hydrogen Chloride Emissions From Municipal and Hazardous Waste Incinerators," S.C. Steinsberger and J.H. Margeson. Prepared for U.S. Environmental Protection Agency. Research Triangle Park, NC. NTIS Report No. PB89-220586. (1989).

2. "Evaluation of HCl Measurement Techniques at Municipal and Hazardous Waste Incinerators," S.A. Shanklin, S.C. Steinsberger, and L. Cone, Entropy, Inc. Prepared for U.S. Environmental Protection Agency, Research Triangle Park, NC. NTIS Report No. PB90-221896. (1989).

3. "Fourier Transform Infrared (FTIR) Method Validation at a Coal Fired-Boiler," Entropy, Inc. Prepared for U.S. Environmental Protection Agency, Research Triangle Park, NC. EPA Publication No. EPA-454/R95-004. NTIS Report No. PB95-193199. (1993).

4. "Field Validation Test Using Fourier Transform Infrared (FTIR) Spectrometry To Measure Formaldehyde, Phenol and Methanol at a Wool Fiberglass Production Facility." Draft. U.S. Environmental Protection Agency Report, Entropy, Inc., EPA Contract No. 68D20163, Work Assignment I-32.

5. Kinner, L.L., Geyer, T.G., Plummer, G.W., Dunder, T.A., Entropy, Inc. "Application of FTIR as a Continuous Emission Monitoring System." Presentation at 1994 International Incineration Conference, Houston, TX. May 10, 1994.

6. "Molecular Vibrations; The Theory of Infrared and Raman Vibrational Spectra," E. Bright Wilson, J.C. Decius, and P.C. Cross, Dover Publications, Inc., 1980. For a less intensive treatment of molecular rotational-vibrational spectra see, for example, "Physical Chemistry," G.M. Barrow, chapters 12, 13, and 14, McGraw Hill, Inc., 1979.

7. "Laboratory and Field Evaluations of Ammonium Chloride Interference in Method 26," U.S. Environmental Protection Agency Report, Entropy, Inc., EPA Contract No. 68D20163, Work Assignment No. I-45.

8. 40 CFR 63, appendix A, Method 301—Field Validation of Pollutant Measurement Methods from Various Waste Media.

9. "Fourier Transform Infrared Spectrometry," Peter R. Griffiths and James de Haseth, Chemical Analysis, 83, 16-25, (1986), P.J. Elving, J.D. Winefordner and I.M. Kolthoff (ed.), John Wiley and Sons.

10. "Computer-Assisted Quantitative Infrared Spectroscopy," Gregory L. McClure (ed.), ASTM Special Publication 934 (ASTM), 1987.

11. "Multivariate Least-Squares Methods Applied to the Quantitative Spectral Analysis of Multicomponent Mixtures," Applied Spectroscopy, 39(10), 73-84, 1985.

BILLING CODE 6560-50-P

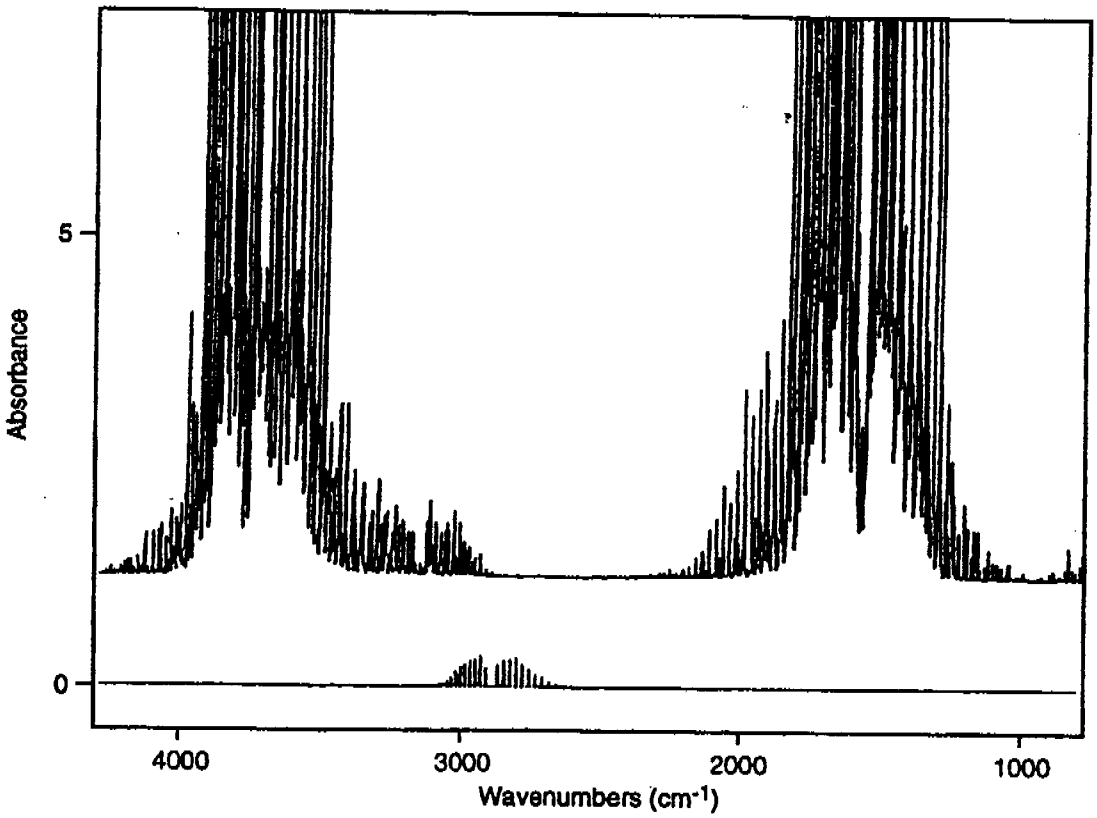

Top, water vapor (194hsub); Bottom, HCl at 11.4 (ppm-M)/K.

Figure 1. FTIR Spectra of HCl and Water.

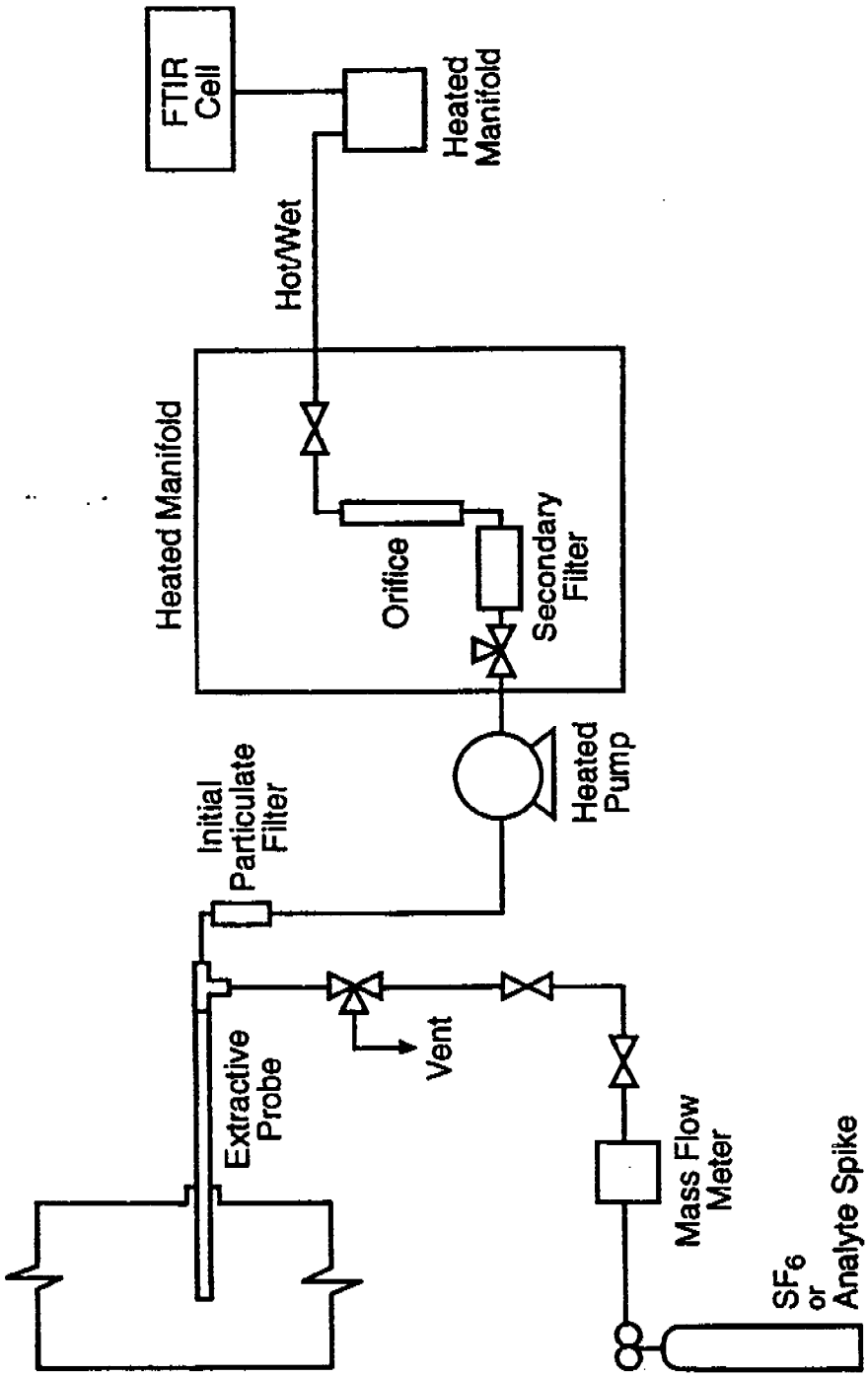

Figure 2. FTIR Sampling/Spiking System.

[FR Doc. 99-12893 Filed 6-11-99; 8:45 am]
BILLING CODE 6560-50-C

ENVIRONMENTAL PROTECTION AGENCY

40 CFR Part 63

[AD–FRL–6346–8]

RIN 2060–AE34

National Emission Standards for Hazardous Air Pollutants: Oil and Natural Gas Production and National Emission Standards for Hazardous Air Pollutants: Natural Gas Transmission and Storage

AGENCY: Environmental Protection Agency (EPA).

ACTION: Final rules.

SUMMARY: These promulgated national emission standards for hazardous air pollutants (NESHAP) limit emissions of hazardous air pollutants (HAP) from oil and natural gas production and natural gas transmission and storage facilities. These final rules implement section 112 of the Clean Air Act (Act) and are based on the Administrator's determination that oil and natural gas production and natural gas transmission and storage facilities emit HAP identified on the EPA's list of 188 HAP.

The EPA estimates that approximately 69,000 megagrams per year (Mg/yr) of HAP are emitted from facilities in these source categories. The primary HAP emitted by the facilities covered by these final standards include benzene, toluene, ethyl benzene, mixed xylenes (collectively referred to as BTEX), and n-hexane. Benzene is carcinogenic and has also been shown to cause various adverse health effects other than cancer (i.e., noncancer effects). The other four HAP are not classified as carcinogens based on available information; however, exposures to these four HAP have been shown to cause various noncancer effects.

The EPA estimates that these promulgated NESHAP will reduce HAP emissions from major sources in the oil and natural gas production source category by 77 percent and from major sources in the natural gas transmission and storage source category by 95.0 percent.

EFFECTIVE DATE: This regulation is effective June 17, 1999. See **SUPPLEMENTARY INFORMATION** concerning judicial review.

ADDRESSES: *Docket.* A docket, No. A–94–04, containing information considered by the EPA in developing the promulgated standards for the oil and natural gas production and natural gas transmission and storage source categories, is available for public inspection between 8:00 a.m. and 5:30 p.m., Monday through Friday (except for Federal holidays) at the following address: U.S. Environmental Protection Agency, Air and Radiation Docket and Information Center (MC–6102), 401 M Street SW., Washington DC 20460, telephone: (202) 260–7548. The docket is located at the above address in Room M–1500, Waterside Mall. The promulgated regulations, background information document (BID) volumes 1 and 2, and other supporting information are available for inspection and copying. A reasonable fee may be charged for copying.

Responses to Comments Document. The responses to comments document for the promulgated standards may be obtained from the EPA Library (MD–35), Research Triangle Park, North Carolina 27711, telephone (919) 541–2777, or from the National Technical Information Services, 5285 Port Royal Road, Springfield, Virginia 22151, telephone (703) 605–6000 or (800) 553–6847 or via the Internet at www.fedworld.gov/ntis/ntishome.html. Please refer to "National Emissions Standards for Hazardous Air Pollutants for Source Categories: Oil and Natural Gas Production and Natural Gas Transmission and Storage—Background Information for Final Standards: Summary of Public Comments and Responses" (EPA–453/R–99–004b, May 1999). The document contains the following: (1) a summary of all the public comments made on the proposed standards and the Administrator's responses to the comments and (2) a summary of the changes made to the standards since proposal. This document is also available for downloading from the Technology Transfer Network (see **SUPPLEMENTARY INFORMATION**).

FOR FURTHER INFORMATION CONTACT: For information concerning today's action, contact Mr. Greg Nizich, Waste and Chemical Processes Group (MD–13), U.S. Environmental Protection Agency, Research Triangle Park, North Carolina 27711; telephone: (919) 541–3078; facsimile: (919) 541–0246; or electronically at: nizich.greg@epa.gov.

SUPPLEMENTARY INFORMATION: *Regulated Entities.* Regulated categories and entities include:

Category	Examples of regulated entities
Industry	Condensate tank batteries, glycol dehydration units, natural gas processing plants, and natural gas transmission and storage facilities.

This table is not intended to be exhaustive, but rather provides a guide for readers regarding entities likely to be regulated by these actions. This table lists the types of entities that the EPA is now aware could potentially be regulated by these actions. Other types of entities not listed in the table could also be regulated. To determine whether your facility is regulated by these actions, you should carefully examine the applicability criteria in sections 63.760 and 63.1270 of the rules. If you have questions regarding the applicability of these actions to a particular entity, consult the person listed in the preceding **FOR FURTHER INFORMATION CONTACT** section.

Technology Transfer Network. This document, the final regulatory texts, and BID volumes 1 and 2 are available in Docket No. A–94–04 from the EPA's Air and Radiation Docket and Information Center (see **ADDRESSES**). They can also be accessed through the EPA's Technology Transfer Network (TTN) Internet web site at: http://www.epa.gov/ttn/oarpg.

Judicial Review. National emission standards for hazardous air pollutants for facilities in the oil and natural gas production and natural gas transmission and storage source categories were proposed in the **Federal Register** on February 6, 1998 (63 FR 6288). This **Federal Register** action announces the EPA's final decisions on the rules. Under section 307(b)(1) of the Act, judicial review of the NESHAP is available only by filing a petition for review in the U.S. Court of Appeals for the District of Columbia Circuit within 60 days of today's publication of these final rules. Under section 307(b)(2) of the Act, the requirements that are the subject of today's action may not be challenged later in civil or criminal proceedings brought by the EPA to enforce these requirements.

Preamble Outline. The following outline is provided to aid in reading the preamble to the promulgated oil and natural gas production and natural gas transmission and storage NESHAP.

I. Background
II. Summary of Considerations in Developing the Rules
  A. Purpose of the Regulations
  B. Technical Basis of the Regulations
  C. Stakeholder and Public Participation
III. Summary of Promulgated Standards
  A. Promulgated Standards for Oil and Natural Gas Production for Major Sources
  B. Promulgated Standards for Natural Gas Transmission and Storage for Major Sources
  C. Recordkeeping and Reporting Provisions
IV. Summary of Impacts
  A. HAP Emission Reductions
  B. Secondary Environmental Impacts
  C. Energy Impacts
  D. Cost Impacts

E. Economic Impacts
V. Significant Comments and Changes to the Proposed Standards
A. Definition of Facility
B. Definition of "Associated Equipment"
C. Applicability
D. Glycol Dehydration Unit Process Vent Standards
E. Storage Vessel Standards
F. Standards for Natural Gas Transmission and Storage
G. Monitoring, Recordkeeping, and Reporting Requirements
H. Cost and Economic Impacts
VI. Administrative Requirements
A. Docket
B. Paperwork Reduction Act
C. Executive Order 12866: A Significant Regulatory Action Determination
D. Regulatory Flexibility Act
E. Congressional Review Act
F. Unfunded Mandates Reform Act
G. Executive Order 12875: Enhancing the Intergovernmental Partnership
H. Executive Order 13045: Protection of Children from Environmental Health Risks and Safety Risks
I. Executive Order 13084: Consultation and Coordination with Indian Tribal Governments
J. National Technology Transfer and Advancement Act

The following conversions from metric to English units are provided to aid in reading the preamble to the promulgated oil and natural gas production and natural gas transmission and storage NESHAP.

Metric values	Equivalent English values
0.31 cubic meter per liter (m^3/liter)	1,750 standard cubic feet per barrel (ft^3/barrel).
39,700 liter/day	250 barrels per day (bpd).
79,500 liter/day	500 bpd.
0.90 Megagrams per year (Mg/yr)	1.0 ton per year (tpy).
18.4 thousand cubic meters per day (m^3/day)	650 thousand cubic feet per day (scf/day).
28.3 thousand m^3/day	1 million scf/day (MMscf/day).
85 thousand m^3/day	3 MMscf/day.
283 thousand m^3/day	10 MMscf/day.

I. Background

Section 112(b) of the Act lists 188 HAP and directs the EPA to develop rules to control all major and some area sources emitting HAP. On July 16, 1992 (57 FR 31576), the EPA published a list of major and area sources for which NESHAP are to be published (i.e., the source category list). Oil and natural gas production facilities were listed as a category of major sources.

The EPA included natural gas transmission and storage facilities in the proposed initial listing of source categories that was published in 1991. Comments received on the proposed initial list indicated that this source category did not contain major sources of HAP. As a result, natural gas transmission and storage facilities were not included as a distinct source category in the July 1992 final list of source categories of major sources of HAP.

During the development of the standards for the oil and natural gas production source category, information was obtained on glycol dehydration unit HAP emissions that are representative of both oil and natural gas production facilities and natural gas transmission and storage facilities. The information indicated that natural gas transmission and storage facilities have the potential to be major HAP sources. In addition, representatives of the natural gas transmission and storage source category stated to the EPA that there are major source glycol dehydration units in the source category. Therefore, the EPA amended the source category list on February 12, 1998 (63 FR 7155) to add natural gas transmission and storage as a major source category.

On February 6, 1998, the EPA also gave notice of its intention to add oil and natural gas production as an area source category (63 FR 6291), but did not amend the source category list to include such a category. In order to ensure that regulations applicable to the area source category are consistent with the Urban Air Toxics Strategy, to be implemented under section 112(k) of the Act, the EPA has deferred the regulation of oil and natural gas production facilities which are area sources until the Urban Air Toxics Strategy is finalized. The EPA expects this strategy to be finalized later this year.

II. Summary of Considerations in Developing the Rules

A. Purpose of the Regulations

The Act was developed, in part,

> * * * to protect and enhance the quality of the Nation's air resources so as to promote the public health and welfare and productive capacity of its population [the Act, section 101(b)(1)].

Oil and natural gas production and natural gas transmission and storage facilities are major and area sources of HAP emissions. The EPA estimates that approximately 67,000 Mg/yr of HAP are emitted from facilities in the oil and natural gas production source category and 2,100 Mg/yr of HAP are emitted from facilities in the natural gas transmission and storage source category. The primary HAP associated with oil and natural gas that have been identified include BTEX and n-hexane. Exposure to these chemicals has been demonstrated to cause adverse health effects. The likelihood of these adverse health effects depends on the range of ambient concentrations and the amount, frequency, and duration of exposures. The ambient concentrations are influenced by source-specific characteristics such as emission rates and local meteorological conditions. Exposure and health impacts due to the ambient concentrations are dependent on multiple factors that affect human variability such as genetics, age, health status (e.g., the presence of pre-existing disease), lifestyle, location of residence, activity patterns, and other factors.

Benzene, one of the HAP associated with these NESHAP, is classified as a known human carcinogen based on convincing human evidence (such as observed increases in the incidence of leukemia in exposed workers), as well as supporting evidence from animal studies. In addition, short-term inhalation of high benzene levels may cause nervous system effects such as drowsiness, dizziness, headaches, and unconsciousness in humans. At even higher concentrations of benzene, exposure may cause death, while lower concentrations may irritate the skin, eyes, and upper respiratory tract. Long-term inhalation exposure to benzene may cause various disorders of the blood, and toxicity to the immune system. Reproductive disorders in women, as well as developmental effects in animals, have also been reported for benzene exposure.

Short-term inhalation of relatively high concentrations of toluene by humans may cause nervous system effects such as fatigue, sleepiness, headaches, and nausea, as well as

irregular heartbeat. Repeated exposure to high concentrations may cause additional nervous system effects, including incoordination, tremors, death of brain cells, involuntary eye movements, and may impair speech, hearing, and vision. Long-term exposure to toluene by humans has also been reported to irritate the skin, eyes, and respiratory tract, and to cause dizziness, headaches, and difficulty with sleep. Children whose mothers have been exposed to high levels of toluene before birth may suffer nervous system dysfunction, attention deficits, and minor face and limb defects. Inhalation of toluene by pregnant women may also increase the risk of spontaneous abortion. Not enough information exists to determine toluene's carcinogenic potential.

Short-term inhalation of high levels of ethyl benzene by humans may cause throat and eye irritation, chest constriction, and dizziness. Long-term inhalation of ethyl benzene by humans may cause blood disorders. Animal studies have reported blood, liver, and kidney effects associated with ethyl benzene inhalation. Birth defects have been reported in animals exposed via inhalation; whether these effects may occur in humans is not known. Not enough information exists concerning ethyl benzene to determine its carcinogenic potential.

Short-term inhalation of high levels of mixed xylenes (a mixture of three closely-related compounds) by humans may cause irritation of the nose and throat, nausea, vomiting, gastric irritation, mild transient eye irritation, and neurological effects. Long-term inhalation of high levels of xylene in humans may result in nervous system effects such as headaches, dizziness, fatigue, tremors, and incoordination. Other reported effects include labored breathing, heart palpitation, severe chest pain, abnormal heart functioning, and possible effects on the blood and kidneys. Developmental effects have been reported in animals from xylene exposure via inhalation. Not enough information exists to determine the carcinogenic potential of mixed xylenes.

Short-term inhalation of high levels of n-hexane by humans may cause mild central nervous system effects (dizziness, giddiness, slight nausea, and headache) and irritation of the skin and mucous membranes. Long-term inhalation exposure to high levels of n-hexane by humans has been reported to cause nerve damage expressed as numbness in the extremities, muscular weakness, blurred vision, headache, and fatigue. Reproductive effects have been reported in animals after inhalation exposure (testicular damage in rats). Not enough information exists concerning n-hexane to determine its carcinogenic potential.

The EPA estimates that the NESHAP will reduce HAP emissions from those impacted HAP emission points in the oil and natural gas production source category by 77 percent and will reduce HAP emissions from impacted glycol dehydration units in the natural gas transmission and storage source category by 95.0 percent.

B. Technical Basis of Regulations

Section 112 of the Act regulates stationary sources of HAP. Section 112(b) of the Act lists 188 chemicals, compounds or groups of chemicals as HAP. The EPA is directed by section 112 to regulate the emission of HAP from stationary sources by establishing national emission standards.

Section 112(a)(1) of the Act defines a major source as:

> * * * any stationary source or group of stationary sources located within a contiguous area and under common control that emits or has the potential-to-emit considering controls, in the aggregate 10 tons per year (tpy) or more of any HAP or 25 tpy or more of any combination of HAP.

An area source is defined as a stationary source that is not a major source.

For major sources, the statute requires the EPA to establish standards that reflect the maximum degree of reduction in HAP emissions through application of maximum achievable control technology (MACT). Further, the EPA is required to establish standards that are no less stringent than the level of control defined under section 112(d)(3) of the Act, often referred to as the MACT floor. The final standards for major sources in the oil and natural gas production and natural gas transmission and storage source categories are based on the MACT floor for these source categories.

Prior to proposal, information on industry processes and operations, HAP emission points, and HAP emission reduction techniques were collected through section 114 questionnaires that were distributed to companies in the oil and natural gas production and natural gas transmission and storage source categories. These companies provided information on their representative facilities.

This information was used, in part, as the technical basis for determining the MACT level of control for the emission points covered under the final standards. In addition to information collected in the questionnaires, the EPA considered information available in the general literature, information submitted by industry on technical issues subsequent to the questionnaire responses, and additional information received during the public comment period for the proposed rules, in developing the final rules.

C. Stakeholder and Public Participation

In the development of these final standards, numerous representatives of the oil and natural gas production industry, the natural gas transmission and storage industry, and other interested parties were consulted. Industry representatives assisted in data gathering, arranging site visits, technical review, and sharing of industry-sponsored data collection activities. A data base comprised of all industry-supplied information was developed for evaluating HAP emissions and air emission controls for the final standards.

The standards for the oil and natural gas production and natural gas transmission and storage source categories were proposed in the **Federal Register** on February 6, 1998 (63 FR 6288). The preamble to the proposed standards described the rationale for the proposed standards. Public comments were solicited at the time of proposal. To provide interested parties the opportunity for oral presentation of data, views, or arguments concerning the proposed standards, a public hearing was offered at proposal. However, the public did not request a hearing and, therefore, one was not held. The public comment period was from February 6, 1998 to April 7, 1998. Fifty comment letters were received. Commenters included industry representatives, trade associations, State agencies, and other interested parties.

On January 15, 1999, in response to comments received on the proposal, the EPA also published a supplemental notice announcing the availability of additional data collected from facilities in the natural gas transmission and storage source category (64 FR 2611). Four comment letters were received from industry representatives and trade associations.

All of the comments were carefully considered and changes were made to the proposed standards when determined by the EPA to be appropriate. A detailed discussion of these comments and responses can be found in a document entitled "National Emissions Standards for Hazardous Air Pollutants for Source Categories: Oil and Natural Gas Production and Natural Gas Transmission and Storage—Background Information for Final Standards: Summary of Public Comments and Responses" (BID volume 2), which is

referenced in the **ADDRESSES** section of this preamble (EPA-453/R/99-004b, May 1999). The summary of comments and responses in the BID volume 2 serves as the basis for the revisions that have been made to the standards between proposal and promulgation. Section V of this preamble discusses the major changes.

III. Summary of Promulgated Standards

A. Promulgated Standards for Oil and Natural Gas Production for Major Sources

This final action amends title 40, chapter I, part 63 of the Code of Federal Regulations by adding a new Subpart HH—National Emission Standards for Hazardous Air Pollutants from Oil and Natural Gas Production Facilities. The standards apply to owners and operators of facilities that process, upgrade, or store (1) hydrocarbon liquids (with the exception of those facilities that exclusively handle black oil) to the point of custody transfer and (2) natural gas from the well up to and including the natural gas processing plant. The standards limit HAP emissions from the following emission points at facilities that are major sources of HAP: (1) process vents on glycol dehydration units, (2) storage vessels with flash emissions, and (3) equipment leaks at natural gas processing plants.

As required by the Act, the determination of a facility's potential to emit HAP and, therefore, its status as a major source, is based on the total of all HAP emissions from all activities at a facility, except that section 112(n)(4) of the Act prohibits aggregating emissions from oil or gas exploration or production wells (and their associated equipment) and emissions from pipeline compressor or pump stations with emissions from other similar units. A definition of associated equipment is contained in the final standards.

To determine potential emissions for determining major source status, the final standards specify that an owner or operator that can document a decline in annual production each year for 5 years prior to the effective date of the rule must calculate the maximum facility throughput as the average of the annual throughput for the 3 years prior to the effective date of the rule, multiplied by 1.2. If any increase in production is observed over the 5 years prior to the effective date of the rule, the owner or operator must calculate the maximum facility throughput as the maximum annual throughput over the 5 years prior to the effective date times 1.2. The owner or operator must recalculate the maximum throughput if actual annual throughput increases to a rate above the calculated values. In addition, for other parameters used to estimate emissions, the owner or operator must use the maximum value measured over the period for which the maximum throughput is calculated and may be determined as an annual average or the highest single measured value.

1. Applicability

The final standards for oil and natural gas production facilities require that the owner or operator of a major source of HAP reduce HAP emissions from glycol dehydration units and storage vessels through the application of air emission control equipment or pollution prevention measures, or a combination of both. In addition, the owner or operator of a natural gas processing plant that is a major source of HAP is required to reduce HAP emissions from equipment leaks by establishing a leak detection and repair (LDAR) program.

The following are exempt from the requirements of subpart HH:

- Owners and operators of facilities that exclusively process, handle, and store black oil are not subject to the final standards. Black oil is defined in the final rule as a hydrocarbon liquid with an initial gas-to-oil ratio (GOR) less than 0.31 cubic meters per liter (m^3/liter) and an American Petroleum Institute (API) gravity less than 40 degrees. For this subpart, a facility that uses natural gas for fuel or generates gas from black oil still qualifies for this exemption.
- Oil and natural gas production facilities prior to the point of custody transfer that have a facilitywide actual annual average natural gas throughput less than 18.4 thousand cubic meters per day (m^3/day), and a facilitywide actual annual average hydrocarbon liquid throughput less than 39,700 liters per day (liter/day.) Oil and natural gas production facilities after the point of custody transfer, including natural gas processing plants, do not qualify for these exemptions.

2. Glycol Dehydration Unit Process Vent Standards

The MACT standard for process vents on new and existing glycol dehydration units was set at the floor level of control. To determine the MACT floor, the EPA divided glycol dehydration units into two sizes: (1) small glycol dehydration units with actual annual average natural gas throughputs less than 85 thousand m^3/day or with actual average benzene emissions less than 0.90 Mg/yr, and (2) large glycol dehydration units with actual annual average natural gas throughputs equal to or greater than 85 thousand m^3/day or with actual average benzene emissions equal to or greater than 0.90 Mg/yr. For small glycol dehydration units, the EPA determined that the MACT floor was no control and that it was not cost effective to select a regulatory alternative beyond the floor.

For large glycol dehydration units, the EPA reviewed the information that was available to develop a MACT floor (a detailed discussion of the development of the MACT floor can be found in the docket, Air Docket A-94-04). This information consisted of data gathered from: (1) industry responses to the EPA's Air Emission Survey Questionnaires, (2) site visits, (3) meetings with stakeholders, and (4) literature.

As required under section 112(d) of the Act, the EPA developed the MACT floor based on "* * * the average limitation achieved by the best performing 12 percent of the existing sources * * *." The EPA obtained information on 200 glycol dehydration units that were considered to be major sources of HAP (prior to control). Of these, 34 percent (67 units) were controlled using a variety of control technologies, including: condensation, combustion, and a combination of condensation and combustion. The types of control technologies used by the industry have been demonstrated, in other applications, to achieve varying levels of emission reduction (ranging from 95.0 to 98 percent or better). The EPA could not identify a technical basis for the variation in the performance levels achieved by the controls reported to be used to control process vents on glycol dehydration units. In order to account for the variability in HAP emission reduction efficiencies, the EPA selected 95.0 percent as the required emission reduction (i.e., the MACT floor) for large glycol dehydration units in the oil and natural gas production source category.

The final standards require that all process vents on new and existing glycol dehydration units that are located at major HAP sources be controlled unless (1) the actual flowrate of natural gas to the glycol dehydration unit is less than 85 thousand m^3/day, on an annual average basis; or (2) the actual average benzene emissions from the glycol dehydration unit are less than 0.90 Mg/yr. Glycol dehydration units that meet these criteria are not subject to the control requirements of subpart HH.

Glycol dehydration units that are subject to the control requirements are required to connect, through a closed-vent system, each process vent on the glycol dehydration unit to an air

emission control system. The control system must reduce emissions: (1) by 95.0 percent or more of HAP, (2) to an outlet concentration of 20 parts per million by volume (ppmv) or less (for combustion devices), or (3) to a benzene emission level of 0.90 Mg/yr or less. Pollution prevention measures, such as process modifications or combinations of process modifications and one or more control devices that reduce the amount of HAP emissions generated, are allowed as an alternative provided they achieve the required emission reductions.

3. Storage Vessel Standards

Final standards are established for existing and new storage vessels with the potential for flash emissions that are located at major HAP sources. Storage vessels with the potential for flash emissions are defined as those that contain a hydrocarbon liquid with a storage tank GOR equal to or greater than 0.31 m^3/liter, an API gravity equal to or greater than 40 degrees, and an actual annual average throughput of hydrocarbon liquids equal to or greater than 79,500 liter/day.

Flash emissions from storage vessels occur when a hydrocarbon liquid with a high vapor pressure flows from a pressurized vessel into a vessel with a lower pressure. Flash emissions typically occur when a hydrocarbon liquid, such as condensate, is transferred from a production separator to a storage vessel. The final standards require that storage vessels with the potential for flash emissions be equipped with an air emission control system.

Under the final standards, a storage vessel with the potential for flash emissions is required to be equipped with a cover vented through a closed-vent system to a control device that (1) recovers or destroys HAP emissions with an efficiency of 95.0 percent or greater, or (2) for combustion devices, reduces HAP emissions to an outlet concentration of 20 ppmv or less.

A pressurized storage vessel that is designed to operate as a closed system is considered in compliance with the promulgated requirements for storage vessels. In addition, owners or operators that are meeting the requirements of 40 CFR part 60, subpart Kb; 40 CFR part 63, subpart G; or 40 CFR part 63, subpart CC, are also considered in compliance.

4. Standards for Equipment Leaks

The final rule requires owners and operators of natural gas processing plants that are major HAP sources to control HAP emissions from leaks from ancillary equipment and compressors that contain or contact a liquid or gas that has a total volatile hazardous air pollutant (VHAP) concentration equal to or greater than 10 percent by weight. The final equipment leak standards do not apply to ancillary equipment and compressors that operate in VHAP service less than 300 hours per year. Also, an owner or operator that is subject to and controlled under the provisions of 40 CFR part 60, subpart KKK; or 40 CFR part 61, subpart V; or 40 CFR part 63, subpart H, is only required to comply with the requirements of that subpart.

For equipment subject to these standards at either an existing or new source, the owner or operator is required to implement a LDAR program and where necessary, perform equipment modifications. Pumps in light liquid service, valves in gas/vapor and light liquid service, and pressure relief devices in gas/vapor service within a process unit that is located (1) at a nonfractionating facility that processes less than 283 thousand m^3/day, or (2) on the Alaskan North Slope, are exempt from some of the routine LDAR monitoring requirements. In addition, reciprocating compressors in wet gas service are exempt from the compressor requirements.

5. Air Emission Control Equipment Requirements

Specific performance and operating requirements are included for each control device installed by the owner or operator. Control devices are required to reduce the mass content of the gases vented to the device (1) by 95.0 percent or greater by weight as total organic compounds (TOC), less methane and ethane, or total HAP; or (2) for combustion devices, to an outlet HAP or TOC concentration of 20 ppmv or less.

Closed vent systems that contain bypass devices that could divert vent streams away from the control device must either install a flow indicator or secure the bypass valve in the nondiverting position to ensure that the control device is not bypassed.

Certain specifications for covers apply based on the type of cover and where the cover is installed. Requirements are specified for vapor leak-tight covers installed on storage vessels.

6. Test Methods and Procedures

An owner or operator must be able to demonstrate that the criteria for exemptions from control requirements are met when controls are not applied or when existing controls are adequate to meet the exemption criteria. For example, owners or operators of glycol dehydration units that do not install air emission controls because the actual average benzene emission rate from the unit is less than 0.90 Mg/yr must be able to demonstrate that the actual average benzene emission rate from the unit is less than 0.90 Mg/yr.

Procedures for demonstrating the HAP emission reduction efficiency of control devices and HAP concentration are consistent with procedures established in previously promulgated NESHAP that apply to emission sources similar to those addressed in the final standards. Engineering calculations, modeling (using EPA-approved models), and previous test results are generally acceptable means of demonstrating compliance, except where such means are not conclusive. Test procedures are specified in the final rule for use when testing is required to demonstrate compliance.

An alternative test procedure is provided to demonstrate control efficiency when a condenser is used for controlling emissions from a glycol dehydration unit reboiler vent. The inclusion of the alternative test procedure is appropriate in this standard because of difficulties associated with testing the inlet to a condenser in this application.

Procedures and test methods are also specified for the detection of leaks from ancillary equipment and compressors and leaks in covers and closed vent systems.

7. Monitoring and Inspection Requirements

The final standards require that the owner or operator periodically inspect and monitor air emission control equipment. Periodic inspections are required for certain types of covers to ensure gaskets and seals are in good condition and for closed-vent systems to ensure all fittings remain leak-tight. An owner or operator is required to periodically perform these inspections to determine and ensure that these equipment operate with no leaks.

For covers, the owner or operator is required to perform initial and semiannual visual inspections. For closed vent systems, the owner or operator is required to perform an initial leak inspection and annual visual inspections to detect leaks. In addition, the owner or operator of closed vent system components that are not permanently or semi-permanently sealed must perform annual leak inspections.

The final standards require continuous monitoring of control device operation through the use of automated instrumentation. Continuous monitoring systems measure and record control

device operating parameters to ensure compliance with the standards.

8. Recordkeeping and Reporting Requirements

The recordkeeping and reporting requirements associated with the final standards are primarily those specified in the part 63 General Provisions (40 CFR 63, subpart A). Major sources are subject to all of the requirements of the General Provisions with the exception that (1) owners or operators are allowed up to 1 year from the effective date of the standards to submit the initial notification described in § 63.9(b) of subpart A; and (2) owners or operators are allowed to submit Periodic reports and startup, shutdown, and malfunction reports semiannually instead of quarterly. The EPA selected these specific exceptions due to the large number of facilities that need to submit notifications or reports related to the NESHAP. The EPA believes that these exceptions will not adversely affect the implementation of the final regulation or reduce its impact on HAP emissions.

B. Promulgated Standards for Natural Gas Transmission and Storage for Major Sources

The final standards amend title 40, chapter I, part 63 CFR by adding a new Subpart HHH—National Emission Standards for Hazardous Air Pollutants from Natural Gas Transmission and Storage Facilities. The standards apply to owners and operators of facilities that process, upgrade, transport or store natural gas prior to delivery to a local distribution company (LDC) or a final end user if no LDC is present. A compressor station that transports natural gas to a natural gas processing plant is considered a part of the oil and natural gas production source category.

A facility's potential to emit is required to be calculated based on a maximum facility throughput. For storage facilities or facilities that store and transport natural gas, the final rule specifies procedures for calculating this maximum throughput based on the facility's maximum withdrawal and injection rates and the working gas capacity of the storage field. Facilities that only transport natural gas are required to calculate maximum throughput as the highest annual throughput over 5 years prior to the effective date of the rule, multiplied by 1.2. The owner or operator must also establish maximum values of other parameters required to calculate emissions over the same period used to determine maximum throughput.

1. Applicability

The final standards for natural gas transmission and storage facilities require that the owner or operator of a major source of HAP reduce HAP emissions from glycol dehydration units through the application of air emission control equipment or pollution prevention measures, or a combination of both. The owner or operator of a facility that processes less than 28.3 thousand m^3/day of natural gas facilitywide on an actual annual average basis, where glycol dehydration units are the only HAP emission points, is exempt from the requirements of subpart HHH.

2. Glycol Dehydration Unit Process Vent Standards

The MACT standard for process vents on new and existing glycol dehydration units was set at the floor level of control. To determine the MACT floor, the EPA divided glycol dehydration units into two sizes: (1) small glycol dehydration units with actual annual average natural gas throughputs less than 283 thousand m^3/day or with actual average benzene emissions less than 0.90 Mg/yr, and (2) large glycol dehydration units with actual annual average natural gas throughputs equal to or greater than 283 thousand m^3/day or with actual average benzene emissions equal to or greater than 0.90 Mg/yr. As discussed in the January 15, 1999 supplemental notice (64 FR 2611), the EPA determined that the MACT floor for large glycol dehydration units was 95.0 percent control. For small glycol dehydration units, the EPA determined that the MACT floor was no control and that it was not cost effective to select a regulatory alternative beyond the floor.

The final standards require that all process vents on new and existing glycol dehydration units that are located at major HAP sources be controlled unless (1) the actual annual average flowrate of natural gas to the glycol dehydration unit is less than 283 thousand m^3/day, or (2) the actual average benzene emissions from the glycol dehydration unit are less than 0.90 Mg/yr.

Glycol dehydration units that are subject to the control requirements are required to connect, through a closed-vent system, each process vent on the glycol dehydration unit to an air emission control system that reduces emissions: (1) by 95.0 percent or more of HAP, (2) to an outlet HAP concentration of 20 ppmv or less, for combustion devices, or (3) to a benzene emission level of 0.90 Mg/yr or less. As with the final standards for the oil and natural gas production NESHAP, pollution prevention measures, such as process modifications (or combinations of process modifications and control devices) that reduce the amount of HAP emissions generated, are allowed as an alternative provided they achieve the required emission reductions.

3. Air Emission Control Equipment Requirements

Specific performance and operating requirements are included for each control device installed by the owner or operator. Control devices are required to reduce the mass content of the gases vented to the device (1) by 95.0 percent or greater by weight as TOC, less methane and ethane, or total HAP; or (2) for combustion devices, to an outlet HAP or TOC concentration of 20 ppmv or less.

Closed vent systems that contain bypass devices that could divert vent streams away from the control device must either install a flow indicator or secure the bypass valve in the nondiverting position to ensure that the control device is not bypassed.

4. Test Methods and Procedures

An owner or operator must be able to demonstrate that the criteria for exemptions from control requirements are met when controls are not applied or when existing controls are adequate to meet the exemption criteria. For example, owners or operators of glycol dehydration units that do not install air emission controls because the actual average benzene emission rate from the unit is less than 0.90 Mg/yr must be able to demonstrate that the actual average benzene emission rate from the unit is less than 0.90 Mg/yr.

Procedures for demonstrating the HAP emission reduction efficiency of control devices and HAP concentration are consistent with procedures established in previously promulgated NESHAP that apply to emission sources similar to those addressed in the final standards. Engineering calculations, modeling (using EPA-approved models), and previous test results are generally acceptable means of demonstrating compliance, except where such means are not conclusive. Test procedures are specified in the final rule for use when testing is required to demonstrate compliance.

An alternative test procedure is provided to demonstrate control efficiency when a condenser is used for controlling emissions from a glycol dehydration unit reboiler vent. The inclusion of the alternative test procedure is appropriate in this standard because of difficulties

associated with testing the inlet to a condenser in this application. Procedures and test methods are also specified for detection of leaks in closed-vent systems.

5. Monitoring and Inspection Requirements

The monitoring and inspection requirements are (1) periodic control equipment monitoring, (2) initial leak detection inspections for closed-vent systems to ensure all fittings are leak-tight, (3) annual visual inspections of closed-vent systems (closed vent system components that are not permanently or semi-permanently sealed are also required to be annually inspected for leaks), and (4) continuous monitoring of control device operation. Continuous monitoring requires the use of automated instrumentation that measures and records control device compliance operating parameters.

C. Recordkeeping and Reporting Provisions

The recordkeeping and reporting requirements associated with the final standards are primarily those specified in the part 63 General Provisions (40 CFR 63, subpart A). Major sources are subject to all of the requirements of the General Provisions, except that (1) owners or operators are allowed up to 1 year from the effective date of the standards to submit the initial notification required under § 63.9(b) of subpart A and (2) owners or operators are allowed to submit Periodic reports and startup, shutdown, and malfunction reports semiannually instead of quarterly. These exceptions were selected to maintain consistency between the major source provisions of the final regulations for natural gas transmission and storage facilities and oil and natural gas production facilities.

IV. Summary of Impacts

A. HAP Emission Reductions

For major sources, the EPA estimated that the final oil and natural gas production standards for existing sources will result in a reduction of HAP emissions from 39,000 Mg/yr to 9,000 Mg/yr. In addition, HAP emissions would be reduced by 3,000 Mg/yr for new sources over the first 3 years after promulgation of these standards.

Table 1 presents the major source emission reductions, in addition to other environmental, energy, and cost impacts, that the EPA estimates will occur from the implementation of the standards for oil and natural gas production.

TABLE 1.—SUMMARY OF ESTIMATED ENVIRONMENTAL, ENERGY, AND ECONOMIC IMPACTS EXISTING AND NEW MAJOR SOURCES

Impact category	Existing oil and natural gas production	New oil and natural gas production	Existing natural gas transmission and storage *
Estimated number of impacted facilities	440	44	7
Emission reductions (Mg/yr):			
HAP	30,000	3,000	390
VOC	61,000	6,100	610
Methane	7,000	700	230
Secondary environmental emission increases (Mg/yr):			
Sulfur oxides	<1	<1	<1
Nitrogen oxides	<5	<1	<1
Carbon monoxide	<1	<1	<1
Energy (Kilowatt hours per year)	38,000	3,800	None
Implementation costs (Million of July 1993 $):			
Total installed capital	6.5	0.7	0.28
Total annual	4.0	0.4	0.3

* No new major sources are anticipated for this source category after the effective date for new sources and in the first 3 years following promulgation of the rule.

The EPA estimates that the final natural gas transmission and storage standards for existing sources will result in a reduction of HAP emissions from 2,100 Mg/yr to 1,710 Mg/yr. No new major sources are anticipated in the first 3 years after promulgation of this NESHAP. Table 1 also presents the major source emission reductions, in addition to other environmental, energy, and cost impacts, that the EPA estimates will occur from the implementation of the standards for existing natural gas transmission and storage facilities.

The air emission reductions achieved by these standards, when combined with the air emission reductions achieved by other standards mandated by the Act, will accomplish the primary goal of the Act to:

* * * enhance the quality of the Nation's air resources so as to promote the public health and welfare and the productive capacity of its population.

B. Secondary Environmental Impacts

Other environmental impacts are those associated with operation of certain air emission control devices. The EPA's secondary air emissions impact analyses for the oil and natural gas production source category consider a facility's ability to handle collected vapors. Some remotely located facilities may not be able to use collected vapor for fuel or recycle it back into the process. In addition, it may not be technically feasible for some facilities to safely utilize the non-condensable vapor streams from condenser systems as an alternative fuel source. An option for these facilities is to combust these vapors by flaring, rather than installing condensers.

These limitations are reflected in the analyses conducted by the EPA. In the analyses, the EPA estimated that (1) 45 percent of all impacted production facilities will be able to use collected vapors from installed control options as an alternative fuel source for an on-site combustion device such as a process heater or the glycol dehydration unit firebox, (2) 45 percent will be able to recycle collected vapors from installed control options into a low pressure header system for combination with other hydrocarbon streams handled at the facility, and (3) 10 percent will direct all collected vapor to an on-site flare. The secondary air impacts are associated with flare operations.

The adverse secondary air impacts would be minimal in comparison to the primary HAP reduction benefits from the implementation of the control options for major oil and natural gas sources. The estimated national annual increase in secondary air pollutant emissions that would result from the use of a flare to comply with the standards is estimated to be less than 1.0 Mg/yr for both sulfur oxide (SO_X) and carbon monoxide (CO) and less than 5 Mg/yr for nitrogen oxides (NO_X). These estimates are for major oil and natural gas production sources.

The anticipated increases in secondary air pollutant emissions are based on six affected facilities utilizing flares and are estimated to be less than 1.0 Mg/yr for SO_X, CO, and NO_X, each, from the implementation of the control options for major sources at natural gas transmission and storage facilities.

The adverse water impacts anticipated from the implementation of control options for the standards are expected to be minimal. The water impacts associated with the installation of a condenser system for the glycol dehydration unit reboiler vent would be minimal. This is because the condensed water collected with the hydrocarbon condensate can be directed back into the system for reprocessing with the hydrocarbon condensate or, if separated, combined with produced water for disposal by reinjection.

Similarly, the water impacts associated with installation of a vapor control system would be minimal. This is because the water vapor collected along with hydrocarbon vapors in the vapor collection and redirect system can be directed back into the system for reprocessing with the hydrocarbon condensate or, if separated, combined with the produced water for disposal by reinjection.

There are no adverse solid waste impacts anticipated from the implementation of the standards.

C. Energy Impacts

Energy impacts are those energy requirements associated with the operation of emission control devices. The EPA estimated that the operation of add-on control devices (e.g., condensers, flares, etc.) would not require additional energy. Vapor collection and redirect systems used for the control of emissions from a fixed-roof storage vessel require electricity for operation of the primary components of the system, including fans and blowers.

The EPA estimated that the annual energy requirements for each vapor collection/recovery system installed to comply with the oil and natural gas production storage vessel standards are estimated to be 300 kilowatt hours per year (kW-hr/yr). The EPA also estimated that approximately 125 oil and natural gas production major source facilities would install this control option. The national energy demand increase for existing sources was estimated to be 38,000 kW-hr/yr.

Because storage vessels are not regulated under the natural gas transmission and storage NESHAP, the EPA estimated that there would be no national energy demand increase from the operation of any of the control options analyzed under the natural gas transmission and storage standards for major sources.

The standards encourage the use of emission controls that recover hydrocarbon products, such as methane and condensate, that can be used on-site as fuel or reprocessed, within the production process, for sale. Thus, the standards have a positive impact associated with the recovery of non-renewable energy resources.

D. Cost Impacts

The estimated total capital cost to comply with the rule for existing major sources in the oil and natural gas production source category is approximately $6.5 million. The total capital cost for new major sources is estimated to be approximately $700,000.

The total estimated net annual cost to industry to comply with the requirements for existing major sources in the oil and natural gas production source category is approximately $4.0 million per year. The total net annual cost for new major sources is approximately $400,000 per year. These estimated annual costs include (1) the cost of capital; (2) operating and maintenance costs; (3) the cost of monitoring, recordkeeping, and reporting (MRR); and (4) any associated product recovery credits.

The estimated total capital cost to comply with the rule for major sources in the natural gas transmission and storage source category is approximately $280,000.

The total estimated net annual cost to industry to comply with the requirements for major sources in the natural gas transmission and storage source category is approximately $300,000. As with the oil and natural gas production total estimated annual cost to industry, this annual cost estimate includes (1) the cost of capital, (2) operating and maintenance costs, (3) the cost of MRR, and (4) any associated product recovery credits.

E. Economic Impacts

The EPA prepared an economic impact analysis that evaluates the impacts of the regulation on affected producers, consumers, and society. The economic analysis focuses on the regulatory effects on the U.S. natural gas market that is modeled as a national, perfectly competitive market for a homogenous commodity. The analysis does not include a model to assess the regulatory effects on the world crude oil market because the regulation is anticipated to affect less than 5 percent of the total U.S. crude oil production, and thus, it is unlikely to have any influence on the U.S. supply of crude oil or world crude oil prices.

The imposition of regulatory costs on the natural gas market result in negligible changes in natural gas prices, output, employment, foreign trade, and business profitability. Price and output changes as a result of the regulation are less than 0.0005 of 1 percent, which is significantly less than observed market trends. For example, between 1992 and 1993 the average change in wellhead price increased by 14 percent, while domestic production rose by 3 percent.

The total annual social cost of the regulation is $4.6 million, which accounts for the compliance cost imposed on producers, as well as market adjustments that influence the revenues to producers and consumption by end users, plus the associated deadweight loss to society of the reallocation of resources.

V. Significant Comments and Changes to the Proposed Standards

In response to comments received on the proposed standards, several changes have been made to the final rules. While several of these changes are clarifications designed to clarify the Agency's original intent, a number of them are significant changes to the proposed standard requirements. A summary of the substantive comments and/or changes made since proposal are described in the following sections. Detailed Agency responses to public comments and the revised analysis for the final rule are contained in the BID, volume 2 (EPA-453/R-99-004b, May 1999) and docket (see **ADDRESSES** section of this preamble).

A. Definition of Facility

The EPA developed the proposed definition of facility to (1) identify criteria that define a grouping of emission points that meet the intent of the language contained in section 112(a)(1) of the Act: "* * * located within a contiguous area and under

common control. * * *"; and (2) contain terms that are meaningful and easily understood within the regulated industries. The proposed definition was based on individual surface sites and the idea that equipment located on different oil and gas properties (oil and gas lease, mineral fee tract, subsurface unit area, surface fee tract, or surface lease tract) shall not be aggregated. In addition, the proposed definition of a production field facility was limited to glycol dehydration units and storage vessels with the potential for flash emissions. The EPA requested comments on the proposed definition of facility. Specifically, the EPA requested comments on whether the proposed definition appropriately implements the intent of the major source definition in section 112(a)(1) for the oil and natural gas production and natural gas transmission and storage source categories or whether another definition would better implement this intent.

Several commenters responded to the EPA's request for comments on the definition of facility. The commenters requested clarification of, or suggested changes to, the proposed definition of facility. The commenters were primarily concerned that large groupings of equipment would inappropriately be considered a part of the same facility, resulting in a major source determination. In particular, the commenters were concerned about how subparts HH and HHH would treat units, contiguous surface sites, and surface sites with equipment under separate ownership. The commenters requested clarification of the definition of facility to prevent this confusion.

The EPA intended that the facility definition, as it applies to the oil and natural gas production source category, should lead to an aggregation of emissions in a major source determination that is reasonable, consistent with the intent of the Act, and easily implementable.

The EPA believes that it would not be reasonable to aggregate emissions from surface sites that are located on the same lease, but are great distances apart. The definition of facility states that equipment located on different oil and natural gas properties (e.g., leases) are not to be aggregated. Although units (which are made up of more than lease or tract) are under common control, under the definition of facility, the equipment located on different leases contained within each unit would not be aggregated.

Under section 112(a)(1) of the Act, a major source is defined as "* * * any stationary source or group of stationary sources located within a contiguous area and under common control.* * *" The EPA believes that by defining facility based on individual surface sites, the EPA has provided relief for individual surface sites that are located on the same lease, but are far apart, and excluding contiguous surface sites located on the same lease would be contrary to the intent of the Act.

Finally, the terms contained in the definition of facility (e.g., surface site and lease) are well understood within the industry and by enforcement agencies, and the EPA does not believe that additional definitions or clarifications regarding these terms are necessary.

In response to comments regarding specific clarification to the definition of facility, the EPA has made several changes to the definition of facility. The EPA modified the definition of facility to point to the definition of "surface site." In subpart HHH, the EPA has added a definition of "surface site," and modified the definition of facility to point to the new definition of "surface site."

The EPA further modified the definition of facility in subpart HH by: (1) specifying that "upgraded" means "the removal of impurities or other constituents to meet contract specifications"; (2) changing the term "unit areas" to "surface unit areas"; and (3) specifying that separate surface sites, whether or not connected by a road, waterway, power line or pipeline, would not be considered a part of the same facility.

Commenters recommended that the EPA expand its definition of production field facility in subpart HH to include additional HAP emission points beyond glycol dehydration units and storage vessels with flash emission potential. The concern was that several facilities that could otherwise be major sources of HAP would be exempt from subpart HH under the proposed definition of facility.

One of the EPA's objectives was to develop a definition of facility that would comply with section 112(n)(4) of the Act and at the same time, reduce the burden on owners and operators in making a major source determination. The EPA's evaluation of HAP emission sources in production field operations suggested that other potential HAP emission points at these facilities (e.g., equipment leaks) would be inconsequential to the determination of a facility's major source status. The EPA believes that eliminating the need to quantify HAP emissions from small sources at production field facilities would not affect the major source status determination, but would reduce the burden on owners or operators.

Other commenters requested that the EPA clarify, within the definition of facility in subpart HHH, whether the EPA intended to exclude facilities used to store natural gas after the gas enters the local distribution system of a gas utility. The commenter recommended that the EPA clarify that the definition of facility applies all the way to the end user only if there is no local distribution company.

The affected source in the natural gas transmission and storage source category should run all the way to the end user only if there is no local distribution company. Therefore, the EPA modified the definition of facility in subpart HHH to state that if there is not a local distribution company, the facility runs to the end user.

Some commenters were concerned that the definition of facility in subpart HH suggests that a natural gas storage facility could qualify as a production facility, since natural gas storage takes place in depleted gas wells, and liquids are transferred for processing to the plant.

Subpart HH contains a definition of field natural gas which means "* * * natural gas that is extracted from a production well prior to entering the first stage of processing, such as dehydration." In addition, a production well is defined in § 63.761 as a "* * * hole drilled in the earth from which * * * field natural gas is extracted." Since the gas handled by a natural gas storage facility has been dehydrated, the EPA believes that the natural gas handled by a storage facility would not be considered field natural gas. Therefore, given the definitions of production well and field natural gas, a natural gas storage field that uses a depleted gas well for storage would not qualify as a production facility. The EPA does not believe that clarification of the definition of facility is necessary in response to this comment.

B. Definition of "Associated Equipment"

Section 112(n)(4)(A) of the Act states:

> * * * emissions from any oil or gas exploration or production well (with its associated equipment) and emissions from any pipeline compressor or pump station shall not be aggregated with emissions from other similar units, whether or not such units are in a contiguous area or under common control, to determine whether such units or stations are major sources, and in the case of any oil or gas exploration or production well (with its associated equipment), such emissions shall not be aggregated for any purpose under this section.

According to the statutory definition of major source in section 112(a)(1) of the Act, HAP emissions from all emission points within a contiguous area and under common control must be counted in a major source determination. By stating that emissions from any oil and gas production and exploration well (with its associated equipment) cannot be aggregated for a major source determination, the provisions of section 112(n)(4)(A) mean HAP emissions from each well and each piece of equipment considered to be associated with the well must be evaluated separately in a major source determination. That is, any well or piece of associated equipment would only be determined to be a major source if HAP emissions from that well or piece of associated equipment were major.

Therefore, to implement this special provision of the Act for the oil and natural gas production source category, a definition of "associated equipment" was necessary. However, a definition for the term "associated equipment" was not provided in the statute. The EPA proposed that "associated equipment" be defined as all equipment associated with a production well up to the point of custody transfer, except that glycol dehydration units and storage vessels with the potential for flash emissions would not be associated equipment. In developing this proposed definition, the Agency identified and evaluated several options. The Agency also sought and received input from industry and other stakeholders.

In the proposal, the EPA specifically requested comments on the proposed definition of "associated equipment." The EPA requested that commenters disagreeing with the proposal provide alternative definition options, along with supporting documentation, that would provide the relief that Congress intended for this industry in section 112(n)(4), while preserving the EPA's ability to regulate HAP emissions from glycol dehydration units and storage vessels with the potential for flash emissions.

Several commenters responded to the EPA's request for comments on the EPA's interpretation of the term "associated equipment" as used in section 112(n)(4) of the Act. Although several commenters did not fully support the EPA's interpretation of section 112(n)(4), they acknowledged that the proposed definition of associated equipment is a workable solution in comparison to other options for this definition. According to the commenters, aggregation of glycol dehydration units and storage vessels with flash emission potential would result in the same major source determination as aggregation of all potential sources, but would reduce the burden on the facility operator. Other commenters argued that section 112(n)(4) mandates no aggregation of emissions from individual sources at oil and gas production fields, and that the EPA exceeded its statutory authority by allowing for the aggregation of emissions from glycol dehydration units and storage vessels with the potential for flash emissions.

After consideration of these comments, the EPA agrees with those commenters who supported the proposed definition as a workable solution, and is promulgating the definition as proposed. The EPA disagrees with those commenters who argued that the Agency exceeded its statutory authority for the reasons discussed below.

Section 112(a)(1) generally requires HAP emission points within a contiguous area and under common control to be aggregated in a major source determination for the purposes of section 112. While this approach is appropriate for facilities in most industries, it may lead to unreasonable aggregations if strictly applied to oil and natural gas field operations. Given that some oil and natural gas operations (e.g., a production field) may cover several square miles or that leases and mineral rights agreements give some companies control over a large area of contiguous property, determination of major source status strictly by the language of section 112(a)(1) could mean in this industry that HAP emissions must be aggregated from emission points separated by large distances.

Congress addressed the unique aspects of the oil and natural gas production industry by providing the special provisions in section 112(n)(4) of the Act referring to the "* * * oil and gas exploration and production well (and its associated equipment) * * *." However, Congress did not provide a definition of the term "associated equipment" in the statutory language, leaving its interpretation to the EPA. A definition of this term is important in determining the major source status of facilities in both the oil and natural gas production and the natural gas transmission and storage source categories.

In the absence of clear guidance in the statute, the EPA evaluated various options for defining "associated equipment" prior to proposal. The EPA's objective was to arrive at a reasonable interpretation that would (1) provide substantive meaning to the term "associated equipment" consistent with congressional intent; (2) prevent the aggregation of small, scattered HAP emission points in major source determinations; (3) be easily implementable; and (4) not preclude the aggregation of significant HAP emission points in the source category. Due to the lack of clarity in the statute and the potential impact on major source determinations, the Agency worked with industry stakeholders to identify and evaluate options prior to proposal. Industry representatives expressed their goals for the interpretation of associated equipment, and provided information on the magnitude of HAP emission points and the potential impacts of various options considered by the EPA.

The EPA considered, but rejected, a definition based on a narrow interpretation that would include only valves and fittings on a well as being associated equipment primarily because this option would not provide any additional relief to industry beyond what would have been provided had Congress only used the term "well" in section 112(n)(4) of the Act. The EPA also rejected a definition, initially recommended by industry, that was based on a broad interpretation that would include equipment far beyond the well as associated equipment.

In discussions with industry stakeholders over an extended period of time prior to proposal, the Agency sought to reach a workable solution on the definition of associated equipment, one that recognized the need to implement relief for this industry as Congress intended, and that also allowed for the appropriate regulation of significant emission points. In a technical evaluation, the EPA identified glycol dehydration units and storage tanks with flash emission potential as substantial contributors to HAP emissions, particularly relative to sources such as production wells. This conclusion was supported by industry. Under the proposed approach, associated equipment was defined as all equipment up to the point of custody transfer, excluding glycol dehydration units and storage vessels with the potential for flash emissions. This approach also included a definition of facility in the rule that effectively limited the distance over which all emission points (including glycol dehydration units and storage vessels with the potential for flash emissions) may be aggregated. Based on discussions with industry prior to proposal, as well as comments received supporting the proposed definition of associated equipment, the Agency believes that the proposed approach

best meets both industry and EPA goals for implementation of the language of section 112(n)(4).

Commenters who argued that the Agency exceeded its authority with the definition of associated equipment offered no substantive new information to support their claim. The EPA could not find support in the statute or in the legislative history that indicated that Congress intended to preclude aggregation of all emission points, including such significant ones as glycol dehydration units and storage tanks with flash emission potential through their inclusion as associated equipment. Rather, there are clear indications, in the EPA's judgement, that Congress' primary intent was to preclude the aggregation of small emitting sources over vast distances. The legislative history of the Act, for example, indicates that Congress believed that oil and natural gas production wells and their "associated equipment" generally have low HAP emissions, and are typically located in widely dispersed geographic areas, rather than being concentrated in a single area. The EPA used this background as a guide in developing an interpretation of "associated equipment" along with available data on HAP emissions from emission points within the oil and natural gas production source category. The EPA believes that glycol dehydration units and storage vessels with the potential for flash emissions are not the type of small HAP emission points that Congress intended to be included in the definition of associated equipment.

After the EPA's review and consideration of all comments received on the proposal, the definition of associated equipment promulgated in today's rule is the same as proposed.

C. Applicability

1. Black Oil Definition

In the proposed subpart HH, the EPA provided an exemption from the subpart for facilities that exclusively handle black oil. Black oil was defined in subpart HH as a hydrocarbon liquid with an API gravity less than 40 degrees and a GOR less than 0.31 m^3/liter of liquid.

Several commenters questioned the EPA's basis for the black oil definition. The commenters requested that the EPA revise the GOR and API gravity cutoffs. One commenter stated that it was unclear whether the definition of black oil, with the proposed cutoffs, was a determination related to human health risk.

During the development of the proposal, representatives of the oil and natural gas production industry stressed that their industry was composed of large numbers of facilities that handle black oil, and that black oil was not a significant contributor to overall source category HAP emissions. The EPA reviewed the available information and agreed with the industry representatives that facilities that exclusively handle black oil are not significant contributors to overall HAP emissions from the source category. Furthermore, the EPA did not identify control technologies, designed to reduce HAP, in use at existing facilities that exclusively process, handle, or store black oil. Therefore, the EPA determined that the MACT floor for black oil facilities was no control. This determination was not made based on the health risks associated with black oil.

The EPA developed the proposed definition of black oil based on a series of technical articles that describe five basic hydrocarbon fluids that typically exist in a reservoir: black oil, volatile oil, retrograde gas, wet gas, and dry gas (Air Docket A-94-04). Of these, black oil and volatile oil exist as liquid in the reservoir. Black oil, which is a mixture of chemical species ranging from methane to large, heavy, nonvolatile organic molecules, is in solution with dry gas, which is primarily methane. Volatile oil, which contains fewer heavy molecules, is in solution with retrograde gas, which has fewer of the heavy organic molecules.

According to these articles, reservoir fluid types are determined by rules-of-thumb based on an initial producing GOR, stock-tank liquid gravity, and stock tank liquid color. In particular, fluid type is usually determined by initial producing GOR and confirmed by stock tank gravity values and stock tank color. (Note: The distinction between initial producing GOR and producing GOR is important. As reservoir pressure reduces over time, the producing GOR for black oil increases. Therefore, if any other GOR is used, the facility may not appear to qualify for the exemption.) The rule-of-thumb for volatile oil is an initial producing GOR of 0.31 m^3/liter. Volatile oil is also suspected if the API gravity is equal to or greater than 40 degrees and a color that is brown, reddish, orange, or green. The rule-of-thumb for black oil is an initial producing GOR less than 0.31 m^3/liter, an API gravity of less than 45 degrees, and a color that is dark, usually black (sometimes with a greenish cast) or brown.

Since color determination is subjective, the EPA selected initial producing GOR and API gravity as quantifiable criteria for defining black oil. In addition, since there is a gap between the rule-of-thumb API gravity criteria for black oil and volatile oil, the EPA selected the lower, more conservative value of 40 degrees. The EPA believes that using a higher API gravity to define black oil, such as 45 or 50 degrees as recommended by the commenters, would increase the possibility that the liquid is a volatile oil, thus exempting sources that are likely to have higher HAP emissions. The EPA believes that the criteria for defining a black oil, which were obtained directly from widely recognized definitions of black oil and volatile oil used in the oil and natural gas industry, are technically sound for identifying which sources are included as black oil facilities. Therefore, the EPA has not modified the black oil definition.

2. Potential-to-Emit

Several commenters were concerned with the methods used to determine whether or not a facility was a major source. In particular, the EPA received several comment letters regarding the calculation of a facility's potential-to-emit (PTE) when determining a facility's major source status. The EPA received comments regarding the calculation of PTE on the following issues: (1) potential emissions calculated to determine major source status should consider controls and operational limitations whether or not they are federally enforceable as specified in the *National Mining Congress* v. *EPA* (59 F.3d.1351, D.C. Cir. 1995) court case; (2) potential emissions should not be based on equipment operating capacity because it would result in overregulation, but should consider the inherent operating limitations of the facility (e.g., declining production levels over time); (3) the EPA should provide a simplified approach to calculate PTE, which takes into account design and operational limitations; and (4) the EPA should use the logic in the PTE Transition policy where sources with low emissions may be considered nonmajor if records of actual emissions are maintained.

a. *Use of Limitations in Calculating PTE.* The EPA received comments requesting that potential emissions calculated to determine major source status should consider controls and operational limits whether or not they are federally enforceable.

The EPA believes that by referring to the definition of PTE in § 63.2 of subpart A, subparts HH and HHH contain the provisions for accounting for control

devices and federally enforceable operating limitations as requested by the commenters.

With respect to the *National Mining* court case, the court required the EPA to reconsider the Federal enforceability requirement, but did not vacate the requirement. As a result, the requirement for Federal enforceability is still in effect. The definition of PTE for the NESHAP program (40 CFR 63.2) is currently under review, and the EPA is engaged in a rulemaking process to amend the requirements in the General Provisions. The EPA has not modified subparts HH and HHH in response to these comments.

b. *Use of Inherent Design and Operational Limitations in Calculating PTE.* Several commenters were concerned that PTE estimates, as defined in the General Provisions, would be unrealistically high and would subject many small insignificant sources to the NESHAP requirements. The commenters requested that PTE be based on the inherent design and operational limitations of production and transmission and storage facilities, such as throughput rates.

According to commenters, the throughput of oil and natural gas production operations declines over time, and existing equipment is often designed, constructed and operated based on high initial production rates. Therefore, the commenters suggested that the facilities are usually operated at actual throughput rates that are much lower than the design capacities.

The EPA agrees that there are certain inherent throughput limitations associated with the production of oil and natural gas, primarily related to declining production rates. Therefore, the final subpart HH specifies a method for calculating maximum facility throughput to determine major source status and applicability to subpart HH. This method is based on a facility's past production rate and ability to document declining annual operations. However, it is the responsibility of the owner or operator to be aware of changes that could require a facility to recalculate its PTE and to do so in a timely manner. The owner or operator could be found in violation back until the point in time at which an engineering judgement would have shown that the facility was reasonably capable of emitting at major source thresholds. A detailed discussion is presented in section 2.1.1 of the BID volume 2.

The EPA also received comments that the EPA should consider the seasonal operation of natural gas storage facilities in estimating potential emissions, and that the facility's PTE cannot be based on withdrawal for the entire season at maximum capacity. The commenters explained that natural gas storage facilities must spend part of the year injecting gas, and that withdrawal rates decrease as the storage field's pressure drops.

The EPA agrees that natural gas storage facilities have inherent limitations due to the nature of their operations. Therefore, the final rule (subpart HHH) contains a method for calculating maximum facility throughput to determine major source status and applicability of subpart HHH. The method is based on the maximum withdrawal and injection rates and the working gas capacity for a given storage field. A more detailed discussion is presented in section 2.1.1 of BID volume 2.

c. *Simplified Approach to Calculate PTE.* Several commenters recommended a simplified approach to calculating PTE, such as screening equations similar to those developed for other NESHAP, to take into account design and operational limitations.

The EPA evaluated the use of an equation similar in structure to the Gasoline Distribution NESHAP, 40 CFR part 63, subpart R. After extended effort, the EPA found that the number of variables was too extensive to allow development of a manageable equation. The EPA also received supplemental comments from industry and trade associations indicating that their efforts in developing such an equation resulted in the same outcome (Air Docket A-94-04).

Therefore, as an alternative, the EPA developed a simplified major source determination (MSD) for HAP emission sources in the oil and natural gas production and natural gas transmission and storage source categories. The simplified MSD allows the owner or operator of a facility to easily determine (1) if they are major sources and whether NESHAP requirements apply to their facility, and (2) if they are required to obtain a title V operating permit.

Therefore, the final subpart HH states that facilities, prior to the point of custody transfer, that have a facilitywide actual annual average natural gas throughput less than 18.4 thousand m^3/day and a facilitywide actual annual average hydrocarbon liquid throughput less than 39,700 liter/day are exempt from subpart HH. A more detailed discussion on the development of this MSD is presented in section 2.1.1 of the BID volume 2.

Owners and operators of production facilities, after the point of custody transfer (including natural gas processing plants), must aggregate emissions from all HAP emissions units at the facility when determining whether or not the facility is a major source. Production facilities, after the point of custody transfer, are likely to have emission units in addition to glycol dehydration units and storage vessels, such as amine treaters and sulfur recovery units that are typically located at natural gas processing plants. Since these emissions units must be included in the total emissions for the facility, the EPA could not develop a cutoff that would reasonably ensure that sources operating below such a cutoff would not be major sources. Therefore, production facilities located after the point of custody transfer, including natural gas processing plants, do not qualify for the simplified major source determination.

Using the same procedure, the EPA developed an MSD for natural gas transmission and storage facilities where glycol dehydration units are the only HAP emission points. The final subpart HHH states that natural gas transmission and storage facilities operating with an actual annual average natural gas throughput below 28.3 thousand m^3/day are exempt from subpart HHH.

d. *Use of PTE Transition Policy.* Under the EPA's 1995 Potential to Emit Transition Policy, sources with low emissions (e.g., less than 50 percent of major source thresholds) may be deemed nonmajor if records of actual emissions are kept. Several commenters suggested the use of written documentation of physical and operational limitations that would be federally, State, or otherwise practically enforceable.

In the January 25, 1995 policy memorandum entitled "Options for Limiting the Potential to Emit (PTE) of a Stationary Source Under Section 112 and Title V of the Clean Air Act (Act)," the EPA issued a transition policy for section 112 and title V. The transition policy addressed concerns that some sources may face gaps in the ability to acquire federally enforceable PTE limits because of delays in State adoption or EPA approval of programs or in their implementation. In order to ensure that such gaps would not create adverse consequences for States or for sources, the EPA provided that, during a 2-year period extending from January 1995 through January 1997, sources lacking federally enforceable limitations, State and local air regulators had the option of treating the following types of sources as non-major under section 112 and in their title V programs: (1) sources that maintain adequate records to demonstrate that their actual emissions

are less than 50 percent of the applicable major source threshold and have continued to operate at less than 50 percent of the threshold since January 1994, and (2) sources with actual emissions between 50 and 100 percent of the major source threshold but which hold State-enforceable limits that are enforceable as a practical matter. On August 27, 1996, the transition policy was extended until July 31, 1998. On July 10, 1998, in a memorandum entitled "Second Extension of January 25, 1995 Potential to Emit Transition Policy and Clarification of Interim Policy," the EPA announced a second extension of the transition policy. The extensions were provided because the EPA is engaged in a rulemaking process to consider amendments to the current PTE requirements. Currently, the PTE rulemaking, which will address the PTE requirements in the General Provisions (40 CFR part 63, subpart A) and the title V operating permits program, has not been completed. Those rule amendments will affect federal enforceability requirements for PTE limits under these programs. Thus, there will continue to be uncertainty with respect to federally enforceable limits. Therefore, in the July 10, 1998 memorandum, the EPA extended the transition policy until December 31, 1999, or until the effective date of the final rule in the PTE rulemaking, whichever is sooner.

The EPA expects that the rulemaking will be completed before December 31, 1999, and owners and operators will have the option of complying with the PTE rulemaking as well as the procedures specified in subparts HH and HHH.

D. Glycol Dehydration Unit Process Vent Standards

The proposed standards required a 95.0 percent control efficiency for all control devices, but did not specify over which averaging period the 95.0 percent should be determined. By not specifying an averaging period, the proposed rule required continuous compliance for all control devices. The EPA received several comment letters requesting that the EPA specify an averaging period. The commenters were particularly concerned that condensers could not achieve a 95.0 percent control efficiency on a continuous basis and that additional controls would be required to ensure compliance with the 95.0 percent requirement.

The commenters' primary point was that condensers are significantly affected by changes in ambient temperature. According to the commenters, when the ambient temperature is high, the condensers are less efficient. The commenters were concerned that during the warm summer months, condensers would not meet the control requirements. Therefore, the commenters specifically requested either a 30-day or a 12-month averaging period for compliance with the control requirements to balance changes in ambient temperature. In support of this request, the commenters maintained that using a longer averaging period would create no significant change in the emissions to the environment, but would substantially decrease the number of technical violations of the standard and reduce the administrative burden for the industry and the EPA.

The EPA reviewed the control efficiency and averaging period requirements in response to these comments. Based on the Agency's review of the possible options, today's rules require 95.0 percent control as a daily average. As an alternative for owners or operators that install condensers, the EPA has modified subpart HH to allow 95.0 percent condenser control as a 365-day rolling average, based on daily average condenser efficiency as a function of condenser outlet temperature (i.e., at the end of each operating day, the owner or operator calculates the daily average condenser outlet temperature, then calculates the 365-day average control efficiency for the preceding 365 days, including the current operating day).

Based on the information collected under the authority of section 114 of the Act, the comments received during the public comment period, and site visits, the EPA believes that an averaging period shorter than 365 days is appropriate for the natural gas transmission and storage source category. To the Agency's knowledge, glycol dehydration units located at storage facilities do not typically operate throughout the year. Therefore, the EPA was concerned that it would take more than 1 calendar year for a facility to obtain 365 days of data. Additionally, glycol dehydration units located at these sources do not typically operate during the warm summer months when condenser efficiency is lower. Although transmission facilities do operate for most of the year, the EPA believes that the HAP emission units in operation at these facilities are primarily compressors, and that most glycol dehydration units located at these facilities are used for withdrawing natural gas from storage (i.e., not likely to operate year-round). Therefore, for condensers installed on glycol dehydration units subject to control requirements under subpart HHH, the EPA has modified the requirements to specify that owners or operators that install condensers have the option of meeting a 95.0 percent control efficiency as a 30-day rolling average.

Several commenters requested that the EPA allow for combinations of controls and process modifications to achieve the required control efficiency. The commenters provided several suggestions for modifying the language in § 63.765(c)(2) stating that the owner or operator could reduce emissions from the glycol dehydration unit by 95.0 percent through process modifications or process modifications with controls. In addition, one of the suggestions was to include language allowing the owner or operator to complete a one-time compliance demonstration for the process modification.

The EPA agrees that owners or operators should be allowed to achieve a 95.0 percent emission reduction using process modifications or combinations of process modifications and one or more control devices. Therefore, today's rules contain requirements for demonstrating compliance with a 95.0 percent emission reduction using process modifications or a combination of process modifications and one or more control devices. In particular, the final rule requires the owner or operator to demonstrate how emissions have been reduced and to what level, and that the facility continues to be operated such that the 95.0 percent emission reduction is maintained.

The EPA does not believe that a one-time compliance demonstration would ensure future or continuous compliance, and the EPA believes that it is not appropriate. Therefore, the EPA has not included the commenter's suggested language allowing a one-time compliance demonstration for process modification. Instead, the final rules require the owner or operator to document facility operations and to provide this information in the Periodic reports.

E. Storage Vessel Standards

The criteria for an API gravity equal to or greater than 40 degrees or an initial producing GOR equal to or greater than 0.31 m3/liter were used in the proposed rule to define storage vessels with the potential for flash emissions. Prior to proposal, the EPA's analysis of storage vessels that contain hydrocarbon liquids that have an API gravity or an initial producing GOR higher than these criteria indicated the potential for significant flash emissions.

The EPA received comment letters objecting to the proposed cutoffs for storage vessels with the potential for flash emissions. In order to demonstrate their objection to the technical basis for these exemption criteria, the commenters provided emissions estimates for tanks containing hydrocarbon liquids with an API gravity less than 40 degrees and GOR of less than 0.31 m^3/liter. According to the emission estimates, these tanks, which do not meet the criteria for a storage vessel with the potential for flash emissions and would be exempt from the storage vessel control requirements, had significant HAP emissions. The EPA also received emission estimates for a tank containing a hydrocarbon liquid with an API gravity greater than 40 degrees and a GOR greater than 0.31 m^3/liter. According to the analysis provided by the commenter, this tank would be subject to the storage vessel control requirements but had no flash emissions.

The commenters did not provide alternative suggestions for defining storage vessels with the potential for flash emissions, other than recommending that "the proposed storage tank exemption/control criteria be based on credible engineering methods supported by fundamental principles of fluid phase behavior."

The EPA developed the definition for storage vessels with the potential for flash emissions based on criteria (i.e., API gravity and GOR) that were easily recognized by industry personnel and relatively easy to obtain. Furthermore, these criteria are based on hydrocarbon liquid characteristics.

According to section 112(d)(1), the Administrator is required to establish emission standards for each category of major sources. Section 112(d)(1) states that "[T]he Administrator may distinguish among classes, types, and sizes of sources within a category or subcategory in establishing such standards * * *." Furthermore, section 112(d)(3) states that emission standards for existing sources in a category may be no less stringent than the MACT floor.

As stated in section V.C.1 of this preamble, the EPA has established that among the class of sources referred to as black oil facilities, the MACT floor is no control. For the class of sources defined as storage vessels with the potential for flash emissions (which includes storage vessels that do not process black oil), the EPA evaluated "* * * the average emission limitation achieved by the best performing 12 percent of the existing sources (for which the Administrator has emissions information) * * *" (section 112(d)(3)(A) of the Act). The EPA determined that the top 12 percent of existing storage vessels with the potential for flash emissions were controlled.

The EPA recognizes that there could be specific situations, such as the ones analyzed by the commenters, where emissions of an exempted stream are higher than those of a non-exempted stream. In addition, there are many factors that affect whether flash emissions occur (e.g., pressure drop between two tanks, liquid vapor pressure, etc.). However, the EPA believes that this approach identifies hydrocarbon liquids that have a potential for significant flash emissions under conditions representative of industry operations.

In today's rule (final subpart HH), the EPA has added the throughput cutoff criterion to the storage vessels with the potential for flash emissions definition. The final rule states that a storage vessel with the potential for flash emissions is defined as a storage vessel that contains a hydrocarbon liquid with a stock tank GOR equal to or greater than 0.31 m3/liter and an API gravity equal to or greater than 40 degrees, and an actual annual average hydrocarbon liquid throughput equal to or greater than 79,500 liter/day. By adding the throughput criterion to the definition of storage vessels with the potential for flash emissions, rather than as a cutoff specified in proposed § 63.764(c)(2), storage vessels that do not meet the criteria for a storage vessel with the potential for flash emissions are not considered affected sources in the final rule and are not included in a facility's PTE calculation for determining major source status. The EPA believes that based on representative industry operations, the 40 degrees, 0.31 m^3/liter and the 79,500-liter/day exemption criteria are appropriate for defining storage vessels with the potential for flash emissions.

F. Standards for Natural Gas Transmission and Storage

The EPA received several comment letters expressing concern for the EPA's proposed standard for the natural gas transmission and storage source category. The commenters stated that the EPA did not have sufficient data to develop standards for the natural gas transmission and storage source category. The commenters requested that the EPA delay the natural gas transmission and storage portion of the proposed rulemaking to properly survey the industry for more meaningful data and assess whether a standard for the natural gas transmission and storage source category is necessary or achievable.

Several commenters explained that a review of the background information for proposed subpart HHH showed that the database consisted of information on the methods used in natural gas transmission from only two companies and no underground storage facilities. The commenters noted that the companies surveyed were predominately oil production facilities that handled gas as a by-product of oil production and that have higher HAP emissions because they handle more liquids with higher concentrations of HAP.

In response to these comments, the EPA collected additional data on glycol dehydration units in the natural gas transmission and storage source category through site visits and requests for information under the authority of section 114 of the Act.

Through these site visits and survey questionnaires, the EPA collected information from 83 facilities in the natural gas transmission and storage source category. The EPA considered this new information, along with the previously collected information on the natural gas transmission and storage source category, in developing a MACT floor for existing and new process vents on glycol dehydration units located at facilities in this source category. The EPA also used this information to better characterize processes and operations at natural gas transmission and storage facilities.

As stated in the January 15, 1999 supplemental notice (64 FR 2611), the additional data supported a MACT floor of 95.0 percent for existing and new natural gas transmission and storage facilities. In addition, the EPA announced that the Agency was considering raising the proposed throughput cutoff of 85 thousand m^3/day to 283 thousand m^3/day on an actual annual average basis. Glycol dehydration units operating below this cutoff would not be required to install controls under subpart HHH. The data did not warrant a change in the benzene emission cutoff of 0.90 Mg/yr.

The public comment period closed on February 16, 1999. The EPA received four comment letters in response to the EPA's request for comments and supporting information on the consideration of a 95.0 percent HAP emission reduction as the floor level of control, on the 283 thousand m^3/day natural gas throughput cutoff and the 0.90-Mg/yr benzene emission cutoff. The commenters agreed that exempting glycol dehydration units with actual annual average natural gas throughputs

less than 283 thousand 78m³/day and with actual average benzene emissions less than 0.90 Mg/yr from the control requirements under subpart HHH was appropriate.

However, the commenters indicated that they did not agree with a MACT floor of 95.0 percent for the transmission and storage source category. The commenters requested that the final rule should either exempt existing sources controlled by condensers, or require that existing sources controlled with condensers be controlled to a different level (i.e., 70 percent) than the combustion technology-based MACT floor. The commenters stated that condensers could consistently achieve a 75 percent emission reduction and that requiring an additional 20 percentage-points of emission reduction in HAP would be inconsistent with the cost-to-benefit analysis in the February 6, 1998 proposal.

The EPA does not believe that it is necessary to provide exemptions or alternative levels of control for existing glycol dehydration units that are controlled by condensers. The EPA believes that this would not be consistent with the Act, which specifies in section 112(d)(3) that for a source category with 30 or more sources (such as the transmission and storage source category), the MACT floor for existing sources shall not be less stringent than "* * * the average limitation achieved by the best performing 12 percent of the existing sources * * *." The data collected by the EPA indicated that the average limitation achieved by the top 12 percent of the existing glycol dehydration units located at natural gas transmission and storage facilities was 95.0 percent. Furthermore, the data indicated that the top 12 percent of the existing glycol dehydration units were controlled using combustion or a combination of combustion and condensation. Therefore, in accordance with the statute, the EPA established the MACT floor to be 95.0 percent for glycol dehydration units located at natural gas transmission and storage facilities, which corresponds to combustion.

However, the EPA agrees that the supplemental notice did not address the issue of averaging period for condensers in use at transmission and storage facilities. As stated in this preamble, the final rule allows an owner or operator that installs a condenser for control of HAP from glycol dehydration unit process vents to establish compliance with the 95.0 percent HAP emission reduction on a 30-day rolling average. In addition, the final rule allows the owner or operator to comply with one of the following: (1) 95.0 percent HAP emission reduction, (2) 20 ppmv outlet HAP concentration for combustion devices, or (3) outlet emissions of 0.90 Mg/yr of benzene. The EPA believes that the 0.90 Mg/yr benzene emission limit and the 30-day averaging period for condensers provides sufficient flexibility for owners and operators of existing controlled glycol dehydration units. A more detailed discussion regarding the EPA's responses to the comments received on the supplemental notice are presented in the BID volume 2.

G. Monitoring, Recordkeeping, and Reporting Requirements

The EPA received several comment letters claiming that the recordkeeping and reporting requirements of the proposed rule were extremely burdensome. The commenters requested that the EPA reduce the monitoring, recordkeeping, and reporting burden associated with the proposed rule. In particular, commenters were concerned that remote and unmanned facilities would be overburdened by the proposed monitoring, recordkeeping and reporting requirements. Commenters also requested that provisions be added to the rule to avoid duplicative reporting. Other commenters requested that flexibility to allow alternative monitoring, recordkeeping, and reporting be incorporated into the final rule.

The EPA recognizes that unnecessary monitoring, recordkeeping, and reporting requirements would burden both the source and enforcement agencies. Prior to proposal, the EPA attempted to reduce the amount of monitoring, recordkeeping, and reporting to only that which is necessary to demonstrate compliance.

Although the EPA has not removed the monitoring requirements for unmanned or remote facilities, the EPA did evaluate the possibility of reducing the requirements for unmanned facilities. The EPA concluded, however, that the monitoring requirements are the minimum necessary to ensure that control devices are operating to ensure compliance.

The EPA reevaluated whether monitoring, recordkeeping, and reporting requirements could be further reduced while maintaining the enforceability of the rule. Therefore, the EPA has made the following changes in the promulgated rule to further reduce the monitoring, recordkeeping, and reporting burden.

(1) Almost all reports have been consolidated into the Notification of Compliance Status report and the Periodic reports.

(2) If multiple tests are conducted for the same kind of emission point, using the same test method, only one complete test report is required to be submitted along with the summaries of the results of other tests.

(3) Site-specific test plans describing quality assurance in § 63.7(c) of 40 CFR part 63, subpart A, are not specifically required in the individual subparts because the test methods cited in subparts HH and HHH already contain applicable quality assurance protocols. It should be noted that the Administrator would still have the authority to request a test plan.

(4) Periodic reports are required to be submitted semiannually for all facilities (the proposal required quarterly reports if monitored parameters were out of range more than a specified percentage of time).

(5) A reduction in the record retention requirements for monitored parameters. The proposal required values of monitored parameters to be recorded every 15 minutes and all 15-minute records had to be retained. The final rule requires monitored parameters to be recorded every hour and all hourly records to be retained.

Several commenters were concerned with the provisions specifying the accuracy of the measurement devices used to comply with the subpart and requested that the EPA change or remove the accuracy requirements.

The EPA believes that accuracy requirements are necessary to demonstrate ongoing compliance. Furthermore, if the accuracy requirements were removed, additional recordkeeping and reporting requirements would be necessary to ensure that less accurate monitors were not installed after the performance tests. However, the EPA agrees with the commenters that the accuracy levels could be slightly less restrictive. Therefore, the EPA has changed the accuracy levels from ±1 percent of the temperature being monitored, in °C or ±0.5 °C, to ±2 percent of the temperature being monitored, in °C or ±2.5 °C, whichever is greater.

H. Cost and Economic Impacts

The EPA specifically requested comments on the cost impact and the production recovery credits as discussed in section IV of the preamble to the proposal (63 FR 6297), along with supporting documentation. The EPA received comment letters stating that the EPA had underestimated the costs of controls, had underestimated the cost of treating produced water, and had

overstated the quantity of product recovered that could be sold to offset the costs associated with subpart HH. Of specific concern was the closure of smaller facilities due to the rule.

The EPA based its cost estimates for control devices on published installed control system costs from the Ventura County (California) Air Pollution Control District (APCD) (Air Docket A-94-04). These costs were associated with a glycol dehydration unit regulation issued by the Ventura County APCD. According to this information, the cost of installing a condenser control system does not vary significantly based on the size (capacity) of a glycol dehydration system.

Approximately 20 billion barrels per year of produced water are generated by the oil and natural gas production source category (Air Docket A-94-04). Using an emission model developed by the Gas Research Institute (GRI-GLYCalc, version 3.0) to determine the amount of produced water generated by the number of facilities estimated to be affected by subpart HH, the EPA calculated that the oil and natural gas production NESHAP would result in an increase in produced water production of approximately 590,000 barrels per year. A GRI report (GRI Publication Number GRI-96/0049) indicated that produced water would be typically handled along with other produced water streams, either by underground injection control, surface impoundment, or other miscellaneous methods. Thus, the EPA believes that the final NESHAP would have a minimal impact on existing produced water disposal costs and that the estimated NESHAP control costs are, therefore, reasonable.

The EPA based its national cost estimate impacts on the estimated number of facilities that would be impacted by the regulatory provisions of subparts HH and HHH, along with detailed emission control cost estimates per HAP emission point (Air Docket A-94-04). In addition, the monitoring, recordkeeping, and reporting (MRR) costs were based on a detailed analysis of the regulatory requirements of subparts HH and HHH. The EPA currently believes that the MRR cost estimates accurately reflect the estimated effort required to address MRR requirements in the final NESHAP.

Further, the EPA expects that the 85 thousand m^3/day size cutoff will prevent the premature closure of a large number of small and often marginal well operations. Not accounting for this size cutoff would contribute to differences in the estimated reduction in natural gas production and employment losses associated with the standards.

As described in Section 4 of the economic impact analysis report, the EPA's economic model determines production and closure decisions on the basis of a producing field (i.e., a group of similar wells) that is consistent with commenters concerns that "production decisions are made on a well-by-well or project basis and if an individual project's profits fall below its break-even point, that the well will be abandoned." The EPA did not estimate losses of economically producible natural gas reserves. The economic analysis conducted by the EPA is unable to address possible impacts on production from future natural gas reserves. However, based on the negligible impact on current natural gas production associated with the EPA's engineering estimate of compliance cost, it is not expected that these impacts would be as great as indicated by the commenter.

VI. Administrative Requirements

A. Docket

The docket for these rulemakings is A-94-04. The docket is an organized and complete file of all the information considered by the EPA in the development of these rulemakings. The principal purposes of the docket are (1) to allow interested parties a means to identify and locate documents so that they can effectively participate in the rulemaking process and (2) to serve as the record in case of judicial review (except for interagency review materials) [section 307(d)(7)(A) of the Act]. This docket contains copies of the regulatory texts, BID volumes 1 and 2, references not readily available to the public, and technical memoranda documenting the information considered by the EPA in the development of the rules. The docket is available for public inspection at the EPA's Air and Radiation Docket and Information Center, the location of which is given in the **ADDRESSES** section of this notice.

B. Paperwork Reduction Act

The information collection requirements in these rules have been submitted for approval to the Office of Management and Budget (OMB) under the Paperwork Reduction Act, 44 U.S.C. 3501 *et seq.* Information collection request (ICR) documents have been prepared by the EPA (ICR Nos. 1788.02 and 1789.02) and copies may be obtained from Sandy Farmer, OPPE Regulatory Information Division; U.S. Environmental Protection Agency (2137); 401 M Street, SW; Washington, DC 20460 or by calling (202) 260-2740. The information requirements are not effective until OMB approves them.

Information is required to ensure compliance with the provisions of the final rules. If the relevant information were collected less frequently, the EPA would not be reasonably assured that a source is in compliance with the final rules. In addition, the EPA's authority to take administrative action would be reduced significantly.

The final rules require that facility owners or operators retain records for a period of 5 years, which exceeds the 3 year retention period contained in the guidelines in 5 CFR 1320.6. The 5 year retention period is consistent with the provisions of the General Provisions of 40 CFR part 63, and with the 5 year records retention requirement in the operating permit program under title V of the Act.

All information submitted to the EPA for which a claim of confidentiality is made will be safeguarded according to the EPA policies set forth in title 40, chapter 1, part 2, subpart B, Confidentiality of Business Information. See 40 CFR part 2; 41 FR 36902, September 1, 1976; amended by 43 FR 3999, September 8, 1978; 43 FR 42251, September 28, 1978; and 44 FR 17674, March 23, 1979. Even where the EPA has determined that data received in response to an ICR are eligible for confidential treatment under 40 CFR part 2, subpart B, the EPA may nonetheless disclose the information if it is "relevant in any proceeding" under the statute (42 U.S.C. 7414(C); 40 CFR 2.301(g)). The information collection complies with the Privacy Act of 1974 and OMB Circular 108.

Information to be reported consists of emission data and other information that are not of a sensitive nature. No sensitive personal or proprietary data are being collected.

The estimated annual average hour burden for the final oil and natural gas production NESHAP is 56 hours per respondent. The estimated annual average cost of this burden is $2,400 for each of the estimated 484 existing and new (projected) respondents.

The estimated annual average hour burden for the final natural gas transmission and storage NESHAP is 30 hours per respondent. The estimated annual average cost of this burden is $1,300 for each of the estimated 7 existing respondents.

Reports are required on a semiannual basis and as required, as in the case of startup, shutdown, and malfunction plans. Burden means the total time, effort, or financial resources expended by persons to generate, maintain, retain, or disclose or provide information to or

for a Federal agency. This includes the time needed to review instructions; to develop, acquire, install, and utilize technology and systems for the purposes of collecting, validating, and verifying information, processing and maintaining information, and disclosing and providing information; to adjust the existing ways to comply with any previously applicable instructions and requirements; to train personnel to be able to respond to a collection of information; to search data sources; to complete and review the collection of information; and transmit or otherwise disclose the information.

An agency may not conduct or sponsor, and a person is not required to respond to, a collection of information unless it displays a currently valid OMB control number. The OMB control numbers for the EPA's regulations are listed in 40 CFR part 9 and 48 CFR chapter 15. The EPA is amending the table in 40 CFR part 9 of currently approved ICR control numbers issued by OMB for various regulations to list the information requirements contained in these final rules.

C. Executive Order 12866: A Significant Regulatory Action Determination

Under Executive Order 12866, "Regulatory Planning and Review," (58 FR 5173 (October 4, 1993)), the EPA must determine whether the regulatory action is "significant" and therefore subject to OMB review and the requirements of the Executive Order. The criteria set forth in section 1 of the Order for determining whether a regulation is a significant rule are as follows: (1) is likely to have an annual effect on the economy of $100 million or more, or adversely and materially affect a sector of the economy, productivity, competition, jobs, the environment, public health or safety, or State, local or tribal governments or communities; (2) is likely to create a serious inconsistency or otherwise interfere with an action taken or planned by another agency; (3) is likely to materially alter the budgetary impact of entitlements, grants, user fees or loan programs, or the rights and obligations of recipients thereof; or (4) is likely to raise novel legal or policy issues arising out of legal mandates, the President's priorities, or the principles set forth in the Executive Order.

Pursuant to Executive Order 12866, OMB has reviewed these rules. Changes made in response to OMB suggestions or recommendations are documented in the public record.

D. Regulatory Flexibility Act

The Regulatory Flexibility Act (RFA) generally requires an agency to conduct a regulatory flexibility analysis of any rule subject to notice and comment rulemaking requirements, unless the agency certifies that the rule will not have a significant economic impact on a substantial number of small entities. Small entities include small businesses, small not-for-profit enterprises, and small governmental jurisdictions. These final rules will not have a significant economic impact on a substantial number of small entities. According to *Wards Business Directory* (1993), there are 1,152 firms in the seven affected Standard Industrial Classification (SIC) codes and 735 of these firms meet the Small Business Administration (SBA) definition of a small entity.

The number of affected small entities for these rules is likely to be minimal due to several considerations in these rules that minimize the burden on all firms, both small and large. These considerations include exempting from the control requirements of the oil and natural gas production NESHAP those glycol dehydration units located at major sources with (1) an actual flowrate of natural gas to the glycol dehydration unit less than 85 thousand m^3/day, on an annual average basis, or (2) benzene emissions less than 0.90 Mg/yr. Also, these considerations include exempting from the control requirements of the natural gas transmission and storage NESHAP those glycol dehydration units located at major sources with (1) an actual flowrate of natural gas to the glycol dehydration unit less than 283 thousand m^3/day, on an annual average basis; or (2) benzene emissions less than 0.90 Mg/yr.

In a screening of potential impacts on a sample of small entities, the EPA found that there are minimal impacts on these entities. The weighted average of control costs as a percent of sales is 0.09 of 1 percent for the small firms in the sample, while a maximum value of 1.1 percent results for only two of these firms. The analysis also indicates that with the regulations, the change in measures of profitability are minimal (i.e., 0.11 of 1 percent change in the cost-to-sales ratio for small firms), and there are no indications of financial failures or employment losses for both small and large firms. The screening analysis for these rules is detailed in the Economic Impact Analysis (see Docket No. A-94-04).

E. Congressional Review Act

The Congressional Review Act, 5 U.S.C. 801 *et seq.*, as added by the Small Business Regulatory Enforcement Fairness Act of 1996, generally provides that before a rule may take effect, the agency promulgating the rule must submit a rule report, which includes a copy of the rule, to each House of the Congress and to the Comptroller General of the United States. The EPA will submit a report containing this rule and other required information to the U.S. Senate, the U.S. House of Representatives, and the Comptroller General of the United States prior to publication of the rule in the **Federal Register**. A major rule cannot take effect until 60 days after it is published in the **Federal Register**. This action is not a "major rule" as defined by 5 U.S.C. 804(2). This rule will be effective June 17, 1999.

F. Unfunded Mandates Reform Act

Title II of the Unfunded Mandate Reform Act of 1995 (UMRA), Pub. L. 104-4, establishes requirements for Federal agencies to assess the effects of their regulatory actions on State, local, and tribal governments and the private sector. Under section 202 of the UMRA, the EPA generally must prepare a written statement, including a cost-benefit analysis, for proposed and final rules with "Federal mandates" that may result in expenditures to State, local, and tribal governments, in the aggregate, or to the private sector, of $100 million or more in any 1 year. Before promulgating an EPA rule for which a written statement is needed, section 205 of the UMRA generally requires the EPA to identify and consider a reasonable number of regulatory alternatives and adopt the least-costly, most cost-effective, or least-burdensome alternative that achieves the objectives of the rule. The provisions of section 205 do not apply when they are inconsistent with applicable law. Moreover, section 205 allows the EPA to adopt an alternative other than the least-costly, most cost-effective, or least-burdensome alternative if the Administrator publishes with the final rule an explanation why that alternative was not adopted. Before the EPA establishes any regulatory requirements that may significantly or uniquely affect small governments, including tribal governments, it must have developed under section 203 of the UMRA a small government agency plan. The plan must provide for notifying potentially affected small governments, enabling officials of affected small governments to have meaningful and timely input in

the development of the EPA regulatory proposals with significant Federal intergovernmental mandates, and informing, educating, and advising small governments on compliance with the regulatory requirements.

The EPA has determined that today's final rules do not include a Federal mandate that may result in expenditures of $100 million of more for State, local, and tribal governments, in the aggregate, or the private sector in any 1 year. Therefore, the requirements of the Unfunded Mandates Reform Act do not apply to today's final rules.

G. Executive Order 12875, Enhancing the Intergovernmental Partnership

Under Executive Order 12875, the EPA may not issue a regulation that is not required by statute and that creates a mandate upon a State, local or tribal government unless the Federal government provides the funds necessary to pay the direct compliance costs incurred by those governments, or the EPA consults with those governments. If the EPA complies by consulting, Executive Order 12875 requires the EPA to provide OMB a description of the extent of the EPA's prior consultation with representatives of affected State, local and tribal governments, the nature of their concerns, copies of any written communications from the governments, and a statement supporting the need to issue the regulation. In addition, Executive Order 12875 requires the EPA to develop an effective process permitting elected officials and other representatives of State, local and tribal governments to provide meaningful and timely input in the development of regulatory proposals containing significant unfunded mandates.

Today's rules do not create a mandate on the State, local or tribal governments. These rules do not impose any enforceable duties on these entities. Accordingly, the requirements of Section 1(a) of Executive Order 12875 do not apply to these rules. The EPA, nevertheless, involved State and local governments in their development of the final rules.

H. Executive Order 13045: Protection of Children From Environmental Health Risks and Safety Risks

Executive Order 13045, "Protection of Children from Environmental Health Risks and Safety Risks," (62 FR 19885, April 23, 1997) applies to any rule that: (1) the EPA determines is economically significant as defined under Executive Order 12866, (2) concerns an environmental health or safety risks, and (3) the EPA has any reason to believe may disproportionately affect children. If the regulatory action meets these criteria, the EPA must evaluate the environmental health or safety effects of the planned rule on children, and explain why the planned regulation is preferable to other potentially effective and reasonably feasible alternatives considered by the EPA.

The EPA interprets Executive Order 13045 as applying only to those regulatory actions that are based on health or safety risks, such that the analysis required under section 5.501 of the Order has the potential to influence the regulation. These rules are not subject to Executive Order 13045 for two reasons: (1) the rule is based solely on technology performance; and (2) no alternative technologies have been identified that would provide greater stringency at a reasonable cost, therefore, an assessment of impacts on children would have no impact on the stringency decision.

I. Executive Order 13084: Consultation and Coordination With Indian Tribal Governments

Under Executive Order 13084, the EPA may not issue a regulation that is not required by statute, that significantly or uniquely affects the communities of Indian tribal governments, and that imposes substantial direct compliance costs on those communities unless the Federal Government provides the funds necessary to pay the direct compliance costs incurred by the tribal governments, or the EPA consults with those governments. If the EPA complies by consulting, Executive Order 13084 requires the EPA to provide to OMB, in a separately identified section of the preamble to the rule, a description of the extent of the EPA's prior consultation with representatives of affected tribal governments, a summary of the nature of their concerns, and a statement supporting the need to issue the regulation. In addition, Executive Order 13084 requires the EPA to develop an effective process permitting elected officials and other representatives of Indian tribal governments "to provide meaningful and timely input in the development of regulatory policies on matters that significantly or uniquely affect their communities."

Today's rules do not significantly or uniquely affect the communities of Indian tribal governments. The final rules do not create mandates upon tribal governments. Accordingly, the requirements of section 3(b) of Executive Order 13084 do not apply to these rules.

J. National Technology Transfer and Advancement Act

Section 12(d) of the National Technology Transfer and Advancement Act (NTTAA), Pub. L. 104–113 (March 7, 1996), directs all Federal agencies to use voluntary consensus standards in regulatory and procurement activities unless doing so would be inconsistent with applicable law or otherwise impracticable. Voluntary consensus standards are technical standards (e.g., materials specifications, test methods, sampling procedures, and business practices) developed or adopted by one or more voluntary consensus bodies. The NTTAA requires Federal agencies to provide Congress, through annual reports to OMB, with explanations when an agency does not use available and applicable voluntary consensus standards. This section summarizes the EPA's response to the requirements of the NTTAA for the analytical and test methods required by this final rule.

Consistent with the NTTAA, the EPA conducted a search to identify voluntary consensus standards. The search identified 16 voluntary consensus standards that appeared to have possible use in lieu of EPA standard reference methods. However, after reviewing available standards, the EPA determined that eight of the candidate consensus standards identified for measuring HAP or surrogate pollutant emissions subject to the emission standards in the rule would not be practical due to lack of equivalency, documentation, validation data and other important technical and policy considerations. Seven of the remaining candidate consensus standards are new standards under development that the EPA plans to follow, review, and consider adopting at a later date.

One consensus standard, ASTM Z7420Z, is potentially practical for EPA use in lieu of EPA Method 18 (See 40 CFR part 60, appendix A). At the time of the EPA's search, the ASTM standard was still under development and the EPA had provided comments on the method. The EPA also compared a draft of this ASTM standard to methods previously reviewed as alternatives to EPA Method 18 that were approved with specific applicability limitations. These methods are designated as ALT–017 and CTM–028 and available through EPA's Emission Measurement Center Internet site at www.epa.gov/ttn/emc/tmethods.html. The proposed ASTM Z7420Z standard is very similar to these approved alternative methods. When finalized and adopted by ASTM, the standard may be equally suitable for the same applications as the approved

alternatives. However, this rule does not adopt the ASTM standard since it is not practical to do so until the potential candidate is final and the EPA has review the final standard. The EPA plans to continue to follow the progress of the standard and will consider adopting the ASTM standard at a later date.

Similarly, the Gas Research Institute has developed a sampling method for glycol dehydration units, the "Atmospheric Rich/Lean Method for Determining Glycol Dehydrator Emissions" (GRI-95/0368.1). The development of this procedure included a field evaluation program and technical review by the EPA. A report documenting this procedure has been available to the public from the GRI since 1996. This procedure provides a simpler, cheaper, and technically appropriate means of determining HAP emissions from glycol dehydration unit process vents when direct measurement is necessary. Consistent with the Agency's commitment to reduce costs to the private sector where technically feasible and in accordance with Clean Air Act requirements, the EPA has included the "Atmospheric Rich/Lean Method for Determining Glycol Dehydrator Emissions" as an alternative control device performance test procedure.

This rule requires standard EPA methods known to the industry and States. Approved alternative methods also may be used with prior EPA approval.

List of Subjects in 40 CFR Part 63

Environmental protection, Air pollution control, Hazardous air pollutants, Black oil, Associated equipment, Storage vessels with the potential for flash emissions, Glycol dehydration units, Oil and natural gas production, Natural gas transmission and storage, Equipment leaks, Natural gas processing plant, Reporting and recordkeeping requirements.

Dated: May 14, 1999.

Carol M. Browner,

Administrator.

For the reasons set out in the preamble, title 40, chapter I, part 63 of the Code of Federal Regulations is amended as follows:

PART 63—NATIONAL EMISSION STANDARDS FOR HAZARDOUS AIR POLLUTANTS FOR SOURCE CATEGORIES

1. The authority citation for part 63 continues to read as follows:

Authority: 42 U.S.C. 7401, *et seq.*, as amended by Pub. L. 101-549, 104 Stat. 2399.

2. Part 63 is amended by adding subpart HH to read as follows:

Subpart HH—National Emission Standards for Hazardous Air Pollutants From Oil and Natural Gas Production Facilities

Sec.
63.760 Applicability and designation of affected source.
63.761 Definitions.
63.762 Startups, shutdowns, and malfunctions.
63.763 [Reserved]
63.764 General standards.
63.765 Glycol dehydration unit process vent standards.
63.766 Storage vessel standards.
63.767 [Reserved]
63.768 [Reserved]
63.769 Equipment leak standards.
63.770 [Reserved]
63.771 Control equipment requirements.
63.772 Test methods, compliance procedures, and compliance determinations.
63.773 Inspection and monitoring requirements.
63.774 Recordkeeping requirements.
63.775 Reporting requirements.
63.776 Delegation of authority.
63.777 Alternative means of emission limitation.
63.778 [Reserved]
63.779 [Reserved]
Appendix to Subpart HH—Tables

Subpart HH—National Emission Standards for Hazardous Air Pollutants From Oil and Natural Gas Production Facilities

§ 63.760 Applicability and designation of affected source.

(a) This subpart applies to the owners and operators of the emission points, specified in paragraph (b) of this section that are located at oil and natural gas production facilities that meet the specified criteria in paragraphs (a)(1) and either (a)(2) or (a)(3) of this section.

(1) Major sources of hazardous air pollutants (HAP) as determined using the maximum natural gas or hydrocarbon liquid throughput, as appropriate, calculated in paragraphs (a)(1)(i) through (a)(1)(iii) of this section. A facility that is determined to be an area source based on emission estimates using the maximum natural gas or hydrocarbon throughput calculated as specified in paragraphs (a)(1)(i) through (iii) of this section, but subsequently increases emissions or potential to emit above the major source levels (without first obtaining and complying with other limitations that keep its potential to emit HAP below major source levels), becomes a major source and must comply thereafter with all applicable provisions of this subpart starting on the applicable compliance date specified in paragraph (f) of this section. Nothing in this paragraph is intended to preclude a source from limiting its potential to emit through other appropriate mechanisms that may be available through the permitting authority.

(i) If the owner or operator documents, to the Administrator's satisfaction, a decline in annual natural gas or hydrocarbon liquid throughput, as appropriate, each year for the 5 years prior to June 17, 1999, the owner or operator shall calculate the maximum natural gas or hydrocarbon liquid throughput used to determine maximum potential emissions according to the requirements specified in paragraph (a)(1)(i)(A) of this section. In all other circumstances, the owner or operator shall calculate the maximum throughput used to determine whether a facility is a major source in accordance with the requirements specified in paragraph (a)(1)(i)(B) of this section.

(A) The maximum natural gas or hydrocarbon liquid throughput is the average of the annual natural gas or hydrocarbon liquid throughput for the 3 years prior to June 17, 1999, multiplied by a factor of 1.2.

(B) The maximum natural gas or hydrocarbon liquid throughput is the highest annual natural gas or hydrocarbon liquid throughput over the 5 years prior to June 17, 1999, multiplied by a factor of 1.2.

(ii) The owner or operator shall maintain records of the annual facility natural gas or hydrocarbon liquid throughput each year and upon request submit such records to the Administrator. If the facility annual natural gas or hydrocarbon liquid throughput increases above the maximum natural gas or hydrocarbon liquid throughput calculated in paragraph (a)(1)(i)(A) or (a)(1)(i)(B) of this section, the maximum natural gas or hydrocarbon liquid throughput must be recalculated using the higher throughput multiplied by a factor of 1.2.

(iii) The owner or operator shall determine the maximum values for other parameters used to calculate emissions as the maximum for the period over which the maximum natural gas or hydrocarbon liquid throughput is determined in accordance with paragraph (a)(1)(i)(A) or (B) of this section. Parameters shall be based on either highest measured values or annual average.

(2) Facilities that process, upgrade, or store hydrocarbon liquids prior to the point of custody transfer.

(3) Facilities that process, upgrade, or store natural gas prior to the point at which natural gas enters the natural gas

transmission and storage source category or is delivered to a final end user. For the purposes of this subpart, natural gas enters the natural gas transmission and storage source category after the natural gas processing plant, when present. If no natural gas processing plant is present, natural gas enters the natural gas transmission and storage source category after the point of custody transfer.

(b) The affected sources to which the provisions of this subpart apply shall comprise each emission point located at a facility that meets the criteria specified in paragraph (a) of this section and listed in paragraphs (b)(1) through (4) of this section.

(1) Each glycol dehydration unit;

(2) Each storage vessel with the potential for flash emissions;

(3) The group of all ancillary equipment, except compressors, intended to operate in volatile hazardous air pollutant service (as defined in § 63.761), which are located at natural gas processing plants; and

(4) Compressors intended to operate in volatile hazardous air pollutant service (as defined in § 63.761), which are located at natural gas processing plants.

(c) [Reserved]

(d) The owner and operator of a facility that does not contain an affected source as specified in paragraph (b) of this section are not subject to the requirements of this subpart.

(e) *Exemptions.* The facilities listed in paragraphs (e)(1) and (e)(2) of this section are exempt from the requirements of this subpart. Records shall be maintained as required in § 63.10(b)(3).

(1) A facility that exclusively processes, stores, or transfers black oil (as defined in § 63.761) is not subject to the requirements of this subpart. For the purposes of this subpart, a black oil facility that uses natural gas for fuel or generates gas from black oil shall qualify for this exemption.

(2) A facility, prior to the point of custody transfer, with a facilitywide actual annual average natural gas throughput less than 18.4 thousand standard cubic meters per day and a facilitywide actual annual average hydrocarbon liquid throughput less than 39,700 liters per day.

(f) The owner or operator of an affected source shall achieve compliance with the provisions of this subpart by the dates specified in paragraphs (f)(1) and (f)(2) of this section.

(1) The owner or operator of an affected source, the construction or reconstruction of which commenced before February 6, 1998, shall achieve compliance with provisions of this subpart no later than June 17, 2002 except as provided for in § 63.6(i). The owner or operator of an area source, the construction or reconstruction of which commenced before February 6, 1998, that increases its emissions of (or its potential to emit) HAP such that the source becomes a major source that is subject to this subpart shall comply with this subpart 3 years after becoming a major source.

(2) The owner or operator of an affected source, the construction or reconstruction of which commences on or after February 6, 1998, shall achieve compliance with the provisions of this subpart immediately upon initial startup or June 17, 1999, whichever date is later. Area sources, the construction or reconstruction of which commences on or after February 6, 1998, that become major sources shall comply with the provisions of this standard immediately upon becoming a major source.

(g) The following provides owners or operators of an affected source with information on overlap of this subpart with other regulations for equipment leaks. The owner or operator shall document that they are complying with other regulations by keeping the records specified in § 63.774(b)(9).

(1) After the compliance dates specified in paragraph (f) of this section, ancillary equipment and compressors that are subject to this subpart and that are also subject to and controlled under the provisions of 40 CFR part 60, subpart KKK, are only required to comply with the requirements of 40 CFR part 60, subpart KKK.

(2) After the compliance dates specified in paragraph (f) of this section, ancillary equipment and compressors that are subject to this subpart and are also subject to and controlled under the provisions of 40 CFR part 61, subpart V, are only required to comply with the requirements of 40 CFR part 61, subpart V.

(3) After the compliance dates specified in paragraph (f) of this section, ancillary equipment and compressors that are subject to this subpart and are also subject to and controlled under the provisions of 40 CFR part 63, subpart H, are only required to comply with the requirements of 40 CFR part 63, subpart H.

(h) An owner or operator of an affected source that is a major source or is located at a major source and is subject to the provisions of this subpart is also subject to 40 CFR part 70 or part 71 operating permit requirements.

§ 63.761 Definitions.

All terms used in this subpart shall have the meaning given them in the Clean Air Act (Act), subpart A of this part (General Provisions), and in this section. If the same term is defined in subpart A and in this section, it shall have the meaning given in this section for purposes of this subpart.

Alaskan North Slope means the approximately 180,000 square kilometer area (69,000 square mile area) extending from the Brooks Range to the Arctic Ocean.

Ancillary equipment means any of the following pieces of equipment: pumps, pressure relief devices, sampling connection systems, open-ended valves, or lines, valves, flanges, or other connectors.

API gravity means the weight per unit volume of hydrocarbon liquids as measured by a system recommended by the American Petroleum Institute (API) and is expressed in degrees.

Associated equipment, as used in this subpart and as referred to in section 112(n)(4) of the Act, means equipment associated with an oil or natural gas exploration or production well, and includes all equipment from the wellbore to the point of custody transfer, except glycol dehydration units and storage vessels with the potential for flash emissions.

Black oil means hydrocarbon (petroleum) liquid with an initial producing gas-to-oil ratio (GOR) less than 0.31 cubic meters per liter and an API gravity less than 40 degrees.

Boiler means an enclosed device using controlled flame combustion and having the primary purpose of recovering and exporting thermal energy in the form of steam or hot water. Boiler also means any industrial furnace as defined in 40 CFR 260.10.

Closed-vent system means a system that is not open to the atmosphere and is composed of piping, ductwork, connections, and if necessary, flow inducing devices that transport gas or vapor from an emission point to one or more control devices. If gas or vapor from regulated equipment is routed to a process (e.g., to a fuel gas system), the conveyance system shall not be considered a closed-vent system and is not subject to closed-vent system standards.

Combustion device means an individual unit of equipment, such as a flare, incinerator, process heater, or boiler, used for the combustion of organic HAP emissions.

Condensate means hydrocarbon liquid separated from natural gas that condenses due to changes in the temperature, pressure, or both, and

remains liquid at standard conditions, as specified in § 63.2.

Continuous recorder means a data recording device that either records an instantaneous data value at least once every hour or records hourly or more frequent block average values.

Control device means any equipment used for recovering or oxidizing HAP or volatile organic compound (VOC) vapors. Such equipment includes, but is not limited to, absorbers, carbon adsorbers, condensers, incinerators, flares, boilers, and process heaters. For the purposes of this subpart, if gas or vapor from regulated equipment is used, reused (i.e., injected into the flame zone of a combustion device), returned back to the process, or sold, then the recovery system used, including piping, connections, and flow inducing devices, is not considered to be control devices or closed-vent systems.

Cover means a device which is placed on top of or over a material such that the entire surface area of the material is enclosed and sealed. A cover may have openings (such as access hatches, sampling ports, and gauge wells) if those openings are necessary for operation, inspection, maintenance, or repair of the unit on which the cover is installed, provided that each opening is closed and sealed when the opening is not in use. In addition, a cover may have one or more safety devices. Examples of a cover include, but are not limited to, a fixed-roof installed on a tank, an external floating roof installed on a tank, and a lid installed on a drum or other container.

Custody transfer means the transfer of hydrocarbon liquids or natural gas: after processing and/or treatment in the producing operations, or from storage vessels or automatic transfer facilities or other such equipment, including product loading racks, to pipelines or any other forms of transportation. For the purposes of this subpart, the point at which such liquids or natural gas enters a natural gas processing plant is a point of custody transfer.

Equipment leaks means emissions of HAP from ancillary equipment (as defined in this section) and compressors.

Facility means any grouping of equipment where hydrocarbon liquids are processed, upgraded (i.e., remove impurities or other constituents to meet contract specifications), or stored prior to the point of custody transfer; or where natural gas is processed, upgraded, or stored prior to entering the natural gas transmission and storage source category. For the purpose of a major source determination, facility (including a building, structure, or installation) means oil and natural gas production and processing equipment that is located within the boundaries of an individual surface site as defined in this section. Equipment that is part of a facility will typically be located within close proximity to other equipment located at the same facility. Pieces of production equipment or groupings of equipment located on different oil and gas leases, mineral fee tracts, lease tracts, subsurface or surface unit areas, surface fee tracts, surface lease tracts, or separate surface sites, whether or not connected by a road, waterway, power line or pipeline, shall not be considered part of the same facility. Examples of facilities in the oil and natural gas production source category include, but are not limited to, well sites, satellite tank batteries, central tank batteries, a compressor station that transports natural gas to a natural gas processing plant, and natural gas processing plants.

Field natural gas means natural gas extracted from a production well prior to entering the first stage of processing, such as dehydration.

Fixed-roof means a cover that is mounted on a storage vessel in a stationary manner and that does not move with fluctuations in liquid level.

Flame zone means the portion of the combustion chamber in a combustion device occupied by the flame envelope.

Flash tank. See the definition for gas-condensate-glycol (GCG) separator.

Flow indicator means a device which indicates whether gas flow is present in a line or whether the valve position would allow gas flow to be present in a line.

Gas-condensate-glycol (GCG) separator means a two- or three-phase separator through which the "rich" glycol stream of a glycol dehydration unit is passed to remove entrained gas and hydrocarbon liquid. The GCG separator is commonly referred to as a flash separator or flash tank.

Gas-to-oil ratio (GOR) means the number of standard cubic meters of gas produced per liter of crude oil or other hydrocarbon liquid.

Glycol dehydration unit means a device in which a liquid glycol (including, but not limited to, ethylene glycol, diethylene glycol, or triethylene glycol) absorbent directly contacts a natural gas stream and absorbs water in a contact tower or absorption column (absorber). The glycol contacts and absorbs water vapor and other gas stream constituents from the natural gas and becomes "rich" glycol. This glycol is then regenerated in the glycol dehydration unit reboiler. The "lean" glycol is then recycled.

Glycol dehydration unit baseline operations means operations representative of the glycol dehydration unit operations as of June 17, 1999. For the purposes of this subpart, for determining the percentage of overall HAP emission reduction attributable to process modifications, baseline operations shall be parameter values (including, but not limited to, glycol circulation rate or glycol-HAP absorbency) that represent actual long-term conditions (i.e., at least 1 year). Glycol dehydration units in operation for less than 1 year shall document that the parameter values represent expected long-term operating conditions had process modifications not been made.

Glycol dehydration unit process vent means either the glycol dehydration unit reboiler vent and the vent from the GCG separator (flash tank), if present.

Glycol dehydration unit reboiler vent means the vent through which exhaust from the reboiler of a glycol dehydration unit passes from the reboiler to the atmosphere or to a control device.

Hazardous air pollutants or *HAP* means the chemical compounds listed in section 112(b) of the Clean Air Act. All chemical compounds listed in section 112(b) of the Act need to be considered when making a major source determination. Only the HAP compounds listed in Table 1 of this subpart need to be considered when determining compliance.

Hydrocarbon liquid means any naturally occurring, unrefined petroleum liquid.

In VHAP service means that a piece of ancillary equipment or compressor either contains or contacts a fluid (liquid or gas) which has a total volatile HAP (VHAP) concentration equal to or greater than 10 percent by weight as determined according to the provisions of § 63.772(a).

In wet gas service means that a piece of equipment contains or contacts the field gas before the extraction of natural gas liquids.

Incinerator means an enclosed combustion device that is used for destroying organic compounds. Auxiliary fuel may be used to heat waste gas to combustion temperatures. Any energy recovery section is not physically formed into one manufactured or assembled unit with the combustion section; rather, the energy recovery section is a separate section following the combustion section and the two are joined by ducts or connections carrying flue gas. The above energy recovery section limitation does not apply to an energy recovery section used solely to preheat the incoming vent stream or combustion air.

Initial producing GOR means the producing standard cubic meters of gas per liter at the time that the reservoir pressure is above the bubble point pressure (or dewpoint pressure for a gas).

Initial startup means the first time a new or reconstructed source begins production. For the purposes of this subpart, initial startup does not include subsequent startups (as defined in this section) of equipment, for example, following malfunctions or shutdowns.

Major source, as used in this subpart, shall have the same meaning as in § 63.2, except that: (1) Emissions from any oil or gas exploration or production well (with its associated equipment (as defined in this section)) and emissions from any pipeline compressor station or pump station shall not be aggregated with emissions from other similar units, to determine whether such emission points or stations are major sources, even when emission points are in a contiguous area or under common control; (2) Emissions from processes, operations, or equipment that are not part of the same facility, as defined in this section, shall not be aggregated; and (3) For facilities that are production field facilities, only HAP emissions from glycol dehydration units and storage tanks with flash emission potential shall be aggregated for a major source determination.

Natural gas means a naturally occurring mixture of hydrocarbon and nonhydrocarbon gases found in geologic formations beneath the earth's surface. The principal hydrocarbon constituent is methane.

Natural gas liquids (NGL) means the liquid hydrocarbons, such as ethane, propane, butane, pentane, natural gasoline, and condensate that are extracted from field natural gas.

Natural gas processing plant (gas plant) means any processing site engaged in the extraction of natural gas liquids from field gas, or the fractionation of mixed NGL to natural gas products, or a combination of both.

No detectable emissions means no escape of HAP from a device or system to the atmosphere as determined by:

(1) Instrument monitoring results in accordance with the requirements of § 63.772(c); and

(2) The absence of visible openings or defects in the device or system, such as rips, tears, or gaps.

Operating parameter value means a minimum or maximum value established for a control device or process parameter which, if achieved by itself or in combination with one or more other operating parameter values, indicates that an owner or operator has complied with an applicable operating parameter limitation, over the appropriate averaging period as specified in § 63.772(f) or (g).

Operating permit means a permit required by 40 CFR part 70 or part 71.

Organic monitoring device means an instrument used to indicate the concentration level of organic compounds exiting a control device based on a detection principle such as infra-red, photoionization, or thermal conductivity.

Primary fuel means the fuel that provides the principal heat input (i.e., more than 50 percent) to the device. To be considered primary, the fuel must be able to sustain operation without the addition of other fuels.

Process heater means an enclosed device using a controlled flame, the primary purpose of which is to transfer heat to a process fluid or process material that is not a fluid, or to a heat transfer material for use in a process (rather than for steam generation).

Produced water means water that is extracted from the earth from an oil or natural gas production well, or that is separated from crude oil, condensate, or natural gas after extraction.

Production field facilities means those facilities located prior to the point of custody transfer.

Production well means any hole drilled in the earth from which crude oil, condensate, or field natural gas is extracted.

Reciprocating compressor means a piece of equipment that increases the pressure of a process gas by positive displacement, employing linear movement of the drive shaft.

Relief device means a device used only to release an unplanned, non-routine discharge in order to avoid safety hazards or equipment damage. A relief device discharge can result from an operator error, a malfunction such as a power failure or equipment failure, or other unexpected cause that requires immediate venting of gas from process equipment in order to avoid safety hazards or equipment damage.

Safety device means a device that meets both of the following conditions: it is not used for planned or routine venting of liquids, gases, or fumes from the unit or equipment on which the device is installed; and it remains in a closed, sealed position at all times except when an unplanned event requires that the device open for the purpose of preventing physical damage or permanent deformation of the unit or equipment on which the device is installed in accordance with good engineering and safety practices for handling flammable, combustible, explosive, or other hazardous materials. Examples of unplanned events which may require a safety device to open include failure of an essential equipment component or a sudden power outage.

Shutdown means for purposes including, but not limited to, periodic maintenance, replacement of equipment, or repair, the cessation of operation of a glycol dehydration unit, or other affected source under this subpart, or equipment required or used solely to comply with this subpart.

Startup means the setting into operation of a glycol dehydration unit, or other affected equipment under this subpart, or equipment required or used to comply with this subpart. Startup includes initial startup and operation solely for the purpose of testing equipment.

Storage vessel means a tank or other vessel that is designed to contain an accumulation of crude oil, condensate, intermediate hydrocarbon liquids, or produced water and that is constructed primarily of non-earthen materials (e.g., wood, concrete, steel, plastic) that provide structural support.

Storage vessel with the potential for flash emissions means any storage vessel that contains a hydrocarbon liquid with a stock tank GOR equal to or greater than 0.31 cubic meters per liter and an API gravity equal to or greater than 40 degrees and an actual annual average hydrocarbon liquid throughput equal to or greater than 79,500 liters per day. Flash emissions occur when dissolved hydrocarbons in the fluid evolve from solution when the fluid pressure is reduced.

Surface site means any combination of one or more graded pad sites, gravel pad sites, foundations, platforms, or the immediate physical location upon which equipment is physically affixed.

Tank battery means a collection of equipment used to separate, treat, store, and transfer crude oil, condensate, natural gas, and produced water. A tank battery typically receives crude oil, condensate, natural gas, or some combination of these extracted products from several production wells for accumulation and separation prior to transmission to a natural gas plant or petroleum refinery. A tank battery may or may not include a glycol dehydration unit.

Temperature monitoring device means an instrument used to monitor temperature and having a minimum accuracy of ±2 percent of the temperature being monitored expressed in °C, or ±2.5 °C, whichever is greater. The temperature monitoring device may

measure temperature in degrees Fahrenheit or degrees Celsius, or both.

Total organic compounds or *TOC*, as used in this subpart, means those compounds which can be measured according to the procedures of Method 18, 40 CFR part 60, appendix A.

Volatile hazardous air pollutant concentration or *VHAP concentration* means the fraction by weight of all HAP contained in a material as determined in accordance with procedures specified in § 63.772(a).

§ 63.762 Startups, shutdowns, and malfunctions.

(a) The provisions set forth in this subpart shall apply at all times except during startups or shutdowns, during malfunctions, and during periods of non-operation of the affected sources (or specific portion thereof) resulting in cessation of the emissions to which this subpart applies. However, during the startup, shutdown, malfunction, or period of non-operation of one portion of an affected source, all emission points which can comply with the specific provisions to which they are subject must do so during the startup, shutdown, malfunction, or period of non-operation.

(b) The owner or operator shall not shut down items of equipment that are required or utilized for compliance with the provisions of this subpart during times when emissions are being routed to such items of equipment, if the shutdown would contravene requirements of this subpart applicable to such items of equipment. This paragraph does not apply if the item of equipment is malfunctioning, or if the owner or operator must shut down the equipment to avoid damage due to a contemporaneous startup, shutdown, or malfunction of the affected source or a portion thereof.

(c) During startups, shutdowns, and malfunctions when the requirements of this subpart do not apply pursuant to paragraphs (a) and (b) of this section, the owner or operator shall implement, to the extent reasonably available, measures to prevent or minimize excess emissions to the maximum extent practical. For purposes of this paragraph, the term "excess emissions" means emissions in excess of those that would have occurred if there were no startup, shutdown, or malfunction, and the owner or operator complied with the relevant provisions of this subpart. The measures to be taken shall be identified in the applicable startup, shutdown, and malfunction plan, and may include, but are not limited to, air pollution control technologies, recovery technologies, work practices, pollution prevention, monitoring, and/or changes in the manner of operation of the source. Back-up control devices are not required, but may be used if available.

(d) The owner or operator shall prepare a startup, shutdown, or malfunction plan as required in § 63.6(e)(3) except that the plan is not required to be incorporated by reference into the source's title V permit as specified in § 63.6(e)(3)(i). Instead, the owner or operator shall keep the plan on record as required by § 63.6(e)(3)(v). The failure of the plan to adequately minimize emissions during startup, shutdown, or malfunctions does not shield an owner or operator from enforcement actions.

§ 63.763 [Reserved].

§ 63.764 General standards.

(a) Table 1 of this subpart specifies the provisions of subpart A (General Provisions) that apply and those that do not apply to owners and operators of affected sources subject to this subpart.

(b) All reports required under this subpart shall be sent to the Administrator at the appropriate address listed in § 63.13. Reports may be submitted on electronic media.

(c) Except as specified in paragraph (e) of this section, the owner or operator of an affected source located at an existing or new major source of HAP emissions shall comply with the standards in this subpart as specified in paragraphs (c)(1) through (3) of this section.

(1) For each glycol dehydration unit process vent subject to this subpart, the owner or operator shall comply with the requirements specified in paragraphs (c)(1)(i) through (iii) of this section.

(i) The owner or operator shall comply with the control requirements for glycol dehydration unit process vents specified in § 63.765;

(ii) The owner or operator shall comply with the monitoring requirements specified in § 63.773; and

(iii) The owner or operator shall comply with the recordkeeping and reporting requirements specified in §§ 63.774 and 63.775.

(2) For each storage vessel with the potential for flash emissions subject to this subpart, the owner or operator shall comply with the requirements specified in paragraphs (c)(2)(i) through (iii) of this section.

(i) The control requirements for storage vessels specified in § 63.766;

(ii) The monitoring requirements specified in § 63.773; and

(iii) The recordkeeping and reporting requirements specified in §§ 63.774 and 63.775.

(3) For ancillary equipment (as defined in § 63.761) and compressors at a natural gas processing plant subject to this subpart, the owner or operator shall comply with the requirements for equipment leaks specified in § 63.769.

(d) [Reserved]

(e) *Exemptions.* (1) The owner or operator is exempt from the requirements of paragraph (c)(1) of this section if the criteria listed in paragraph (e)(1)(i) or (e)(1)(ii) are met. Records of the determination of these criteria must be maintained as required in § 63.774(d)(1) of this subpart.

(i) The actual annual average flowrate of natural gas to the glycol dehydration unit is less than 85 thousand standard cubic meters per day, as determined by the procedures specified in § 63.772(b)(1) of this subpart; or

(ii) The actual average emissions of benzene from the glycol dehydration unit process vent to the atmosphere are less than 0.90 megagram per year, as determined by the procedures specified in § 63.772(b)(2) of this subpart.

(2) The owner or operator is exempt from the requirements of paragraph (c)(3) of this section for ancillary equipment (as defined in § 63.761) and compressors at a natural gas processing plant subject to this subpart, if the criteria listed in paragraphs (e)(2)(i) and (e)(2)(ii) are met. Records of the determination of these criteria must be maintained as required in § 63.774(d)(2) of this subpart.

(i) Any ancillary equipment and compressors that contain or contact a fluid (liquid or gas) must have a total VHAP concentration less than 10 percent by weight, as determined by the procedures specified in § 63.772(a) of this subpart; and

(ii) That ancillary equipment and compressors must operate in VHAP service less than 300 hours per calendar year.

(f) Each owner or operator of a major HAP source subject to this subpart is required to apply for a 40 CFR part 70 or part 71 operating permit from the appropriate permitting authority. If the Administrator has approved a State operating permit program under 40 CFR part 70, the permit shall be obtained from the State authority. If a State operating permit program has not been approved, the owner or operator of a source shall apply to the EPA Regional Office pursuant to 40 CFR part 71.

(g) [Reserved]

(h) [Reserved]

(i) In all cases where the provisions of this subpart require an owner or operator to repair leaks by a specified time after the leak is detected, it is a violation of this standard to fail to take

action to repair the leak(s) within the specified time. If action is taken to repair the leak(s) within the specified time, failure of that action to successfully repair the leak(s) is not a violation of this standard. However, if the repairs are unsuccessful, a leak is detected and the owner or operator shall take further action as required by the applicable provisions of this subpart.

§ 63.765 Glycol dehydration unit process vent standards.

(a) This section applies to each glycol dehydration unit subject to this subpart with an actual annual average natural gas flowrate equal to or greater than 85 thousand standard cubic meters per day and with actual average benzene glycol dehydration unit process vent emissions equal to or greater than 0.90 megagrams per year, that must be controlled for HAP emissions as specified in § 63.764(c)(1)(i).

(b) Except as provided in paragraph (c) of this section, an owner or operator of a glycol dehydration unit process vent shall comply with the requirements specified in paragraphs (b)(1) and (b)(2) of this section.

(1) For each glycol dehydration unit process vent, the owner or operator shall control air emissions by either paragraph (b)(1)(i) or (b)(1)(ii) of this section.

(i) The owner or operator shall connect the process vent to a control device or a combination of control devices through a closed-vent system. The closed-vent system shall be designed and operated in accordance with the requirements of § 63.771(c). The control device(s) shall be designed and operated in accordance with the requirements of § 63.771(d).

(ii) The owner or operator shall connect the process vent to a control device or combination of control devices through a closed-vent system and the outlet benzene emissions from the control device(s) shall be reduced to a level less than 0.90 megagrams per year. The closed-vent system shall be designed and operated in accordance with the requirements of § 63.771(c). The control device(s) shall be designed and operated in accordance with the requirements of § 63.771(d), except that the performance levels specified in § 63.771(d)(1)(i) and (ii) do not apply.

(2) One or more safety devices that vent directly to the atmosphere may be used on the air emission control equipment installed to comply with paragraph (b)(1) of this section.

(c) As an alternative to the requirements of paragraph (b) of this section, the owner or operator may comply with one of the requirements specified in paragraphs (c)(1) through (3) of this section.

(1) The owner or operator shall control air emissions by connecting the process vent to a process natural gas line.

(2) The owner or operator shall demonstrate, to the Administrator's satisfaction, that the total HAP emissions to the atmosphere from the glycol dehydration unit process vent are reduced by 95.0 percent through process modifications, or a combination of process modifications and one or more control devices, in accordance with the requirements specified in § 63.771(e).

(3) Control of HAP emissions from a GCG separator (flash tank) vent is not required if the owner or operator demonstrates, to the Administrator's satisfaction, that total emissions to the atmosphere from the glycol dehydration unit process vent are reduced by one of the levels specified in paragraphs (c)(3)(i) through (c)(3)(ii) of this section, through the installation and operation of controls as specified in paragraph (b)(1) of this section.

(i) HAP emissions are reduced by 95.0 percent or more.

(ii) Benzene emissions are reduced to a level less than 0.90 megagrams per year.

§ 63.766 Storage vessel standards.

(a) This section applies to each storage vessel with the potential for flash emissions (as defined in § 63.761) subject to this subpart.

(b) The owner or operator of a storage vessel with the potential for flash emissions (as defined in § 63.761) shall comply with one of the control requirements specified in paragraphs (b)(1) and (2) of this section.

(1) The owner or operator shall equip the affected storage vessel with the potential for flash emissions with a cover that is connected, through a closed-vent system that meets the conditions specified in § 63.771(c), to a control device or a combination of control devices that meets any of the conditions specified in § 63.771(d). The cover shall be designed and operated in accordance with the requirements of § 63.771(b).

(2) The owner or operator of a pressure storage vessel that is designed to operate as a closed system shall operate the storage vessel with no detectable emissions at all times that material is in the storage vessel, except as provided for in paragraph (c) of this section.

(c) One or more safety devices that vent directly to the atmosphere may be used on the storage vessel and air emission control equipment complying with paragraphs (b)(1) and (2) of this section.

(d) This section does not apply to storage vessels for which the owner or operator is meeting the requirements specified in 40 CFR part 60, subpart Kb; or is meeting the requirements specified in 40 CFR part 63, subparts G or CC.

§ 63.767 [Reserved].

§ 63.768 [Reserved].

§ 63.769 Equipment leak standards.

(a) This section applies to equipment subject to this subpart, located at natural gas processing plants and specified in paragraphs (a)(1) and (a)(2) of this section, that contains or contacts a fluid (liquid or gas) that has a total VHAP concentration equal to or greater than 10 percent by weight (determined according to the procedures specified in § 63.772(a)) and that operates in VHAP service equal to or greater than 300 hours per calendar year.

(1) Ancillary equipment, as defined in § 63.761; and

(2) Compressors.

(b) This section does not apply to ancillary equipment and compressors for which the owner or operator is meeting the requirements specified in subpart H of this part; or is meeting the requirements specified in 40 CFR part 60, subpart KKK.

(c) For each piece of ancillary equipment and each compressor subject to this section located at an existing or new source, the owner or operator shall meet the requirements specified in 40 CFR part 61, subpart V, §§ 61.241 through 61.247, except as specified in paragraphs (c)(1) through (8) of this section.

(1) Each pressure relief device in gas/vapor service shall be monitored quarterly and within 5 days after each pressure release to detect leaks, except under the following conditions.

(i) The owner or operator has obtained permission from the Administrator to use an alternative means of emission limitation that achieves a reduction in emissions of VHAP at least equivalent to that achieved by the control required in this subpart.

(ii) The pressure relief device is located in a nonfractionating facility that is monitored only by non-facility personnel, it may be monitored after a pressure release the next time the monitoring personnel are on site, instead of within 5 days. Such a pressure relief device shall not be allowed to operate for more than 30 days after a pressure release without monitoring.

(2) For pressure relief devices, if an instrument reading of 10,000 parts per

million or greater is measured, a leak is detected.

(3) For pressure relief devices, when a leak is detected, it shall be repaired as soon as practicable, but no later than 15 calendar days after it is detected, unless a delay in repair of equipment is granted under 40 CFR 61.242–10.

(4) Sampling connection systems are exempt from the requirements of 40 CFR 61.242–5.

(5) Pumps in VHAP service, valves in gas/vapor and light liquid service, and pressure relief devices in gas/vapor service that are located at a nonfractionating plant that does not have the design capacity to process 283,000 standard cubic meters per day or more of field gas are exempt from the routine monitoring requirements of 40 CFR 61.242–2(a)(1) and 61.242–7(a), and paragraphs (c)(1) through (3) of this section.

(6) Pumps in VHAP service, valves in gas/vapor and light liquid service, and pressure relief devices in gas/vapor service located within a natural gas processing plant that is located on the Alaskan North Slope are exempt from the routine monitoring requirements of 40 CFR 61.242–2(a)(1) and 61.242–7(a), and (c)(1) through (3) of this section.

(7) Reciprocating compressors in wet gas service are exempt from the compressor control requirements of 40 CFR 61.242–3.

(8) Flares used to comply with this subpart shall comply with the requirements of § 63.11(b).

§ 63.770 [Reserved].

§ 63.771 Control equipment requirements.

(a) This section applies to each cover, closed-vent system, and control device installed and operated by the owner or operator to control air emissions as required by the provisions of this subpart. Compliance with paragraphs (b), (c), and (d) of this section will be determined by review of the records required by § 63.774 and the reports required by § 63.775, by review of performance test results, and by inspections.

(b) *Cover requirements.* (1) The cover and all openings on the cover (e.g., access hatches, sampling ports, and gauge wells) shall be designed to form a continuous barrier over the entire surface area of the liquid in the tank.

(2) Each cover opening shall be secured in a closed, sealed position (e.g., covered by a gasketed lid or cap) whenever material is in the unit on which the cover is installed except during those times when it is necessary to use an opening as follows:

(i) To add material to, or remove material from the unit (this includes openings necessary to equalize or balance the internal pressure of the unit following changes in the level of the material in the unit);

(ii) To inspect or sample the material in the unit;

(iii) To inspect, maintain, repair, or replace equipment located inside the unit; or

(iv) To vent liquids, gases, or fumes from the unit through a closed-vent system to a control device designed and operated in accordance with the requirements of paragraphs (c) and (d) of this section.

(c) *Closed-vent system requirements.* (1) The closed-vent system shall route all gases, vapors, and fumes emitted from the material in a HAP emissions unit to a control device that meets the requirements specified in paragraph (d) of this section.

(2) The closed-vent system shall be designed and operated with no detectable emissions.

(3) If the closed-vent system contains one or more bypass devices that could be used to divert all or a portion of the gases, vapors, or fumes from entering the control device, the owner or operator shall meet the requirements specified in paragraphs (c)(3)(i) and (c)(3)(ii) of this section.

(i) For each bypass device, except as provided for in paragraph (c)(3)(ii) of this section, the owner or operator shall either:

(A) Properly install, calibrate, maintain, and operate a flow indicator at the inlet to the bypass device that could divert the stream away from the control device to the atmosphere that takes a reading at least once every 15 minutes and sounds an alarm when the bypass device is open such that the stream is being, or could be, diverted away from the control device to the atmosphere; or

(B) Secure the bypass device valve installed at the inlet to the bypass device in the non-diverting position using a car-seal or a lock-and-key type configuration. The owner or operator shall visually inspect the seal or closure mechanism at least once every month to verify that the valve is maintained in the non-diverting position and the vent stream is not diverted through the bypass device.

(ii) Low leg drains, high point bleeds, analyzer vents, open-ended valves or lines, and safety devices are not subject to the requirements of paragraph (c)(3)(i) of this section.

(d) *Control device requirements.* (1) The control device used to reduce HAP emissions in accordance with the standards of this subpart shall be one of the control devices specified in paragraphs (d)(1)(i) through (iii) of this section.

(i) An enclosed combustion device (e.g., thermal vapor incinerator, catalytic vapor incinerator, boiler, or process heater) that is designed and operated in accordance with one of the following performance requirements:

(A) Reduces the mass content of either TOC or total HAP in the gases vented to the device by 95.0 percent by weight or greater as determined in accordance with the requirements of § 63.772(e); or

(B) Reduces the concentration of either TOC or total HAP in the exhaust gases at the outlet to the device to a level equal to or less than 20 parts per million by volume on a dry basis corrected to 3 percent oxygen as determined in accordance with the requirements of § 63.772(e); or

(C) Operates at a minimum residence time of 0.5 seconds at a minimum temperature of 760°C.

(D) If a boiler or process heater is used as the control device, then the vent stream shall be introduced into the flame zone of the boiler or process heater.

(ii) A vapor recovery device (e.g., carbon adsorption system or condenser) or other control device that is designed and operated to reduce the mass content of either TOC or total HAP in the gases vented to the device by 95.0 percent by weight or greater as determined in accordance with the requirements of § 63.772(e).

(iii) A flare that is designed and operated in accordance with the requirements of § 63.11(b).

(2) [Reserved]

(3) The owner or operator shall demonstrate that a control device achieves the performance requirements of paragraph (d)(1) of this section as specified in § 63.772(e).

(4) The owner or operator shall operate each control device in accordance with the requirements specified in paragraphs (d)(4)(i) and (ii) of this section.

(i) Each control device used to comply with this subpart shall be operating at all times when gases, vapors, and fumes are vented from the HAP emissions unit or units through the closed-vent system to the control device, as required under §§ 63.765, 63.766, and 63.769, except when maintenance or repair on a unit cannot be completed without a shutdown of the control device. An owner or operator may vent more than one unit to a control device used to comply with this subpart.

(ii) For each control device monitored in accordance with the requirements of § 63.773(d), the owner or operator shall demonstrate compliance according to

the requirements of § 63.772(f) or (g), as applicable.

(5) For each carbon adsorption system used as a control device to meet the requirements of paragraph (d)(1) of this section, the owner or operator shall manage the carbon as follows:

(i) Following the initial startup of the control device, all carbon in the control device shall be replaced with fresh carbon on a regular, predetermined time interval that is no longer than the carbon service life established for the carbon adsorption system.

(ii) The spent carbon removed from the carbon adsorption system shall be either regenerated, reactivated, or burned in one of the units specified in paragraphs (d)(5)(ii)(A) through (d)(5)(ii)(G) of this section.

(A) Regenerated or reactivated in a thermal treatment unit for which the owner or operator has been issued a final permit under 40 CFR part 270 that implements the requirements of 40 CFR part 264, subpart X.

(B) Regenerated or reactivated in a thermal treatment unit equipped with and operating air emission controls in accordance with this section.

(C) Regenerated or reactivated in a thermal treatment unit equipped with and operating organic air emission controls in accordance with a national emissions standard for HAP under another subpart in 40 CFR part 61 or this part.

(D) Burned in a hazardous waste incinerator for which the owner or operator has been issued a final permit under 40 CFR part 270 that implements the requirements of 40 CFR part 264, subpart O.

(E) Burned in a hazardous waste incinerator which the owner or operator has designed and operates in accordance with the requirements of 40 CFR part 265, subpart O.

(F) Burned in a boiler or industrial furnace for which the owner or operator has been issued a final permit under 40 CFR part 270 that implements the requirements of 40 CFR part 266, subpart H.

(G) Burned in a boiler or industrial furnace which the owner or operator has designed and operates in accordance with the interim status requirements of 40 CFR part 266, subpart H.

(e) *Process modification requirements.* Each owner or operator that chooses to comply with § 63.765(c)(2) shall meet the requirements specified in paragraphs (e)(1) through (e)(3) of this section.

(1) The owner or operator shall determine glycol dehydration unit baseline operations (as defined in § 63.761). Records of glycol dehydration unit baseline operations shall be retained as required under § 63.774(b)(10).

(2) The owner or operator shall document, to the Administrator's satisfaction, the conditions for which glycol dehydration unit baseline operations shall be modified to achieve the 95.0 percent overall HAP emission reduction, either through process modifications or through a combination of process modifications and one or more control devices. If a combination of process modifications and one or more control devices are used, the owner or operator shall also establish the percent HAP reduction to be achieved by the control device to achieve an overall HAP emission reduction of 95.0 percent for the glycol dehydration unit process vent. Only modifications in glycol dehydration unit operations directly related to process changes, including, but not limited to, changes in glycol circulation rate or glycol-HAP absorbency, shall be allowed. Changes in the inlet gas characteristics or natural gas throughput rate shall not be considered in determining the overall HAP emission reduction.

(3) The owner or operator that achieves a 95.0 percent HAP emission reduction using process modifications alone shall comply with paragraph (e)(3)(i) of this section. The owner or operator that achieves a 95.0 percent HAP emission reduction using a combination of process modifications and one or more control devices shall comply with paragraphs (e)(3)(i) and (e)(3)(ii) of this section.

(i) The owner or operator shall maintain records, as required in § 63.774(b)(11), that the facility continues to operate in accordance with the conditions specified under paragraph (e)(2) of this section.

(ii) The owner or operator shall comply with the control device requirements specified in paragraph (d) of this section, except that the emission reduction achieved shall be the emission reduction specified for the control device(s) in paragraph (e)(2) of this section.

§ 63.772 Test methods, compliance procedures, and compliance demonstrations.

(a) *Determination of material VHAP or HAP concentration to determine the applicability of the equipment leak standards under this subpart (§ 63.769).* Each piece of ancillary equipment and compressors are presumed to be in VHAP service or in wet gas service unless an owner or operator demonstrates that the piece of equipment is not in VHAP service or in wet gas service.

(1) For a piece of ancillary equipment and compressors to be considered not in VHAP service, it must be determined that the percent VHAP content can be reasonably expected never to exceed 10.0 percent by weight. For the purposes of determining the percent VHAP content of the process fluid that is contained in or contacts a piece of ancillary equipment or compressor, Method 18 of 40 CFR part 60, appendix A, shall be used.

(2) For a piece of ancillary equipment and compressors to be considered in wet gas service, it must be determined that it contains or contacts the field gas before the extraction of natural gas liquids.

(b) *Determination of glycol dehydration unit flowrate or benzene emissions.* The procedures of this paragraph shall be used by an owner or operator to determine glycol dehydration unit natural gas flowrate or benzene emissions to meet the criteria for an exemption from control requirements under § 63.764(e)(1).

(1) The determination of actual flowrate of natural gas to a glycol dehydration unit shall be made using the procedures of either paragraph (b)(1)(i) or (b)(1)(ii) of this section.

(i) The owner or operator shall install and operate a monitoring instrument that directly measures natural gas flowrate to the glycol dehydration unit with an accuracy of plus or minus 2 percent or better. The owner or operator shall convert annual natural gas flowrate to a daily average by dividing the annual flowrate by the number of days per year the glycol dehydration unit processed natural gas.

(ii) The owner or operator shall document, to the Administrator's satisfaction, that the actual annual average natural gas flowrate to the glycol dehydration unit is less than 85 thousand standard cubic meters per day.

(2) The determination of actual average benzene emissions from a glycol dehydration unit shall be made using the procedures of either paragraph (b)(2)(i) or (b)(2)(ii) of this section. Emissions shall be determined either uncontrolled, or with federally enforceable controls in place.

(i) The owner or operator shall determine actual average benzene emissions using the model GRI-GLYCalc™, Version 3.0 or higher, and the procedures presented in the associated GRI-GLYCalc™ Technical Reference Manual. Inputs to the model shall be representative of actual operating conditions of the glycol dehydration unit and may be

determined using the procedures documented in the Gas Research Institute (GRI) report entitled "Atmospheric Rich/Lean Method for Determining Glycol Dehydrator Emissions" (GRI-95/0368.1); or

(ii) The owner or operator shall determine an average mass rate of benzene emissions in kilograms per hour through direct measurement by performing three runs of Method 18. 40 CFR Part 60. appendix A (or an equivalent method). and averaging the results of the three runs. Annual emissions in kilograms per year shall be determined by multiplying the mass rate by the number of hours the unit is operated per year. This result shall be converted to megagrams per year.

(c) *No detectable emissions test procedure.* (1) The no detectable emissions test procedure shall be conducted in accordance with Method 21. 40 CFR part 60. appendix A.

(2) The detection instrument shall meet the performance criteria of Method 21. 40 CFR part 60. appendix A. except that the instrument response factor criteria in section 3.1.2(a) of Method 21 shall be for the average composition of the fluid and not for each individual organic compound in the stream.

(3) The detection instrument shall be calibrated before use on each day of its use by the procedures specified in Method 21. 40 CFR part 60. appendix A.

(4) Calibration gases shall be as follows:

(i) Zero air (less than 10 parts per million by volume hydrocarbon in air); and

(ii) A mixture of methane in air at a concentration less than 10.000 parts per million by volume.

(5) An owner or operator may choose to adjust or not adjust the detection instrument readings to account for the background organic concentration level. If an owner or operator chooses to adjust the instrument readings for the background level. the background level value must be determined according to the procedures in Method 21 of 40 CFR part 60. appendix A.

(6)(i) Except as provided in paragraph (c)(6)(i) of this section. the detection instrument shall meet the performance criteria of Method 21 of 40 CFR part 60. appendix A. except the instrument response factor criteria in section 3.1.2(a) of Method 21 shall be for the average composition of the process fluid not each individual volatile organic compound in the stream. For process streams that contain nitrogen. air. or other inerts which are not organic hazardous air pollutants or volatile organic compounds. the average stream response factor shall be calculated on an inert-free basis.

(ii) If no instrument is available at the facility that will meet the performance criteria specified in paragraph (c)(6)(i) of this section. the instrument readings may be adjusted by multiplying by the average response factor of the process fluid. calculated on an inert-free basis as described in paragraph (c)(6)(i) of this section.

(7) An owner or operator must determine if a potential leak interface operates with no detectable emissions using the applicable procedure specified in paragraph (c)(7)(i) or (c)(7)(ii) of this section.

(i) If an owner or operator chooses not to adjust the detection instrument readings for the background organic concentration level. then the maximum organic concentration value measured by the detection instrument is compared directly to the applicable value for the potential leak interface as specified in paragraph (c)(8) of this section.

(ii) If an owner or operator chooses to adjust the detection instrument readings for the background organic concentration level. the value of the arithmetic difference between the maximum organic concentration value measured by the instrument and the background organic concentration value as determined in paragraph (c)(5) of this section is compared with the applicable value for the potential leak interface as specified in paragraph (c)(8) of this section.

(8) A potential leak interface is determined to operate with no detectable organic emissions if the organic concentration value determined in paragraph (c)(7) of this section. is less than 500 parts per million by volume.

(d) [Reserved]

(e) *Control device performance test procedures.* This paragraph applies to the performance testing of control devices. The owners or operators shall demonstrate that a control device achieves the performance requirements of § 63.771(d)(1) or (e)(3)(ii) using either a performance test as specified in paragraph (e)(3) of this section or a design analysis as specified in paragraph (e)(4) of this section. The owner or operator may elect to use the alternative procedures in paragraph (e)(5) of this section for performance testing of a condenser used to control emissions from a glycol dehydration unit process vent.

(1) The following control devices are exempt from the requirements to conduct performance tests and design analyses under this section:

(i) A flare that is designed and operated in accordance with § 63.11(b);

(ii) A boiler or process heater with a design heat input capacity of 44 megawatts or greater;

(iii) A boiler or process heater into which the vent stream is introduced with the primary fuel or is used as the primary fuel;

(iv) A boiler or process heater burning hazardous waste for which the owner or operator has either been issued a final permit under 40 CFR part 270 and complies with the requirements of 40 CFR part 266. subpart H; or has certified compliance with the interim status requirements of 40 CFR part 266. subpart H;

(v) A hazardous waste incinerator for which the owner or operator has been issued a final permit under 40 CFR part 270 and complies with the requirements of 40 CFR part 264. subpart O; or has certified compliance with the interim status requirements of 40 CFR part 265. subpart O.

(vi) A control device for which a performance test was conducted for determining compliance with a regulation promulgated by the EPA and the test was conducted using the same methods specified in this section and either no process changes have been made since the test. or the owner or operator can demonstrate that the results of the performance test. with or without adjustments. reliably demonstrate compliance despite process changes.

(2) An owner or operator shall design and operate each flare in accordance with the requirements specified in § 63.11(b) and in paragraphs (e)(2)(i) and (e)(2)(ii) of this section.

(i) The compliance determination shall be conducted using Method 22 of 40 CFR part 60. appendix A. to determine visible emissions.

(ii) An owner or operator is not required to conduct a performance test to determine percent emission reduction or outlet organic HAP or TOC concentration when a flare is used.

(3) For a performance test conducted to demonstrate that a control device meets the requirements of § 63.771(d)(1) or (e)(3)(ii). the owner or operator shall use the test methods and procedures specified in paragraphs (e)(3)(i) through (e)(3)(iv) of this section. The performance test shall be conducted according to the schedule specified in § 63.7(a)(2) and the results of the performance test shall be submitted in the Notification of Compliance Status Report as required in § 63.775(d)(1)(ii.

(i) Method 1 or 1A. 40 CFR part 60. appendix A. as appropriate. shall be used for selection of the sampling sites in paragraphs (e)(3)(i)(A) and (B) of this section. Any references to particulate

mentioned in Methods 1 and 1A do not apply to this section.

(A) To determine compliance with the control device percent reduction requirement specified in § 63.771(d)(1)(i)(A), (d)(1)(ii) or (e)(3)(ii), sampling sites shall be located at the inlet of the first control device, and at the outlet of the final control device.

(B) To determine compliance with the enclosed combustion device total HAP concentration limit specified in § 63.771(d)(1)(i)(B), the sampling site shall be located at the outlet of the combustion device.

(ii) The gas volumetric flowrate shall be determined using Method 2, 2A, 2C, or 2D, 40 CFR part 60, appendix A, as appropriate.

(iii) To determine compliance with the control device percent reduction performance requirement in § 63.771(d)(1)(i)(A),(d)(1)(ii), and (e)(3)(ii), the owner or operator shall use either Method 18, 40 CFR part 60, appendix A or Method 25A, 40 CFR part 60, appendix A; alternatively, any other method or data that have been validated according to the applicable procedures in Method 301, 40 CFR part 63, appendix A, may be used. The following procedures shall be used to calculate percent reduction efficiency:

(A) The minimum sampling time for each run shall be 1 hour in which either an integrated sample or a minimum of four grab samples shall be taken. If grab sampling is used, then the samples shall be taken at approximately equal intervals in time, such as 15-minute intervals during the run.

(B) The mass rate of either TOC (minus methane and ethane) or total HAP (E_i, E_o) shall be computed.

(*1*) The following equations shall be used:

$$E_i = K_2\left(\sum_{j=1}^{n} C_{ij}M_{ij}\right)Q_i$$

$$E_o = K_2\left(\sum_{j=1}^{n} C_{oj}M_{oj}\right)Q_o$$

Where:

C_{ij}, C_{oj} = Concentration of sample component j of the gas stream at the inlet and outlet of the control device, respectively, dry basis, parts per million by volume.

E_i, E_o = Mass rate of TOC (minus methane and ethane) or total HAP at the inlet and outlet of the control device, respectively, dry basis, kilogram per hour.

M_{ij}, M_{oj} = Molecular weight of sample component j of the gas stream at the inlet and outlet of the control device, respectively, gram/gram-mole.

Q_i, Q_o = Flowrate of gas stream at the inlet and outlet of the control device, respectively, dry standard cubic meter per minute.

K_2 = Constant, 2.494×10^{-6} (parts per million) (gram-mole per standard cubic meter) (kilogram/gram) (minute/hour), where standard temperature (gram-mole per standard cubic meter) is 20°C.

(*2*) When the TOC mass rate is calculated, all organic compounds (minus methane and ethane) measured by Method 18, 40 CFR part 60, appendix A, or Method 25A, 40 CFR part 60, appendix A, shall be summed using the equations in paragraph (e)(3)(iii)(B)(*1*) of this section.

(*3*) When the total HAP mass rate is calculated, only HAP chemicals listed in Table 1 of this subpart shall be summed using the equations in paragraph (e)(3)(iii)(B)(*1*) of this section.

(C) The percent reduction in TOC (minus methane and ethane) or total HAP shall be calculated as follows:

$$R_{cd} = \frac{E_i - E_o}{E_i} \times 100\%$$

Where:

R_{cd} = Control efficiency of control device, percent.

E_i = Mass rate of TOC (minus methane and ethane) or total HAP at the inlet to the control device as calculated under paragraph (e)(3)(iii)(B) of this section, kilograms TOC per hour or kilograms HAP per hour.

E_o = Mass rate of TOC (minus methane and ethane) or total HAP at the outlet of the control device, as calculated under paragraph (e)(3)(iii)(B) of this section, kilograms TOC per hour or kilograms HAP per hour.

(D) If the vent stream entering a boiler or process heater with a design capacity less than 44 megawatts is introduced with the combustion air or as a secondary fuel, the weight-percent reduction of total HAP or TOC (minus methane and ethane) across the device shall be determined by comparing the TOC (minus methane and ethane) or total HAP in all combusted vent streams and primary and secondary fuels with the TOC (minus methane and ethane) or total HAP exiting the device, respectively.

(iv) To determine compliance with the enclosed combustion device total HAP concentration limit specified in § 63.771(d)(1)(i)(B), the owner or operator shall use either Method 18, 40 CFR part 60, appendix A, or Method 25A, 40 CFR part 60, appendix A, to measure either TOC (minus methane and ethane) or total HAP. Alternatively, any other method or data that have been validated according to Method 301 of appendix A of this part, may be used. The following procedures shall be used to calculate parts per million by volume concentration, corrected to 3 percent oxygen:

(A) The minimum sampling time for each run shall be 1 hour, in which either an integrated sample or a minimum of four grab samples shall be taken. If grab sampling is used, then the samples shall be taken at approximately equal intervals in time, such as 15-minute intervals during the run.

(B) The TOC concentration or total HAP concentration shall be calculated according to paragraph (e)(3)(iv)(B)(*1*) or (e)(3)(iv)(B)(*2*) of this section.

(*1*) The TOC concentration is the sum of the concentrations of the individual components and shall be computed for each run using the following equation:

$$C_{TOC} = \sum_{i=1}^{x} \frac{\left(\sum_{j=1}^{n} C_{ji}\right)}{x}$$

Where:

C_{TOC} = Concentration of total organic compounds minus methane and ethane, dry basis, parts per million by volume.

C_{ji} = Concentration of sample component j of sample i, dry basis, parts per million by volume.

n = Number of components in the sample.

x = Number of samples in the sample run.

(*2*) The total HAP concentration shall be computed according to the equation in paragraph (e)(3)(iv)(B)(*1*) of this section, except that only HAP chemicals listed in Table 1 of this subpart shall be summed.

(C) The TOC concentration or total HAP concentration shall be corrected to 3 percent oxygen as follows:

(*1*) The emission rate correction factor for excess air, integrated sampling and analysis procedures of Method 3B, 40 CFR part 60, appendix A, shall be used to determine the oxygen concentration. The samples shall be taken during the same time that the samples are taken for determining TOC concentration or total HAP concentration.

(*2*) The TOC or HAP concentration shall be corrected for percent oxygen by using the following equation:

$$C_c = C_m\left(\frac{17.9}{20.9 - \%O_{2d}}\right)$$

Where:

C_c = TOC concentration or total HAP concentration corrected to 3 percent oxygen, dry basis, parts per million by volume.

C_m = TOC concentration or total HAP concentration, dry basis, parts per million by volume.

$\%O_{2d}$ = Concentration of oxygen, dry basis, percent by volume.

(4) For a design analysis conducted to meet the requirements of § 63.771(d)(1) or (e)(3)(ii), the owner or operator shall meet the requirements specified in paragraphs (e)(4)(i) and (e)(4)(ii) of this section. Documentation of the design analysis shall be submitted as a part of the Notification of Compliance Status Report as required in § 63.775(d)(1)(i).

(i) The design analysis shall include analysis of the vent stream characteristics and control device operating parameters for the applicable control device as specified in paragraphs (e)(4)(i)(A) through (F) of this section.

(A) For a thermal vapor incinerator, the design analysis shall include the vent stream composition, constituent concentrations, and flowrate and shall establish the design minimum and average temperatures in the combustion zone and the combustion zone residence time.

(B) For a catalytic vapor incinerator, the design analysis shall include the vent stream composition, constituent concentrations, and flowrate and shall establish the design minimum and average temperatures across the catalyst bed inlet and outlet, and the design service life of the catalyst.

(C) For a boiler or process heater, the design analysis shall include the vent stream composition, constituent concentrations, and flowrate; shall establish the design minimum and average flame zone temperatures and combustion zone residence time; and shall describe the method and location where the vent stream is introduced into the flame zone.

(D) For a condenser, the design analysis shall include the vent stream composition, constituent concentrations, flowrate, relative humidity, and temperature, and shall establish the design outlet organic compound concentration level, design average temperature of the condenser exhaust vent stream, and the design average temperatures of the coolant fluid at the condenser inlet and outlet. As an alternative to the design analysis, an owner or operator may elect to use the procedures specified in paragraph (e)(5) of this section.

(E) For a regenerable carbon adsorption system, the design analysis shall include the vent stream composition, constituent concentrations, flowrate, relative humidity, and temperature, and shall establish the design exhaust vent stream organic compound concentration level, adsorption cycle time, number and capacity of carbon beds, type and working capacity of activated carbon used for the carbon beds, design total regeneration stream flow over the period of each complete carbon bed regeneration cycle, design carbon bed temperature after regeneration, design carbon bed regeneration time, and design service life of the carbon.

(F) For a nonregenerable carbon adsorption system, such as a carbon canister, the design analysis shall include the vent stream composition, constituent concentrations, flowrate, relative humidity, and temperature, and shall establish the design exhaust vent stream organic compound concentration level, capacity of the carbon bed, type and working capacity of activated carbon used for the carbon bed, and design carbon replacement interval based on the total carbon working capacity of the control device and source operating schedule. In addition, these systems will incorporate dual carbon canisters in case of emission breakthrough occurring in one canister.

(ii) If the owner or operator and the Administrator do not agree on a demonstration of control device performance using a design analysis then the disagreement shall be resolved using the results of a performance test performed by the owner or operator in accordance with the requirements of paragraph (e)(3) of this section. The Administrator may choose to have an authorized representative observe the performance test.

(5) As an alternative to the procedures in paragraphs (e)(3) and (e)(4)(i)(D) of this section, an owner or operator may elect to use the procedures documented in the GRI report entitled, "Atmospheric Rich/Lean Method for Determining Glycol Dehydrator Emissions" (GRI-95/0368.1) as inputs for the model GRI-GLYCalc™, Version 3.0 or higher, to determine condenser performance.

(f) *Compliance demonstration for control device performance requirements.* This paragraph applies to the demonstration of compliance with the control device performance requirements specified in §§ 63.771(d)(1)(ii) and 63.765(c)(2). Compliance shall be demonstrated using the requirements in paragraphs (f)(1) through (f)(3) of this section. As an alternative, an owner or operator that installs a condenser as the control device to achieve the requirements specified in § 63.771(d)(1)(ii) or § 63.765(c)(2), may demonstrate compliance according to paragraph (g) of this section. An owner or operator may switch between compliance with paragraph (f) of this section and compliance with paragraph (g) of this section only after at least 1 year of operation in compliance with the selected approach. Notification of such a change in the compliance method shall be reported in the next Periodic Report, as required in § 63.775(e), following the change.

(1) The owner or operator shall establish a site specific maximum or minimum monitoring parameter value (as appropriate) according to the requirements of § 63.773(d)(5)(i).

(2) The owner or operator shall calculate the daily average of the applicable monitored parameter in accordance with § 63.773(d)(4).

(3) Compliance with the operating parameter limit is achieved when the daily average of the monitoring parameter value calculated under paragraph (f)(2) of this section is either equal to or greater than the minimum or equal to or less than the maximum monitoring value established under paragraph (f)(1) of this section.

(g) *Compliance demonstration with percent reduction performance requirements—condensers.* This paragraph applies to the demonstration of compliance with the performance requirements specified in § 63.771(d)(1)(ii) or § 63.765(c)(2) for condensers. Compliance shall be demonstrated using the procedures in paragraphs (g)(1) through (g)(3) of this section.

(1) The owner or operator shall establish a site-specific condenser performance curve according to § 63.773(d)(5)(ii).

(2) Compliance with the percent reduction requirement in § 63.771(d)(1)(ii) or § 63.765(c)(2) shall be demonstrated by the procedures in paragraphs (g)(2)(i) through (g)(2)(iii) of this section.

(i) The owner or operator must calculate the daily average condenser outlet temperature in accordance with § 63.773(d)(4).

(ii) The owner or operator shall determine the condenser efficiency for the current operating day using the daily average condenser outlet temperature calculated under paragraph (g)(2)(i) of this section and the condenser performance curve established under paragraph (g)(1) of this section.

(iii) Except as provided in paragraphs (g)(2)(iii) (A) and (B) of this section, at the end of each operating day, the

owner or operator shall calculate the 365-day average HAP emission reduction from the condenser efficiencies determined in paragraph (g)(2)(ii) of this section for the preceding 365 operating days. If the owner or operator uses a combination of process modifications and a condenser in accordance with the requirements of § 63.765(c)(2), the 365-day average HAP emission reduction shall be calculated using the emission reduction achieved through process modifications and the condenser efficiency determined in paragraph (g)(2)(ii) of this section, both for the previous 365 operating days.

(A) After the compliance dates specified in § 63.760(f), an owner or operator with less than 120 days of data for determining average HAP emission reduction, shall calculate the average HAP emission reduction for the first 120 days of operation after the compliance dates. Compliance with the performance requirements is achieved if the 120-day average HAP emission reduction is equal to or greater than 90.0 percent.

(B) After 120 days and no more than 364 days of operation after the compliance dates specified in § 63.760(f), the owner or operator shall calculate the average HAP emission reduction as the HAP emission reduction averaged over the number of days between the current day and the applicable compliance date. Compliance with the performance requirements is achieved if the average HAP emission reduction is equal to or greater than 90.0 percent.

(3) If the owner or operator has data for 365 days or more of operation, compliance is achieved with the emission limitation specified in § 63.771(d)(1)(ii) or § 63.765(c)(2) if the average HAP emission reduction calculated in paragraph (g)(2)(iii) of this section is equal to or greater than 95.0 percent.

§ 63.773 Inspection and monitoring requirements.

(a) This section applies to an owner or operator using air emission controls in accordance with the requirements of §§ 63.765 and 63.766.

(b) [Reserved]

(c) *Cover and closed-vent system inspection and monitoring requirements.* (1) For each closed-vent system or cover required to comply with this section, the owner or operator shall comply with the requirements of paragraphs (c) (2) through (7) of this section.

(2) Except as provided in paragraphs (c) (5) and (6) of this section, each closed-vent system shall be inspected according to the procedures and schedule specified in paragraphs (c)(2)(i) and (ii) of this section, and each cover shall be inspected according to the procedures and schedule specified in paragraph (c)(2)(iii) of this section.

(i) For each closed-vent system joints, seams, or other connections that are permanently or semi-permanently sealed (e.g., a welded joint between two sections of hard piping or a bolted and gasketed ducting flange), the owner or operator shall:

(A) Conduct an initial inspection according to the procedures specified in § 63.772(c) to demonstrate that the closed-vent system operates with no detectable emissions.

(B) Conduct annual visual inspections for defects that could result in air emissions. Defects include, but are not limited to, visible cracks, holes, or gaps in piping; loose connections; or broken or missing caps or other closure devices. The owner or operator shall monitor a component or connection using the procedures in § 63.772(c) to demonstrate that it operates with no detectable emissions following any time the component is repaired or replaced or the connection is unsealed.

(ii) For closed-vent system components other than those specified in paragraph (c)(2)(i) of this section, the owner or operator shall:

(A) Conduct an initial inspection according to the procedures specified in § 63.772(c) to demonstrate that the closed-vent system operates with no detectable emissions.

(B) Conduct annual inspections according to the procedures specified in § 63.772(c) to demonstrate that the components or connections operate with no detectable emissions.

(C) Conduct annual visual inspections for defects that could result in air emissions. Defects include, but are not limited to, visible cracks, holes, or gaps in ductwork; loose connections; or broken or missing caps or other closure devices.

(iii) For each cover, the owner or operator shall:

(A) Conduct visual inspections for defects that could result in air emissions. Defects include, but are not limited to, visible cracks, holes, or gaps in the cover, or between the cover and the separator wall; broken, cracked, or otherwise damaged seals or gaskets on closure devices; and broken or missing hatches, access covers, caps, or other closure devices. In the case where the tank is buried partially or entirely underground, inspection is required only for those portions of the cover that extend to or above the ground surface, and those connections that are on such portions of the cover (e.g., fill ports, access hatches, gauge wells, etc.) and can be opened to the atmosphere.

(B) The inspections shall be conducted initially, following the installation of the cover. Thereafter, the owner or operator shall perform the inspection at least once every calendar year, except as provided in paragraphs (c) (5) and (6) of this section.

(3) In the event that a leak or defect is detected, the owner or operator shall repair the leak or defect as soon as practicable, except as provided in paragraph (c)(4) of this section.

(i) A first attempt at repair shall be made no later than 5 calendar days after the leak is detected.

(ii) Repair shall be completed no later than 15 calendar days after the leak is detected.

(4) Delay of repair of a closed-vent system or cover for which leaks or defects have been detected is allowed if the repair is technically infeasible without a shutdown, as defined in § 63.761, or if the owner or operator determines that emissions resulting from immediate repair would be greater than the fugitive emissions likely to result from delay of repair. Repair of such equipment shall be complete by the end of the next shutdown.

(5) Any parts of the closed-vent system or cover that are designated, as described in paragraphs (c)(5) (i) and (ii) of this section, as unsafe to inspect are exempt from the inspection requirements of paragraphs (c)(2)(i), (ii), and (iii) of this section if:

(i) The owner or operator determines that the equipment is unsafe to inspect because inspecting personnel would be exposed to an imminent or potential danger as a consequence of complying with paragraphs (c)(2)(i), (ii), or (iii) of this section; and

(ii) The owner or operator has a written plan that requires inspection of the equipment as frequently as practicable during safe-to-inspect times.

(6) Any parts of the closed-vent system or cover that are designated, as described in paragraphs (c)(6) (i) and (ii) of this section, as difficult to inspect are exempt from the inspection requirements of paragraphs (c)(2)(i), (ii), and (iii) of this section if:

(i) The owner or operator determines that the equipment cannot be inspected without elevating the inspecting personnel more than 2 meters above a support surface; and

(ii) The owner or operator has a written plan that requires inspection of the equipment at least once every 5 years.

(7) Records shall be maintained as specified in § 63.774(b)(5) through (8).

(d) *Control device monitoring requirements.* (1) For each control device, except as provided for in paragraph (d)(2) of this section, the owner or operator shall install and operate a continuous parameter monitoring system in accordance with the requirements of paragraphs (d)(3) through (9) of this section. The continuous monitoring system shall be designed and operated so that a determination can be made on whether the control device is achieving the applicable performance requirements of § 63.771(d) or § 63.771(e)(3). The continuous parameter monitoring system shall meet the following specifications and requirements:

(i) Each continuous parameter monitoring system shall measure data values at least once every hour and record either:

(A) Each measured data value; or

(B) Each block average value for each 1-hour period or shorter periods calculated from all measured data values during each period. If values are measured more frequently than once per minute, a single value for each minute may be used to calculate the hourly (or shorter period) block average instead of all measured values.

(ii) The monitoring system must be installed, calibrated, operated, and maintained in accordance with the manufacturer's specifications or other written procedures that provide reasonable assurance that the monitoring equipment is operating properly.

(2) An owner or operator is exempt from the monitoring requirements specified in paragraphs (d)(3) through (9) of this section for the following types of control devices:

(i) A boiler or process heater in which all vent streams are introduced with the primary fuel or is used as the primary fuel; or

(ii) A boiler or process heater with a design heat input capacity equal to or greater than 44 megawatts.

(3) The owner or operator shall install, calibrate, operate, and maintain a device equipped with a continuous recorder to measure the values of operating parameters appropriate for the control device as specified in either paragraph (d)(3)(i), (d)(3)(ii), or (d)(3)(iii) of this section.

(i) A continuous monitoring system that measures the following operating parameters as applicable:

(A) For a thermal vapor incinerator, a temperature monitoring device equipped with a continuous recorder. The monitoring device shall have a minimum accuracy of ±2 percent of the temperature being monitored in °C ,or ±2.5 °C, whichever value is greater. The temperature sensor shall be installed at a location in the combustion chamber downstream of the combustion zone.

(B) For a catalytic vapor incinerator, a temperature monitoring device equipped with a continuous recorder. The device shall be capable of monitoring temperature at two locations and have a minimum accuracy of ±2 percent of the temperature being monitored in °C, or ±2.5 °C, whichever value is greater. One temperature sensor shall be installed in the vent stream at the nearest feasible point to the catalyst bed inlet and a second temperature sensor shall be installed in the vent stream at the nearest feasible point to the catalyst bed outlet.

(C) For a flare, a heat sensing monitoring device equipped with a continuous recorder that indicates the continuous ignition of the pilot flame.

(D) For a boiler or process heater with a design heat input capacity of less than 44 megawatts, a temperature monitoring device equipped with a continuous recorder. The temperature monitoring device shall have a minimum accuracy of ±2 percent of the temperature being monitored in °C, or ±2.5 °C, whichever value is greater. The temperature sensor shall be installed at a location in the combustion chamber downstream of the combustion zone.

(E) For a condenser, a temperature monitoring device equipped with a continuous recorder. The temperature monitoring device shall have a minimum accuracy of ±2 percent of the temperature being monitored in °C, or ±2.5 °C, whichever value is greater. The temperature sensor shall be installed at a location in the exhaust vent stream from the condenser.

(F) For a regenerative-type carbon adsorption system:

(*1*) A continuous parameter monitoring system to measure and record the average total regeneration stream mass flow or volumetric flow during each carbon bed regeneration cycle. The integrating regenerating stream flow monitoring device must have an accuracy of ±10 percent; and

(*2*) A continuous parameter monitoring system to measure and record the average carbon bed temperature for the duration of the carbon bed steaming cycle and to measure the actual carbon bed temperature after regeneration and within 15 minutes of completing the cooling cycle. The temperature monitoring device shall have a minimum accuracy of ±2 percent of the temperature being monitored in °C, or ±2.5 °C, whichever value is greater.

(G) For a nonregenerative-type carbon adsorption system, the owner or operator shall monitor the design carbon replacement interval established using a performance test performed in accordance with § 63.772(e)(3) or a design analysis in accordance with § 63.772(e)(4)(i)(F) and shall be based on the total carbon working capacity of the control device and source operating schedule.

(ii) A continuous monitoring system that measures the concentration level of organic compounds in the exhaust vent stream from the control device using an organic monitoring device equipped with a continuous recorder. The monitor must meet the requirements of Performance Specification 8 or 9 of appendix B of 40 CFR part 60 and must be installed, calibrated, and maintained according to the manufacturer's specifications.

(iii) A continuous monitoring system that measures alternative operating parameters other than those specified in paragraph (d)(3)(i) or (d)(3)(ii) of this section upon approval of the Administrator as specified in § 63.8(f)(1) through (5).

(4) Using the data recorded by the monitoring system, the owner or operator must calculate the daily average value for each monitored operating parameter for each operating day. If the HAP emissions unit operation is continuous, the operating day is a 24-hour period. If HAP emissions unit operation is not continuous, the operating day is the total number of hours of control device operation per 24-hour period. Valid data points must be available for 75 percent of the operating hours in an operating day to compute the daily average.

(5) For each operating parameter monitor installed in accordance with the requirements of paragraph (d)(3) of this section, the owner or operator shall comply with paragraph (d)(5)(i) of this section for all control devices except for condensers, and when condensers are installed, the owner or operator shall also comply with paragraph (d)(5)(ii) of this section.

(i) The owner or operator shall establish a minimum operating parameter value or a maximum operating parameter value, as appropriate for the control device, to define the conditions at which the control device must be operated to continuously achieve the applicable performance requirements of § 63.771(d)(1) or § 63.771(e)(3)(ii). Each minimum or maximum operating parameter value shall be established as follows:

(A) If the owner or operator conducts performance tests in accordance with the requirements of § 63.772(e)(3) to demonstrate that the control device achieves the applicable performance requirements specified in § 63.771(d)(1) or § 63.771(e)(3)(ii), then the minimum operating parameter value or the maximum operating parameter value shall be established based on values measured during the performance test and supplemented, as necessary, by control device design analysis or control device manufacturer recommendations or a combination of both.

(B) If the owner or operator uses a control device design analysis in accordance with the requirements of § 63.772(e)(4) to demonstrate that the control device achieves the applicable performance requirements specified in § 63.771(d)(1) or (e)(3)(ii), then the minimum operating parameter value or the maximum operating parameter value shall be established based on the control device design analysis and may be supplemented by the control device manufacturer's recommendations.

(ii) The owner or operator shall establish a condenser performance curve showing the relationship between condenser outlet temperature and condenser control efficiency. The curve shall be established as follows:

(A) If the owner or operator conducts a performance test in accordance with the requirements of § 63.772(e)(3) to demonstrate that the condenser achieves the applicable performance requirements in § 63.771(d)(1) or (e)(3)(ii), then the condenser performance curve shall be based on values measured during the performance test and supplemented as necessary by control device design analysis, or control device manufacturer's recommendations, or a combination or both.

(B) If the owner or operator uses a control device design analysis in accordance with the requirements of § 63.772(e)(4)(i)(D) to demonstrate that the condenser achieves the applicable performance requirements specified in § 63.771(d)(1) or (e)(3)(ii), then the condenser performance curve shall be based on the condenser design analysis and may be supplemented by the control device manufacturer's recommendations.

(C) As an alternative to paragraphs (d)(5)(ii)(A) and (B) of this section, the owner or operator may elect to use the procedures documented in the GRI report entitled, "Atmospheric Rich/Lean Method for Determining Glycol Dehydrator Emissions" (GRI-95/0368.1) as inputs for the model GRI-GLYCalc™, Version 3.0 or higher, to generate a condenser performance curve.

(6) An excursion for a given control device is determined to have occurred when the monitoring data or lack of monitoring data result in any one of the criteria specified in paragraphs (d)(6)(i) through (d)(6)(v) of this section being met. When multiple operating parameters are monitored for the same control device and during the same operating day and more than one of these operating parameters meets an excursion criterion specified in paragraphs (d)(6)(i) through (d)(6)(v) of this section, then a single excursion is determined to have occurred for the control device for that operating day.

(i) An excursion occurs when the daily average value of a monitored operating parameter is less than the minimum operating parameter limit (or, if applicable, greater than the maximum operating parameter limit) established for the operating parameter in accordance with the requirements of paragraph (d)(5)(i) of this section.

(ii) An excursion occurs when the 365-day average condenser efficiency calculated according to the requirements specified in § 63.772(g)(2)(iii) is less than 95.0 percent.

(iii) If an owner or operator has less than 365 days of data, an excursion occurs when the average condenser efficiency calculated according to the procedures specified in § 63.772(g)(2)(iii)(A) or (B) is less than 90.0 percent.

(iv) An excursion occurs when the monitoring data are not available for at least 75 percent of the operating hours.

(v) If the closed-vent system contains one or more bypass devices that could be used to divert all or a portion of the gases, vapors, or fumes from entering the control device, an excursion occurs when:

(A) For each bypass line subject to § 63.771(c)(3)(i)(A) the flow indicator indicates that flow has been detected and that the stream has been diverted away from the control device to the atmosphere.

(B) For each bypass line subject to § 63.771(c)(3)(i)(B), if the seal or closure mechanism has been broken, the bypass line valve position has changed, the key for the lock-and-key type lock has been checked out, or the car-seal has broken.

(7) For each excursion, except as provided for in paragraph (d)(8) of this section, the owner or operator shall be deemed to have failed to have applied control in a manner that achieves the required operating parameter limits. Failure to achieve the required operating parameter limits is a violation of this standard.

(8) An excursion is not a violation of the operating parameter limit as specified in paragraphs (d)(8)(i) and (d)(8)(ii) of this section.

(i) An excursion does not count toward the number of excused excursions allowed under paragraph (d)(8)(ii) of this section when the excursion occurs during any one of the following periods:

(A) During a period of startup, shutdown, or malfunction when the affected facility is operated during such period in accordance with the facility's startup, shutdown, and malfunction plan; or

(B) During periods of non-operation of the unit or the process that is vented to the control device (resulting in cessation of HAP emissions to which the monitoring applies).

(ii) For each control device, or combinations of control devices installed on the same HAP emissions unit, one excused excursion is allowed per semiannual period for any reason. The initial semiannual period is the 6-month reporting period addressed by the first Periodic Report submitted by the owner or operator in accordance with § 63.775(e) of this subpart.

(9) Nothing in paragraphs (d)(1) through (d)(8) of this section shall be construed to allow or excuse a monitoring parameter excursion caused by any activity that violates other applicable provisions of this subpart.

§ 63.774 Recordkeeping requirements.

(a) The recordkeeping provisions of 40 CFR part 63, subpart A, that apply and those that do not apply to owners and operators of sources subject to this subpart are listed in Table 2 of this subpart.

(b) Except as specified in paragraphs (c) and (d) of this section, each owner or operator of a facility subject to this subpart shall maintain the records specified in paragraphs (b)(1) through (b)(11) of this section:

(1) The owner or operator of an affected source subject to the provisions of this subpart shall maintain files of all information (including all reports and notifications) required by this subpart. The files shall be retained for at least 5 years following the date of each occurrence, measurement, maintenance, corrective action, report or period.

(i) All applicable records shall be maintained in such a manner that they can be readily accessed.

(ii) The most recent 12 months of records shall be retained on site or shall be accessible from a central location by

computer or other means that provides access within 2 hours after a request.

(iii) The remaining 4 years of records may be retained offsite.

(iv) Records may be maintained in hard copy or computer-readable form including, but not limited to, on paper, microfilm, computer, floppy disk, magnetic tape, or microfiche.

(2) Records specified in § 63.10(b)(2);

(3) Records specified in § 63.10(c) for each monitoring system operated by the owner or operator in accordance with the requirements of § 63.773(d). Notwithstanding the requirements of § 63.10(c), monitoring data recorded during periods identified in paragraphs (b)(3)(i) through (b)(3)(iv) of this section shall not be included in any average or percent leak rate computed under this subpart. Records shall be kept of the times and durations of all such periods and any other periods during process or control device operation when monitors are not operating.

(i) Monitoring system breakdowns, repairs, calibration checks, and zero (low-level) and high-level adjustments;

(ii) Startups, shutdowns, or malfunctions events. During startups, shutdowns, or malfunction events, the owner or operator shall maintain records indicating whether or not the startup, shutdown or malfunction plan required under § 63.762(d), was followed.

(iii) Periods of non-operation resulting in cessation of the emissions to which the monitoring applies; and

(iv) Excursions due to invalid data as defined in § 63.773(d)(6)(iv).

(4) Each owner or operator using a control device to comply with § 63.764 of this subpart shall keep the following records up-to-date and readily accessible:

(i) Continuous records of the equipment operating parameters specified to be monitored under § 63.773(d) of this subpart or specified by the Administrator in accordance with § 63.773(d)(3)(iii) of this subpart. For flares, the hourly records and records of pilot flame outages specified in § 63.773(d)(3)(i)(C) of this subpart shall be maintained in place of continuous records.

(ii) Records of the daily average value of each continuously monitored parameter for each operating day determined according to the procedures specified in § 63.773(d)(4) of this subpart, except as specified in paragraphs (b)(4)(ii)(A) and (B) of this section.

(A) For flares, records of the times and duration of all periods during which all pilot flames are absent shall be kept rather than daily averages.

(B) For condensers installed to comply with § 63.765, records of the annual 365-day rolling average condenser efficiency determined under § 63.772(g) shall be kept in addition to the daily averages.

(iii) Hourly records of whether the flow indicator specified under § 63.771(c)(3)(i)(A) was operating and whether flow was detected at any time during the hour, as well as records of the times and durations of all periods when the vent stream is diverted from the control device or the monitor is not operating.

(iv) Where a seal or closure mechanism is used to comply with § 63.771(c)(3)(i)(B), hourly records of flow are not required. In such cases, the owner or operator shall record that the monthly visual inspection of the seals or closure mechanism has been done, and shall record the duration of all periods when the seal mechanism is broken, the bypass line valve position has changed, or the key for a lock-and-key type lock has been checked out, and records of any car-seal that has broken.

(5) Records identifying all parts of the cover or closed-vent system that are designated as unsafe to inspect in accordance with § 63.773(c)(5), an explanation of why the equipment is unsafe to inspect, and the plan for inspecting the equipment.

(6) Records identifying all parts of the cover or closed-vent system that are designated as difficult to inspect in accordance with § 63.773(c)(6), an explanation of why the equipment is difficult to inspect, and the plan for inspecting the equipment.

(7) For each inspection conducted in accordance with § 63.773(c), during which a leak or defect is detected, a record of the information specified in paragraphs (b)(7)(i) through (b)(7)(viii) of this section.

(i) The instrument identification numbers, operator name or initials, and identification of the equipment.

(ii) The date the leak or defect was detected and the date of the first attempt to repair the leak or defect.

(iii) Maximum instrument reading measured by the method specified in § 63.772(c) after the leak or defect is successfully repaired or determined to be nonrepairable.

(iv) "Repair delayed" and the reason for the delay if a leak or defect is not repaired within 15 calendar days after discovery of the leak or defect.

(v) The name, initials, or other form of identification of the owner or operator (or designee) whose decision it was that repair could not be effected without a shutdown.

(vi) The expected date of successful repair of the leak or defect if a leak or defect is not repaired within 15 calendar days.

(vii) Dates of shutdowns that occur while the equipment is unrepaired.

(viii) The date of successful repair of the leak or defect.

(8) For each inspection conducted in accordance with § 63.773(c) during which no leaks or defects are detected, a record that the inspection was performed, the date of the inspection, and a statement that no leaks were detected.

(9) Records identifying ancillary equipment and compressors that are subject to and controlled under the provisions of 40 CFR part 60, subpart KKK; 40 CFR part 61, subpart V; or 40 CFR part 63, subpart H.

(10) Records of glycol dehydration unit baseline operations calculated as required under § 63.771(e)(1).

(11) Records required in § 63.771(e)(3)(i) documenting that the facility continues to operate under the conditions specified in § 63.771(e)(2).

(c) An owner or operator that elects to comply with the benzene emission limit specified in § 63.765(b)(1)(ii) shall document, to the Administrator's satisfaction, the following items:

(1) The method used for achieving compliance and the basis for using this compliance method; and

(2) The method used for demonstrating compliance with 0.90 megagrams per year of benzene.

(3) Any information necessary to demonstrate compliance as required in the methods specified in paragraphs (c)(1) and (c)(2) of this section.

(d) (1) An owner or operator that is exempt from control requirements under § 63.764(e)(1) shall maintain the records specified in paragraph (d)(1)(i) or (d)(1)(ii) of this section, as appropriate, for each glycol dehydration unit that is not controlled according to the requirements of § 63.764(c)(1)(i).

(i) The actual annual average natural gas throughput (in terms of natural gas flowrate to the glycol dehydration unit per day) as determined in accordance with § 63.772(b)(1), or

(ii) The actual average benzene emissions (in terms of benzene emissions per year) as determined in accordance with § 63.772(b)(2).

(2) An owner or operator that is exempt from the control requirements under § 63.764(e)(2) of this subpart shall maintain the following records:

(i) Information and data used to demonstrate that a piece of equipment is not in VHAP service or not in wet gas service shall be recorded in a log that is kept in a readily accessible location.

(ii) Identification and location of equipment, located at a natural gas processing plant subject to this subpart, that is in VHAP service less than 300 hours per year.

(e) Record the following when using a flare to comply with § 63.771(d):

(1) Flare design (i.e., steam-assisted, air-assisted, or non-assisted);

(2) All visible emission readings, heat content determinations, flowrate measurements, and exit velocity determinations made during the compliance determination required by § 63.772(e)(2); and

(3) All periods during the compliance determination when the pilot flame is absent.

§ 63.775 Reporting requirements.

(a) The reporting provisions of subpart A of this part, that apply and those that do not apply to owners and operators of sources subject to this subpart are listed in Table 2 of this subpart.

(b) Each owner or operator of a major source subject to this subpart shall submit the information listed in paragraphs (b)(1) through (b)(6) of this section, except as provided in paragraphs (b)(7) and (b)(8) of this section.

(1) The initial notifications required for existing affected sources under § 63.9(b)(2) shall be submitted by 1 year after an affected source becomes subject to the provisions of this subpart or by June 17, 2000, whichever is later. Affected sources that are major sources on or before June 17, 2000 and plan to be area sources by June 17, 2002 shall include in this notification a brief, nonbinding description of a schedule for the action(s) that are planned to achieve area source status.

(2) The date of the performance evaluation as specified in § 63.8(e)(2), required only if the owner or operator is required by the Administrator to conduct a performance evaluation for a continuous monitoring system. A separate notification of the performance evaluation is not required if it is included in the initial notification submitted in accordance with paragraph (b)(1) of this section.

(3) The planned date of a performance test at least 60 days before the test in accordance with § 63.7(b). Unless requested by the Administrator, a site-specific test plan is not required by this subpart. If requested by the Administrator, the owner or operator must also submit the site-specific test plan required by § 63.7(c) with the notification of the performance test. A separate notification of the performance test is not required if it is included in the initial notification submitted in accordance with paragraph (b)(1) of this section.

(4) A Notification of Compliance Status report as described in paragraph (d) of this section;

(5) Periodic Reports as described in paragraph (e) of this section; and

(6) Startup, shutdown, and malfunction reports specified in § 63.10(d)(5) shall be submitted as required. Separate startup, shutdown, and malfunction reports as described in § 63.10(d)(5) are not required if the information is included in the Periodic Report specified in paragraph (e) of this section.

(7) Each owner or operator of a glycol dehydration unit subject to this subpart that is exempt from the control requirements for glycol dehydration unit process vents in § 63.765, is exempt from all reporting requirements for major sources in this subpart, for that unit.

(8) Each owner or operator of ancillary equipment and compressors subject to this subpart that are exempt from the control requirements for equipment leaks in § 63.769, are exempt from all reporting requirements for major sources in this subpart, for that equipment.

(c) [Reserved]

(d) Each owner or operator of a source subject to this subpart shall submit a Notification of Compliance Status Report as required under § 63.9(h) within 180 days after the compliance date specified in § 63.760(f). In addition to the information required under § 63.9(h), the Notification of Compliance Status Report shall include the information specified in paragraphs (d)(1) through (d)(11) of this section. This information may be submitted in an operating permit application, in an amendment to an operating permit application, in a separate submittal, or in any combination of the three. If all of the information required under this paragraph has been submitted at any time prior to 180 days after the applicable compliance dates specified in § 63.760(f), a separate Notification of Compliance Status Report is not required. If an owner or operator submits the information specified in paragraphs (d)(1) through (d)(11) of this section at different times, and/or different submittals, later submittals may refer to earlier submittals instead of duplicating and resubmitting the previously submitted information.

(1) If a closed-vent system and a control device other than a flare are used to comply with § 63.764, the owner or operator shall submit:

(i) The design analysis documentation specified in § 63.772(e)(4) of this subpart, if the owner or operator elects to prepare a design analysis; or

(ii) If the owner or operator elects to conduct a performance test, the performance test results including the information specified in paragraphs (d)(1)(ii)(A) and (B) of this section. Results of a performance test conducted prior to the compliance date of this subpart can be used provided that the test was conducted using the methods specified in § 63.772(e)(3) and that the test conditions are representative of current operating conditions.

(A) The percent reduction of HAP or TOC, or the outlet concentration of HAP or TOC (parts per million by volume on a dry basis), determined as specified in § 63.772(e)(3) of this subpart; and

(B) The value of the monitored parameters specified in § 63.773(d) of this subpart, or a site-specific parameter approved by the permitting agency, averaged over the full period of the performance test.

(2) If a closed-vent system and a flare are used to comply with § 63.764, the owner or operator shall submit performance test results including the information in paragraphs (d)(2) (i) and (ii) of this section.

(i) All visible emission readings, heat content determinations, flowrate measurements, and exit velocity determinations made during the compliance determination required by § 63.772(e)(2) of this subpart, and

(ii) A statement of whether a flame was present at the pilot light over the full period of the compliance determination.

(3) For each owner or operator subject to the provisions specified in § 63.769, the owner or operator shall submit the information required by § 61.247(a), except that the initial report required in § 61.247(a) shall be submitted as a part of the Notification of Compliance Status Report required in paragraph (d) of this section. The owner or operator shall also submit the information specified in paragraphs (d)(3) (i) and (ii) of this section.

(i) The number of each equipment (e.g., valves, pumps, etc.) excluding equipment in vacuum service, and

(ii) Any change in the information submitted in this paragraph shall be provided to the Administrator as a part of subsequent Periodic Reports described in paragraph (e)(2)(iv) of this section.

(4) The owner or operator shall submit one complete test report for each test method used for a particular source.

(i) For additional tests performed using the same test method, the results

specified in paragraph (d)(1)(ii) of this section shall be submitted, but a complete test report is not required.

(ii) A complete test report shall include a sampling site description, description of sampling and analysis procedures and any modifications to standard procedures, quality assurance procedures, record of operating conditions during the test, record of preparation of standards, record of calibrations, raw data sheets for field sampling, raw data sheets for field and laboratory analyses, documentation of calculations, and any other information required by the test method.

(5) For each control device other than a flare used to meet the requirements of § 63.764, the owner or operator shall submit the information specified in paragraphs (d)(5) (i) through (iii) of this section for each operating parameter required to be monitored in accordance with the requirements of § 63.773(d).

(i) The minimum operating parameter value or maximum operating parameter value, as appropriate for the control device, established by the owner or operator to define the conditions at which the control device must be operated to continuously achieve the applicable performance requirements of § 63.771(d)(1) or (e)(3)(ii).

(ii) An explanation of the rationale for why the owner or operator selected each of the operating parameter values established in § 63.773(d)(5). This explanation shall include any data and calculations used to develop the value and a description of why the chosen value indicates that the control device is operating in accordance with the applicable requirements of § 63.771(d)(1) or § 63.771(e)(3)(ii).

(iii) A definition of the source's operating day for purposes of determining daily average values of monitored parameters. The definition shall specify the times at which an operating day begins and ends.

(6) Results of any continuous monitoring system performance evaluations shall be included in the Notification of Compliance Status Report.

(7) After a title V permit has been issued to the owner or operator of an affected source, the owner or operator of such source shall comply with all requirements for compliance status reports contained in the source's title V permit, including reports required under this subpart. After a title V permit has been issued to the owner or operator of an affected source, and each time a notification of compliance status is required under this subpart, the owner or operator of such source shall submit the notification of compliance status to the appropriate permitting authority following completion of the relevant compliance demonstration activity specified in this subpart.

(8) The owner or operator that elects to comply with the requirements of § 63.765(b)(1)(ii) shall submit the records required under § 63.774(c).

(9) The owner or operator shall submit an analysis demonstrating whether an affected source is a major source using the maximum throughput calculated according to § 63.760(a)(1).

(10) The owner or operator shall submit a statement as to whether the source has complied with the requirements of this subpart.

(11) The owner or operator shall submit the analysis prepared under § 63.771(e)(2) to demonstrate the conditions by which the facility will be operated to achieve an overall HAP emission reduction of 95.0 percent through process modifications or a combination of process modifications and one or more control devices.

(e) *Periodic Reports.* An owner or operator shall prepare Periodic Reports in accordance with paragraphs (e) (1) and (2) of this section and submit them to the Administrator.

(1) An owner or operator shall submit Periodic Reports semiannually, beginning 60 operating days after the end of the applicable reporting period. The first report shall be submitted no later than 240 days after the date the Notification of Compliance Status Report is due and shall cover the 6-month period beginning on the date the Notification of Compliance Status Report is due.

(2) The owner or operator shall include the information specified in paragraphs (e)(2)(i) through (ix) of this section, as applicable.

(i) The information required under § 63.10(e)(3). For the purposes of this subpart and the information required under § 63.10(e)(3), excursions (as defined in § 63.773(d)(6)) shall be considered excess emissions.

(ii) A description of all excursions as defined in § 63.773(d)(6) of this subpart that have occurred during the 6-month reporting period.

(A) For each excursion caused when the daily average value of a monitored operating parameter is less than the minimum operating parameter limit (or, if applicable, greater than the maximum operating parameter limit), as specified in § 63.773(d)(6)(i), the report must include the daily average values of the monitored parameter, the applicable operating parameter limit, and the date and duration of the period that the excursion occurred.

(B) For each excursion caused when the 365-day average condenser control efficiency is less than 95.0 percent, as specified in § 63.773(d)(6)(ii), the report must include the 365-day average values of the condenser control efficiency, and the date and duration of the period that the excursion occurred.

(C) For each excursion caused when condenser control efficiency is less than 90.0 percent, as calculated according to the procedures specified in § 63.772(g)(2)(iii) (A) or (B), the report must include the average values of the condenser control efficiency, and the date and duration of the period that the excursion occurred.

(D) For each excursion caused by lack of monitoring data, as specified in § 63.773(d)(6)(iii), the report must include the date and duration of the period when the monitoring data were not collected and the reason why the data were not collected.

(iii) For each inspection conducted in accordance with § 63.773(c) during which a leak or defect is detected, the records specified in § 63.774(b)(7) must be included in the next Periodic Report.

(iv) For each owner or operator subject to the provisions specified in § 63.769, the owner or operator shall comply with the reporting requirements specified in 40 CFR 61.247, except that the Periodic Reports shall be submitted on the schedule specified in paragraph (e)(1) of this section.

(v) For each closed-vent system with a bypass line subject to § 63.771(c)(3)(i)(A), records required under § 63.774(b)(4)(iii) of all periods when the vent stream is diverted from the control device through a bypass line. For each closed-vent system with a bypass line subject to § 63.771(c)(3)(i)(B), records required under § 63.774(b)(4)(iv) of all periods in which the seal mechanism is broken, the bypass valve position has changed, or the key to unlock the bypass line valve was checked out.

(vi) If an owner or operator elects to comply with § 63.765(b)(1)(ii), the records required under § 63.774(c)(3).

(vii) The information in paragraphs (e)(2)(vii) (A) and (B) of this section shall be stated in the Periodic Report, when applicable.

(A) No excursions.

(B) No continuous monitoring system has been inoperative, out of control, repaired, or adjusted.

(viii) Any change in compliance methods as specified in § 63.772(f).

(ix) If the owner or operator elects to comply with § 63.765(c)(2), the records required under § 63.774(b)(11).

(f) *Notification of process change.* Whenever a process change is made, or

a change in any of the information submitted in the Notification of Compliance Status Report, the owner or operator shall submit a report within 180 days after the process change is made or as a part of the next Periodic Report as required under paragraph (e) of this section, whichever is sooner. The report shall include:

(1) A brief description of the process change;

(2) A description of any modification to standard procedures or quality assurance procedures;

(3) Revisions to any of the information reported in the original Notification of Compliance Status Report under paragraph (d) of this section; and

(4) Information required by the Notification of Compliance Status Report under paragraph (d) of this section for changes involving the addition of processes or equipment.

§ 63.776 Delegation of authority.

(a) In delegating implementation and enforcement authority to a State under section 112(l) of the Act, the authorities contained in paragraph (b) of this section shall be retained by the Administrator and not transferred to a State.

(b) Authorities will not be delegated to States for §§ 63.772 and 63.777 of this subpart.

§ 63.777 Alternative means of emission limitation.

(a) If, in the judgment of the Administrator, an alternative means of emission limitation will achieve a reduction in HAP emissions at least equivalent to the reduction in HAP emissions from that source achieved under the applicable requirements in §§ 63.764 through 63.771, the Administrator will publish in the **Federal Register** a notice permitting the use of the alternative means for purposes of compliance with that requirement. The notice may condition the permission on requirements related to the operation and maintenance of the alternative means.

(b) Any notice under paragraph (a) of this section shall be published only after public notice and an opportunity for a hearing.

(c) Any person seeking permission to use an alternative means of compliance under this section shall collect, verify, and submit to the Administrator information demonstrating that the alternative achieves equivalent emission reductions.

§ 63.778 [Reserved]

§ 63.779 [Reserved]

Appendix to Subpart HH—Tables

TABLE 1 TO SUBPART HH.—LIST OF HAZARDOUS AIR POLLUTANTS FOR SUBPART HH

CAS Number[a]	Chemical name
75070 ...	Acetaldehyde
71432 ...	Benzene (includes benzene in gasoline)
75150 ...	Carbon disulfide
463581	Carbonyl sulfide
100414	Ethyl benzene
107211	Ethylene glycol
50000 ...	Formaldehyde
110543	n-Hexane
91203 ...	Naphthalene
108883	Toluene
540841	2,2,4-Trimethylpentane
1330207	Xylenes (isomers and mixture)
95476 ...	o-Xylene
108383	m-Xylene
106423	p-Xylene

[a] CAS numbers refer to the Chemical Abstracts Services registry number assigned to specific compounds, isomers, or mixtures of compounds.

TABLE 2 TO SUBPART HH.—APPLICABILITY OF 40 CFR PART 63 GENERAL PROVISIONS TO SUBPART HH

General provisions reference	Applicable to subpart HH	Explanation
§ 63.1(a)(1)	Yes	
§ 63.1(a)(2)	Yes	
§ 63.1(a)(3)	Yes	
§ 63.1(a)(4)	Yes	
§ 63.1(a)(5)	No	Section reserved.
§ 63.1(a)(6) through (a)(8)	Yes	
§ 63.1(a)(9)	No	Section reserved.
§ 63.1(a)(10)	Yes	
§ 63.1(a)(11)	Yes	
§ 63.1(a)(12) through (a)(14)	Yes	
§ 63.1(b)(1)	No	Subpart HH specifies applicability.
§ 63.1(b)(2)	Yes	
§ 63.1(b)(3)	No	
§ 63.1(c)(1)	No	Subpart HH specifies applicability.
§ 63.1(c)(2)	No	
§ 63.1(c)(3)	No	Section reserved.
§ 63.1(c)(4)	Yes	
§ 63.1(c)(5)	Yes	
§ 63.1(d)	No	Section reserved.
§ 63.1(e)	Yes	
§ 63.2	Yes	Except definition of major source is unique for this source category and there are additional definitions in subpart HH.
§ 63.3(a) through (c)	Yes	
§ 63.4(a)(1) through (a)(3)	Yes	
§ 63.4(a)(4)	No	Section reserved.
§ 63.4(a)(5)	Yes	
§ 63.4(b)	Yes	
§ 63.4(c)	Yes	
§ 63.5(a)(1)	Yes	
§ 63.5(a)(2)	No	Preconstruction review required only for major sources that commence construction after promulgation of the standard.
§ 63.5(b)(1)	Yes	
§ 63.5(b)(2)	No	Section reserved.
§ 63.5(b)(3)	Yes	

TABLE 2 TO SUBPART HH.—APPLICABILITY OF 40 CFR PART 63 GENERAL PROVISIONS TO SUBPART HH—Continued

General provisions reference	Applicable to subpart HH	Explanation
§ 63.5(b)(4)	Yes	
§ 63.5(b)(5)	Yes	
§ 63.5(b)(6)	Yes	
§ 63.5(c)	No	Section reserved.
§ 63.5(d)(1)	Yes	
§ 63.5(d)(2)	Yes	
§ 63.5(d)(3)	Yes	
§ 63.5(d)(4)	Yes	
§ 63.5(e)	Yes	
§ 63.5(f)(1)	Yes	
§ 63.5(f)(2)	Yes	
§ 63.6(a)	Yes	
§ 63.6(b)(1)	Yes	
§ 63.6(b)(2)	Yes	
§ 63.6(b)(3)	Yes	
§ 63.6(b)(4)	Yes	
§ 63.6(b)(5)	Yes	
§ 63.6(b)(6)	No	Section reserved.
§ 63.6(b)(7)	Yes	
§ 63.6(c)(1)	Yes	
§ 63.6(c)(2)	Yes	
§ 63.6(c)(3) through (c)(4)	No	Section reserved.
§ 63.6(c)(5)	Yes	
§ 63.6(d)	No	Section reserved.
§ 63.6(e)	Yes	Except as otherwise specified.
§ 63.6(e)(1)(i)	No	Addressed in § 63.762.
§ 63.6(e)(1)(ii)	Yes	
§ 63.6(e)(1)(iii)	Yes	
§ 63.6(e)(2)	Yes	
§ 63.6(e)(3)(i)	Yes	Except as otherwise specified.
§ 63.6(e)(3)(i)(A)	No	Addressed by § 63.762(c).
§ 63.6(e)(3)(i)(B)	Yes	
§ 63.6(e)(3)(i)(C)	Yes	
§ 63.6(e)(3)(ii) through (3)(vi)	Yes	
§ 63.6(e)(3)(vii).		
§ 63.6(e)(3)(vii)(A)	Yes	
§ 63.6(e)(3)(vii)(B)	Yes	Except that the plan must provide for operation in compliance with § 63.762(c).
§ 63.6(e)(3)(vii)(C)	Yes	
§ 63.6(e)3)(viii)	Yes	
§ 63.6(f)(1)	Yes	
§ 63.6(f)(2)	Yes	
§ 63.6(f)(3)	Yes	
§ 63.6(g)	Yes	
§ 63.6(h)	No	Subpart HH does not require continuous emissions monitoring systems.
§ 63.6(i)(1) through (i)(14)	Yes	
§ 63.6(i)(15)	No	Section reserved.
§ 63.6(i)(16)	Yes	
§ 63.6(j)	Yes	
§ 63.7(a)(1)	Yes	
§ 63.7(a)(2)	Yes	
§ 63.7(a)(3)	Yes	
§ 63.7(b)	Yes	
§ 63.7(c)	Yes	
§ 63.7(d)	Yes	
§ 63.7(e)(1)	Yes	
§ 63.7(e)(2)	Yes	
§ 63.7(e)(3)	Yes	
§ 63.7(e)(4)	Yes	
§ 63.7(f)	Yes	
§ 63.7(g)	Yes	
§ 63.7(h)	Yes	
§ 63.8(a)(1)	Yes	
§ 63.8(a)(2)	Yes	
§ 63.8(a)(3)	No	Section reserved.
§ 63.8(a)(4)	Yes	
§ 63.8(b)(1)	Yes	
§ 63.8(b)(2)	Yes	
§ 63.8(b)(3)	Yes	
§ 63.8(c)(1)	Yes	
§ 63.8(c)(2)	Yes	
§ 63.8(c)(3)	Yes	

TABLE 2 TO SUBPART HH.—APPLICABILITY OF 40 CFR PART 63 GENERAL PROVISIONS TO SUBPART HH—Continued

General provisions reference	Applicable to subpart HH	Explanation
§ 63.8(c)(4)	No	
§ 63.8(c)(5) through (c)(8)	Yes	
§ 63.8(d)	Yes	
§ 63.8(e)	Yes	Subpart HH does not specifically require continuous emissions monitor performance evaluations, however, the Administrator can request that one be conducted.
§ 63.8(f)(1) through (f)(5)	Yes	
§ 63.8(f)(6)	No	Subpart HH does not require continuous emissions monitoring.
§ 63.8(g)	No	Subpart HH specifies continuous monitoring system data reduction requirements.
§ 63.9(a)	Yes	
§ 63.9(b)(1)	Yes	
§ 63.9(b)(2)	Yes	Sources are given 1 year (rather than 120 days) to submit this notification.
§ 63.9(b)(3)	Yes	
§ 63.9(b)(4)	Yes	
§ 63.9(b)(5)	Yes	
§ 63.9(c)	Yes	
§ 63.9(d)	Yes	
§ 63.9(e)	Yes	
§ 63.9(f)	Yes	
§ 63.9(g)	Yes	
§ 63.9(h)(1) through (h)(3)	Yes	
§ 63.9(h)(4)	No	Section reserved.
§ 63.9(h)(5) through (h)(6)	Yes	
§ 63.9(i)	Yes	
§ 63.9(j)	Yes	
§ 63.10(a)	Yes	
§ 63.10(b)(1)	Yes	
§ 63.10(b)(2)	Yes	
§ 63.10(b)(3)	No	
§ 63.10(c)(1)	Yes	
§ 63.10(c)(2) through (c)(4)	No	Sections reserved.
§ 63.10(c)(5) Through (c)(8)	Yes	
§ 63.10(c)(9)	No	Section reserved.
§ 63.10(c)(10) through (c)(15)	Yes	
§ 63.10(d)(1)	Yes	
§ 63.10(d)(2)	Yes	
§ 63.10(d)(3)	Yes	
§ 63.10(d)(4)	Yes	
§ 63.10(d)(5)	Yes	Subpart HH requires major sources to submit a startup, shutdown and malfunction report semi-annually.
§ 63.10(e)(1)	Yes	
§ 63.10(e)(2)	Yes	
§ 63.10(e)(3)(i)	Yes	Subpart HH requires major sources to submit Periodic Reports semi-annually.
§ 63.10(e)(3)(i)(A)	Yes	
§ 63.10(e)(3)(i)(B)	Yes	
§ 63.10(e)(3)(i)(C)	No	Subpart HH does not require quarterly reporting for excess emissions.
§ 63.10(e)(3)(ii) through (viii)	Yes	
§ 63.10(f)	Yes	
§ 63.11(a) and (b)	Yes	
§ 63.12(a) through (c)	Yes	
§ 63.13(a) through (c)	Yes	
§ 63.14(a) and (b)	Yes	
§ 63.15(a) and (b)	Yes	

PART 63—NATIONAL EMISSION STANDARDS FOR HAZARDOUS AIR POLLUTANTS FOR SOURCE CATEGORIES

3. Part 63 is amended by adding subpart HHH to read as follows:

Subpart HHH—National Emission Standards for Hazardous Air Pollutants From Natural Gas Transmission and Storage Facilities

Sec.

63.1270 Applicability and designation of affected source.
63.1271 Definitions.
63.1272 Startups, shutdowns, and malfunctions.
63.1273 [Reserved]
63.1274 General standards.
63.1275 Glycol dehydration unit process vent standards.
63.1276–63.1280 [Reserved]
63.1281 Control equipment requirements.
63.1282 Test methods, compliance procedures, and compliance demonstrations.
63.1283 Inspection and monitoring requirements.
63.1284 Recordkeeping requirements.
63.1285 Reporting requirements.
63.1286 Delegation of authority.
63.1287 Alternative means of emission limitation.

63.1288 [Reserved]
63.1289 [Reserved]
Appendix to Subpart HHH—Tables

Subpart HHH—National Emission Standards for Hazardous Air Pollutants From Natural Gas Transmission and Storage Facilities

§ 63.1270 Applicability and designation of affected source.

(a) This subpart applies to owners and operators of natural gas transmission and storage facilities that transport or store natural gas prior to entering the pipeline to a local distribution company or to a final end user (if there is no local distribution company), and that are major sources of hazardous air pollutants (HAP) emissions as determined using the maximum natural gas throughput calculated in either paragraph (a)(1) or (a)(2) of this section and paragraphs (a)(3) and (a)(4) of this section. A compressor station that transports natural gas prior to the point of custody transfer, or to a natural gas processing plant (if present) is considered a part of the oil and natural gas production source category. A facility that is determined to be an area source, based on emission estimates using the maximum natural gas throughput calculated as specified in paragraph (a)(1) or (a)(2) of this section, but subsequently increases emissions or potential to emit above the major source levels (without first obtaining and complying with other limitations that keep its potential to emit HAP below major source levels, becomes a major source and must comply thereafter with all applicable provisions of this subpart starting on the applicable compliance date specified in paragraph (d) of this section. Nothing in this paragraph is intended to preclude a source from limiting its potential to emit through other appropriate mechanisms that may be available through the permitting authority.

(1) Facilities that store natural gas or facilities that transport and store natural gas shall determine major source status using the maximum annual facility natural gas throughput calculated according to paragraphs (a)(1)(i) through (a)(1)(iv) of this section.

(i) The owner or operator shall determine the number of hours to complete the storage cycle for the facility. The storage cycle is the number of hours for the injection cycle, calculated according to the equation in paragraph (a)(1)(i)(A) of this section, plus the number of hours for the withdrawal cycle, calculated according to the equation in paragraph (a)(1)(i)(B) of this section.

(A) The hours for the facility injection cycle are determined according to the following equation:

$$IC = \frac{WGC}{IR_{max}}$$

Where:

IC = Facility injection cycle in hours/cycle.

WGC = Working gas capacity in cubic meters. The working gas capacity is defined as the maximum storage capacity minus the FERC cushion (as defined in § 63.1271).

IR_{max} = Maximum facility injection rate in cubic meters per hour.

(B) The hours for the facility withdrawal cycle are determined according to the following equation:

$$WC = \frac{WGC}{WR_{max}}$$

Where:

WC = Facility withdrawal cycle, hours/cycle.

WGC = Working gas capacity, cubic meters. The working gas capacity is defined as the maximum storage capacity minus the FERC cushion (as defined in § 63.1271) and shall be the same value as used in paragraph (a)(1)(i)(A) of this section.

WR_{max} = Maximum facility withdrawal rate in cubic meters per hour.

(ii) The owner or operator shall calculate the number of storage cycles for the facility per year according to the following equation:

$$Cycle = \frac{8760\ hr/yr}{IC + WC}$$

Where:

Cycle = Number of storage cycles for the facility per year.

IC = Number of hours for a facility injection cycle, hours/cycle, as calculated in paragraph (a)(1)(i)(A) of this section.

WC = Number of hours for a facility withdrawal cycle, hours/cycle, as calculated in paragraph (a)(1)(i)(B) of this section.

(iii) The owner or operator shall calculate the facilitywide maximum annual glycol dehydration unit hours of operation based on the following equation:

Operation = Cycles × WC

Where:

Operation = Facilitywide maximum annual glycol dehydration unit hours of operation (hr/yr).

Cycles = Number of storage cycles for the facility per year, as calculated in paragraph (a)(1)(ii) of this section.

WC = Number of hours for a facility withdrawal cycle, hours/cycle, as calculated in paragraph (a)(1)(i)(B) of this section.

(iv) The owner or operator shall calculate the maximum facilitywide natural gas throughput based on the following equation:

Throughput = Operation × WR_{max}

Where:

Throughput = Maximum facilitywide natural gas throughput in cubic meters per year.

Operation = Maximum facilitywide annual glycol dehydration unit hours of operation in hours per year, as calculated in paragraph (a)(1)(iii) of this section.

WR_{max} = Maximum facility withdrawal rate in cubic meters per hour.

(2) Facilities that only transport natural gas shall calculate the maximum natural gas throughput as the highest annual natural gas throughput over the 5 years prior to June 17, 1999, multiplied by a factor of 1.2.

(3) The owner or operator shall maintain records of the annual facility natural gas throughput each year and upon request, submit such records to the Administrator. If the facility annual natural gas throughput increases above the maximum natural gas throughput calculated in paragraph (a)(1) or (a)(2) of this section, the maximum natural gas throughput must be recalculated using the higher throughput multiplied by a factor of 1.2.

(4) The owner or operator shall determine the maximum values for other parameters used to calculate potential emissions as the maximum over the same period for which maximum throughput is determined as specified in paragraph (a)(1) or (a)(2) of this section. These parameters shall be based on an annual average or the highest single measured value.

(b) The affected source is each glycol dehydration unit.

(c) The owner or operator of a facility that does not contain an affected source, as specified in paragraph (b) of this section, is not subject to the requirements of this subpart.

(d) The owner or operator of each affected source shall achieve compliance with the provisions of this subpart by the following dates:

(1) The owner or operator of an affected source, the construction or reconstruction of which commenced before February 6, 1998, shall achieve compliance with this provisions of the subpart no later than June 17, 2002 except as provided for in § 63.6(i). The owner or operator of an area source, the construction or reconstruction of which commenced before February 6, 1998, that increases its emissions of (or its potential to emit) HAP such that the source becomes a major source that is subject to this subpart shall comply with this subpart 3 years after becoming a major source.

(2) The owner or operator of an affected source, the construction or reconstruction of which commences on or after February 6, 1998, shall achieve compliance with the provisions of this subpart immediately upon initial startup or June 17, 1999, whichever date is later. Area sources, the construction or reconstruction of which commences on or after February 6, 1998, that become major sources shall comply with the provisions of this standard immediately upon becoming a major source.

(e) An owner or operator of an affected source that is a major source or is located at a major source and is subject to the provisions of this subpart is also subject to 40 CFR part 70 or part 71 permitting requirements.

(f) *Exemptions.* A facility with a facilitywide actual annual average natural gas throughput less than 28.3 thousand standard cubic meters per day, where glycol dehydration units are the only HAP emission source, is not subject to the requirements of this subpart. Records shall be maintained as required in § 63.10(b)(3).

§ 63.1271 Definitions.

All terms used in this subpart shall have the meaning given to them in the Clean Air Act, subpart A of this part (General Provisions), and in this section. If the same term is defined in subpart A and in this section, it shall have the meaning given in this section for purposes of this subpart.

Boiler means an enclosed device using controlled flame combustion and having the primary purpose of recovering and exporting thermal energy in the form of steam or hot water. Boiler also means any industrial furnace as defined in 40 CFR 260.10.

Closed-vent system means a system that is not open to the atmosphere and is composed of piping, ductwork, connections, and if necessary, flow inducing devices that transport gas or vapor from an emission point to one or more control devices. If gas or vapor from regulated equipment is routed to a process (e.g., to a fuel gas system), the conveyance system shall not be considered a closed-vent system and is not subject to closed-vent system standards.

Combustion device means an individual unit of equipment, such as a flare, incinerator, process heater, or boiler, used for the combustion of organic HAP emissions.

Compressor station means any permanent combination of compressors that move natural gas at increased pressure from fields, in transmission pipelines, or into storage.

Continuous recorder means a data recording device that either records an instantaneous data value at least once every hour or records hourly or more frequent block average values.

Control device means any equipment used for recovering or oxidizing HAP or volatile organic compounds (VOC) vapors. Such equipment includes, but is not limited to, absorbers, carbon adsorbers, condensers, incinerators, flares, boilers, and process heaters. For the purposes of this subpart, if gas or vapor from regulated equipment is used, reused (i.e., injected into the flame zone of a combustion device), returned back to the process, or sold, then the recovery system used, including piping, connections, and flow inducing devices, is not considered to be control devices or closed-vent systems.

Custody transfer means the transfer of hydrocarbon liquids or natural gas:

(1) After processing and/or treatment in the producing operations; or

(2) From storage vessels or automatic transfer facilities, or other equipment, including product loading racks, to pipelines or any other forms of transportation.

Facility means any grouping of equipment where natural gas is processed, compressed, or stored prior to entering a pipeline to a local distribution company or (if there is no local distribution company) to a final end user. Examples of a facility for this source category are: an underground natural gas storage operation; or a natural gas compressor station that receives natural gas via pipeline, from an underground natural gas storage operation, or from a natural gas processing plant. The emission points associated with these phases include, but are not limited to, process vents. Processes that may have vents include, but are not limited to, dehydration and compressor station engines.

Facility, for the purpose of a major source determination, means natural gas transmission and storage equipment that is located inside the boundaries of an individual surface site (as defined in this section) and is connected by ancillary equipment, such as gas flow lines or power lines. Equipment that is part of a facility will typically be located within close proximity to other equipment located at the same facility. Natural gas transmission and storage equipment or groupings of equipment located on different gas leases, mineral fee tracts, lease tracts, subsurface unit areas, surface fee tracts, or surface lease tracts shall not be considered part of the same facility.

Federal Energy Regulatory Commission Cushion or *FERC Cushion* means the minimum natural gas capacity of a storage field as determined by the Federal Energy Regulatory Commission.

Flame zone means the portion of the combustion chamber in a combustion device occupied by the flame envelope.

Flash tank. See the definition for gas-condensate-glycol (GCG) separator.

Flow indicator means a device which indicates whether gas flow is present in

a line or whether the valve position would allow gas flow to be present in a line.

Gas-condensate-glycol (GCG) separator means a two-or three-phase separator through which the "rich" glycol stream of a glycol dehydration unit is passed to remove entrained gas and hydrocarbon liquid. The GCG separator is commonly referred to as a flash separator or flash tank.

Glycol dehydration unit means a device in which a liquid glycol (including, but not limited to, ethylene glycol, diethylene glycol, or triethylene glycol) absorbent directly contacts a natural gas stream and absorbs water in a contact tower or absorption column (absorber). The glycol contacts and absorbs water vapor and other gas stream constituents from the natural gas and becomes "rich" glycol. This glycol is then regenerated in the glycol dehydration unit reboiler. The "lean" glycol is then recycled.

Glycol dehydration unit baseline operations means operations representative of the glycol dehydration unit operations as of June 17, 1999. For the purposes of this subpart, for determining the percentage of overall HAP emission reduction attributable to process modifications, glycol dehydration unit baseline operations shall be parameter values (including, but not limited to, glycol circulation rate or glycol-HAP absorbency) that represent actual long-term conditions (i.e., at least 1 year). Glycol dehydration units in operation for less than 1 year shall document that the parameter values represent expected long-term operating conditions had process modifications not been made.

Glycol dehydration unit process vent means either the glycol dehydration unit reboiler vent and the vent from the GCG separator (flash tank), if present.

Glycol dehydration unit reboiler vent means the vent through which exhaust from the reboiler of a glycol dehydration unit passes from the reboiler to the atmosphere or to a control device.

Hazardous air pollutants or *HAP* means the chemical compounds listed in section 112(b) of the Clean Air Act (Act). All chemical compounds listed in section 112(b) of the Act need to be considered when making a major source determination. Only the HAP compounds listed in Table 1 of this subpart need to be considered when determining compliance.

Incinerator means an enclosed combustion device that is used for destroying organic compounds. Auxiliary fuel may be used to heat waste gas to combustion temperatures. Any energy recovery section is not physically formed into one manufactured or assembled unit with the combustion section; rather, the energy recovery section is a separate section following the combustion section and the two are joined by ducts or connections carrying flue gas. The above energy recovery section limitation does not apply to an energy recovery section used solely to preheat the incoming vent stream or combustion air.

Initial startup means the first time a new or reconstructed source begins production. For the purposes of this subpart, initial startup does not include subsequent startups (as defined in this section) of equipment, for example, following malfunctions or shutdowns.

Major source, as used in this subpart, shall have the same meaning as in § 63.2, except that:

(1) Emissions from any pipeline compressor station or pump station shall not be aggregated with emissions from other similar units, whether or not such units are in a contiguous area or under common control; and

(2) Emissions from processes, operations, and equipment that are not part of the same facility, as defined in this section, shall not be aggregated.

Natural gas means a naturally occurring mixture of hydrocarbon and nonhydrocarbon gases found in geologic formations beneath the earth's surface. The principal hydrocarbon constituent is methane.

Natural gas transmission means the pipelines used for the long distance transport of natural gas (excluding processing). Specific equipment used in natural gas transmission includes the land, mains, valves, meters, boosters, regulators, storage vessels, dehydrators, compressors, and their driving units and appurtenances, and equipment used for transporting gas from a production plant, delivery point of purchased gas, gathering system, storage area, or other wholesale source of gas to one or more distribution area(s).

No detectable emissions means no escape of HAP from a device or system to the atmosphere as determined by:

(1) Instrument monitoring results in accordance with the requirements of § 63.1282(b); and

(2) The absence of visible openings or defects in the device or system, such as rips, tears, or gaps.

Operating parameter value means a minimum or maximum value established for a control device or process parameter which, if achieved by itself or in combination with one or more other operating parameter values, indicates that an owner or operator has complied with an applicable operating parameter limitation, over the appropriate averaging period as specified in § 63.1282 (e) and (f).

Operating permit means a permit required by 40 CFR part 70 or part 71.

Organic monitoring device means an instrument used to indicate the concentration level of organic compounds exiting a control device based on a detection principle such as infra-red, photoionization, or thermal conductivity.

Primary fuel means the fuel that provides the principal heat input (i.e., more than 50 percent) to the device. To be considered primary, the fuel must be able to sustain operation without the addition of other fuels.

Process heater means an enclosed device using a controlled flame, the primary purpose of which is to transfer heat to a process fluid or process material that is not a fluid, or to a heat transfer material for use in a process (rather than for steam generation).

Safety device means a device that meets both of the following conditions: the device is not used for planned or routine venting of liquids, gases, or fumes from the unit or equipment on which the device is installed; and the device remains in a closed, sealed position at all times except when an unplanned event requires that the device open for the purpose of preventing physical damage or permanent deformation of the unit or equipment on which the device is installed in accordance with good engineering and safety practices for handling flammable, combustible, explosive, or other hazardous materials. Examples of unplanned events which may require a safety device to open include failure of an essential equipment component or a sudden power outage.

Shutdown means for purposes including, but not limited to, periodic maintenance, replacement of equipment, or repair, the cessation of operation of a glycol dehydration unit, or other affected source under this subpart, or equipment required or used solely to comply with this subpart.

Startup means the setting into operation of a glycol dehydration unit, or other affected equipment under this subpart, or equipment required or used to comply with this subpart. Startup includes initial startup and operation solely for the purpose of testing equipment.

Storage vessel means a tank or other vessel that is designed to contain an accumulation of crude oil, condensate, intermediate hydrocarbon liquids, produced water, or other liquid, and is constructed primarily of non-earthen

materials (e.g., wood, concrete, steel, plastic) that provide structural support.

Surface site means any combination of one or more graded pad sites, gravel pad sites, foundations, platforms, or the immediate physical location upon which equipment is physically affixed.

Temperature monitoring device means an instrument used to monitor temperature and having a minimum accuracy of ±2 percent of the temperature being monitored expressed in °C, or ±2.5 °C, whichever is greater. The temperature monitoring device may measure temperature in degrees Fahrenheit or degrees Celsius, or both.

Total organic compounds or *TOC*, as used in this subpart, means those compounds which can be measured according to the procedures of Method 18, 40 CFR part 60, appendix A.

Underground storage means the subsurface facilities utilized for storing natural gas that has been transferred from its original location for the primary purpose of load balancing, which is the process of equalizing the receipt and delivery of natural gas. Processes and operations that may be located at an underground storage facility include, but are not limited to, compression and dehydration.

§ 63.1272 Startups, shutdowns, and malfunctions.

(a) The provisions set forth in this subpart shall apply at all times except during startups or shutdowns, during malfunctions, and during periods of non-operation of the affected sources (or specific portion thereof) resulting in cessation of the emissions to which this subpart applies. However, during the startup, shutdown, malfunction, or period of non-operation of one portion of an affected source, all emission points which can comply with the specific provisions to which they are subject must do so during the startup, shutdown, malfunction, or period of non-operation.

(b) The owner or operator shall not shut down items of equipment that are required or utilized for compliance with the provisions of this subpart during times when emissions are being routed to such items of equipment, if the shutdown would contravene requirements of this subpart applicable to such items of equipment. This paragraph does not apply if the item of equipment is malfunctioning, or if the owner or operator must shut down the equipment to avoid damage due to a contemporaneous startup, shutdown, or malfunction of the affected source or a portion thereof.

(c) During startups, shutdowns, and malfunctions when the requirements of this subpart do not apply pursuant to paragraphs (a) and (b) of this section, the owner or operator shall implement, to the extent reasonably available, measures to prevent or minimize excess emissions to the maximum extent practical. For purposes of this paragraph, the term "excess emissions" means emissions in excess of those that would have occurred if there were no startup, shutdown, or malfunction, and the owner or operator complied with the relevant provisions of this subpart. The measures to be taken shall be identified in the applicable startup, shutdown, and malfunction plan, and may include, but are not limited to, air pollution control technologies, recovery technologies, work practices, pollution prevention, monitoring, and/or changes in the manner of operation of the source. Back-up control devices are not required, but may be used if available.

(d) The owner or operator shall prepare a startup, shutdown, or malfunction plan as required in § 63.6(e)(3) except that the plan is not required to be incorporated by reference into the source's title V permit as specified in § 63.6(e)(3)(i). Instead, the owner or operator shall keep the plan on record as required by § 63.6(e)(3)(v). The failure of the plan to adequately minimize emissions during the startup, shutdown, or malfunction does not shield an owner or operator from enforcement actions.

§ 63.1273 [Reserved]

§ 63.1274 General standards.

(a) Table 2 of this subpart specifies the provisions of subpart A (General Provisions) that apply and those that do not apply to owners and operators of affected sources subject to this subpart.

(b) All reports required under this subpart shall be sent to the Administrator at the appropriate address listed in § 63.13. Reports may be submitted on electronic media.

(c) Except as specified in paragraph (d) of this section, the owner or operator of an affected source (i.e., glycol dehydration unit) located at an existing or new major source of HAP emissions shall comply with the requirements in this subpart as follows:

(1) The control requirements for glycol dehydration unit process vents specified in § 63.1275;

(2) The monitoring requirements specified in § 63.1283, and

(3) The recordkeeping and reporting requirements specified in §§ 63.1284 and 63.1285.

(d) *Exemptions.* The owner or operator is exempt from the requirements of paragraph (c) of this section if the criteria listed in paragraph (d)(1) or (d)(2) of this section are met. Records of the determination of these criteria must be maintained as required in § 63.1284(d) of this subpart.

(1) The actual annual average flow of gas to the glycol dehydration unit is less than 283 thousand standard cubic meters per day, as determined by the procedures specified in § 63.1282(a)(1) of this subpart; or

(2) The actual average emissions of benzene from the glycol dehydration unit process vents to the atmosphere are less than 0.90 megagram per year as determined by the procedures specified in § 63.1282(a)(2) of this subpart.

(e) Each owner or operator of a major HAP source subject to this subpart is required to apply for a part 70 or part 71 operating permit from the appropriate permitting authority. If the Administrator has approved a State operating permit program under part 70, the permit shall be obtained from the State authority. If a State operating permit program has not been approved, the owner or operator shall apply to the EPA Regional Office pursuant to part 71.

(f) [Reserved]

(g) In all cases where the provisions of this subpart require an owner or operator to repair leaks by a specified time after the leak is detected, it is a violation of this standard to fail to take action to repair the leak(s) within the specified time. If action is taken to repair the leak(s) within the specified time, failure of that action to successfully repair the leak(s) is not a violation of this standard. However, if the repairs are unsuccessful, a leak is detected and the owner or operator shall take further action as required by the applicable provisions of this subpart.

§ 63.1275 Glycol dehydration unit process vent standards.

(a) This section applies to each glycol dehydration unit, subject to this subpart, with an actual annual average natural gas flowrate equal to or greater than 283 thousand standard cubic meters per day and with actual average benzene glycol dehydration unit process vent emissions equal to or greater than 0.90 megagrams per year.

(b) Except as provided in paragraph (c) of this section, an owner or operator of a glycol dehydration unit process vent shall comply with the requirements specified in paragraphs (b)(1) and (b)(2) of this section.

(1) For each glycol dehydration unit process vent, the owner or operator shall control air emissions by either paragraph (b)(1)(i) or (b)(1)(ii) of this section.

(i) The owner or operator shall connect the process vent to a control device or a combination of control devices through a closed-vent system. The closed-vent system shall be designed and operated in accordance with the requirements of § 63.1281(c). The control device(s) shall be designed and operated in accordance with the requirements of § 63.1281(d).

(ii) The owner or operator shall connect the process vent to a control device or a combination of control devices through a closed-vent system and the outlet benzene emissions from the control device(s) shall be less than 0.90 megagrams per year. The closed-vent system shall be designed and operated in accordance with the requirements of § 63.1281(c). The control device(s) shall be designed and operated in accordance with the requirements of § 63.1281(d), except that the performance requirements specified in § 63.1281(d)(1)(i) and (ii) do not apply.

(2) One or more safety devices that vent directly to the atmosphere may be used on the air emission control equipment installed to comply with paragraph (b)(1) of this section.

(c) As an alternative to the requirements of paragraph (b) of this section, the owner or operator may comply with one of the following:

(1) The owner or operator shall control air emissions by connecting the process vent to a process natural gas line.

(2) The owner or operator shall demonstrate, to the Administrator's satisfaction, that the total HAP emissions to the atmosphere from the glycol dehydration unit process vent are reduced by 95.0 percent through process modifications or a combination of process modifications and one or more control devices, in accordance with the requirements specified in § 63.1281(e).

(3) Control of HAP emissions from a GCG separator (flash tank) vent is not required if the owner or operator demonstrates, to the Administrator's satisfaction, that total emissions to the atmosphere from the glycol dehydration unit process vent are reduced by one of the levels specified in paragraphs (c)(3)(i) through (c)(3)(ii), through the installation and operation of controls as specified in paragraph (b) (1) of this section.

(i) HAP emissions are reduced by 95.0 percent or more.

(ii) Benzene emissions are reduced to a level less than 0.90 megagrams per year.

§ 63.1276–§ 63.1280 [Reserved]

§ 63.1281 Control equipment requirements.

(a) This section applies to each closed-vent system and control device installed and operated by the owner or operator to control air emissions as required by the provisions of this subpart. Compliance with paragraphs (c) and (d) of this section will be determined by review of the records required by § 63.1284, the reports required by § 63.1285, by review of performance test results, and by inspections.

(b) [Reserved]

(c) *Closed-vent system requirements.* (1) The closed-vent system shall route all gases, vapors, and fumes emitted from the material in a HAP emissions unit to a control device that meets the requirements specified in paragraph (d) of this section.

(2) The closed-vent system shall be designed and operated with no detectable emissions.

(3) If the closed-vent system contains one or more bypass devices that could be used to divert all or a portion of the gases, vapors, or fumes from entering the control device, the owner or operator shall meet the requirements specified in paragraphs (c)(3)(i) and (c)(3)(ii) of this section.

(i) For each bypass device, except as provided for in paragraph (c)(3)(ii) of this section, the owner or operator shall either:

(A) Properly install, calibrate, maintain, and operate a flow indicator at the inlet to the bypass device that could divert the stream away from the control device to the atmosphere that takes a reading at least once every 15 minutes, and that sounds an alarm when the bypass device is open such that the stream is being, or could be, diverted away from the control device to the atmosphere; or

(B) Secure the bypass device valve installed at the inlet to the bypass device in the non-diverting position using a car-seal or a lock-and-key type configuration. The owner or operator shall visually inspect the seal or closure mechanism at least once every month to verify that the valve is maintained in the non-diverting position and the vent stream is not diverted through the bypass device.

(ii) Low leg drains, high point bleeds, analyzer vents, open-ended valves or lines, and safety devices are not subject to the requirements of paragraph (c)(3)(i) of this section.

(d) *Control device requirements.* (1) The control device used to reduce HAP emissions in accordance with the standards of this subpart shall be one of the control devices specified in paragraphs (d)(1)(i) through (iii) of this section.

(i) An enclosed combustion device (e.g., thermal vapor incinerator, catalytic vapor incinerator, boiler, or process heater) that is designed and operated in accordance with one of the following performance requirements:

(A) Reduces the mass content of either TOC or total HAP in the gases vented to the device by 95.0 percent by weight or greater, as determined in accordance with the requirements of § 63.1282(d);

(B) Reduces the concentration of either TOC or total HAP in the exhaust gases at the outlet to the device to a level equal to or less than 20 parts per million by volume on a dry basis corrected to 3 percent oxygen as determined in accordance with the requirements of § 63.1282(d); or

(C) Operates at a minimum residence time of 0.5 second at a minimum temperature of 760 °C.

(D) If a boiler or process heater is used as the control device, then the vent stream shall be introduced into the flame zone of the boiler or process heater.

(ii) A vapor recovery device (e.g., carbon adsorption system or condenser) or other control device that is designed and operated to reduce the mass content of either TOC or total HAP in the gases vented to the device by 95.0 percent by weight or greater as determined in accordance with the requirements of § 63.1282(d).

(iii) A flare that is designed and operated in accordance with the requirements of § 63.11(b).

(2) [Reserved]

(3) The owner or operator shall demonstrate that a control device achieves the performance requirements of paragraph (d)(1) of this section by following the procedures specified in § 63.1282(d).

(4) The owner or operator shall operate each control device in accordance with the requirements specified in paragraphs (d)(4)(i) and (ii) of this section.

(i) Each control device used to comply with this subpart shall be operating at all times when gases, vapors, and fumes are vented from the emissions unit or units through the closed-vent system to the control device, as required under § 63.1275, except when maintenance or repair of a unit cannot be completed without a shutdown of the control device. An owner or operator may vent more than one unit to a control device used to comply with this subpart.

(ii) For each control device monitored in accordance with the requirements of

§ 63.1283(d), the owner or operator shall demonstrate compliance according to the requirements of § 63.1282(e), or (f) as applicable.

(5) For each carbon adsorption system used as a control device to meet the requirements of paragraph (d)(1) of this section, the owner or operator shall manage the carbon as follows:

(i) Following the initial startup of the control device, all carbon in the control device shall be replaced with fresh carbon on a regular, predetermined time interval that is no longer than the carbon service life established for the carbon adsorption system.

(ii) The spent carbon removed from the carbon adsorption system shall be either regenerated, reactivated, or burned in one of the units specified in paragraphs (d)(5)(ii)(A) through (d)(5)(ii)(G) of this section.

(A) Regenerated or reactivated in a thermal treatment unit for which the owner or operator has been issued a final permit under 40 CFR part 270 that implements the requirements of 40 CFR part 264, subpart X.

(B) Regenerated or reactivated in a thermal treatment unit equipped with and operating organic air emission controls in accordance with this section.

(C) Regenerated or reactivated in a thermal treatment unit equipped with and operating organic air emission controls in accordance with a national emissions standard for HAP under another subpart in 40 CFR part 61 or this part.

(D) Burned in a hazardous waste incinerator for which the owner or operator has been issued a final permit under 40 CFR part 270 that implements the requirements of 40 CFR part 264, subpart O.

(E) Burned in a hazardous waste incinerator which the owner or operator has designed and operates in accordance with the requirements of 40 CFR part 265, subpart O.

(F) Burned in a boiler or industrial furnace for which the owner or operator has been issued a final permit under 40 CFR part 270 that implements the requirements of 40 CFR part 266, subpart H.

(G) Burned in a boiler or industrial furnace which the owner or operator has designed and operates in accordance with the interim status requirements of 40 CFR part 266, subpart H.

(e) *Process modification requirements.* Each owner or operator that chooses to comply with § 63.1275(c)(2) shall meet the requirements specified in paragraphs (e)(1) through (e)(3) of this section.

(1) The owner or operator shall determine glycol dehydration unit baseline operations (as defined in § 63.1271). Records of glycol dehydration unit baseline operations shall be retained as required under § 63.1284(b)(9).

(2) The owner or operator shall document, to the Administrator's satisfaction, the conditions for which glycol dehydration unit baseline operations shall be modified to achieve the 95.0 percent overall HAP emission reduction, either through process modifications or through a combination of process modifications and one or more control devices. If a combination of process modifications and one or more control devices are used, the owner or operator shall also establish the percent HAP reduction to be achieved by the control device to achieve an overall HAP emission reduction of 95.0 percent for the glycol dehydration unit process vent. Only modifications in glycol dehydration unit operations directly related to process changes, including, but not limited to, changes in glycol circulation rate or glycol-HAP absorbency, shall be allowed. Changes in the inlet gas characteristics or natural gas throughput rate shall not be considered in determining the overall HAP emission reduction.

(3) The owner or operator that achieves a 95.0 percent HAP emission reduction using process modifications alone shall comply with paragraph (e)(3)(i) of this section. The owner or operator that achieves a 95.0 percent HAP emission reduction using a combination of process modifications and one or more control devices shall comply with paragraphs (e)(3)(i) and (e)(3)(ii) of this section.

(i) The owner or operator shall maintain records, as required in § 63.1284(b)(10), that the facility continues to operate in accordance with the conditions specified under paragraph (e)(2) of this section.

(ii) The owner or operator shall comply with the control device requirements specified in paragraph (d) of this section, except that the emission reduction achieved shall be the emission reduction specified in paragraph (e)(2) of this section.

§ 63.1282 Test methods, compliance procedures, and compliance demonstrations.

(a) *Determination of glycol dehydration unit flowrate or benzene emissions.* The procedures of this paragraph shall be used by an owner or operator to determine glycol dehydration unit natural gas flowrate or benzene emissions to meet the criteria for the exemption from control requirements under § 63.1274(d).

(1) The determination of actual flowrate of natural gas to a glycol dehydration unit shall be made using the procedures of either paragraph (a)(1)(i) or (a)(1)(ii) of this section.

(i) The owner or operator shall install and operate a monitoring instrument that directly measures natural gas flowrate to the glycol dehydration unit with an accuracy of plus or minus 2 percent or better. The owner or operator shall convert the annual natural gas flowrate to a daily average by dividing the annual flowrate by the number of days per year the glycol dehydration unit processed natural gas.

(ii) The owner or operator shall document, to the Administrator's satisfaction, that the actual annual average natural gas flowrate to the glycol dehydration unit is less than 85 thousand standard cubic meters per day.

(2) The determination of actual average benzene emissions from a glycol dehydration unit shall be made using the procedures of either paragraph (a)(2)(i) or (a)(2)(ii) of this section. Emissions shall be determined either uncontrolled or with federally enforceable controls in place.

(i) The owner or operator shall determine actual average benzene emissions using the model GRI-GLYCalc™, Version 3.0 or higher, and the procedures presented in the associated GRI-GLYCalc™ Technical Reference Manual. Inputs to the model shall be representative of actual operating conditions of the glycol dehydration unit and may be determined using the procedures documented in the Gas Research Institute (GRI) report entitled "Atmospheric Rich/Lean Method for Determining Glycol Dehydrator Emissions" (GRI-95/0368.1); or

(ii) The owner or operator shall determine an average mass rate of benzene emissions in kilograms per hour through direct measurement by performing three runs of Method 18 in 40 CFR part 60, appendix A (or an equivalent method), and averaging the results of the three runs. Annual emissions in kilograms per year shall be determined by multiplying the mass rate by the number of hours the unit is operated per year. This result shall be converted to megagrams per year.

(b) *No detectable emissions test procedure.* (1) The procedure shall be conducted in accordance with Method 21, 40 CFR part 60, appendix A.

(2) The detection instrument shall meet the performance criteria of Method 21, 40 CFR part 60, appendix A, except the instrument response factor criteria

in section 3.1.2(a) of Method 21 shall be for the average composition of the fluid, and not for each individual organic compound in the stream.

(3) The detection instrument shall be calibrated before use on each day of its use by the procedures specified in Method 21, 40 CFR part 60, appendix A.

(4) Calibration gases shall be as follows:

(i) Zero air (less than 10 parts per million by volume hydrocarbon in air); and

(ii) A mixture of methane in air at a methane concentration of less than 10,000 parts per million by volume.

(5) An owner or operator may choose to adjust or not adjust the detection instrument readings to account for the background organic concentration level. If an owner or operator chooses to adjust the instrument readings for the background level, the background level value must be determined according to the procedures in Method 21 of 40 CFR part 60, appendix A.

(6)(i) Except as provided in paragraph (b)(6)(i) of this section, the detection instrument shall meet the performance criteria of Method 21 of 40 CFR part 60, appendix A, except the instrument response factor criteria in section 3.1.2(a) of Method 21 shall be for the average composition of the process fluid not each individual volatile organic compound in the stream. For process streams that contain nitrogen, air, or other inerts which are not organic hazardous air pollutants or volatile organic compounds, the average stream response factor shall be calculated on an inert-free basis.

(ii) If no instrument is available at the facility that will meet the performance criteria specified in paragraph (b)(6)(i) of this section, the instrument readings may be adjusted by multiplying by the average response factor of the process fluid, calculated on an inert-free basis as described in paragraph (b)(6)(i) of this section.

(7) An owner or operator must determine if a potential leak interface operates with no detectable emissions using the applicable procedure specified in paragraph (b)(7)(i) or (b)(7)(ii) of this section.

(i) If an owner or operator chooses not to adjust the detection instrument readings for the background organic concentration level, then the maximum organic concentration value measured by the detection instrument is compared directly to the applicable value for the potential leak interface as specified in paragraph (b)(8) of this section.

(ii) If an owner or operator chooses to adjust the detection instrument readings for the background organic concentration level, the value of the arithmetic difference between the maximum organic concentration value measured by the instrument and the background organic concentration value as determined in paragraph (b)(5) of this section is compared with the applicable value for the potential leak interface as specified in paragraph (b)(8) of this section.

(8) A potential leak interface is determined to operate with no detectable organic emissions if the organic concentration value determined in paragraph (b)(7) is less than 500 parts per million by volume.

(c) [Reserved]

(d) *Control device performance test procedures.* This paragraph applies to the performance testing of control devices. The owners or operators shall demonstrate that a control device achieves the performance requirements of § 63.1281(d)(1) or (e)(3)(ii) using either a performance test as specified in paragraph (d)(3) of this section or a design analysis as specified in paragraph (d)(4) of this section. The owner or operator may elect to use the alternative procedures in paragraph (d)(5) of this section for performance testing of a condenser used to control emissions from a glycol dehydration unit process vent.

(1) The following control devices are exempt from the requirements to conduct performance tests and design analyses under this section:

(i) A flare that is designed and operated in accordance with § 63.11(b);

(ii) A boiler or process heater with a design heat input capacity of 44 megawatts or greater;

(iii) A boiler or process heater into which the vent stream is introduced with the primary fuel or is used as the primary fuel;

(iv) A boiler or process heater burning hazardous waste for which the owner or operator has either been issued a final permit under 40 CFR part 270 and complies with the requirements of 40 CFR part 266, subpart H, or has certified compliance with the interim status requirements of 40 CFR part 266, subpart H;

(v) A hazardous waste incinerator for which the owner or operator has been issued a final permit under 40 CFR part 270 and complies with the requirements of 40 CFR part 264, subpart O, or has certified compliance with the interim status requirements of 40 CFR part 265, subpart O.

(vi) A control device for which a performance test was conducted for determining compliance with a regulation promulgated by the EPA, and the test was conducted using the same methods specified in this section, and either no process changes have been made since the test, or the owner or operator can demonstrate that the results of the performance test, with or without adjustments, reliably demonstrate compliance despite process changes.

(2) An owner or operator shall design and operate each flare in accordance with the requirements specified in § 63.11(b) and in paragraphs (d)(2)(i) and (d)(2)(ii) of this section.

(i) The compliance determination shall be conducted using Method 22 of 40 CFR part 60, appendix A, to determine visible emissions.

(ii) An owner or operator is not required to conduct a performance test to determine percent emission reduction or outlet organic HAP or TOC concentration when a flare is used.

(3) For a performance test conducted to demonstrate that a control device meets the requirements of § 63.1281(d)(1) or (e)(3)(ii), the owner or operator shall use the test methods and procedures specified in paragraphs (d)(3)(i) through (d)(3)(iv) of this section. The performance test shall be conducted according to the schedule specified in § 63.7(a)(2), and the results of the performance test shall be submitted in the Notification of Compliance Status Report as required in § 63.1285(d)(1)(ii).

(i) Method 1 or 1A, 40 CFR part 60, appendix A, as appropriate, shall be used for selection of the sampling sites specified in paragraphs (d)(3)(i)(A) and (B) of this section. Any references to particulate mentioned in Methods 1 and 1A do not apply to this section.

(A) To determine compliance with the control device percent reduction requirements specified in § 63.1281(d)(1)(i)(A),(d)(1)(ii), or (e)(3)(ii), sampling sites shall be located at the inlet of the first control device and at the outlet of the final control device.

(B) To determine compliance with the enclosed combustion device total HAP concentration limit specified in § 63.1281(d)(1)(i)(B), the sampling site shall be located at the outlet of the device.

(ii) The gas volumetric flowrate shall be determined using Method 2, 2A, 2C, or 2D, 40 CFR part 60, appendix A, as appropriate.

(iii) To determine compliance with the control device percent reduction performance requirement in § 63.1281(d)(1)(i)(A), 63.1281(d)(1)(ii), or 63.1281(e)(3)(ii), the owner or operator shall use either Method 18, 40 CFR part 60, appendix A, or Method 25A, 40 CFR part 60, appendix A;

alternatively, any other method or data that have been validated according to the applicable procedures in Method 301 of appendix A of this part may be used. The following procedures shall be used to calculate the percentage of reduction:

(A) The minimum sampling time for each run shall be 1 hour in which either an integrated sample or a minimum of four grab samples shall be taken. If grab sampling is used, then the samples shall be taken at approximately equal intervals in time, such as 15-minute intervals during the run.

(B) The mass rate of either TOC (minus methane and ethane) or total HAP (E_i, E_o) shall be computed.

(*1*) The following equations shall be used:

$$E_i = K_2\left(\sum_{j=1}^{n} C_{ij}M_{ij}\right)Q_i$$

$$E_o = K_2\left(\sum_{j=1}^{n} C_{oj}M_{oj}\right)Q_o$$

Where:

C_{ij}, C_{oj} = Concentration of sample component j of the gas stream at the inlet and outlet of the control device, respectively, dry basis, parts per million by volume.

E_i, E_o = Mass rate of TOC (minus methane and ethane) or total HAP at the inlet and outlet of the control device, respectively, dry basis, kilogram per hour.

M_{ij}, M_{oj} = Molecular weight of sample component j of the gas stream at the inlet and outlet of the control device, respectively, gram/gram-mole.

Q_i, Q_o = Flowrate of gas stream at the inlet and outlet of the control device, respectively, dry standard cubic meter per minute.

K_2 = Constant, 2.494×10^{-6} (parts per million)$^{-1}$ (gram-mole per standard cubic meter) (kilogram/gram) (minute/hour), where standard temperature is 20°C.

(*2*) When the TOC mass rate is calculated, all organic compounds (minus methane and ethane) measured by Method 18, of 40 CFR part 60, appendix A; or Method 25A, 40 CFR part 60, appendix A, shall be summed using the equations in paragraph (d)(3)(iii)(B)(*1*) of this section.

(*3*) When the total HAP mass rate is calculated, only HAP chemicals listed in Table 1 of this subpart shall be summed using the equations in paragraph (d)(3)(iii)(B)(*1*) of this section.

(C) The percentage of reduction in TOC (minus methane and ethane) or total HAP shall be calculated as follows:

$$R_{cd} = \frac{E_i - E_o}{E_i} \times 100\%$$

Where:

R_{cd} = Control efficiency of control device, percent.

E_i = Mass rate of TOC (minus methane and ethane) or total HAP at the inlet to the control device as calculated under paragraph (d)(3)(iii)(B) of this section, kilograms TOC per hour or kilograms HAP per hour.

E_o = Mass rate of TOC (minus methane and ethane) or total HAP at the outlet of the control device, as calculated under paragraph (d)(3)(iii)(B) of this section, kilograms TOC per hour or kilograms HAP per hour.

(D) If the vent stream entering a boiler or process heater with a design capacity less than 44 megawatts is introduced with the combustion air or as a secondary fuel, the weight-percentage of reduction of total HAP or TOC (minus methane and ethane) across the device shall be determined by comparing the TOC (minus methane and ethane) or total HAP in all combusted vent streams and primary and secondary fuels with the TOC (minus methane and ethane) or total HAP exiting the device, respectively.

(iv) To determine compliance with the enclosed combustion device total HAP concentration limit specified in § 63.1281(d)(1)(i)(B), the owner or operator shall use either Method 18, 40 CFR part 60, appendix A; or Method 25A, 40 CFR part 60, appendix A, to measure either TOC (minus methane and ethane) or total HAP. Alternatively, any other method or data that have been validated according to Method 301 of appendix A of this part, may be used. The following procedures shall be used to calculate parts per million by volume concentration, corrected to 3 percent oxygen:

(A) The minimum sampling time for each run shall be 1 hour in which either an integrated sample or a minimum of four grab samples shall be taken. If grab sampling is used, then the samples shall be taken at approximately equal intervals in time, such as 15-minute intervals during the run.

(B) The TOC concentration or total HAP concentration shall be calculated according to paragraph (d)(3)(iv)(B)(*1*) or (d)(3)(iv)(B)(*2*) of this section.

(*1*) The TOC concentration (C_{TOC}) is the sum of the concentrations of the individual components and shall be computed for each run using the following equation:

$$C_{TOC} = \sum_{i=1}^{x} \frac{\left(\sum_{j=1}^{n} C_{ji}\right)}{x}$$

Where:

C_{TOC} = Concentration of total organic compounds minus methane and ethane, dry basis, parts per million by volume.

C_{ji} = Concentration of sample components j of sample i, dry basis, parts per million by volume.

n = Number of components in the sample.

x = Number of samples in the sample run.

(*2*) The total HAP concentration (C_{HAP}) shall be computed according to the equation in paragraph (d)(3)(iv)(B)(*1*) of this section, except that only HAP chemicals listed in Table 1 of this subpart shall be summed.

(C) The TOC concentration or total HAP concentration shall be corrected to 3 percent oxygen as follows:

(*1*) The emission rate correction factor for excess air, integrated sampling and analysis procedures of Method 3B, 40 CFR part 60, appendix A, shall be used to determine the oxygen concentration ($\%O_{2d}$). The samples shall be taken during the same time that the samples are taken for determining TOC concentration or total HAP concentration.

(*2*) The concentration corrected to 3 percent oxygen (C_c) shall be computed using the following equation:

$$C_c = C_m\left(\frac{17.9}{20.9 - \%O_{2d}}\right)$$

Where:

C_c = TOC concentration of total HAP concentration corrected to 3 percent oxygen, dry basis, parts per million by volume.

C_m = TOC concentration or total HAP concentration, dry basis, parts per million by volume.

$\%O_{2d}$ = Concentration of oxygen, dry basis, percent by volume.

(4) For a design analysis conducted to meet the requirements of § 63.1281(d)(1) or (e)(3)(ii), the owner or operator shall meet the requirements specified in paragraphs (d)(4)(i) and (d)(4)(ii) of this section. Documentation of the design analysis shall be submitted as a part of the Notification of Compliance Status Report as required in § 63.1285(d)(1)(i).

(i) The design analysis shall include analysis of the vent stream characteristics and control device

operating parameters for the applicable control device as specified in paragraphs (d)(4)(i) (A) through (F) of this section.

(A) For a thermal vapor incinerator, the design analysis shall include the vent stream composition, constituent concentrations, and flowrate and shall establish the design minimum and average temperatures in the combustion zone and the combustion zone residence time.

(B) For a catalytic vapor incinerator, the design analysis shall include the vent stream composition, constituent concentrations, and flowrate and shall establish the design minimum and average temperatures across the catalyst bed inlet and outlet, and the design service life of the catalyst.

(C) For a boiler or process heater, the design analysis shall include the vent stream composition, constituent concentrations, and flowrate; shall establish the design minimum and average flame zone temperatures and combustion zone residence time; and shall describe the method and location where the vent stream is introduced into the flame zone.

(D) For a condenser, the design analysis shall include the vent stream composition, constituent concentrations, flowrate, relative humidity, and temperature, and shall establish the design outlet organic compound concentration level, design average temperature of the condenser exhaust vent stream, and the design average temperatures of the coolant fluid at the condenser inlet and outlet. As an alternative to the design analysis, an owner or operator may elect to use the procedures specified in paragraph (d)(5) of this section.

(E) For a regenerable carbon adsorption, the design analysis shall include the vent stream composition, constituent concentrations, flowrate, relative humidity, and temperature, and shall establish the design exhaust vent stream organic compound concentration level, adsorption cycle time, number and capacity of carbon beds, type and working capacity of activated carbon used for the carbon beds, design total regeneration stream flow over the period of each complete carbon bed regeneration cycle, design carbon bed temperature after regeneration, design carbon bed regeneration time, and design service life of the carbon.

(F) For a nonregenerable carbon adsorption system, such as a carbon canister, the design analysis shall include the vent stream composition, constituent concentrations, flowrate, relative humidity, and temperature, and shall establish the design exhaust vent stream organic compound concentration level, capacity of the carbon bed, type and working capacity of activated carbon used for the carbon bed, and design carbon replacement interval based on the total carbon working capacity of the control device and source operating schedule. In addition, these systems will incorporate dual carbon canisters in case of emission breakthrough occurring in one canister.

(ii) If the owner or operator and the Administrator do not agree on a demonstration of control device performance using a design analysis, then the disagreement shall be resolved using the results of a performance test performed by the owner or operator in accordance with the requirements of paragraph (d)(3) of this section. The Administrator may choose to have an authorized representative observe the performance test.

(5) As an alternative to the procedures in paragraphs (d)(3) and (d)(4)(i)(D) of this section, an owner or operator may elect to use the procedures documented in the GRI report entitled, "Atmospheric Rich/Lean Method for Determining Glycol Dehydrator Emissions," (GRI-95/0368.1) as inputs for the model GRI-GLYCalc™, Version 3.0 or higher, to determine condenser performance.

(e) *Compliance demonstration for control devices performance requirements.* This paragraph applies to the demonstration of compliance with the control device performance requirements specified in § 63.1281(d)(1) and (e)(3)(ii). Compliance shall be demonstrated using the requirements in paragraphs (e)(1) through (e)(3) of this section. As an alternative, an owner or operator that installs a condenser as the control device to achieve the requirements specified in § 63.1281(d)(2)(ii) or § 63.1275(c)(2), may demonstrate compliance according to paragraph (f) of this section. An owner or operator may switch between compliance with paragraph (e) of this section and compliance with paragraph (f) of this section only after at least 1 year of operation in compliance with the selected approach. Notification of such a change in the compliance method shall be reported in the next Periodic Report, as required in § 63.1285(e), following the change.

(1) The owner or operator shall establish a site specific maximum or minimum monitoring parameter value (as appropriate) according to the requirements of § 63.1283(d)(5)(i).

(2) The owner or operator shall calculate the daily average of the applicable monitored parameter in accordance with § 63.1283(d)(4).

(3) Compliance is achieved when the daily average of the monitoring parameter value calculated under paragraph (e)(2) of this section is either equal to or greater than the minimum or equal to or less than the maximum monitoring value established under paragraph (e)(1) of this section.

(f) *Compliance demonstration with percent reduction performance requirements—condensers.* This paragraph applies to the demonstration of compliance with the performance requirements specified in § 63.1281(d)(1)(ii) for condensers. Compliance shall be demonstrated using the procedures in paragraphs (f)(1) through (f)(3) of this section.

(1) The owner or operator shall establish a site-specific condenser performance curve according to the procedures specified in § 63.1283(d)(5)(ii).

(2) Compliance with the percent reduction requirement in § 63.1281(d)(1)(ii) or § 63.1275(c)(2) shall be demonstrated by the procedures in paragraphs (f)(2)(i) through (f)(2)(iii) of this section.

(i) The owner or operator must calculate the daily average condenser outlet temperature in accordance with § 63.1283(d)(4).

(ii) The owner or operator shall determine the condenser efficiency for the current operating day using the daily average condenser outlet temperature calculated in paragraph (f)(2)(i) of this section and the condenser performance curve established in paragraph (f)(1) of this section.

(iii) Except as provided in paragraphs (f)(2)(iii) (A), (B), and (D) of this section, at the end of each operating day the owner or operator shall calculate the 30-day average HAP emission reduction from the condenser efficiencies determined in paragraph (f)(2)(ii) of this section for the preceding 30 operating days. If the owner or operator uses a combination of process modifications and a condenser in accordance with the requirements of § 63.1275(c)(2), the 30-day average HAP emission reduction shall be calculated using the emission reduction achieved through process modifications and the condenser efficiency determined in paragraph (f)(2)(ii) of this section, both for the preceding 30 operating days.

(A) After the compliance date specified in § 63.1270(f), an owner or operator of a facility that stores natural gas that has less than 30 days of data for determining the average HAP emission reduction, shall calculate the cumulative average at the end of the withdrawal season, each season, until 30 days of condenser operating data are

accumulated. For a facility that does not store natural gas, the owner or operator that has less than 30 days of data for determining average HAP emission reduction, shall calculate the cumulative average at the end of the calendar year, each year, until 30 days of condenser operating data are accumulated.

(B) After the compliance date specified in § 63.1270(f), an owner or operator that has less than 30 days of data for determining the average HAP emission reduction, compliance is achieved if the average HAP emission reduction calculated in paragraph (f)(2)(iii)(A) of this section, is equal to or greater than 95.0 percent.

(C) For the purposes of this subpart, a withdrawal season begins the first time gas is withdrawn from the storage field after July 1 of the calendar year and ends on June 30 of the next calendar year.

(D) Glycol dehydration units that are operated continuously have the option of complying with the requirements specified in 40 CFR 63.772(g).

(3) Compliance is achieved with the emission limitation specified in § 63.1281(d)(1)(ii) or § 63.1275(c)(2) if the average HAP emission reduction calculated in paragraph (f)(2)(iii) of this section is equal to or greater than 95.0 percent.

§ 63.1283 Inspection and monitoring requirements.

(a) This section applies to an owner or operator using air emission controls in accordance with the requirements of § 63.1275.

(b) [Reserved]

(c) *Closed-vent system inspection and monitoring requirements.* (1) For each closed-vent system required to comply with this section, the owner or operator shall comply with the requirements of paragraphs (c)(2) through (7) of this section.

(2) Except as provided in paragraphs (c) (5) and (6) of this section, each closed-vent system shall be inspected according to the procedures and schedule specified in paragraphs (c)(2) (i) and (ii) of this section.

(i) For each closed-vent system joints, seams, or other connections that are permanently or semi-permanently sealed (e.g., a welded joint between two sections of hard piping or a bolted or gasketed ducting flange), the owner or operator shall:

(A) Conduct an initial inspection according to the procedures specified in § 63.1282(b) to demonstrate that the closed-vent system operates with no detectable emissions.

(B) Conduct annual visual inspections for defects that could result in air emissions. Defects include, but are not limited to, visible cracks, holes, or gaps in piping; loose connections; or broken or missing caps or other closure devices. The owner or operator shall monitor a component or connection using the procedures specified in § 63.1282(b) to demonstrate that it operates with no detectable emissions following any time the component or connection is repaired or replaced or the connection is unsealed.

(ii) For closed-vent system components other than those specified in paragraph (c)(2)(i) of this section, the owner or operator shall:

(A) Conduct an initial inspection according to the procedures specified in § 63.1282(b) to demonstrate that the closed-vent system operates with no detectable emissions.

(B) Conduct annual inspections according to the procedures specified in § 63.1282(b) to demonstrate that the components or connections operate with no detectable emissions.

(C) Conduct annual visual inspections for defects that could result in air emissions. Defects include, but are not limited to, visible cracks, holes, or gaps in ductwork; loose connections; or broken or missing caps or other closure devices.

(3) In the event that a leak or defect is detected, the owner or operator shall repair the leak or defect as soon as practicable, except as provided in paragraph (c)(4) of this section.

(i) A first attempt at repair shall be made no later than 5 calendar days after the leak is detected.

(ii) Repair shall be completed no later than 15 calendar days after the leak is detected.

(4) Delay of repair of a closed-vent system for which leaks or defects have been detected is allowed if the repair is technically infeasible without a shutdown, as defined in § 63.1271, or if the owner or operator determines that emissions resulting from immediate repair would be greater than the fugitive emissions likely to result from delay of repair. Repair of such equipment shall be completed by the end of the next shutdown.

(5) Any parts of the closed-vent system or cover that are designated, as described in paragraphs (c)(5) (i) and (ii) of this section, as unsafe to inspect are exempt from the inspection requirements of paragraphs (c)(2) (i) and (ii) of this section if:

(i) The owner or operator determines that the equipment is unsafe to inspect because inspecting personnel would be exposed to an imminent or potential danger as a consequence of complying with paragraph (c)(2) (i) or (ii) of this section; and

(ii) The owner or operator has a written plan that requires inspection of the equipment as frequently as practicable during safe-to-inspect times.

(6) Any parts of the closed-vent system or cover that are designated, as described in paragraphs (c)(6) (i) and (ii) of this section, as difficult to inspect are exempt from the inspection requirements of paragraphs (c)(2) (i) and (ii) of this section if:

(i) The owner or operator determines that the equipment cannot be inspected without elevating the inspecting personnel more than 2 meters above a support surface; and

(ii) The owner or operator has a written plan that requires inspection of the equipment at least once every 5 years.

(7) Records shall be maintained as specified in § 63.1284(b)(5) through (8).

(d) *Control device monitoring requirements.* (1) For each control device except as provided for in paragraph (d)(2) of this section, the owner or operator shall install and operate a continuous parameter monitoring system in accordance with the requirements of paragraphs (d)(3) through (9) of this section that will allow a determination to be made whether the control device is achieving the applicable performance requirements of § 63.1281(d) or (e)(3). The continuous parameter monitoring system must meet the following specifications and requirements:

(i) Each continuous parameter monitoring system shall measure data values at least once every hour and record either:

(A) Each measured data value; or

(B) Each block average value for each 1-hour period or shorter periods calculated from all measured data values during each period. If values are measured more frequently than once per minute, a single value for each minute may be used to calculate the hourly (or shorter period) block average instead of all measured values.

(ii) The monitoring system must be installed, calibrated, operated, and maintained in accordance with the manufacturer's specifications or other written procedures that provide reasonable assurance that the monitoring equipment is operating properly.

(2) An owner or operator is exempted from the monitoring requirements specified in paragraphs (d)(3) through (9) of this section for the following types of control devices:

(i) A boiler or process heater in which all vent streams are introduced with the primary fuel or are used as the primary fuel;

(ii) A boiler or process heater with a design heat input capacity equal to or greater than 44 megawatts.

(3) The owner or operator shall install, calibrate, operate, and maintain a device equipped with a continuous recorder to measure the values of operating parameters appropriate for the control device as specified in either paragraph (d)(3)(i), (d)(3)(ii), or (d)(3)(iii) of this section.

(i) A continuous monitoring system that measures the following operating parameters as applicable:

(A) For a thermal vapor incinerator, a temperature monitoring device equipped with a continuous recorder. The monitoring device shall have a minimum accuracy of ±2 percent of the temperature being monitored in °C, or ±2.5 °C, whichever value is greater. The temperature sensor shall be installed at a location in the combustion chamber downstream of the combustion zone.

(B) For a catalytic vapor incinerator, a temperature monitoring device equipped with a continuous recorder. The device shall be capable of monitoring temperatures at two locations and have a minimum accuracy of ±2 percent of the temperatures being monitored in °C, or ±2.5 °C, whichever value is greater. One temperature sensor shall be installed in the vent stream at the nearest feasible point to the catalyst bed inlet and a second temperature sensor shall be installed in the vent stream at the nearest feasible point to the catalyst bed outlet.

(C) For a flare, a heat sensing monitoring device equipped with a continuous recorder that indicates the continuous ignition of the pilot flame.

(D) For a boiler or process heater with a design heat input capacity of less than 44 megawatts, a temperature monitoring device equipped with a continuous recorder. The temperature monitoring device shall have a minimum accuracy of ±2 percent of the temperature being monitored in °C, or ±2.5 °C, whichever value is greater. The temperature sensor shall be installed at a location in the combustion chamber downstream of the combustion zone.

(E) For a condenser, a temperature monitoring device equipped with a continuous recorder. The temperature monitoring device shall have a minimum accuracy of ±2 percent of the temperature being monitored in °C, or ±2.5 °C, whichever value is greater. The temperature sensor shall be installed at a location in the exhaust vent stream from the condenser.

(F) For a regenerative-type carbon adsorption system:

(*1*) A continuous parameter monitoring system to measure and record the average total regeneration stream mass flow or volumetric flow during each carbon bed regeneration cycle. The integrating regenerating stream flow monitoring device must have an accuracy of ±10 percent; and

(*2*) A continuous parameter monitoring system to measure and record the average carbon bed temperature for the duration of the carbon bed steaming cycle and to measure the actual carbon bed temperature after regeneration and within 15 minutes of completing the cooling cycle. The temperature monitoring device shall have a minimum accuracy of ±2 percent of the temperature being monitored in °C, or ±2.5 °C, whichever value is greater.

(G) For a nonregenerative-type carbon adsorption system, the owner or operator shall monitor the design carbon replacement interval established using a performance test performed in accordance with § 63.1282(d)(3) or a design analysis in accordance with § 63.1282(d)(4)(i)(F) and shall be based on the total carbon working capacity of the control device and source operating schedule.

(ii) A continuous monitoring system that measures the concentration level of organic compounds in the exhaust vent stream from the control device using an organic monitoring device equipped with a continuous recorder. The monitor must meet the requirements of Performance Specification 8 or 9 of appendix B of 40 CFR part 60 and must be installed, calibrated, and maintained according to the manufacturer's specifications.

(iii) A continuous monitoring system that measures alternative operating parameters other than those specified in paragraph (d)(3)(i) or (d)(3)(ii) of this section upon approval of the Administrator as specified in § 63.8(f)(1) through (5).

(4) Using the data recorded by the monitoring system, the owner or operator must calculate the daily average value for each monitored operating parameter for each operating day. If HAP emissions unit operation is continuous, the operating day is a 24-hour period. If the HAP emissions unit operation is not continuous, the operating day is the total number of hours of control device operation per 24-hour period. Valid data points must be available for 75 percent of the operating hours in an operating day to compute the daily average.

(5) For each operating parameter monitored in accordance with the requirements of paragraph (d)(3) of this section, the owner or operator shall comply with paragraph (d)(5)(i) of this section for all control devices, and when condensers are installed, the owner or operator shall also comply with paragraph (d)(5)(ii) of this section for condensers.

(i) The owner or operator shall establish a minimum operating parameter value or a maximum operating parameter value, as appropriate for the control device, to define the conditions at which the control device must be operated to continuously achieve the applicable performance requirements of § 63.1281(d)(1) or (e)(3)(ii). Each minimum or maximum operating parameter value shall be established as follows:

(A) If the owner or operator conducts performance tests in accordance with the requirements of § 63.1282(d)(3) to demonstrate that the control device achieves the applicable performance requirements specified in § 63.1281(d)(1) or (e)(3)(ii), then the minimum operating parameter value or the maximum operating parameter value shall be established based on values measured during the performance test and supplemented, as necessary, by control device design analysis or control device manufacturer's recommendations or a combination of both.

(B) If the owner or operator uses a control device design analysis in accordance with the requirements of § 63.1282(d)(4) to demonstrate that the control device achieves the applicable performance requirements specified in § 63.1281(d)(1) or (e)(3)(ii), then the minimum operating parameter value or the maximum operating parameter value shall be established based on the control device design analysis and may be supplemented by the control device manufacturer's recommendations.

(ii) The owner or operator shall establish a condenser performance curve showing the relationship between condenser outlet temperature and condenser control efficiency. The curve shall be established as follows:

(A) If the owner or operator conducts a performance test in accordance with the requirements of § 63.1282(d)(3) to demonstrate that the condenser achieves the applicable performance requirements in § 63.1281(d)(1) or (e)(3)(ii), then the condenser performance curve shall be based on values measured during the performance test and supplemented as necessary by control device design analysis, or control device

manufacturer's recommendations, or a combination or both.

(B) If the owner or operator uses a control device design analysis in accordance with the requirements of § 63.1282(d)(4)(i)(D) to demonstrate that the condenser achieves the applicable performance requirements specified in § 63.1281(d)(1) or (e)(3)(ii), then the condenser performance curve shall be based on the condenser design analysis and may be supplemented by the control device manufacturer's recommendations.

(C) As an alternative to paragraphs (d)(5)(ii)(A) and (B) of this section, the owner or operator may elect to use the procedures documented in the GRI report entitled, "Atmospheric Rich/Lean Method for Determining Glycol Dehydrator Emissions" (GRI-95/0368.1) as inputs for the model GRI-GLYCalc™, Version 3.0 or higher, to generate a condenser performance curve.

(6) An excursion for a given control device is determined to have occurred when the monitoring data or lack of monitoring data result in any one of the criteria specified in paragraphs (d)(6)(i) through (d)(6)(iv) of this section being met. When multiple operating parameters are monitored for the same control device and during the same operating day, and more than one of these operating parameters meets an excursion criterion specified in paragraphs (d)(6)(i) through (d)(6)(iv) of this section, then a single excursion is determined to have occurred for the control device for that operating day.

(i) An excursion occurs when the daily average value of a monitored operating parameter is less than the minimum operating parameter limit (or, if applicable, greater than the maximum operating parameter limit) established for the operating parameter in accordance with the requirements of paragraph (d)(5)(i) of this section.

(ii) An excursion occurs when average condenser efficiency calculated according to the requirements specified in § 63.1282(f)(2)(iii) is less than 95.0 percent, as specified in § 63.1282(f)(3).

(iii) An excursion occurs when the monitoring data are not available for at least 75 percent of the operating hours.

(iv) If the closed-vent system contains one or more bypass devices that could be used to divert all or a portion of the gases, vapors, or fumes from entering the control device, an excursion occurs when:

(A) For each bypass line subject to § 63.1281(c)(3)(i)(A) the flow indicator indicates that flow has been detected and that the stream has been diverted away from the control device to the atmosphere.

(B) For each bypass line subject to § 63.1281(c)(3)(i)(B), if the seal or closure mechanism has been broken, the bypass line valve position has changed, the key for the lock-and-key type lock has been checked out, or the car-seal has broken.

(7) For each excursion, except as provided for in paragraph (d)(8) of this section, the owner or operator shall be deemed to have failed to have applied control in a manner that achieves the required operating parameter limits. Failure to achieve the required operating parameter limits is a violation of this standard.

(8) An excursion is not a violation of the operating parameter limit as specified in paragraphs (d)(8)(i) and (d)(8)(ii) of this section.

(i) An excursion does not count toward the number of excused excursions allowed under paragraph (d)(8)(ii) of this section when the excursion occurs during any one of the following periods:

(A) During a period of startup, shutdown, or malfunction when the affected facility is operated during such period in accordance with the facility's startup, shutdown, and malfunction plan; or

(B) During periods of non-operation of the unit or the process that is vented to the control device (resulting in cessation of HAP emissions to which the monitoring applies).

(ii) For each control device, or combinations of control devices, installed on the same HAP emissions unit, one excused excursion is allowed per semiannual period for any reason. The initial semiannual period is the 6-month reporting period addressed by the first Periodic Report submitted by the owner or operator in accordance with § 63.1285(e) of this subpart.

(9) Nothing in paragraphs (d)(1) through (d)(8) of this section shall be construed to allow or excuse a monitoring parameter excursion caused by any activity that violates other applicable provisions of this subpart.

§ 63.1284 Recordkeeping requirements.

(a) The recordkeeping provisions of subpart A of this part, that apply and those that do not apply to owners and operators of facilities subject to this subpart are listed in Table 2 of this subpart.

(b) Except as specified in paragraphs (c) and (d) of this section, each owner or operator of a facility subject to this subpart shall maintain the records specified in paragraphs (b)(1) through (b)(10) of this section:

(1) The owner or operator of an affected source subject to the provisions of this subpart shall maintain files of all information (including all reports and notifications) required by this subpart. The files shall be retained for at least 5 years following the date of each occurrence, measurement, maintenance, corrective action, report or period.

(i) All applicable records shall be maintained in such a manner that they can be readily accessed.

(ii) The most recent 12 months of records shall be retained on site or shall be accessible from a central location by computer or other means that provides access within 2 hours after a request.

(iii) The remaining 4 years of records may be retained offsite.

(iv) Records may be maintained in hard copy or computer-readable form including, but not limited to, on paper, microfilm, computer, floppy disk, magnetic tape, or microfiche.

(2) Records specified in § 63.10(b)(2);

(3) Records specified in § 63.10(c) for each monitoring system operated by the owner or operator in accordance with the requirements of § 63.1283(d). Notwithstanding the previous sentence, monitoring data recorded during periods identified in paragraphs (b)(2)(i) through (b)(2)(iv) of this section shall not be included in any average or percent leak rate computed under this subpart. Records shall be kept of the times and durations of all such periods and any other periods during process or control device operation when monitors are not operating.

(i) Monitoring system breakdowns, repairs, calibration checks, and zero (low-level) and high-level adjustments;

(ii) Startup, shutdown, and malfunction events. During startup, shutdown and malfunction events, the owner or operator shall maintain records indicating whether or not the startup, shutdown, or malfunction plan, required under § 63.1272(d), was followed.

(iii) Periods of non-operation resulting in cessation of the emissions to which the monitoring applies; and

(iv) Excursions due to invalid data as defined in § 63.1283(d)(6)(iii).

(4) Each owner or operator using a control device to comply with § 63.1274 shall keep the following records up-to-date and readily accessible:

(i) Continuous records of the equipment operating parameters specified to be monitored under § 63.1283(d) or specified by the Administrator in accordance with § 63.1283(d)(3)(iii). For flares, the hourly records and records of pilot flame outages specified in § 63.1283(d)(3)(i)(C) shall be maintained in place of continuous records.

(ii) Records of the daily average value of each continuously monitored parameter for each operating day determined according to the procedures specified in § 63.1283(d)(4) of this subpart. For flares, records of the times and duration of all periods during which all pilot flames are absent shall be kept rather than daily averages.

(iii) Hourly records of whether the flow indicator specified under § 63.1281(c)(3)(i)(A) was operating and whether flow was detected at any time during the hour, as well as records of the times and durations of all periods when the vent stream is diverted from the control device or the monitor is not operating.

(iv) Where a seal or closure mechanism is used to comply with § 63.1281(c)(3)(i)(B), hourly records of flow are not required. In such cases, the owner or operator shall record that the monthly visual inspection of the seals or closure mechanism has been done, and shall record the duration of all periods when the seal mechanism is broken, the bypass line valve position has changed, or the key for a lock-and-key type lock has been checked out, and records of any car-seal that has broken.

(5) Records identifying all parts of the closed-vent system that are designated as unsafe to inspect in accordance with § 63.1283(c)(5), an explanation of why the equipment is unsafe to inspect, and the plan for inspecting the equipment.

(6) Records identifying all parts of the closed-vent system that are designated as difficult to inspect in accordance with § 63.1283(c)(6), an explanation of why the equipment is difficult to inspect, and the plan for inspecting the equipment.

(7) For each inspection conducted in accordance with § 63.1283(c), during which a leak or defect is detected, a record of the information specified in paragraphs (b)(7)(i) through (b)(7)(viii) of this section.

(i) The instrument identification numbers, operator name or initials, and identification of the equipment.

(ii) The date the leak or defect was detected and the date of the first attempt to repair the leak or defect.

(iii) Maximum instrument reading measured by the method specified in § 63.1283(c)(3) after the leak or defect is successfully repaired or determined to be nonrepairable.

(iv) "Repair delayed" and the reason for the delay if a leak or defect is not repaired within 15 calendar days after discovery of the leak or defect.

(v) The name, initials, or other form of identification of the owner or operator (or designee) whose decision it was that repair could not be effected without a shutdown.

(vi) The expected date of successful repair of the leak or defect if a leak or defect is not repaired within 15 calendar days.

(vii) Dates of shutdowns that occur while the equipment is unrepaired.

(viii) The date of successful repair of the leak or defect.

(8) For each inspection conducted in accordance with § 63.1283(c) during which no leaks or defects are detected, a record that the inspection was performed, the date of the inspection, and a statement that no leaks or defects were detected.

(9) Records of glycol dehydration unit baseline operations calculated as required under § 63.1281(e)(1).

(10) Records required in § 63.1281(e)(3)(i) documenting that the facility continues to operate under the conditions specified in § 63.1281(e)(2).

(c) An owner or operator that elects to comply with the benzene emission limit specified in § 63.1275(b)(1)(ii) shall document, to the Administrator's satisfaction, the following items:

(1) The method used for achieving compliance and the basis for using this compliance method; and

(2) The method used for demonstrating compliance with 0.90 megagrams per year of benzene.

(3) Any information necessary to demonstrate compliance as required in the methods specified in paragraphs (c)(1) and (c)(2) of this section.

(d) An owner or operator that is exempt from control requirements under § 63.1274(d) shall maintain the records specified in paragraph (d)(1) or (d)(2) of this section, as appropriate, for each glycol dehydration unit that is not controlled according to the requirements of § 63.1274(c).

(1) The actual annual average natural gas throughput (in terms of natural gas flowrate to the glycol dehydration unit per day), as determined in accordance with § 63.1282(a)(1); or

(2) The actual average benzene emissions (in terms of benzene emissions per year), as determined in accordance with § 63.1282(a)(2).

(e) Record the following when using a flare to comply with § 63.1281(d):

(1) Flare design (i.e., steam-assisted, air-assisted, or non-assisted);

(2) All visible emission readings, heat content determinations, flowrate measurements, and exit velocity determinations made during the compliance determination required by § 63.1282(d)(2); and

(3) All periods during the compliance determination when the pilot flame is absent.

§ 63.1285 Reporting requirements.

(a) The reporting provisions of subpart A, of this part that apply and those that do not apply to owners and operators of facilities subject to this subpart are listed in Table 2 of this subpart.

(b) Each owner or operator of a facility subject to this subpart shall submit the information listed in paragraphs (b)(1) through (b)(6) of this section, except as provided in paragraph (b)(7) of this section.

(1) The initial notifications required for existing affected sources under § 63.9(b)(2) shall be submitted by 1 year after an affected source becomes subject to the provisions of this subpart or by June 17, 2000, whichever is later. Affected sources that are major sources on or before June 17, 2000 and plan to be area sources by June 17, 2002 shall include in this notification a brief, nonbinding description of a schedule for the action(s) that are planned to achieve area source status.

(2) The date of the performance evaluation as specified in § 63.8(e)(2), required only if the owner or operator is requested by the Administrator to conduct a performance evaluation for a continuous monitoring system. A separate notification of the performance evaluation is not required if it is included in the initial notification submitted in accordance with paragraph (b)(1) of this section.

(3) The planned date of a performance test at least 60 days before the test in accordance with § 63.7(b). Unless requested by the Administrator, a site-specific test plan is not required by this subpart. If requested by the Administrator, the owner or operator must also submit the site-specific test plan required by § 63.7(c) with the notification of the performance test. A separate notification of the performance test is not required if it is included in the initial notification submitted in accordance with paragraph (b)(1) of this section.

(4) A Notification of Compliance Status Report as described in paragraph (d) of this section;

(5) Periodic Reports as described in paragraph (e) of this section; and

(6) Startup, shutdown, and malfunction reports, as specified in § 63.10(d)(5), shall be submitted as required. Separate startup, shutdown, or malfunction reports as described in § 63.10(d)(5)(i) are not required if the information is included in the Periodic Report specified in paragraph (e) of this section.

(7) Each owner or operator of a glycol dehydration unit subject to this subpart that is exempt from the control

requirements for glycol dehydration unit process vents in § 63.1275, is exempt from all reporting requirements for major sources in this subpart for that unit.

(c) [Reserved]

(d) Each owner or operator of a source subject to this subpart shall submit a Notification of Compliance Status Report as required under § 63.9(h) within 180 days after the compliance date specified in § 63.1270(d). In addition to the information required under § 63.9(h), the Notification of Compliance Status Report shall include the information specified in paragraphs (d)(1) through (d)(10) of this section. This information may be submitted in an operating permit application, in an amendment to an operating permit application, in a separate submittal, or in any combination of the three. If all of the information required under this paragraph have been submitted at any time prior to 180 days after the applicable compliance dates specified in § 63.1270(d), a separate Notification of Compliance Status Report is not required. If an owner or operator submits the information specified in paragraphs (d)(1) through (d)(9) of this section at different times, and/or different submittals, later submittals may refer to earlier submittals instead of duplicating and resubmitting the previously submitted information.

(1) If a closed-vent system and a control device other than a flare are used to comply with § 63.1274, the owner or operator shall submit:

(i) The design analysis documentation specified in § 63.1282(d)(4) of this subpart if the owner or operator elects to prepare a design analysis; or

(ii) If the owner or operator elects to conduct a performance test, the performance test results including the information specified in paragraphs (d)(1)(ii)(A) and (B) of this section. Results of a performance test conducted prior to the compliance date of this subpart can be used provided that the test was conducted using the methods specified in § 63.1282(d)(3), and that the test conditions are representative of current operating conditions.

(A) The percent reduction of HAP or TOC, or the outlet concentration of HAP or TOC (parts per million by volume on a dry basis), determined as specified in § 63.1282(d)(3) of this subpart; and

(B) The value of the monitored parameters specified in § 63.1283(d) of this subpart, or a site-specific parameter approved by the permitting agency, averaged over the full period of the performance test.

(2) If a closed-vent system and a flare are used to comply with § 63.1274, the owner or operator shall submit performance test results including the information in paragraphs (d)(2)(i) and (ii) of this section.

(i) All visible emission readings, heat content determinations, flowrate measurements, and exit velocity determinations made during the compliance determination required by § 63.1282(d)(2) of this subpart, and

(ii) A statement of whether a flame was present at the pilot light over the full period of the compliance determination.

(3) The owner or operator shall submit one complete test report for each test method used for a particular source.

(i) For additional tests performed using the same test method, the results specified in paragraph (d)(1)(ii) of this section shall be submitted, but a complete test report is not required.

(ii) A complete test report shall include a sampling site description, description of sampling and analysis procedures and any modifications to standard procedures, quality assurance procedures, record of operating conditions during the test, record of preparation of standards, record of calibrations, raw data sheets for field sampling, raw data sheets for field and laboratory analyses, documentation of calculations, and any other information required by the test method.

(4) For each control device other than a flare used to meet the requirements of § 63.1274, the owner or operator shall submit the information specified in paragraphs (d)(4)(i) through (iii) of this section for each operating parameter required to be monitored in accordance with the requirements of § 63.1283(d).

(i) The minimum operating parameter value or maximum operating parameter value, as appropriate for the control device, established by the owner or operator to define the conditions at which the control device must be operated to continuously achieve the applicable performance requirements of § 63.1281(d)(1) or (e)(3)(ii).

(ii) An explanation of the rationale for why the owner or operator selected each of the operating parameter values established in § 63.1283(d)(5) of this subpart. This explanation shall include any data and calculations used to develop the value, and a description of why the chosen value indicates that the control device is operating in accordance with the applicable requirements of § 63.1281(d)(1) or (e)(3)(ii).

(iii) A definition of the source's operating day for purposes of determining daily average values of monitored parameters. The definition shall specify the times at which an operating day begins and ends.

(5) Results of any continuous monitoring system performance evaluations shall be included in the Notification of Compliance Status Report.

(6) After a title V permit has been issued to the owner or operator of an affected source, the owner or operator of such source shall comply with all requirements for compliance status reports contained in the source's title V permit, including reports required under this subpart. After a title V permit has been issued to the owner or operator of an affected source, and each time a notification of compliance status is required under this subpart, the owner or operator of such source shall submit the notification of compliance status to the appropriate permitting authority following completion of the relevant compliance demonstration activity specified in this subpart.

(7) The owner or operator that elects to comply with the requirements of § 63.1275(b)(1)(ii) shall submit the records required under § 63.1284(c).

(8) The owner or operator shall submit an analysis demonstrating whether an affected source is a major source using the maximum throughput calculated according to § 63.1270(a).

(9) The owner or operator shall submit a statement as to whether the source has complied with the requirements of this subpart.

(10) The owner or operator shall submit the analysis prepared under § 63.1281(e)(2) to demonstrate that the conditions by which the facility will be operated to achieve an overall HAP emission reduction of 95.0 percent through process modifications or a combination of process modifications and one or more control devices.

(e) *Periodic Reports.* An owner or operator shall prepare Periodic Reports in accordance with paragraphs (e)(1) and (2) of this section and submit them to the Administrator.

(1) An owner or operator shall submit Periodic Reports semiannually, beginning 60 operating days after the end of the applicable reporting period. The first report shall be submitted no later than 240 days after the date the Notification of Compliance Status Report is due and shall cover the 6-month period beginning on the date the Notification of Compliance Status Report is due.

(2) The owner or operator shall include the information specified in paragraphs (e)(2)(i) through (viii) of this section, as applicable.

(i) The information required under § 63.10(e)(3). For the purposes of this

subpart and the information required under § 63.10(e)(3), excursions (as defined in § 63.1283(d)(6)) shall be considered excess emissions.

(ii) A description of all excursions as defined in § 63.1283(d)(6) of this subpart that have occurred during the 6-month reporting period.

(A) For each excursion caused when the daily average value of a monitored operating parameter is less than the minimum operating parameter limit (or, if applicable, greater than the maximum operating parameter limit), as specified in § 63.1283(d)(6)(i), the report must include the daily average values of the monitored parameter, the applicable operating parameter limit, and the date and duration of the period that the excursion occurred.

(B) For each excursion caused when the 30-day average condenser control efficiency is less than 95.0 percent, as specified in § 63.1283(d)(6)(ii), the report must include the 30-day average values of the condenser control efficiency, and the date and duration of the period that the excursion occurred.

(C) For each excursion caused by lack of monitoring data, as specified in § 63.1283(d)(6)(iii), the report must include the date and duration of period when the monitoring data were not collected and the reason why the data were not collected.

(iii) For each inspection conducted in accordance with § 63.1283(c) during which a leak or defect is detected, the records specified in § 63.1284(b)(7) must be included in the next Periodic Report.

(iv) For each closed-vent system with a bypass line subject to § 63.1281(c)(3)(i)(A), records required under § 63.1284(b)(4)(iii) of all periods when the vent stream is diverted from the control device through a bypass line. For each closed-vent system with a bypass line subject to § 63.1281(c)(3)(i)(B), records required under § 63.1284(b)(4)(iv) of all periods in which the seal or closure mechanism is broken, the bypass valve position has changed, or the key to unlock the bypass line valve was checked out.

(v) If an owner or operator elects to comply with § 63.1275(b)(1)(ii), the records required under § 63.1284(c)(3).

(vi) The information in paragraphs (e)(2)(vi)(A) and (B) of this section shall be stated in the Periodic Report, when applicable.

(A) No excursions.

(B) No continuous monitoring system has been inoperative, out of control, repaired, or adjusted.

(vii) Any change in compliance methods as specified in § 63.1275(b).

(viii) If the owner or operator elects to comply with § 63.1275(c)(2), the records required under § 63.1284(b)(10).

(f) *Notification of process change.* Whenever a process change is made, or a change in any of the information submitted in the Notification of Compliance Status Report, the owner or operator shall submit a report within 180 days after the process change is made or as a part of the next Periodic Report as required under paragraph (e) of this section, whichever is sooner. The report shall include:

(1) A brief description of the process change:

(2) A description of any modification to standard procedures or quality assurance procedures;

(3) Revisions to any of the information reported in the original Notification of Compliance Status Report under paragraph (d) of this section; and

(4) Information required by the Notification of Compliance Status Report under paragraph (d) of this section for changes involving the addition of processes or equipment.

§ 63.1286 Delegation of authority.

(a) In delegating implementation and enforcement authority to a State under section 112(l) of the Act, the authorities contained in paragraph (b) of this section shall be retained by the Administrator and not transferred to a State.

(b) Authorities will not be delegated to States for §§ 63.1282 and 63.1287 of this subpart.

§ 63.1287 Alternative means of emission limitation.

(a) If, in the judgment of the Administrator, an alternative means of emission limitation will achieve a reduction in HAP emissions at least equivalent to the reduction in HAP emissions from that source achieved under the applicable requirements in §§ 63.1274 through 63.1281, the Administrator will publish a notice in the **Federal Register** permitting the use of the alternative means for purposes of compliance with that requirement. The notice may condition the permission on requirements related to the operation and maintenance of the alternative means.

(b) Any notice under paragraph (a) of this section shall be published only after public notice and an opportunity for a hearing.

(c) Any person seeking permission to use an alternative means of compliance under this section shall collect, verify, and submit to the Administrator information showing that this means achieves equivalent emission reductions.

§ 63.1288 [Reserved]

§ 63.1289 [Reserved]

Appendix to Subpart HHH—Tables

TABLE 1.—LIST OF HAZARDOUS AIR POLLUTANTS (HAP) FOR SUBPART HHH

CAS Number[a]	Chemical name
75070 ...	Acetaldehyde
71432 ...	Benzene (includes benzene in gasoline)
75150 ...	Carbon disulfide
463581	Carbonyl sulfide
100414	Ethyl benzene
107211	Ethylene glycol
75050 ...	Acetaldehyde
50000 ...	Formaldehyde
110543	n-Hexane
91203 ...	Naphthalene
108883	Toluene
540841	2,2,4-Trimethylpentane
1330207	Xylenes (isomers and mixture)
95476 ...	o-Xylene
108383	m-Xylene
106423	p-Xylene

[a] CAS numbers refer to the Chemical Abstracts Services registry number assigned to specific compounds, isomers, or mixtures of compounds.

TABLE 2 TO SUBPART HHH.—APPLICABILITY OF 40 CFR PART 63 GENERAL PROVISIONS TO SUBPART HHH

General provisions reference	Applicable to subpart HHH	Explanation
§ 63.1(a)(1)	Yes	
§ 63.1(a)(2)	Yes	
§ 63.1(a)(3)	Yes	
§ 63.1(a)(4)	Yes	
§ 63.1(a)(5)	No	Section reserved.
§ 63.1(a)(6) through (a)(8)	Yes	
§ 63.1(a)(9)	No	Section reserved.
§ 63.1(a)(10)	Yes	

TABLE 2 TO SUBPART HHH.—APPLICABILITY OF 40 CFR PART 63 GENERAL PROVISIONS TO SUBPART HHH—Continued

General provisions reference	Applicable to subpart HHH	Explanation
§ 63.1(a)(11)	Yes	
§ 63.1(a)(12) through (a)(14)	Yes	
§ 63.1(b)(1)	No	Subpart HHH specifies applicability.
§ 63.1(b)(2)	Yes	
§ 63.1(b)(3)	No.	
§ 63.1(c)(1)	No	Subpart HHH specifies applicability.
§ 63.1(c)(2)	No	
§ 63.1(c)(3)	No	Section reserved.
§ 63.1(c)(4)	Yes	
§ 63.1(c)(5)	Yes	
§ 63.1(d)	No	Section reserved.
§ 63.1(e)	Yes	
§ 63.2	Yes	Except definition of major source is unique for this source category and there are additional definitions in subpart HHH.
§ 63.3(a) through (c)	Yes	
§ 63.4(a)(1) through (a)(3)	Yes	
§ 63.4(a)(4)	No	Section reserved.
§ 63.4(a)(5)	Yes	
§ 63.4(b)	Yes	
§ 63.4(c)	Yes	
§ 63.5(a)(1)	Yes	
§ 63.5(a)(2)	No	Preconstruction review required only for major sources that commence construction after promulgation of the standard.
§ 63.5(b)(1)	Yes	
§ 63.5(b)(2)	No	Section reserved.
§ 63.5(b)(3)	Yes	
§ 63.5(b)(4)	Yes	
§ 63.5(b)(5)	Yes	
§ 63.5(b)(6)	Yes	
§ 63.5(c)	No	Section reserved.
§ 63.5(d)(1)	Yes	
§ 63.5(d)(2)	Yes	
§ 63.5(d)(3)	Yes	
§ 63.5(d)(4)	Yes	
§ 63.5(e)	Yes	
§ 63.5(f)(1)	Yes	
§ 63.5(f)(2)	Yes	
§ 63.6(a)	Yes	
§ 63.6(b)(1)	Yes	
§ 63.6(b)(2)	Yes	
§ 63.6(b)(3)	Yes	
§ 63.6(b)(4)	Yes	
§ 63.6(b)(5)	Yes	
§ 63.6(b)(6)	No	Section reserved.
§ 63.6(b)(7)	Yes	
§ 63.6(c)(1)	Yes	
§ 63.6(c)(2)	Yes	
§ 63.6(c)(3) and (c)(4)	No	Section reserved.
§ 63.6(c)(5)	Yes	
§ 63.6(d)	No	Section reserved.
§ 63.6(e)	Yes	
§ 63.6(e)	Yes	Except as otherwise specified.
§ 63.6(e)(1)(i)	No	Addressed in § 63.1272.
§ 63.6(e)(1)(ii)	Yes	
§ 63.6(e)(1)(iii)	Yes	
§ 63.6(e)(2)	Yes	
§ 63.6(e)(3)(i)	Yes	Except as otherwise specified.
§ 63.6(e)(3)(i)(A)	No	Addressed by § 63.1272(c).
§ 63.6(e)(3)(i)(B)	Yes	
§ 63.6(e)(3)(i)(C)	Yes	
§ 63.6(e)(3)(ii) through (3)(vi)	Yes	
§ 63.6(e)(3)(vii).		
§ 63.6(e)(3)(vii) (A)	Yes	
§ 63.6(e)(3)(vii) (B)	Yes	Except that the plan must provide for operation in compliance with § 63.1272(c).
§ 63.6(e)(3)(vii) (C)	Yes	
§ 63.6(e)3)(viii)	Yes	
§ 63.7(e)(1)	Yes	
§ 63.7(e)(2)	Yes	
§ 63.7(e)(3)	Yes	
§ 63.7(e)(4)	Yes	
§ 63.7(f)	Yes	
§ 63.7(g)	Yes	
§ 63.7(h)	Yes	
§ 63.8(a)(1)	Yes	
§ 63.8(a)(2)	Yes	
§ 63.8(a)(3)	No	Section reserved.
§ 63.8(a)(4)	Yes	
§ 63.8(b)(1)	Yes	
§ 63.8(b)(2)	Yes	
§ 63.8(b)(3)	Yes	

TABLE 2 TO SUBPART HHH.—APPLICABILITY OF 40 CFR PART 63 GENERAL PROVISIONS TO SUBPART HHH—Continued

General provisions reference	Applicable to subpart HHH	Explanation
§ 63.8(c)(1)	Yes	
§ 63.8(c)(2)	Yes	
§ 63.8(c)(3)	Yes	
§ 63.8(c)(4)	No.	
§ 63.8(c)(5) through (c)(8)	Yes	
§ 63.8(d)	Yes	
§ 63.8(e)	Yes	Subpart HHH does not specifically require continuous emissions monitor performance evaluations, however, the Administrator can request that one be conducted.
§ 63.8(f)(1) through (f)(5)	Yes	
§ 63.8(f)(6)	No	Subpart HHH does not require continuous emissions monitoring.
§ 63.8(g)	No	Subpart HHH specifies continuous monitoring system data reduction requirements.
§ 63.9(a)	Yes	
§ 63.9(b)(1)	Yes	
§ 63.9(b)(2)	Yes	Sources are given 1 year (rather than 120 days) to submit this notification.
§ 63.9(b)(3)	Yes	
§ 63.9(b)(4)	Yes	
§ 63.9(b)(5)	Yes	
§ 63.9(c)	Yes	
§ 63.9(d)	Yes	
§ 63.9(e)	Yes	
§ 63.9(f)	No.	
§ 63.9(g)	Yes	
§ 63.9(h)(1) through (h)(3)	Yes	
§ 63.9(h)(4)	No	Section reserved.
§ 63.9(h)(5) and (h)(6)	Yes	
§ 63.9(i)	Yes	
§ 63.9(j)	Yes	
§ 63.10(a)	Yes	
§ 63.10(b)(1)	Yes	
§ 63.10(b)(2)	Yes	
§ 63.10(b)(3)	No	
§ 63.10(c)(1)	Yes	
§ 63.10(c)(2) through (c)(4)	No	Sections reserved.
§ 63.10(c)(5) through (c)(8)	Yes	
§ 63.10(c)(9)	No	Section reserved.
§ 63.10(c)(10) through (c)(15)	Yes	
§ 63.10(d)(1)	Yes	
§ 63.10(d)(2)	Yes	
§ 63.10(d)(3)	Yes	
§ 63.10(d)(4)	Yes	
§ 63.10(d)(5)	Yes	Subpart HHH requires major sources to submit a startup, shutdown and malfunction report semi-annually.
§ 63.10(e)(1)	Yes	
§ 63.10(e)(2)	Yes	
§ 63.10(e)(3)(i)	Yes	Subpart HHH requires major sources to submit Periodic Reports semi-annually.
§ 63.10(e)(3)(i)(A)	Yes	
§ 63.10(e)(3)(i)(B)	Yes	
§ 63.10(e)(3)(i)(C)	No	Subpart HHH does not require quarterly reporting for excess emissions.
§ 63.10(e)(3)(ii) through (e)(3)(viii)	Yes	
§ 63.10(f)	Yes	
§ 63.11(a) and (b)	Yes	
§ 63.12(a) through (c)	Yes	
§ 63.13(a) through (c)	Yes	
§ 63.14(a) and (b)	Yes	
§ 63.15(a) and (b)	Yes	

[FR Doc. 99-12894 Filed 6-16-99; 8:45 am]
BILLING CODE 6560-50-P

assessing the impact on small entities of any rule subject to the notice-and-comment rulemaking requirements. Because this action is exempt from such requirements, as described above, it is not subject to RFA.

G. Submission to Congress and the General Accounting Office

Under 5 U.S.C. of the APA, 5 U.S.C. 801(a)(1)(A), as added by the Small Business Regulatory Enforcement Fairness Act of 1996 (SBREFA), EPA submitted, by the date of publication of this rule, a report containing this rule and other required information to the U.S. Senate, the U.S. House of Representatives and the Comptroller General of the General Accounting Office. This rule is not a "major rule" as defined by 5 U.S.C. 804(2), as amended.

H. Paperwork Reduction Act

This action does not contain any information collection requirements which require OMB approval under the Paperwork Reduction Act (44 U.S.C. 3501 et seq.)

I. Judicial Review

Under CAA section 307(b)(1), a petition to review today's action may be filed in the Court of Appeals for the District of Columbia within 60 days of June 22, 1999.

Dated: June 14, 1999.

Carol M. Browner,

Administrator.

[FR Doc. 99-15543 Filed 6-21-99; 8:45 am]

BILLING CODE 6560-50-P

ENVIRONMENTAL PROTECTION AGENCY

40 CFR Part 63

[IL-64-2-5807; FRL-6344-5]

RIN 2060-AE41

National Emission Standards for Hazardous Air Pollutants for Steel Pickling—HCl Process Facilities and Hydrochloric Acid Regeneration Plants

AGENCY: Environmental Protection Agency (EPA).

ACTION: Final rule.

SUMMARY: This action promulgates national emission standards for hazardous air pollutants (NESHAP) for hydrochloric acid process steel pickling facilities and hydrochloric acid regeneration plants pursuant to section 112 of the Clean Air Act (Act). Major source facilities subject to the rule emit hydrochloric acid (HCl), a hazardous air pollutant (HAP). Chronic exposure to HCl has been reported to cause gastritis, chronic bronchitis, dermatitis, and photosensitization. Acute inhalation exposure to HCl may cause hoarseness, inflammation and ulceration of the respiratory tract, chest pain, and pulmonary edema. Hydrochloric acid regeneration plants also emit chlorine (Cl_2), which is also a HAP. Acute exposure to high levels of Cl_2 results in chest pain, vomiting, toxic pneumonitis, pulmonary edema, and death. At lower levels, Cl_2 is a potent irritant to the eyes, the upper respiratory tract, and lungs. The final rule provides public health protection by requiring new or existing pickling lines that use hydrochloric acid as the primary pickling solution, hydrochloric acid regeneration plants, and acid storage tanks to meet emission standards reflecting application of the maximum achievable control technology (MACT). Implementation of the rule is expected to reduce HAP emissions by more than 2,200 megagrams per year (Mg/yr) (2,500 tons per year (tpy) from current levels.

EFFECTIVE DATE: This final rule is effective on June 22, 1999. See the **SUPPLEMENTARY INFORMATION** section concerning judicial review.

ADDRESSES: Docket. Docket A-95-43, containing the information considered by the EPA in development of the final rule, is available for public inspection between 8 a.m. and 5:30 p.m., Monday through Friday except for Federal holidays, at the following address: U.S. Environmental Protection Agency, Air and Radiation Docket and Information Center (6102), 401 M Street SW, Washington, DC 20460; telephone: (202) 260-7548. The docket is located at the above address in Room M-1500, Waterside Mall (ground floor). A reasonable fee may be charged for copying.

FOR FURTHER INFORMATION CONTACT: Jim Maysilles, Metals Group, Emission Standards Division (MD-13), U.S. Environmental Protection Agency, Research Triangle Park, North Carolina 27711, telephone number (919) 541-3265, facsimile number (919) 541-5600, electronic mail address, "maysilles.jim@epa.gov".

SUPPLEMENTARY INFORMATION:

Regulated Entities.

Entities potentially regulated by this action are those that emit or have the potential to emit HAP listed in section 112(b) of the Act. Regulated categories and entities include:

Category	Examples of regulated entities
Industry	HCl steel pickling plants and acid regeneration plants (SIC 3312, 3315, and 3317).
Federal government	Not affected.
State/local/tribal government.	Not affected.

This table is not intended to be exhaustive, but rather provides a guide for readers regarding entities likely to be regulated by this action. This table lists the types of entities of which EPA is aware that could potentially be regulated by this action. Other types of entities not listed in the table could also be regulated. To determine if your facility is regulated by this action, you should carefully examine the applicability criteria in section III.A of this document and in § 63.1155 of the final rule. If you have any questions regarding the applicability of this action to a particular entity, consult the person listed in the preceding **FOR FURTHER INFORMATION CONTACT SECTION.**

Judicial Review

The NESHAP for Steel Pickling Facilities—HCl Process was proposed on September 18, 1997 (62 FR 49051); this action announces EPA's final decisions on this rule. Under section 307(b)(1) of the Act, judicial review of this final rule is available only by filing a petition for review in the U.S. Court of Appeals for the District of Columbia Circuit within 60 days of today's publication of this final rule. Under section 307(b)(2) of the Act, the requirements established by today's final rule may not be challenged later in any civil or criminal proceeding brought by EPA to enforce these requirements.

Technology Transfer Network

In addition to being available in the docket, an electronic copy of today's document, which includes the regulatory text, is available through the TTN at the UATW. Following promulgation, a copy of the rule will be posted at the TTN's policy and guidance page for newly proposed or promulgated rules (http://www.epa.gov/ttn/oarpg/t3pfpr.html). The TTN facilitates the exchange of information in various areas of air pollution control, such as technology. If more information on the TTN is needed, call the TTN HELP line at (919) 541-5384.

Background Information Document

A background information document (BID) for the promulgated standards containing a summary of all the public

comments made on the proposed rule and the EPA's response to those comments is available in the docket for this rulemaking. The BID also is available from the U.S. EPA Library (MD-35), Research Triangle Park, North Carolina 27711, telephone (919) 541-2777; or from the National Technical Information Service, 5285 Port Royal Road, Springfield, Virginia 22161, telephone (703) 487-4650. Please refer to "National Emission Standards for Hazardous Air Pollutants for Steel Pickling—HCl Process Facilities and Hydrochloric Acid Regeneration Plants—Background Information for Promulgated Standards." (EPA-453/R-98-010b). The BID is posted on the Technology Transfer Network (TTN) at the Unified Air Toxics Website (UATW) (http://www.epa.gov/ttn/uatw/7_10yrstds.html).

Outline

The following outline is provided to aid in reading this preamble to the final rule:

I. Statutory Authority
II. Background
III. Summary
A. Summary of Final Rule and Changes Since Proposal
1. Applicability
2. Definitions
3. Emission Standards
4. Operational and Equipment Standards
5. Compliance Dates
6. Maintenance Requirements
7. Performance Testing and Test Methods
8. Monitoring Requirements
9. Notification, Reporting, and Recordkeeping Requirements
10. Delegation of Authority
11. Display of OMB Control Numbers
B. Summary of Impacts
IV. Summary of Major Public Comments and Responses
A. Applicability
B. Definitions
C. Emission Standards
1. Pickling Lines
2. Hydrochloric Acid Regeneration Plants
3. Acid Storage Vessels
4. Assessment of HCl as a Threshold Pollutant Under Section 112(d)(4)
D. Compliance Dates and Maintenance Requirements
E. Performance Testing and Test Methods
F. Monitoring Requirements
G. Recordkeeping Requirements
V. Administrative Requirements
A. Docket
B. Executive Order 12866: Regulatory Planning Review
C. Executive Order 13045: Protection of Children from Environmental Health Risks and Safety Risks
D. Executive Order 12875: Enhancing the Intergovernmental Partnerships
E. Unfunded Mandates Reform Act
F. Regulatory Flexibility Act
G. Submission to Congress and the General Accounting Office
H. Paperwork Reduction Act
I. National Technology Transfer and Advancement Act
J. Pollution Prevention Act
K. Executive Order 13084: Consultation and Coordination with Indian Tribal Governments

I. Statutory Authority

The statutory authority for this rule is provided by sections 101, 112, 114, 116, and 301 of the Clean Air Act, as amended; 42 U.S.C., 7401, 7412, 7414, 7416, and 7601.

II. Background

Section 112(c) of the Act requires the EPA to list each category of major and area sources, as appropriate, emitting one or more of the HAP listed in section 112(b) of the Act. On July 16, 1992 (57 FR 31576), the EPA published a list of major and area sources for which NESHAP are to be promulgated, followed by a schedule for promulgation of those standards (58 FR 63941, December 3, 1993). "Steel Pickling—HCl Process" is included on the list of major sources for which EPA must establish national emission standards. The term "major source" means a source emitting 10 tpy or more of any one HAP or 25 tpy or more of any combination of HAP.

The EPA proposed national emission standards for this source category on September 18, 1997 (62 FR 49052). The proposed rule, BID, and other materials containing information used in developing the proposed rule were made available for review and comment. A 60-day comment period from September 18, 1997 to November 17, 1997, was provided to accept written comments from the public. The opportunity for a public hearing was provided to allow interested people to present oral comments on the rulemaking. However, the EPA did not receive a request for a public hearing, so a public hearing was not held.

The EPA received a total of 15 comments on the proposed standards from industry, trade associations, States and representative associations, vendors, and engineering firms. A copy of each comment letter is available for public inspection in Docket No. A-95-43. The EPA held followup discussions with various commenters to clarify specific issues raised in their written comments that were submitted to the Agency during the comment period. Copies of correspondence and other information exchanged between the EPA and the commenters during the post-comment period are available for inspection in the docket.

All of the comments received were reviewed and carefully considered by the EPA. Changes to the rule were made based on public comments where EPA determined it to be appropriate. The final rule and changes made since proposal are summarized in section III of this document; a summary of responses to major comments is included in section IV. Additional discussion of the EPA's responses to public comments is presented in the BID for the final rule.

III. Summary

A. Summary of Final Rule and Changes Since Proposal

1. Applicability

Several changes were made to the applicability provisions of the proposed rule to clarify the regulated source category and affected sources. As proposed, the regulated source category includes steel pickling facilities and acid regeneration plants. Thus, the regulated source category may consist of a stand-alone steel pickling facility or acid regeneration plant that is a major source of HAP or a steel pickling facility and/or acid regeneration plant that is part of a major source of HAP. The title of the final rule has been changed to include acid regeneration plants as part of the source category. This change is made to clarify that the regulation applies to hydrochloric acid regeneration plants, which is not apparent in the original title.

A steel pickling facility is a facility with a collection of equipment and tanks configured for the pickling process, including immersion, drain, and rinse tanks. A steel pickling facility may have one or more pickling lines. Conditions that distinguish pickling from other operations such as cleaning or surface activation are now defined such that each new or existing pickling line (batch or continuous process) using an acid solution in any tank in which hydrochloric acid is at a concentration of 6 percent by weight or greater and has a temperature of 100° F or greater is subject to the rule. For the purposes of the rule, steel pickling is limited to hydrochloric acid pickling of carbon steels, which contain approximately 2 percent or less carbon, 1.65 percent or less manganese, 0.6 percent or less silicon, and 0.6 percent or less copper.

An acid regeneration plant includes the collection of equipment and processes configured to reconstitute fresh hydrochloric acid pickling solution from spent pickle liquor using a thermal treatment process. A new or existing plant that regenerates only pickling solution other than HCl is not subject to the rule.

The rule is not applicable to facilities that pickle only specialty steels. Specialty steel means a category of steel that includes silicon electrical, alloy, tool, and stainless steels. Specialty steels are pickled by a process that may include the use of hydrochloric acid but also includes the use of other acids, which may be mixed with hydrochloric acid in the same pickling bath or used in separate baths as part of a multiacid/multibath pickling sequence. The EPA will determine at a later date if the specialty steel pickling process should or should not be subject to the requirements of a rule that limits HCl emissions.

2. Definitions

The title acid regeneration plant is changed to hydrochloric acid regeneration plant to clarify the applicability of the rule.

The title acid storage tank is changed to hydrochloric acid storage vessel to clarify the applicability of the rule. The definition is changed to apply only to a stationary vessel, not a temporary or mobile vessel, that is used for the bulk containment of virgin or regenerated hydrochloric acid.

The term "vessel" rather than "tank" is used for containers used to store hydrochloric acid, in order to be consistent with terminology used in other subparts of this part to define containers that are used for chemical storage. Similarly, the term "tank" is used for containers that are integral parts of processes, such as acid baths used in pickling lines.

A definition of carbon steel is added to identify processes to which the rule applies.

The definition of closed-vent system is modified to state that emissions may be transported into any device that is capable of reducing or collecting emissions, not necessarily a control device.

The definition *hydrochloric acid regeneration plant* production mode is added to assist in clarifying that the operating and monitoring requirements for hydrochloric acid regeneration plants apply only while the plant is operating in a manner to produce usable regenerated acid or iron oxide.

The definition of *responsible maintenance official* is added to identify a person who is designated to have signature authority for records and reports required under this rule.

The definition of *specialty steel* is added to identify similar processes to which the rule does not apply.

The final rule defines *steel pickling* to mean "the chemical removal of iron oxide mill scale that is formed on steel surfaces during hot rolling or hot forming of semi-finished steel products through contact with an aqueous solution of acid where such contact occurs prior to shaping or coating of the finished steel product. This definition does not include removal of light rust or scale from finished steel products or activation of the metal surface prior to plating or coating."

The definition of *steel pickling facility* is changed to refer only to facilities that conduct pickling.

Hydrochloric acid regeneration plants are discussed separately and also specifically identified in the title of the final rule as distinct entities.

3. Emission Standards

No changes were made regarding the technologies serving as the basis of the proposed standards. The emission control technology identified as achieving the MACT floor control level (wet scrubbing) is discussed in section VII.C of the preamble to the proposed rule (62 FR 49052, September 18, 1997).

The emission standards in §§ 63.1157 and 63.1158 of the proposed rule have been revised. Sections 63.1157 and 63.1158 of the proposed rule included HCl emission standards for existing and new HCl pickling lines based on two options: An HCl emission rate corresponding to a minimum collection efficiency of the air pollution control device, or a maximum concentration of HCl in the exit gases. Based on public comment, EPA revised the level of the standards from that proposed for pickling lines and acid regeneration plants. The final standards are shown in Table 1.

The final standards retain the alternative to the Cl_2 concentration standard for existing acid regeneration plants that allows the owner or operator to request approval for a source-specific standard based on the maximum design temperature and minimum excess air that allows production of iron oxide of acceptable quality. The owner or operator must establish the source-specific Cl_2 standard using procedures specified in the final rule.

The provision in the proposed rule that owners or operators of new or reconstructed hydrochloric acid regeneration plants to request approval for a source specific Cl_2 concentration standard is removed. Upon reconsideration, this provision is not consistent with the statutory requirement that all new sources are to achieve the new source MACT numerical limit. The expectation is that owners and operators are to design and construct new sources capable of meeting the standard.

For pickling lines, the concentration option has been placed ahead of the collection efficiency option to reflect the expectation that the concentration option will be the one most likely exercised. The intent to make either option equally acceptable has not changed.

TABLE 1.—EMISSION STANDARDS FOR AFFECTED SOURCES

Affected source	Emission standard
Pickling line:	
Existing	HCl concentration in air pollution control device or process exhaust gas no more than 18 parts per million by volume (ppmv) or Air pollution control device minimum HCl collection efficiency of 97%.
New	HCl concentration in air pollution control device or process exhaust gas no more than 6 ppmv for continuous lines and 18 ppmv for batch lines or Air pollution control device minimum HCl collection efficiency of 99% for continuous lines and 97% for batch lines.
Hydrochloric acid regeneration plant:	
Existing	HCl concentration in air pollution control device or process exhaust gas no more than 25 ppmv and Cl_2 concentration in air pollution control device or process exhaust gas no more than either 6 ppmv or a source-specific maximum concentration limit.
New	HCl concentration in air pollution control device or process exhaust gas no more than 12 ppmv and Cl_2 concentration in air pollution control device or process exhaust gas no more than 6 ppmv.

TABLE 1.—EMISSION STANDARDS FOR AFFECTED SOURCES—Continued

Affected source	Emission standard
Hydrochloric acid storage vessel: Existing and new	Cover and seal all openings and route emissions to air pollution control device or alternative control system and Use enclosed line or local fume capture system vented to air pollution control device or alternative control system at each point where acid is exposed to atmosphere.

One change was made to the requirements for new or existing acid storage vessels to clarify that a forced ventilation add-on air pollution control device is not the only method allowed for emissions control. The final rule requires that the owner or operator cover and seal all openings on each vessel and route emissions through a closed-vent system to an air pollution control device or alternative device that is capable of reducing or collecting emissions. Acid loading and unloading must still be performed either through enclosed lines or with a local fume capture system, ventilated through an air pollution control device or alternative control device, at each point where the acid is exposed to the atmosphere.

4. Operational and Equipment Standards

A new section on operational and equipment standards has been added. The requirement to operate hydrochloric acid regeneration plants in a manner consistent with good air pollution control practices is highlighted in this new section to define those practices and emphasize their importance. The owner or operator of an acid regeneration plant must operate each affected source at all times while in production mode in a manner that minimizes that proportion of excess air fed to the process and maximizes the process offgas temperature consistent with producing usable regenerated acid or iron oxide.

The standards for hydrochloric acid storage vessels have been moved to this new section to reflect the fact that these standards are equipment standards, not numerical emission limits.

5. Compliance Dates

No changes to the proposed compliance dates have been made in the final rule. Under § 63.1160 of the final rule, compliance for existing sources must be achieved no later than June 22, 2001. The owner or operator of a new or reconstructed source that commences construction or reconstruction after September 18, 1997, must achieve compliance by June 22, 1999, or upon startup, whichever is later. As provided under section 112(i)(3)(B) of the Act, the owner or operator may request that the Administrator or applicable permitting authority in a State with an approved permit program grant an extension for 1 additional year if necessary to install controls.

6. Maintenance Requirements

The owner or operator must develop and implement a written operation and maintenance plan for each emission control device that is consistent with good maintenance practices. For a wet scrubber emission control device, the written plan must, at a minimum, include the actions described in § 63.1160(b)(2)(i) through § 63.1160(b)(2)(iv)(E) of the final rule. The plan is no longer required to be submitted to the applicable permitting authority, but it is required to be incorporated by reference into the source's title V permit.

An additional maintenance requirement is to monitor and record the pressure drop across the scrubber once per shift to identify changes that may indicate a need for maintenance.

If corrective action is required, the owner or operator is allowed 1 working day in which to initiate procedures to correct the problem. Initiation of procedures is defined to be completion of the first applicable step or item in the maintenance plan. Required repairs must be completed as soon as practicable.

Under the proposed rule, a record of each maintenance inspection was required to be signed by a responsible plant official. Under the final rule, the signature authority is assigned to a responsible maintenance official, defined as a person designated by the owner or operator as having authority to sign records and reports required under this rule.

Maintenance rules regarding initiation of corrective action within 1 working day, timely repair, and signing of maintenance records by a responsible maintenance official also apply to hydrochloric acid regeneration plants.

7. Performance Testing and Test Methods

Changes made to the performance test requirements include adding provisions for new wet scrubber operating parameters and deleting the requirement to establish compliant values for pressure drop and scrubber effluent acidity.

Following approval of the site-specific test plan, the owner or operator must conduct an initial performance test for each process or control device to demonstrate compliance with the applicable emission standard. If the owner operator chooses to comply with the collection efficiency standard for a new or existing pickling line, the performance test must measure the mass flows of HCl at the inlet and outlet of the air pollution control device. Inlet and outlet measurements must be performed simultaneously. If the owner or operator chooses to comply with the HCl concentration standard for a new or existing pickling line or is demonstrating compliance with the HCl and Cl_2 concentration standards for a new or existing acid regeneration plant, the performance test must measure the concentration of HCl and, for hydrochloric acid regeneration plants, Cl_2 in the gases exiting the process or the air pollution control device. Compliance with the applicable standards is determined by either the average of three consecutive sampling runs or the average of any three of four consecutive runs. Each run must be conducted under conditions representative of normal process operations. Sampling point locations must be determined according to EPA Method 1, and stack gas conditions must be determined, as appropriate, according to EPA Methods 2, 3, and 4 in 40 CFR part 60, appendix A. An exception to Method 1 is made in that no traverse point shall be within one inch of the stack or duct wall. The final rule requires EPA Method 26A to determine compliance with the HCl and total chloride emission limits. As allowed by § 63.7(f) of the NESHAP general provisions in 40 CFR part 63, subpart A, the owner or operator may use equivalent alternative test methods

subject to approval by the Administrator. The EPA does not delegate authority for this determination.

If a wet scrubber is the air pollution control device, the owner or operator must monitor the makeup water flow rate and, for scrubbers that operate with recirculation, the recirculation water flow rate during each run to establish site-specific operating parameter values for the minimum makeup water flow rate and the minimum recirculation water flow rate. For an acid regeneration plant, the owner or operator must also monitor the process offgas temperature and a suite of parameters necessary to determine the proportion of excess air fed to the process to establish site-specific operating parameter values for the minimum process offgas temperature and the maximum proportion of excess air. The proportion of excess air is determined by a combination of total air flow rate, fuel flow rate, spent pickle liquor addition rate, and amount of iron in the spent pickle liquor or by any other combination of parameters approved by the Administrator. Compliant operating parameter values are determined as the averages of the values recorded during any of the runs for which results are used to establish the emission concentration or collection efficiency. Alternative compliant operating parameter values may be established based on multiple performance tests. The final rule clarifies that the owner or operator may reestablish operating parameter values for wet scrubbers and acid regeneration plants as part of any performance test (or tests) conducted after the initial performance test.

8. Monitoring Requirements

The proposed monitoring requirements for wet scrubbers were revised to require monitoring of the makeup water flow rate and recirculation water flow rate. Alternative monitoring requirements may be developed subject to approval by the Administrator. Requirements for monitoring the scrubber pressure drop (as a monitoring parameter) and effluent acidity are eliminated. The requirement for installation and operation of continuous emission monitoring systems (CEMS) if excursions of the control device operating parameters occur more frequently than six times during any 6-month reporting period is deleted. Commenters on the proposed rule pointed out that the use of CEMS for this application has not been demonstrated; manufacturers have cautioned that using such devices in acidic conditions with water droplets present would interfere with the test methodology and be corrosive to the testing apparatus.

The requirement for periodic performance tests also is revised. The final rule requires that the owner or operator conduct performance tests for each air pollution control device either annually or on an alternative schedule that is approved by the permitting authority, but no less frequently than every 2½ years or twice per title V permit term.

If a wet scrubber is used as the control device for a pickling line or acid regeneration plant, the owner or operator must install, operate, and maintain devices to measure continuously and record at least once per shift the makeup water flow rate and the recirculation water flow rate while the scrubber is operating. The final rule requires operation of the scrubber such that neither the makeup water flow rate nor the recirculation water flow rate are less than values established during the performance test (or tests). If an excursion occurs (i.e., either operating parameter is less than the allowed value), the owner or operator must initiate procedures to correct the problem within 1 working day of detection of the excursion.

The owner or operator of an acid regeneration plant also must install, operate, and maintain a device to measure continuously and record at least once per shift the process offgas temperature and devices to measure the parameters from which proportion of excess air is determined. The final rule requires that excess air must be determined and recorded at least once per shift instead of at least once every 8 hours while the plant is in production mode, which is in accordance with the original intent of the rule.

The proposed rule inadvertently stated that exceedances of scrubber operating parameters were violations of the emission limit. The intention was to state that exceedances of acid regeneration plant operating parameters were violations of the emission limit. This requirement has been changed so that exceedances of scrubber operating parameters only require initiation of corrective action according to the maintenance plan, and exceedances of acid regeneration plant operating parameters are not violations of the emission limit but instead are violations of the operational standard.

Each monitoring device for scrubbers and acid regeneration plants must be certified by the manufacturer to be accurate to within ±5 percent and be calibrated in accordance with the manufacturer's instructions, but not less frequently than once per year.

Monitoring requirements for acid storage vessels are revised. The definition of closed-vent system now includes provisions to transport emissions back into any device that is capable of reducing or collecting the emissions. Under the final rule, the owner or operator must make semiannual instead of monthly inspections of each vessel to ensure proper operation of the closed-vent system and either the air pollution control device or enclosed loading and unloading line, whichever is applicable. Commenters to the proposed rule pointed out that semiannual inspections would be more consistent with other rules that have similar monitoring requirements.

9. Notification, Reporting, and Recordkeeping Requirements

Only minor changes needed to clarify and accommodate changes in the final rule were made to the proposed notification, reporting, and recordkeeping requirements. Requirements pertaining to CEMS were deleted in the final rule because these monitoring systems are no longer required.

The final notification requirements include, under § 63.9 (b) through (h) of subpart A, one-time notifications of applicability, intent to construct or reconstruct (including anticipated startup date and actual startup date), date of performance test, compliance extension requests, special compliance obligations, and compliance status. The final rule requires that the notification of compliance status include identification of the selected emission limits and the full test report documenting the results of initial performance tests (including all data and calculations used to establish operating parameter values or ranges).

Recordkeeping requirements are established in § 63.10(b) of the general provisions. In addition to these requirements, the standard requires plants to maintain records of information needed to determine compliance. All records must be retained for at least 5 years following the date of each occurrence, measurement, maintenance, corrective action, report, or record. The records for the most recent 2 years must be retained onsite; records for the remaining 3 years may be retained offsite but still must be readily available for review. The files may be retained on microfilm, on microfiche, on a computer, or on computer or magnetic disks.

The final rule incorporates the general recordkeeping requirements in § 63.10(b) of the NESHAP general provisions in 40 CFR part 63, subpart A and requirements for subpart CCC records. The final rule requires records of scrubber makeup water flow rate and recirculation water flow rate, acid regeneration plant process offgas temperature and parameters from which proportion of excess air is determined, manufacturer certification that monitoring devices are accurate to within ±5 percent, and monitoring device calibrations. The owner or operator also must maintain a current copy of the operation and maintenance plan (with any revisions) and records of each maintenance inspection, repair, replacement, or other corrective action (whether for maintenance or an excursion).

Minor revisions in wording were made to retain consistency with the wording of the general provisions to part 63 (subpart A). Referring to the section numbers that apply to the final rule, the following paragraphs were amended: § 63.1164(c), § 63.1164(c)(1), § 63.1165(a)(1), and § 63.1165(a)(2). These revisions do not change the substance or the intent of the rule.

10. Delegation of Authority

The proposed rule specified that authority for approval of an alternative test method and alternative nonopacity emission standards would be retained by the Administrator and not transferred to a State. Authority for approval of monitoring parameters for hydrochloric acid regeneration plants and alternative monitoring requirements for wet scrubbers is also retained by the Administrator because these parameters are fundamental to effective monitoring and cannot be delegated. The Administrator will also retain authority to waive recordkeeping requirements. Authority to approve an alternative performance testing schedule is delegated to the States.

11. Display of OMB Control Numbers

The EPA also is amending the table of currently approved information collection request (ICR) control numbers issued by the Office of Management and Budget (OMB) for various regulations. This separate amendment updates the table to accurately display those information requirements contained in the NESHAP. This display of the OMB control number and its subsequent codification in the Code of Federal Regulations satisfies the requirements of the Paperwork Reduction Act (44 U.S.C. 3501 *et seq.*) and OMB's implementing regulations at 5 CFR part 1320.

The ICR was previously subject to public notice and comment prior to OMB approval. As a result, EPA finds there is "good cause" under section 553(b)(B) of the Administrative Procedure Act (5 U.S.C. 553(b)(B)) to amend this table without prior notice and comment. Due to the technical nature of the table, further notice and comment would be unnecessary.

B. Summary of Impacts

The final standards will reduce nationwide emissions of HAP from steel pickling facilities using the HCl process by 2,200 Mg/yr (2,500 tpy), a 76 percent reduction from current levels. The EPA estimates that 70 steel pickling facilities will be subject to the rule. This estimate excludes any major source speciality steel pickling facilities pending the outcome of a new rulemaking to determine the applicability of the rule to this pickling process.

No significant adverse secondary air, water, or solid waste impacts are anticipated. The amount of water discharged from wet scrubbers would increase by approximately 300,000 cubic meters per year over current levels. The volume of sludge generated by additional control may increase by up to 1,300 Mg/yr (1,400 tpy). Energy use for additional emission control systems is expected to increase by about 6.5 million kilowatt hours per year over current levels.

Nationwide capital costs of the final standards are estimated at $20 million, with annual costs for testing and monitoring of about $1.9 million. The economic impacts are all well below one percent of the cost of production of the steel product and result in no significant adverse impacts on the industry or small entities. No plant closures, regional impacts, or significant employment losses are expected. The economic impact of the rule on the industry as a whole is minor. Additional information on the impacts of the rule is included in the BID.

IV. Summary of Major Public Comments and Responses

The EPA received 15 comment letters on the proposed NESHAP for Steel Pickling Facilities—HCl Process. A copy of each comment letter is available for public inspection in the docket for the rulemaking (Docket No. A–95–43; see the **ADDRESSES** section of this preamble for information on inspecting the docket). The EPA has had followup discussions with commenters regarding specific issues initially raised in their written comments. Copies of correspondence and other information exchanged between the EPA and the commenters during the post-comment period are available for public inspection in the docket for the rulemaking.

The EPA reviewed and carefully considered all comments received. The EPA made changes to the rule where appropriate. A summary of responses to major comments received on the proposed rule is presented below. Additional discussion of the EPA's responses to public comments is presented in the BID.

A. Applicability

Comment: Four commenters requested clarification to show that the rule applies only to facilities that are major sources for HAP, not to facilities that are major sources for criteria pollutants or area sources for HAP.

Response: A revision to § 63.1155 has been made to show the indicated applicability.

Comment: Four commenters requested clarification of the 50-percent HCl criterion proposed as the concentration above which pickling lines were to be subject to the rule. One of the commenters also requested that a *de minimis* HCl concentration be established that excludes rinse tanks.

Response: The EPA has decided to clarify the applicability of the rule by establishing *de minimis* temperature and acid concentration values and is using information cited in the "Metals Handbook, Ninth Edition, Volume 5: Surface Cleaning, Finishing, and Coating," published by the American Society for Metals, which gives temperature and acid concentration ranges for batch and continuous pickling operations using hydrochloric acid (page 69). The lowest hydrochloric acid concentration cited is 6 percent, the lowest temperature is 100 °F. The EPA believes that these values are reasonable *de minimis* values and their establishment constitutes a realistic option to the proposed 50-percent HCl criterion. Most, if not all, rinse tanks would have conditions below these values and would therefore be excluded from the rule.

Comment: Two commenters requested the EPA to address the use of different types of acids in pickling processes. Both noted that the EPA possesses no information on HCl control requirements for processes that use HCl in combination with other acids and cannot verify that data on HCl only operations apply to these processes.

Response: The intent of the rule was to address carbon steel pickling by hydrochloric acid. After the comment period, the EPA received information from operators of two specialty steel

pickling facilities indicating that technology that is effective in collecting emissions from hydrochloric acid pickling of carbon steel may not be as effective in collecting emissions from operations in which specialty steel, such as stainless or electrical steel, is pickled, typically using other acids such as sulfuric acid in combination with hydrochloric acid. The EPA has consequently decided that the standards developed for carbon steel pickling cannot be applied to specialty steel pickling and therefore has clarified the rule to limit its applicability to carbon steel pickling. Definitions for carbon steel and specialty steel have been added to § 63.1156 as part of this clarification. These definitions are taken from the publication "Everything You Always Wanted to Know About Steel—A Glossary of Terms and Concepts," edited by M. G. Applebaum, Salomon Brothers Inc., Chicago, 1997. The facility description in § 63.1155 has been changed to "* * * facilities that pickle carbon steel using hydrochloric acid solution that contains 6 percent or more by weight HCl and is at a temperature of 100 °F or higher."

The EPA will determine at a later date if the specialty steel industry should be regulated under this part of the CFR and, if so, whether it will be regulated by amending subpart CCC or under a separate subpart.

Comment: Two commenters recommended that small mobile vessels, which would be expected to produce minimal emissions, not be subject to the rule.

Response: The EPA agrees that small mobile vessels should be excluded from the rule. The definition of acid storage vessel is modified to read "* * * a stationary vessel used for the bulk containment of virgin or regenerated hydrochloric acid."

Comment: One commenter believes that the proposed rule will require reconstruction of existing scrubber systems, forcing the process to become subject to new source rules. The definition of reconstructed source should be eliminated.

Response: Changes or additions to air pollution control devices do not constitute reconstruction of the source and are not included in the changes that would make a facility or process subject to reconstruction and modification requirements.

B. Definitions

Comment: As discussed under applicability, changes were recommended that required definitions for carbon steel and specialty steel.

Response: The following definition of carbon steel is added to the rule: "Carbon steel means steel that contains approximately 2 percent or less carbon, 1.65 percent or less manganese, 0.6 percent or less silicon, and 0.6 percent or less copper."

The following definition of specialty steel is also added to the rule: "Specialty steel means a category of steel that includes silicon electrical, alloy, tool, and stainless steels."

Comment: Two commenters requested to clarify the definition of control devices for acid storage vessels to avoid the possible interpretation that emissions would have to be routed to a control device of the type used to control pickling or acid regeneration emissions.

Response: The intent of the proposed rule was to allow any device that reduces HCl emissions to the atmosphere. For clarification, the definition of closed-vent systems was changed to include "* * * any device that is capable of reducing or collecting emissions."

Comment: One commenter recommended that reports required by this rule should only require certification by an inspector who has intimate knowledge of the system and not necessarily by a "responsible official" as defined in subpart A, § 63.2.

Response: The EPA agrees and is allowing facilities to designate a "responsible maintenance official" to have signature authority. This official is defined as "* * * a person designated by the owner or operator as having authority to sign records and reports required under this rule."

Comment: Five commenters believe that the proposed definition of steel pickling is too broad and have requested the EPA to clearly distinguish between pickling and other operations, and have offered suggestions for modifying the definition of pickling.

Response: The EPA agrees that the definition of steel pickling should be crafted to avoid misinterpretation. The commenters' suggestions are incorporated to the extent considered appropriate. The definition of steel pickling, with changes underlined, is modified to mean "* * * the chemical removal of iron oxide mill scale that is formed on steel surfaces during hot rolling or hot forming of semi-finished steel products through contact with an aqueous solution of acid where such contact occurs prior to shaping or coating of the finished steel product. This definition does not include removal of light rust or scale from finished steel products or activation of the metal surface prior to plating or coating."

Comment: One commenter believes that rinse tanks should be excluded from the definitions of batch and continuous pickling lines. The rule implies that an air pollution control device would be required for these tanks.

Response: The rule is meant to include all ventilated tanks that are part of a steel pickling process to which the rule applies, which may include some rinse tanks. The rule does not require installation of ventilation systems not previously installed.

C. Emission Standards

1. Pickling Lines

Comment: Five commenters stated that the EPA did not base the standards on the best performing 12 percent of sources. The language in the Act directs the EPA to derive numerical limits for new sources from the best performing scrubbers for a given option, but EPA used this approach in deriving existing source standards. The EPA only considered 10 of the 152 existing continuous pickling lines (7 percent), then used only four of the ten available data sets and determined the concentration limit from only two data sets. The EPA has not justified not using all data sets. The averages of all ten tests, 29.3 ppmv and 97.3 percent, are more representative of the actual variation in the test data which could be expected for properly controlled sources and should be the basis for the limits.

Response: As explained in the preamble to the proposed rule, the EPA based the MACT floor on technology. In determining MACT, the EPA considered alternative approaches for establishing the MACT floor; these include (1) information on State regulations and/or permit conditions, (2) source test data that characterize actual emissions discharged by sources, and (3) use of a technology floor and an accompanying demonstrated achievable emission level that accounts for process and air pollution control device variability. No Federal air emission standards currently apply to steel pickling or acid regeneration sources, and existing State standards cannot be directly related to the requirements of this rule. Applicable test data are only available from 10 of 152 continuous pickling lines. These data points are too few to establish 12 percent MACT floors based on actual releases. By comparison with the limited utility of State regulations and source test data, a substantial body of information is available on the types, configurations, and operating conditions

of air pollution control devices applied across the industry. The EPA therefore used the technology floor approach to establishing MACT for pickling lines. Details of this approach are discussed in the preamble to the proposed rule.

The characteristics of the scrubbers constituting the existing source and new source levels of control were determined by evaluating the results of emission tests conducted on units currently employed in the industry. Data from pickling lines controlled by devices of these descriptions were used to represent the capabilities of MACT for this application. The EPA determined the standards from these data, as discussed in the comments and responses below.

Comment: Two commenters stated that the standards are unnecessarily stringent in that they do not reflect what long term performance is achievable on a continuous basis considering natural process and control device variations. One commenter submitted data showing a wide variation in HCl emissions over a 3-year period from one facility using the same control technology where no known malfunctions occurred to cause the variation. Data from this facility consisted of nine tests, with average measured HCl concentrations ranging from 0.4 to 178 ppmv. This commenter also stated that data presented in the EPA BID also illustrate a wide variation in HCl emissions between and within facilities. Using a statistical argument based on standard deviations in data, the standard should be at least 15 ppmv for new sources and 35.8 ppmv for existing sources, according to this commenter. One commenter believes that inaccuracies of the sampling methods do not permit setting an emission standard as low as that proposed.

Response: The EPA is not required to use a specific statistical procedure in arriving at values for emission standards. The commenter's facility's nine tests are comprised of seven tests for which all data points, including individual sampling runs, are within a 13 ppmv concentration limit. The remaining two tests have averages that are about 19 and 37 times the average of the other seven tests. The EPA believes these two tests cannot be the result of normal air pollution control device operation during normal process operation.

Regarding accuracy of sampling, this issue is discussed in section E below. The EPA believes that the test method is sufficiently accurate for the proposed emission standards for new and existing facilities.

Relative to the broad issues of stringency and achievability of the proposed standards, the EPA agrees with the commenters in that the data used to determine the numerical limits are sparse and that variations in operations and in test results should be considered. The numerical limit determination was therefore reexamined. The EPA conducted a thorough review of the scrubber design and source test data base used to develop the pickling standard. Details of this review are given in the BID. Data from all tests, including those with only one or two sampling runs, were examined primarily in regard to variability in individual test run results. The data were considered separately for new and existing source MACT.

Performance of the scrubbers used as the basis for new source MACT was considered on the basis of long term performance and variability in individual sampling runs. All three scrubbers served continuous pickling lines. The average outlet HCl concentrations were 1.6, 2.1, and 7.7 ppmv, with corresponding average HCl collection efficiencies of 99.5, 99.96, and 99.0 percent, respectively. Thus, on the basis of average performance, all three scrubbers meet the proposed new source standard for collection efficiency of 99 percent, and two meet the proposed new source standard for outlet concentration of 3 ppmv. The worst results of individual sampling runs for these scrubbers were HCl outlet concentrations of 5.9, 3.5, and 7.7 ppmv, with worst results for HCl collection efficiencies of 97.6, 99.94, and 99.0 percent, respectively. On this basis, two scrubbers meet the proposed collection efficiency standard but no scrubber meets the proposed concentration standard. To accommodate the uncertainty in sampling, particularly in determining outlet concentration at these low levels, the EPA decided to consider a new source standard for outlet concentration that could be met by the new source MACT scrubbers that did not meet the collection efficiency standard. This concentration is 6 ppmv HCl, which is 5.9 rounded up to the nearest whole number. Based on the worst individual sampling run results, all three scrubbers meet at least one of the two alternative standards; one scrubber meets both the concentration standard of 6 ppmv and the collection efficiency standard of 99 percent, one meets the concentration standard, and one meets the collection efficiency standard. New source standards of 6 ppmv maximum outlet concentration and 99 percent minimum collection efficiency are therefore promulgated for continuous pickling lines.

Performance of the scrubbers used for the basis of existing source MACT for continuous pickling lines was also considered on the basis of individual sampling runs. As discussed in the preamble to the proposed rule, the concentration and collection efficiency standards were derived from the scrubbers that were the better performers in each respect. Three units produced outlet HCl concentrations of 1.7, 8.0, and 13 on the averages, 2.7, 15, and 18 ppmv for the worst runs; all the others produced HCl outlet concentrations of 42 ppmv or higher on the averages, 70 ppmv or higher for the worst runs. The concentration standard was therefore determined to be 18 ppmv HCl from the performance of these three scrubbers. On the basis of HCl collection efficiency, the seven scrubbers used as the basis for existing source MACT performed with average efficiencies of 98.1, 97.8, 97.5, 97.0, 96.8, 94.7, and 92.7 percent. Worst run efficiencies were 97.5, 96.8, 96.7, 96.6, 95.9, 94.1, and 92.1 percent. With efficiencies rounded off to the nearest percent, four of the seven scrubbers would meet a standard of 97 percent. Of the remaining three scrubbers, one is a marginal performer and two poor performers by comparison with the first four. The HCl collection efficiency standard of 97 percent was determined from the performance of the best four scrubbers. Five of the seven scrubbers meet at least one of the alternative standards.

Comment: Two commenters questioned the rationale of using data from the best performing scrubbers to establish separate collection efficiency and concentration limits because each owner or operator would have two options. The logic ignores the statistical ability of scrubbers to comply with the proposed standard continuously and the very basis for proposing alternative standards in the first instance. The EPA "proposed alternative standards out of the recognition that facilities with high HCl inlet concentrations could not meet the low HCl outlet concentration standard, and vice versa. Deriving the MACT standards from the best scrubbers for each option disregards the fact that the MACT floor is supposed to represent the average of the best 12 percent and those facilities that have HCl inlet concentrations too low to comply with the proposed collection efficiency impossible and too high to comply with the proposed 10 ppmv standard."

Response: The EPA disagrees with the commenters. The commenter's logic

expressed above is itself not clear. The fact that the standard is not based on a statistical average has been discussed previously. The assumption of the final standards is that at least some devices will not be able to meet both options but all would be able to meet one or the other. Therefore the numerical limits for each option were developed separately.

Comment: Two commenters stated that the EPA has not sufficiently justified its MACT determination for batch pickling lines. The rulemaking record contains no data specific to batch pickling. Batch pickling lines are significantly different from continuous lines in terms of design, operation, air capture rates, inlet concentrations, hood design, product handling, and volume throughput rates. In light of these differences, the absence of test data from batch lines, and limited data from continuous lines, it may not be appropriate for EPA to simply borrow and apply its MACT determination for continuous lines to batch operations.

If EPA promulgates this rule prior to supporting its MACT determination, batch picklers will be in the position of not knowing if they can meet the standards until they have spent the money to install or upgrade their pollution control equipment. The EPA would be prudent to delay implementation of the proposed rule until it can demonstrate, based on batch pickling-specific data, that the proposed standards do in fact constitute MACT.

Response: The commenters state that there are significant differences between batch and continuous pickling lines but do not give details nor any indication of how air pollution control requirements are different. The commenters do not express any technical considerations that have not already been addressed. Differences in fume capture systems between batch and continuous operations, for example, are discussed in detail in chapter 4 of the proposal BID. However, the effectiveness of the air pollution control system is based on the characteristics of the gas stream, not the capture system. According to scrubber manufacturers and designers, scrubber design considerations are the same for both types of operations. The major difference between batch and continuous operations is that the HCl concentration in batch line offgases varies during different phases of the operating cycle. For example, the concentration can increase when steel is raised out of the tank and allowed to drain before it is rinsed. Scrubbers can be designed on the basis of the maximum concentration experienced.

Regarding the ability of batch operations to meet the same standards as continuous operations, the EPA notes the view expressed by two commenters, one with extensive relevant experience, that the proposed standards are reasonable and can be attained with available control equipment. These comments are presented in the BID.

After the comment period, the EPA received emission data from a batch pickling operation in which the outlet gas was sampled in three runs of 1 hour each; HCl concentrations were 5.1, 4.2, and 3.6 ppmv. The only other information available for batch operations is from a test at another facility in which only one sampling run, of 1 hour duration, was conducted on the scrubber outlet. A concentration of 6.3 ppmv HCl was measured. Results of these two tests give some indication that HCl emission control for these processes at levels achieved for continuous pickling lines is possible.

Based on these considerations, the EPA believes that control of batch pickling lines at the level of existing source standards is achievable. However, the EPA agrees with the commenters to the extent that control of batch lines at the new source standard level is less certain. Because no clear limitation for new batch pickling lines could be determined from the available information, particularly in considering the variation in operating conditions and ventilation system design, the rule is revised to make the new source standard for batch pickling the same as the existing source standard.

2. Hydrochloric Acid Regeneration Plants

Comment: One commenter disagreed that sufficient source test data were available to provide a basis for the MACT floor. The EPA evaluated five measured scrubber outlet concentration values, then noted that one value was far out of line with the others and did not consider this value in establishing the floor. No attempt to review the next appropriate value was made by EPA. Constructing a fifth data point in lieu of actual data has no technical or regulatory basis under section 112 of the Act. The EPA should have used another facility's actual test data or conducted additional tests to establish a fifth point.

A second commenter observed that the MACT floor on which EPA bases its standard is not representative of single stage water scrubbing. Caustic scrubbing technology, contrary to EPA's belief, has been shown to be more effective in reducing HCl emissions than scrubbing with unneutralized water. The EPA notes in the proposed rule that no single stage scrubber has demonstrated the capability of meeting the proposed existing source standard of 8 ppmv HCl. The EPA should consider the cost impacts to the industry for waste water treatment and sludge disposal if the standard is to be based on caustic scrubbing.

A third commenter provided additional data from the two acid plants that use two stage scrubbing. Details are presented in the BID. The data include outlet concentration data for the first stage water scrubbers. These data are from tests conducted on both plants in April 1994, March 1996, and November 1996. All tests except for two consisted of three sampling runs of 3 hours each using EPA Method 26A; the remaining two tests consisted of two sampling runs. Average HCl concentrations in the first stage water scrubber outlet gas for one plant vary between 5.6 and 20 ppmv, with the highest concentration measured for an individual run of 25 ppmv; average HCl concentrations for the other plant vary between 11.2 and 23 ppmv, with the highest concentration measured for an individual run of 31 ppmv.

Response: The EPA agrees with the first commenter in that the method used to determine the proposed floor was not appropriate, specifically, the manufacturing of a fifth data point in lieu of having actual data followed by averaging. Furthermore, the EPA agrees with the suggestion of the second commenter that the proposed existing source standard of 8 ppmv HCl is not demonstrated to be achievable with single stage water scrubbing, the predominant control technology used in the industry.

The floor has therefore been reexamined on the basis of the median of the best five controlled sources on a technology basis. The best two controlled sources employ either two stage acid recovery or two stage scrubbing, with neutralized water used in the last scrubbing stages in both cases. The third best controlled source employs single stage scrubbing with unneutralized water; this technology is also used by all of the remaining sources in this subcategory. The final standard for existing sources is therefore developed based on the performance of single stage water scrubbing, which addresses the main concern of the second commenter.

With the inclusion of the above information, long term data from two acid regeneration plants are now available. Data from the plant for which the measured HCl concentration was 16 ppmv were still restricted to the one test, which consisted of two sampling

runs with measured HCl concentrations of 15.6 and 15.8 ppmv. The final data point available was 137 ppmv HCl, which is so far out of line with the other data that the plant tested could not be considered well controlled: data from this plant could therefore not be used to establish an emission standard.

In order to determine a numerical concentration standard from all of the available information, process and control system variability over time were taken into account by considering HCl concentration averages and also values for individual sampling runs. On the basis of average outlet concentrations, it seems clear that the first three plants meet a limit of 25 ppmv HCl. Considering all 19 individual runs from the three plants, except for one run of 31 ppmv, all others are 25 ppmv or less. A maximum outlet concentration of 25 ppmv HCl therefore seems reasonable for a standard based on single stage water scrubbing.

Regarding the new source standard for HCl, the additional data discussed above include outlet concentration data from second stage scrubbers that use neutralized water. Data are from four tests conducted between March 1993 and March 1996. In all tests, three sampling runs of 2 or 3 hours were made using Method 26A. Results of the first tests average 49 and 19.6 ppmv HCl; these results are much higher than those from the more recent three tests and apparently do not reflect current operations. Results of the last three tests are average HCl concentrations ranging from 0.9 to 11.1 ppmv, with results of individual runs ranging up to 11.9 ppmv.

The only other HCl concentration data that have not already been discussed are from the plant that employs two-stage acid recovery plus a venturi scrubber that uses neutralized water. Results from only one test are available; the average HCl outlet concentration was 1.0 ppmv.

Considering the capability of a scrubber to meet a long-term standard, results from the first two plants seem more meaningful. These plants clearly meet an outlet concentration HCl standard of 12 ppmv over the most recent three tests based on individual runs. A new source maximum outlet concentration standard of 12 ppmv HCl therefore has been reasonably demonstrated. Consequently, the final standard is a maximum outlet HCl concentration of 25 ppmv for existing sources, 12 ppmv for new sources.

Comment: Two commenters stated that EPA did not demonstrate that its standards for existing and new sources are based on a sustainable level of performance. One commenter stated that there is a wide variation in HCl emissions at different times using the same control technology. This commenter provided additional data at EPA's request to support the statement. Average emissions range from 31 to 470 ppmv and results of individual tests range from 26 to 542 ppmv HCl, with, according to the commenter, no obvious anomalies in the acid regeneration data. The EPA's data illustrate that there is a wide variation between and within facilities. The standard deviation for all data from which EPA determined its standard is 7.2 ppmv, which is far out of range of the proposed limit.

Response: By comparison with data from other facilities, the plant from which the data provided by the above commenter were taken cannot be well controlled in EPA's opinion, particularly considering the extreme range in values between the lowest and highest measurements. Data from this facility are not relevant in determining a standard based on the best performing plants. The issue of sustainable performance is addressed in the previous comment and response.

Comment: Two commenters state that the Cl_2 limit should be based on five sources instead of three. The small sample size probably does not reflect variability at each source. The 4 ppmv limit has not been shown to be continuously achievable. One commenter states that the existing source emission limits should be determined from the average of five facilities plus two standard deviations; the standard should be at least 74.3 ppmv. For new sources, the standard should be 60 ppmv based on two standard deviations from the mean of EPA's data. The other commenter did not recommend specific standards but provided additional data at EPA's request.

Response: As discussed under the HCl numerical standard, the standards for hydrochloric acid regeneration plants are being revised. The existing source standard is based on technology, which is single stage water scrubbing. As in the case of the HCl standard, the Cl_2 numerical standard was reconsidered based on the body of data available for this technology.

The data provided by the second commenter included results of the three tests discussed above, conducted between April 1994 and November 1996, of outlet Cl_2 concentrations from first stage water scrubbers. Average Cl_2 concentrations are between 0.4 and 5.1 ppmv with the exception of a measurement of 9.9 ppmv from one test conducted in 1994. Results of the more recent tests on this plant were 0.4 ppmv in each case. Excluding this one test, which is assumed to be not representative of current operations, average Cl_2 concentrations range from 0.4 to 5.1 ppmv. Results of all 13 individual runs, except for one value of 7.3 ppmv, range from 0.3 to 5.6 ppmv.

In addition to the data discussed above, Cl_2 outlet concentration data from other facilities are 3.3 and 60 ppmv, each based on one test. The 60 ppmv value is so far out of line with the others that it cannot be considered representative of effective operation and therefore cannot be used in determining the standard.

Considering all of the data, it appears that a limit of 6 ppmv Cl_2 can be met by these operations, considering the variability in measurements (except for the one nonrepresentative value); only one sampling run gives a higher result (7.3 ppmv). The concentration standard for Cl_2 is therefore revised to 6 ppmv for existing sources.

Regarding the standard for new sources, the EPA is required to set the standard according to the capabilities of the best controlled facility. The additional data discussed above included results of the four tests conducted between March 1993 and March 1996 on the outlets of second stage scrubbers that use neutralized water. Results are similar to those for the first stage water scrubbers. Average Cl_2 concentrations range from 0.4 to 5.3 ppmv, with results of individual runs ranging from 0.1 to 7.1 ppmv. An individual plant cannot be identified that provides better performance than existing source MACT. The new source standard for Cl_2 is therefore the same as the existing source standard, 6 ppmv.

Comment: One commenter supported the optional Cl_2 standard to be established for each source.

Response: The optional standard is retained for existing sources but removed for new sources, as discussed above.

3. Acid Storage Vessels

Comment: Two commenters believe EPA should clarify that "control devices" for storage vessels are not a specific control technology, and that facilities can use any method that is demonstrated to minimize emissions to the atmosphere (e.g., bubbling through a drum or small vessel of caustic solution or water).

Response: The EPA agrees with this commenter. No specific control device is required for storage vessels. The definition of closed-vent system is reworded to make the EPA's intention

clear. Examples of devices that might be used include systems that bubble emissions through a small tank of water or caustic without the aid of a fan. However, larger facilities may find it advantageous to route emissions from storage vessels or an acid regeneration plant to a pickling line scrubber or to build a separate scrubber system for control.

4. Assessment of HCl as a Threshold Pollutant Under Section 112(d)(4)

Comment: After the close of the comment period on the proposal, EPA received a letter from a trade association requesting that the Agency assess HCl emissions from steel pickling under section 112(d)(4) of the Act, to determine whether Federal controls on these emissions were necessary, based upon relevant exposure and ecological assessments and a determination in an earlier EPA **Federal Register** notice that HCl was a "health threshold pollutant."

Response: As requested by the commenter, EPA is currently conducting an assessment of HCl emissions from steel pickling operations to determine first whether the Agency would be justified in invoking its section 112(d)(4) authority for steel pickling, and second whether EPA believes it is appropriate to do so, if justified. The EPA does not have adequate information at this time to support development of a standard for the steel pickling source category that may be less stringent than the "floor"-based standard in today's final rule.

Possessing insufficient information at this time to make a decision for the steel pickling source category pursuant to section 112(d)(4) authority, and recognizing that the authority bestowed by Congress is fully discretionary, EPA believes that it is reasonable to finalize today's standard while continuing to conduct an assessment of HCl emissions from steel pickling operations under section 112(d)(4). Absent such information, EPA believes that there is ample reason to regulate HCl emissions from steel pickling operations at the levels of today's standard, as discussed more fully in the remainder of this preamble.

D. Compliance Dates and Maintenance Requirements

Comment: One commenter stated that the required maintenance activities should be guidelines and not requirements. They do not further the rule (beyond required monitoring) to limit emissions and assure compliance with the limits.

Response: Operational and maintenance requirements are necessary to help ensure that emission control equipment continues to operate at a level consistent with its operation at the time of compliance testing and are enforceable independently of emissions limitations. The EPA's statement of these requirements is in 40 CFR 63.6(e)(1)(iii), Operation and Maintenance Requirements.

Comment: Three commenters stated the following. The EPA's maintenance plan should not establish specific elements of the required maintenance plan, i.e., following manufacturer's recommended maintenance, cleaning scrubber internals and mist eliminators at intervals sufficient to prevent fouling, having set intervals for inspecting system components to identify, repair, or replace as needed. Two of the commenters recommend that EPA amend proposed § 63.1159 by eliminating the requirement that maintenance plans must include the elements set forth at § 63.1159(b)(2)(i)–(iv): these elements should be included only as potential elements that may be included in the plan. Another commenter believes that the operation and maintenance plan should not require strict adherence to the manufacturer's operating manual. Many manufacturer's manuals contain steps that are determined not be necessary and/or that only the manufacturer's proprietary products should be used. The EPA should change the wording to, for example, "substantially include" the elements set forth in the manufacturer's operating manual.

Response: The EPA has reviewed the proposed maintenance plan requirements and decided that revisions are appropriate. Manufacturer's instructions for older equipment may require materials no longer available. Manufacturers may no longer be in business so that required parts or materials cannot be purchased except by substitution from a source other than the original manufacturer. Therefore, the EPA has revised the rule so that it no longer requires adherence to the manufacturer's manual. The facility must write an operation and maintenance plan that is consistent with good maintenance practices and includes, at a minimum, the list of items described in the rule. The EPA believes that inclusion of these items is reasonable. Additionally, pressure drop must be monitored once per shift as a means of discovering scrubber operational anomalies that may require maintenance. No specific pressure drop deviation limit is required, but the monitoring records are required to be kept along with the recycle and makeup water flow rates.

Comment: Three commenters stated that the operation and maintenance plan should not be part of the source's title V operating permit. Plan approval places a substantial burden on permitting authorities. The details of these plans are frequently changed as operational problems are addressed. Such a requirement could cause administrative nightmares if a source is required to go through the title V permit modification process every time it modifies a plan, especially during the early stages of the rule. Approval of plans by informal action would encourage timely revision.

Response: The rule requires the plan to be incorporated into the permit only by reference and no longer requires it to be submitted to the permitting authority.

Comment: One commenter believes the requirement that the "responsible plant official" sign records of inspections is overly burdensome. The requirement is acceptable if "responsible plant official" means that an employee delegated the responsibility by the "responsible official" must sign.

Response: The EPA agrees with the commenter and has added the definition "responsible maintenance official," who is a person having signature authority for signing reports required under the rule.

Comment: One commenter states that the requirement to initiate repairs within 1 day is excessive and unworkable. It is unclear what "initiate corrective action" means. In some cases, corrective action may require engineering analysis to determine the source of the problem and effective corrective action. If this provision is retained, the commenter recommends that it be written as a requirement that repairs begin promptly and provide a "safe harbor" that repairs commenced within 1 day are considered to be prompt.

Two commenters state that the proposed requirement that maintenance plans be implemented within 1 working day is too stringent. There may be situations when initiating the plan within 24 hours would be impractical or impossible. In some cases, a facility may have to rely on an outside contractor to conduct necessary action. Instead of establishing a time-specific deadline, the EPA should provide that "facilities must initiate corrective action as soon as practically possible, but no later than 3 working days."

One commenter states that the requirement for corrective action within 1 day of detection of an operating problem with a control device is neither

reasonable or in keeping with the notification and repair requirements of other NESHAP rules. The commenter recommends that the requirement be changed to include a first attempt at repair within 5 working days of detection.

Response: The EPA believes that it is reasonable to expect operators to initiate procedures toward corrective action within 1 day and complete repairs or maintenance as soon as practicable. Initiation of procedures may consist of notification of a contractor or service group that corrective action is necessary. The rule is revised to clarify that the procedures to be initiated are the actions that are specified in the maintenance plan.

E. Performance Testing and Test Methods

Comment: One commenter stated that establishment of site specific scrubber operating parameters as a measure of compliance without first establishing the relationship between the parameters and the emissions in question is not appropriate. The EPA has made no attempt to establish any relationship between the proposed mandated parameters and actual emissions. This information was not evaluated during the MACT development; therefore, site specific parameters should not become mandated compliance parameters.

Response: Without implementation of continuous emissions monitoring systems, monitoring of relevant operating parameters in combination with routine and preventative maintenance is essential to enhanced compliance assurance. The requirement for operating parameter monitoring is retained in the rule.

Comment: One commenter stated that in setting parameter operating limits, the full range of values observed during a compliance test should be used, not the average. Because an average is being established, at least one of the tests must necessarily be above the average if all three tests are not identical. Another commenter believes that owners and operators should be able to establish compliant operating parameters using individual runs from compliance tests and not be restricted to multiple tests. Using multiple runs during a test will greatly diminish costs and repetitive sampling without substantially diminishing the assurance of compliance.

Response: The EPA agrees that some flexibility in establishing operating parameter compliant values is appropriate. The rule is revised to allow an average parameter value measured during any of the runs used to demonstrate compliance to be used as the compliant value rather than the average value measured over the entire testing period.

Comment: Two commenters believe operators should have the option of conducting compliance demonstration tests as needed to show appropriate ranges of scrubber parameters. Establishment of parameters should not be limited to the initial performance test.

Response: The rule allows facilities to conduct multiple performance tests to establish alternative compliant operating parameter values and to reestablish compliant values during any performance test conducted after the initial performance test.

Comment: Two commenters expressed concerns that actions such as installing a more effective capture system or adding a mist eliminator would result in increased pressure drop and hence a violation of the standard.

Response: This issue is no longer a concern because the monitoring parameters have been changed. Pressure drop is now monitored only to detect potential problems with the scrubber.

Comment: Two commenters had the following statement. Method 26A is not validated for steel pickling, only for municipal waste incinerators (MWI). The MWI have higher temperatures, less moisture (and no liquid droplets), and no ferric chloride content, which could interfere with test results. The EPA's tests also show variations of as much as 700 percent for the same pickling line. Test bias may have resulted in an improperly low standard. Inexplicable negative biases are reported in an EPA municipal waste incinerator validation report for Method 26A. These biases are such that validation for pickling sources is required.

The practical level of quantification (PLQ) for Method 26A has not been established for pickling sources, and should be developed using Method 301. Also, ferric chloride might cause a positive bias for the HCl measurements. One facility believes that conditions encountered with HCl pickling tests include high humidity in the gas stream; extremely high solubility of HCl gas in water, condensation in the gas stream, refluxing in the stack, and the use of stack tip entrainment eliminators. These conditions lead to several measurement problems, all of which tend to bias results toward improperly high HCl concentration because of enriched droplet capture in the sampling probe or maldistribution of HCl with regard to sampling probe location. Sampling data show six cases in which the range of measured maximum concentrations varies from 1.3 to 9.3 times the minimum concentration for heated pickling lines or acid regeneration plants. They recommend that the testing protocol include provisions for testing control devices (including stack-tip mist eliminators) and allow for discard of test results more than 50 percent above the average.

Response: The comments do not bring up any technical concerns regarding measurements at pickling or acid regeneration sites. A well designed and conscientiously run field validation of Method 26A specifically at these source categories would not likely uncover any evidence that there is a problem in this application. The EPA knows from its studies that the method is capable of measuring to fractional ppmv levels. Review of data from a 1997 study at a light-weight aggregate kiln burning hazardous waste provides a minimum detection limit estimate of about 0.04 ppmv. The EPA estimated the method precision (reported as the standard deviation of individual runs) to be 0.42 ppmv at 3 ppmv. This value would lead to the precision estimate of the mean of a 3 run test of 0.24 ppmv. If water droplets are routinely present, then the method has to be followed carefully to avoid gathering poor quality data. The EPA has not knowingly field validated the method in the presence of water droplets, but isokinetic sampling is the accepted way to address this problem.

The commenters contended that EPA provides no justification to the preamble statement "EPA considers the method is equally valid for measuring emissions for pickling and acid regeneration sources." They go on to say that HCl pickling emissions are generally 100 to 200 °F and contain water droplets. The presence of water droplets increases the potential for negative bias.

The EPA responds that the method is validated at a municipal waste combustor (MWC) where the sample matrix is a more severe test of the method in terms of potential chemical interferents, and the stack is at a higher temperature. The higher stack temperature at MWCs is a more severe test of the method in that the probe and filter temperatures are less than the stack temperature, which, in theory, could lead to condensation of HCl in the probe. An effective control system would be expected to include a mist eliminator, thus minimizing the potential for excessive water droplet effect. In addition, the test method has provisions to overcome the potential negative bias encountered if water droplets are present.

One commenter also commented on the MWC validation being done with

midget impingers rather than the large impingers. The EPA report No. 600/3-89/064 concludes that there is an inexplicable negative bias compared to those using midget impinges. The most likely cause of the low bias at low (3 to 4 ppmv) concentrations is absorption of HCl on alkaline particulate matter collected on the filter. This condition is not expected at steel pickling plants and, hence, field validation would not be of value.

The commenter also stated that proper field validation of Method 26A would provide the true PLQ that would take into account the normal variations resulting solely from the test procedures. Determining the actual PLQ of Method 26A on HCl pickling emissions is essential to ensure that the final NESHAP limitations are not set lower than the level that can be consistently quantified by the required testing. The recommendation already discussed in this comment should also apply to HCl regeneration plants since the limit of 3 ppmv HCl is at the lower limit of the range tested.

The EPA notes that the commenter provided the Method 301 definition of PLQ. There is general agreement that the intent of the Method 301 calculation procedure of 10 times the standard deviation should use the standard deviation at or near the limit of detection. (The actual Method 301 language adds "* * * at the blank level.") The EPA believes the commenter cites an erroneous conclusion from a Rigo and Rigo Associates, Incorporated, document, that a recent quad-train study at an MWC had a PLQ of at least 125 ppmv at 7 percent oxygen for Method 26A. The study was done in a concentration range of 105 to 636 ppmv at 7 percent oxygen, instead of near the acceptable blank limit of the method. These conditions lead to an inflated standard deviation estimate and a subsequent over estimate of the PLQ. Draft results from a 1997 EPA study using a quad-train arrangement at a light-weight aggregate kiln where the actual (uncorrected for dilution) stack concentration of HCl ranged from 0.22 to 1.29 ppmv (more closely approaching the theoretical lower limit of the method) results in an estimated method standard deviation of 0.12 ppmv at zero. The EPA used these data to extrapolate an estimated method standard deviation of 0.42 ppmv at 3 ppmv as described above. This value compares favorably with the original MWC validation report's estimate of standard deviations of 0.24 ppmv and 0.49 ppmv at concentration of 3.9 ppmv and 15.3 ppmv, respectively.

Regarding positive bias caused by ferric chloride, it would have to have a significant vapor pressure at the filter temperature to pass through the Teflon matte filter in the test equipment. This is not the case.

The EPA believes the test method is appropriate for steel pickling and acid regeneration operations and will continue to require its use (or an approved substitute) for the standard. However, in order to reduce the possibility of collecting water droplets from the stack walls that may be present because of refluxing in the stack or high humidity, the EPA believes that Reference Method 1 should be modified for this application to specify that no sampling point be closer to the stack wall than one inch.

Comment: One commenter states that ammonia is commonly used as a precipitating agent in waste HCl, resulting in ammonium chloride formation. The commenter believes that some ammonium chloride will be decomposed in the acid regeneration plant roaster, but significant amounts may exit in the waste gas and will be recovered along with HCl in gas cleaning. The commenter is currently investigating the possibility of direct measurement of ammonium chloride in the acid plant scrubbers but does not at present have data to offer. The commenter understands that ammonium chloride can interfere in the measurement of HCl at low levels.

Response: Ammonium chloride is identified as a possible interferent in EPA Reference Method 26A that would be expected to appear as chloride ion and thus be measured as HCl. If an acid regeneration plant cannot meet the standard for HCl, it would have the option of demonstrating that ammonium chloride is present in the waste pickle liquor fed to the plant and seeking relief in the HCl emission limit on that basis. However, the need for relief seems unlikely. Ammonium chloride would not be expected to pass the filter that is required for this method at the filter temperature. Ammonium chloride decomposes from the solid state at 339 °C, which is far above the temperature of 248 °F (120 °C) used for sampling acid regeneration plant emissions.

F. Monitoring Requirements

Comment: Four commenters stated that excessive excursions of operating parameters should not trigger implementation of CEMS. In addition, seven commenters stated that the use of CEMS should not be required. No systems have been demonstrated to have the capability to accurately measure and record compliance for this application. Commercially available systems for monitoring at the proposed levels are expensive, difficult to calibrate and maintain, and not reliable to the level of operation required. Manufacturers have cautioned that using such devices in an acidic application containing water droplets would interfere with the test methodology and be corrosive to the testing apparatus. Conditions of high humidity and acidity make it unlikely that an in situ sensor will ever work.

Response: After reviewing the comments, the EPA agrees that reliable operation of currently available CEMS cannot be assured for this application. At best, inordinately burdensome maintenance and operating procedures would be required. The CEMS requirement is therefore deleted.

Comment: Five commenters stated that pressure drop and acidity are not appropriate monitoring parameters. A relationship between these parameters and scrubber efficiency has not been demonstrated. Given the lack of variation of scrubbing efficiency between caustic solution and clear water, monitoring acidity is questionable. Also, the requirement to measure acidity is vague. Three commenters suggested that parameters other than pressure drop and acidity would be better indicators of scrubber performance. Scrubber water flow rate is a more valid indicator of efficient scrubbing. For packed bed scrubbers, betters parameters are pressure drop, air flow rate, and water flow rate to the top of the packing. For plate scrubbers, pressure drop and visual observation provide assurance of correct operation. Other parameters suggested were fan amps and liquid conductivity.

Response: In considering all of these comments, the EPA concludes that scrubber makeup water and recycle water flow rates are better indicators of scrubber performance than pressure drop and acidity, on the basis that the mechanism for HCl collection is absorption in water, which can be done effectively even with slightly acidic water. The rule is revised, eliminating the requirements for monitoring scrubber pressure drop and scrubbing effluent acidity and replacing them with the requirements to monitor scrubber makeup water flow rate and, for scrubbers that operate with recirculation, recirculation water flow rate. Monitoring of pressure drop is moved from operational requirements to maintenance requirements. Pressure drop must be monitored as a means of discovering scrubber operational anomalies that may require maintenance. No specific pressure drop deviation limit is required, but the

monitoring records are required to be kept in addition to the recycle and makeup water flow rates. Flow rate increases large enough to cause flooding would be considered malfunctions.

Comment: Four commenters stated that facilities should be allowed to develop their own monitoring protocols. The EPA should set forth minimum monitoring requirements and allow facilities to develop site specific protocols that they can justify.

Response: Alternative monitoring options can be approved under § 63.8(b) of the general provisions to this part. This provision is clarified in the final rule.

Comment: Six commenters believe that monitoring of scrubbers should not be required during nonoperating periods such as stoppages for maintenance and repairs.

Response: Periods of stoppage for maintenance and repairs would be covered under the Startup, Shutdown, and Malfunction Plan (SSMP). The rule is revised to clarify that monitoring scrubber parameters is required only while the scrubber is operating. The rule is also revised to clarify that monitoring acid plant operations is required only while the plant is operating in production mode. Discussions with plant operators after proposal have revealed that plants often operate in modes that are designed, for example, to maintain temperature while acid and iron oxide production are temporarily suspended. These operations are conducted under conditions that are not predicted to produce byproduct chlorine.

Comment: Two commenters stated that storage vessel inspections should be changed from monthly to semiannually to be consistent with the requirement under other subpart L NESHAP rules. Inspection of control devices on storage vessels should be conducted at the same frequency as compliance testing on the scrubber.

Response: The reference is to subpart L of part 61, National Emission Standard for Benzene Emissions from Coke Byproduct Recovery Plants. The requirement in subpart L is to monitor connections and seals on each control system that recovers or destroys emissions from process vessels, tar storage tanks, and tar-intercepting sumps. The EPA believes that the requirements for this subpart should not be more stringent than those for rules with similar monitoring requirements and has revised the rule to require semiannual rather than monthly inspections.

Comment: Three commenters stated that annual stack testing is excessive when coupled with parametric monitoring. One commenter recommended that stack testing only be required if the control device is out of range. The other commenters recommended testing no more frequently than every 2½ years or every 5 years.

Response: In lieu of continuous emissions monitoring or other means for determining continuous compliance, enhanced compliance assurance is established in this rule by monitoring of relevant operating parameters in combination with routine and preventive maintenance plus periodic performance testing. Annual testing is typically required in such situations. The EPA believes, however, that some flexibility can be allowed in view of the requirement to also monitor parameters. The rule is revised to allow facilities to conduct performance testing on an alternative schedule that is approved by the applicable permitting authority but no less frequently than every 2½ years or twice per title V permit term.

Comment: Four commenters stated that excursions of control device or acid plant operating parameters should not be considered violations. Out of range measurements should be treated as indicators of potential problems requiring further investigation or corrective action. A strong enough relationship between variations in pressure drop or acidity and HCl emissions has not been demonstrated.

Response: The proposed rule inadvertently stated that exceedances of scrubber operating parameters were violations of the emission limit. The intention was to state that exceedances of acid regeneration plant operating parameters were violations of the emission limit. The rule is revised to state that excursions of scrubber monitoring parameters only require corrective action as specified by the maintenance requirements and are not violations of the emission limit.

Regarding acid plant monitoring parameters, the EPA's policy is that linking excursions of operating parameters to violations of the emissions limit is preferred but is only defensible where a strong correlation between the parameters values and emissions can be demonstrated. The EPA reexamined the appropriateness of the linkage of acid regeneration plant operating parameters with emissions and agrees with the commenters that a strong enough correlation has not been demonstrated. The rule is revised so that excursions of acid regeneration plant operating parameters are a violation of the operational standard and not the emission limit.

H. Recordkeeping Requirements

Comment: One commenter believes that the requirement for maintaining startup and shutdown records is ambiguous, burdensome, and of no environmental benefit. No guidance is provided on what constitutes a startup or shutdown. If required, startup and shutdown should be defined to exclude the normal stopping and starting of the pickling line during its daily operation.

Response: The EPA disagrees that no environmental benefit is gained from keeping startup and shutdown records. These records can be used as an enforcement tool to ensure continued compliance with environmental rules or to show periods of inactivity when, for example, emissions would not be expected to occur.

The EPA agrees that maintaining records of normal daily interruptions in line operations is onerous if not routinely practiced. This is not the intent of the recordkeeping requirement. Each facility writes its own SSMP and therefore can provide specific definitions of normal startup and shutdown versus intermittent stops and starts characteristic of daily operation. However, as part of the SSMP, these definitions are subject to approval by the facility's permitting authority.

Comment: One commenter suggests that for the air pollution control device recordkeeping, startup and shutdown should be defined to include only "abnormal" cases, perhaps periods of a day or more.

Response: As described in the previous response, each facility writes its own SSMP and can define normal startup and shutdown.

V. Administrative Requirements

A. Docket

The docket is an organized file of information considered by the EPA in the development of a rulemaking. The docket is a dynamic file because information is added throughout the rulemaking development process. The docketing system is intended to allow members of the public and industries involved to readily identify and locate documents so that they can effectively participate in the rulemaking process. Along with the proposed and promulgated standards and their preambles, the contents of the docket will serve as the record in case of judicial review. (See section 307(d)(7)(A) of the Act.) The official rulemaking record, including all public comments received on the proposed rule, is located at the address in the **ADDRESSES** section at the beginning of this document.

B. Executive Order 12866: Regulatory Planning and Review

Under Executive Order 12866 (58 FR 51735, October 4, 1993), the EPA must determine if a regulatory action is "significant" and therefore subject to review by the Office of Management and Budget (OMB) and the requirements of the Executive Order. The Executive Order defines "significant regulatory action" as one that is likely to result in a rule that may:

(1) Have an annual effect on the economy of $100 million or more or adversely affect in a material way the economy, a sector of the economy, productivity, competition, jobs, the environment, public health or safety, or State, local, or tribal governments or communities;

(2) Create a serious inconsistency or otherwise interfere with an action taken or planned by another agency;

(3) Materially alter the budgetary impact of entitlement, grants, user fees, or loan programs, or the rights and obligation of recipients thereof; or

(4) Raise novel legal or policy issues arising out of legal mandates, the President's priorities, or the principles set forth in the Executive Order.

It has been determined that this final rule is not a "significant regulatory action" under the terms of the Executive Order and is therefore not subject to OMB review.

C. Executive Order 13045: Protection of Children From Environmental Health Risks and Safety Risks

Executive Order 13045 (62 FR 19885, April 23, 1997) applies to any rule that (1) is determined to be "economically significant" as defined under Executive Order 12866 and (2) concerns the environmental health or safety risk that the EPA has reason to believe may have a disproportionate effect on children. If the regulatory action meets both criteria, the EPA must evaluate the environmental health or safety effects of the planned rule on children, and explain why the planned regulation is preferable to other potentially effective and reasonable feasible alternatives considered by the EPA.

The EPA interprets Executive Order 13045 as applying only to those regulatory actions that are based on health or safety risks, such that the analysis required under section 5–501 of the Order has the potential to influence the regulation. This final rule is not subject to Executive Order 13045 because it is not an economically significant regulatory action as defined by Executive Order 12866, and it is based on technology performance and not on health or safety risks.

D. Executive Order 12875: Enhancing the Intergovernmental Partnerships

Under Executive Order 12875, EPA may not issue a regulation that is not required by statute and that creates a mandate upon a State, local or tribal government, unless the Federal government provides the funds necessary to pay the direct compliance costs incurred by those governments or the EPA consults with those governments. If the EPA complies by consulting, EPA must provide the Office of Management and Budget a description of the extent of EPA's prior consultation with representatives of affected State, local and tribal governments, the nature of their concerns, copies of any written communications from the governments, and a statement supporting the need to issue the regulation. In addition, Executive order 12875 requires EPA to develop an effective process permitting elected officials and other representatives of State, local and tribal governments "to provide meaningful and timely input in the development of regulatory proposals containing significant unfunded mandates."

In compliance with Executive Order 12875, the EPA involved State regulatory experts in the development of the rule. State and local governments and tribal governments are not directly affected by the rule, i.e., they are not required to purchase control systems to meet the requirements of the rule. However, State and local governments will be required to implement the rule; i.e., incorporate the rule into permits and enforce the rule. They will collect permit fees that will be used to offset the resource burden of implementing the rule. Comments were solicited from States and have been considered in the development of the final rule. No comments were received from any tribal government.

Today's rule does not create a mandate on State, local or tribal governments. The rule does not impose any enforceable duties on these entities. Accordingly, the requirements of section 1(a) of Executive Order 12875 do not apply to this rule.

E. Unfunded Mandates Reform Act

Title II of the Unfunded Mandates Reform Act of 1995 (UMRA), Pub.L. 104–4, establishes requirements for Federal agencies to assess the effects of their regulatory actions on State, local, and tribal governments and the private sector. Under section 202 of the UMRA, the EPA generally must prepare a written statement, including a cost-benefit analysis, for proposed and final rules with "Federal mandates" that may result in expenditures by State, local, and tribal governments, in the aggregate, or by the private sector, of $100 million or more in any one year. Before promulgating an EPA rule for which a written statement is needed, section 205 of the UMRA generally requires EPA to identify and consider a reasonable number of regulatory alternatives and adopt the least costly, most cost-effective, or least burdensome alternative that achieves the objectives of the rule. The provisions of section 205 do not apply when they are inconsistent with applicable law. Moreover, section 205 allows EPA to adopt an alternative other than the least costly, most cost-effective, or least burdensome alternative if the Administrator publishes with the final rule an explanation why that alternative was not adopted. Before EPA establishes any regulatory requirements that may significantly or uniquely affect small governments, including tribal governments, it must have developed under section 203 of UMRA a small government agency plan. The plan must provide for notifying potentially affected small governments, enabling officials of affected small governments to have meaningful and timely input in developing EPA regulatory proposals with significant Federal intergovernmental mandates, and informing, educating, and advising small governments on compliance with the regulatory requirements.

The EPA has determined that this rule does not contain a Federal mandate that may result in expenditures of $100 million or more for State, local, and tribal governments, in the aggregate, or the private sector in any one year. The EPA has determined that the total annualized nationwide cost of the final standard is approximately $7.9 million per year, which is well under the $100 million per year threshold. The only costs to State and local governments are those associated with implementing this standard through the permitting process, and those costs are recouped through permit fees. In addition, the EPA has determined that this rule contains no regulatory requirements that might significantly or uniquely affect small governments because it does not impose any enforceable duties on small governments; such governments own or operate no sources subject to these rules and therefore would not be required to purchase control systems to meet the requirements of the rule. Thus, today's rule is not subject to the requirements of sections 202 and 205 of UMRA.

F. Regulatory Flexibility Act

The Regulatory Flexibility Act (RFA) generally requires an agency to conduct a regulatory flexibility analysis of any rule subject to notice and comment rulemaking requirements unless the agency certifies that the rule will not have a significant economic impact on a substantial number of small entities. Small entities include small businesses, small not-for-profit enterprises, and small governmental jurisdictions whose jurisdictions are less than 50,000 people. This rule will not have a significant impact on a substantial number of small entities because it does not impact small entities whose jurisdictions cover less than 50,000 people. Only three of approximately 80 affected facilities in this industry meet the criteria for small businesses. Of these three, one company is expected to meet the standard and one company is projected to be a nonmajor source based on calculations using an emissions estimating model along with information supplied by the firm. It is not anticipated that these two facilities will be adversely impacted by the regulation. The remaining small company employs a scrubber that may meet the emission limitation. If this facility incurs emission control costs, the costs would likely relate to upgrading existing equipment or improved maintenance practices. Any regulatory impacts for this company are not expected to be significant.

G. Submission to Congress and the General Accounting Office

The Congressional Review Act, 5 U.S.C. 801 *et seq.*, as added by the Small Business Regulatory Enforcement Fairness Act of 1996, generally provides that before a rule may take effect, the agency promulgating the rule must submit a report, which includes a copy of the rule to each House of the Congress and to the Comptroller General of the United States. The EPA will submit a report containing this rule and other required information to the U.S. Senate, the U.S. House of Representatives, and the Comptroller General of the United States prior to publication of the rule in the **Federal Register**. This rule is not a "major rule" as defined by 5 U.S.C. 804(2). This rule will be effective June 22, 1999.

H. Paperwork Reduction Act

The information collection requirements in this rule have been submitted for approval to the Office of Management and Budget (OMB) under the Paperwork Reduction Act, 44 U.S.C. 3501 *et seq.* An Information Collection Request (ICR) document has been prepared by EPA (ICR No.1821.02) and a copy may be obtained from Sandy Farmer by mail at OP Regulatory Information Division; U.S. Environmental Protection Agency (2137); 401 M St., SW; Washington, DC 20460, by email at farmer.sandy@epamail.epa.gov, or by calling (202) 260–2740. A copy may also be downloaded off the internet at http://www.epa.gov/icr. The information requirements are not effective until OMB approves them.

The information collection requirements include mandatory notifications, records, and reports required by the NESHAP general provisions (40 CFR part 63, subpart A). These information collection requirements are needed to confirm the compliance status of major sources, to identify any nonmajor sources not subject to the standards and any new or reconstructed sources subject to the standards, to confirm that emission control devices are being properly operated and maintained, and to ensure that the standards are being achieved. Based on the recorded and reported information, EPA can decide which plants, records, or processes should be inspected. These recordkeeping and reporting requirements are specifically authorized by section 114 of the Act (42 U.S.C. 7414). All information submitted to the EPA for which a claim of confidentiality is made will be safeguarded according to EPA policies in 40 CFR part 2, subpart B. (See 41 FR 36902, September 1, 1976; 43 FR 39999, September 28, 1978; 43 FR 42251, September 28, 1978; and 44 FR 17674, March 23, 1979.)

The annual public reporting and recordkeeping burden for collecting this information (averaged over the first 3 years after the effective date of the rule) is estimated to total 23,190 hours based on a total of 70 likely respondents over that period (23.3 per year) at 995 hours per respondent per year. The total annualized cost is estimated to be $1,850,000 per year, with a capital and startup cost of $8,200 per year and an operation and maintenance cost of $7,500 per year (excluding labor hours included in the previous total).

Burden means the total time, effort, or financial resources expended by persons to generate, maintain, retain, or disclose or provide information to or for a Federal agency. This includes the time needed to review instructions; develop, acquire, install, and utilize technology and systems for the purposes of collecting, validating, and verifying information, processing and maintaining information, and disclosing and providing information; adjust the existing ways to comply with any previously applicable instructions and requirements; train personnel to be able to respond to a collection of information; search data sources; complete and review the collection of information; and transmit or otherwise disclose the information.

An Agency may not conduct or sponsor, and a person is not required to respond to, a collection of information unless it displays a currently valid OMB control number. The OMB control numbers for EPA's regulations are listed in 40 CFR part 9 and 48 CFR Chapter 15.

I. National Technology Transfer and Advancement Act

Section 12(d) of the National Technology Transfer and Advancement Act of 1995 (NTTAA) directs all Federal agencies to use voluntary consensus standards instead of government-unique standards in their regulatory activities unless to do so would be inconsistent with applicable law or otherwise impractical. Voluntary consensus standards are technical standards (e.g., materials specifications, test methods, sampling and analytical procedures, business practices, etc.) that are developed or adopted by one or more voluntary consensus standards bodies. Examples of organizations generally regarded as voluntary consensus standards bodies include the American Society for Testing and Materials (ASTM), the National Fire Protection Association (NFPA), and the Society of Automotive Engineers (SAE). The NTTAA requires Federal agencies like the EPA to provide Congress, through OMB, with explanations when an agency decides not to use available and applicable voluntary consensus standards.

This action does not involve the proposal of any new technical standards. It does, however, incorporate by reference existing technical standards. Incorporated are EPA Reference test methods 1 through 4 and 26A, as codified under 40 CFR part 60, appendix A. Consequently, the EPA searched for voluntary consensus standards that might be applicable. The search was conducted through the National Standards System Network (NSSN), an automated service provided by the American National Standards Institute (ANSI) for identifying available national and international standards. The search identified no applicable equivalent standards. Therefore, the final rule relies solely on use of the government-unique technical standards cited above for determining compliance.

As part of a larger effort, the EPA is undertaking a project to cross-reference existing voluntary consensus standards on testing, sampling, and analysis with current and future EPA test methods. When completed, this project will assist the EPA in identifying potentially-applicable voluntary consensus standards that can then be evaluated for equivalency and applicability in determining compliance with future regulations.

J. Pollution Prevention Act

"Pollution prevention" means source reduction as defined under the Pollution Prevention Act of 1990 (e.g., equipment or technology modifications, process or procedure modifications, reformulation or redesign of products, substitution of raw materials, and improvements in housekeeping, maintenance, training, or inventory control), and other practices that reduce or eliminate the creation of pollutants through increased efficiency in the use of raw materials, energy, water, or other resources, or protection of natural resources by conservation.

The steel pickling industry employs pollution prevention techniques through regeneration of spent pickle liquor. The 10 acid regeneration plants operating in 1991 recovered about 40 percent of the pickling acid requirements for the industry in that year. Without the savings provided by the use of regenerated acid, additional costs would be incurred for treatment or disposal of waste pickle liquor (K062) that are otherwise avoided. The final rule encourages use of acid regeneration by providing simplified and cost effective compliance requirements.

The final rule also encourages pollution prevention through improved maintenance of air pollution control devices. Proper operation maintenance of control systems results in more effective emissions control.

K. Executive Order 13084: Consultation and Coordination with Indian Tribal Governments

Under Executive Order 13084, the EPA may not issue a regulation that is not required by statute, that significantly or uniquely affects the communities of Indian tribal governments, and that imposes substantial direct compliance costs on those communities, unless the Federal government provides the funds necessary to pay the direct compliance cost incurred by the tribal governments or the EPA consults with those governments. If the EPA complies by consulting, the EPA must provide to the Office of Management and Budget, in a separately identified section of the preamble to the rule, a description of the extent of the EPA's prior consultation with representatives of affected tribal governments, a summary of the nature of their concerns, and a statement supporting the need to issue the regulation. In addition, Executive Order 13084 requires the EPA to develop an effective process permitting elected officials and other representatives of Indian tribal governments "to provide meaningful and timely input in the development of regulatory policies on matters that significantly or uniquely affect their communities."

Today's rule does not significantly or uniquely affect the communities of Indian tribal governments. No steel pickling facilities are owned or operated by Indian by tribal governments. Accordingly, the requirements of section 3(b) of Executive Order 13084 do not apply to this rule.

List of Subjects in 40 CFR Part 63

Environmental protection, Air pollution control, Hazardous substances, Reporting and recordkeeping requirements, Steel pickling.

Dated: May 12, 1999.

Carol M. Browner,

Administrator.

For the reasons set out in the preamble, part 63 of title 40, chapter I of the Code of Federal Regulations is amended as follows:

PART 63—[AMENDED]

1. The authority for part 63 continues to read as follows:

Authority: 42 U.S.C. 7401 *et seq.*

2. Part 63 is amended by adding subpart CCC to read as follows:

Subpart CCC—National Emission Standards for Hazardous Air Pollutants for Steel Pickling—HCl Process Facilities and Hydrochloric Acid Regeneration Plants

Sec.
63.1155 Applicability.
63.1156 Definitions.
63.1157 Emission standards for existing sources.
63.1158 Emission standards for new or reconstructed sources.
63.1159 Operational and equipment requirements for existing, new, or reconstructed sources.
63.1160 Compliance dates and maintenance requirements.
63.1161 Performance testing and test methods.
63.1162 Monitoring requirements.
63.1163 Notification requirements.
63.1164 Reporting requirements.
63.1165 Recordkeeping requirements.
63.1166 Delegation of authority.
63.1167–63.1174 [Reserved]
Table 1 to Subpart CCC—Applicability of General Provisions (40 CFR part 63, subpart A) to subpart CCC

Subpart CCC—National Emission Standards for Hazardous Air Pollutants for Steel Pickling—HCl Process Facilities and Hydrochloric Acid Regeneration Plants

§ 63.1155 Applicability.

(a) The provisions of this subpart apply to the following facilities and plants that are major sources for hazardous air pollutants (HAP) or are parts of facilities that are major sources for HAP:

(1) All new and existing steel pickling facilities that pickle carbon steel using hydrochloric acid solution that contains 6 percent or more by weight HCl and is at a temperature of 100 °F or higher; and

(2) All new and existing hydrochloric acid regeneration plants.

(3) The provisions of this subpart do not apply to facilities that pickle carbon steel without using hydrochloric acid, to facilities that pickle only specialty steel, or to acid regeneration plants that regenerate only acids other than hydrochloric acid.

(b) For the purposes of implementing this subpart, the affected sources at a facility or plant subject to this subpart are as follows: Continuous and batch pickling lines, hydrochloric acid regeneration plants, and hydrochloric acid storage vessels.

(c) Table 1 to this subpart specifies the provisions of this part 63, subpart A that apply and those that do not apply to owners and operators of steel pickling facilities and hydrochloric acid regeneration plants subject to this subpart.

§ 63.1156 Definitions.

Terms used in this subpart are defined in the Clean Air Act, in subpart A of this part, or in this section as follows:

Batch pickling line means the collection of equipment and tanks configured for pickling metal in any form but usually in discrete shapes where the material is lowered in batches into a bath of acid solution, allowed to remain until the scale is dissolved, then removed from the solution, drained, and rinsed by spraying or immersion in one or more rinse tanks to remove residual acid.

Carbon steel means steel that contains approximately 2 percent or less carbon, 1.65 percent or less manganese, 0.6

percent or less silicon, and 0.6 percent or less copper.

Closed-vent system means a system that is not open to the atmosphere and that is composed of piping, ductwork, connections, and, if necessary, flow-inducing devices that transport emissions from a process unit or piece of equipment (e.g., pumps, pressure relief devices, sampling connections, open-ended valves or lines, connectors, and instrumentation systems) back into a closed system or into any device that is capable of reducing or collecting emissions.

Continuous pickling line means the collection of equipment and tanks configured for pickling metal strip, rod, wire, tube, or pipe that is passed through an acid solution in a continuous or nearly continuous manner and rinsed in another tank or series of tanks to remove residual acid. This definition includes continuous spray towers.

Hydrochloric acid regeneration plant means the collection of equipment and processes configured to reconstitute fresh hydrochloric acid pickling solution from spent pickle liquor using a thermal treatment process.

Hydrochloric acid regeneration plant production mode means operation under conditions that result in production of usable regenerated acid or iron oxide.

Hydrochloric acid storage vessel means a stationary vessel used for the bulk containment of virgin or regenerated hydrochloric acid.

Responsible maintenance official means a person designated by the owner or operator as having the knowledge and the authority to sign records and reports required under this rule.

Specialty steel means a category of steel that includes silicon electrical, alloy, tool, and stainless steels.

Spray tower means an enclosed vertical tower in which acid pickling solution is sprayed onto moving steel strip in multiple vertical passes.

Steel pickling means the chemical removal of iron oxide mill scale that is formed on steel surfaces during hot rolling or hot forming of semi-finished steel products through contact with an aqueous solution of acid where such contact occurs prior to shaping or coating of the finished steel product. This definition does not include removal of light rust or scale from finished steel products or activation of the metal surface prior to plating or coating.

Steel pickling facility means any facility that operates one or more batch or continuous steel pickling lines.

§ 63.1157 Emission standards for existing sources.

(a) *Pickling lines.* No owner or operator of an existing affected continuous or batch pickling line at a steel pickling facility shall cause or allow to be discharged into the atmosphere from the affected pickling line:

(1) Any gases that contain HCl in a concentration in excess of 18 parts per million by volume (ppmv); or

(2) HCl at a mass emission rate that corresponds to a collection efficiency of less than 97 percent.

(b) *Hydrochloric acid regeneration plants.* (1) No owner or operator of an existing affected plant shall cause or allow to be discharged into the atmosphere from the affected plant any gases that contain HCl in a concentration greater than 25 ppmv.

(2) In addition to the requirement of paragraph (b)(1) of this section, no owner or operator of an existing affected plant shall cause or allow to be discharged into the atmosphere from the affected plant any gases that contain chlorine (Cl_2) in a concentration in excess of either 6 ppmv or an alternative source-specific maximum concentration. The source-specific maximum concentration standard shall be established according to § 63.1161(c)(2) of this subpart.

§ 63.1158 Emission standards for new or reconstructed sources.

(a) *Pickling lines.*—(1) *Continuous pickling lines.* No owner or operator of a new or reconstructed affected continuous pickling line at a steel pickling facility shall cause or allow to be discharged into the atmosphere from the affected pickling line:

(i) Any gases that contain HCl in a concentration in excess of 6 ppmv; or

(ii) HCl at a mass emission rate that corresponds to a collection efficiency of less than 99 percent.

(2) *Batch pickling lines.* No owner or operator of a new or reconstructed affected batch pickling line at a steel pickling facility shall cause or allow to be discharged into the atmosphere from the affected pickling line:

(i) Any gases that contain HCl in a concentration in excess of 18 ppmv; or

(ii) HCl at a mass emission rate that corresponds to a collection efficiency of less than 97 percent.

(b) *Hydrochloric acid regeneration plants.* (1) No owner or operator of a new or reconstructed affected plant shall cause or allow to be discharged into the atmosphere from the affected plant any gases that contain HCl in a concentration greater than 12 ppmv.

(2) In addition to the requirement of paragraph (b)(1) of this section, no owner or operator of a new or reconstructed affected plant shall cause or allow to be discharged into the atmosphere from the affected plant any gases that contain Cl_2 in a concentration in excess of 6 ppmv.

§ 63.1159 Operational and equipment standards for existing, new, or reconstructed sources.

(a) *Hydrochloric acid regeneration plant.* The owner or operator of an affected plant must operate the affected plant at all times while in production mode in a manner that minimizes the proportion of excess air fed to the process and maximizes the process offgas temperature consistent with producing usable regenerated acid or iron oxide.

(b) *Hydrochloric acid storage vessels.* The owner or operator of an affected vessel shall provide and operate, except during loading and unloading of acid, a closed-vent system for each vessel. Loading and unloading shall be conducted either through enclosed lines or each point where the acid is exposed to the atmosphere shall be equipped with a local fume capture system, ventilated through an air pollution control device.

§ 63.1160 Compliance dates and maintenance requirements.

(a) *Compliance dates.* (1) The owner or operator of an affected existing steel pickling facility and/or hydrochloric acid regeneration plant subject to this subpart shall achieve initial compliance with the requirements of this subpart no later than June 22, 2001.

(2) The owner or operator of a new or reconstructed steel pickling facility and/or hydrochloric acid regeneration plant subject to this subpart that commences construction or reconstruction after September 18, 1997, shall achieve compliance with the requirements of this subpart immediately upon startup of operations or by June 22, 1999, whichever is later.

(b) *Maintenance requirements.* (1) The owner or operator of an affected source shall comply with the operation and maintenance requirements prescribed under § 63.6(e) of subpart A of this part.

(2) In addition to the requirements specified in paragraph (b)(1) of this section, the owner or operator shall prepare an operation and maintenance plan for each emission control device to be implemented no later than the compliance date. The plan shall be incorporated by reference into the source's title V permit. All such plans must be consistent with good maintenance practices and, for a scrubber emission control device, must at a minimum:

(i) Require monitoring and recording the pressure drop across the scrubber once per shift while the scrubber is operating in order to identify changes that may indicate a need for maintenance;

(ii) Require the manufacturer's recommended maintenance at the recommended intervals on fresh solvent pumps, recirculating pumps, discharge pumps, and other liquid pumps, in addition to exhaust system and scrubber fans and motors associated with those pumps and fans;

(iii) Require cleaning of the scrubber internals and mist eliminators at intervals sufficient to prevent buildup of solids or other fouling;

(iv) Require an inspection of each scrubber at intervals of no less than 3 months with:

(A) Cleaning or replacement of any plugged spray nozzles or other liquid delivery devices;

(B) Repair or replacement of missing, misaligned, or damaged baffles, trays, or other internal components;

(C) Repair or replacement of droplet eliminator elements as needed;

(D) Repair or replacement of heat exchanger elements used to control the temperature of fluids entering or leaving the scrubber; and

(E) Adjustment of damper settings for consistency with the required air flow.

(v) If the scrubber is not equipped with a viewport or access hatch allowing visual inspection, alternate means of inspection approved by the Administrator may be used.

(vi) The owner or operator shall initiate procedures for corrective action within 1 working day of detection of an operating problem and complete all corrective actions as soon as practicable. Procedures to be initiated are the applicable actions that are specified in the maintenance plan. Failure to initiate or provide appropriate repair, replacement, or other corrective action is a violation of the maintenance requirement of this subpart.

(vii) The owner or operator shall maintain a record of each inspection, including each item identified in paragraph (b)(2)(iv) of this section, that is signed by the responsible maintenance official and that shows the date of each inspection, the problem identified, a description of the repair, replacement, or other corrective action taken, and the date of the repair, replacement, or other corrective action taken.

(3) The owner or operator of each hydrochloric acid regeneration plant shall develop and implement a written maintenance program. The program shall require:

(i) Performance of the manufacturer's recommended maintenance at the recommended intervals on all required systems and components;

(ii) Initiation of procedures for appropriate and timely repair, replacement, or other corrective action within 1 working day of detection; and

(iii) Maintenance of a daily record, signed by a responsible maintenance official, showing the date of each inspection for each requirement, the problems found, a description of the repair, replacement, or other action taken, and the date of repair or replacement.

§ 63.1161 Performance testing and test methods.

(a) *Demonstration of compliance.* The owner or operator shall conduct an initial performance test for each process or emission control device to determine and demonstrate compliance with the applicable emission limitation according to the requirements in § 63.7 of subpart A of this part and in this section.

(1) Following approval of the site-specific test plan, the owner or operator shall conduct a performance test for each process or control device to either measure simultaneously the mass flows of HCl at the inlet and the outlet of the control device (to determine compliance with the applicable collection efficiency standard) or measure the concentration of HCl (and Cl_2 for hydrochloric acid regeneration plants) in gases exiting the process or the emission control device (to determine compliance with the applicable emission concentration standard).

(2) Compliance with the applicable concentration standard or collection efficiency standard shall be determined by the average of three consecutive runs or by the average of any three of four consecutive runs. Each run shall be conducted under conditions representative of normal process operations.

(3) Compliance is achieved if either the average collection efficiency as determined by the HCl mass flows at the control device inlet and outlet is greater than or equal to the applicable collection efficiency standard, or the average measured concentration of HCl or Cl_2 exiting the process or the emission control device is less than or equal to the applicable emission concentration standard.

(b) *Establishment of scrubber operating parameters.* During the performance test for each emission control device, the owner or operator using a wet scrubber to achieve compliance shall establish site-specific operating parameter values for the minimum scrubber makeup water flow rate and, for scrubbers that operate with recirculation, the minimum recirculation water flow rate. During the emission test, each operating parameter must be monitored continuously and recorded with sufficient frequency to establish a representative average value for that parameter, but no less frequently than once every 15 minutes. The owner or operator shall determine the operating parameter monitoring values as the averages of the values recorded during any of the runs for which results are used to establish the emission concentration or collection efficiency per paragraph (a)(2) of this section. An owner or operator may conduct multiple performance tests to establish alternative compliant operating parameter values. Also, an owner or operator may reestablish compliant operating parameter values as part of any performance test that is conducted subsequent to the initial test or tests.

(c) *Establishment of hydrochloric acid regeneration plant operating parameters.* (1) During the performance test for hydrochloric acid regeneration plants, the owner or operator shall establish site-specific operating parameter values for the minimum process offgas temperature and the maximum proportion of excess air fed to the process as described in § 63.1162(b)(1) of this subpart. During the emission test, each operating parameter must be monitored and recorded with sufficient frequency to establish a representative average value for that parameter, but no less frequently than once every 15 minutes for parameters that are monitored continuously. Amount of iron in the spent pickle liquor shall be determined for each run by sampling the liquor every 15 minutes and analyzing a composite of the samples. The owner or operator shall determine the compliant monitoring values as the averages of the values recorded during any of the runs for which results are used to establish the emission concentration per paragraph (a)(2) of this section. An owner or operator may conduct multiple performance tests to establish alternative compliant operating parameter values. Also, an owner or operator may reestablish compliant operating parameter values as part of any performance test that is conducted subsequent to the initial test or tests.

(2) During this performance test, the owner or operator of an existing affected plant may establish an alternative concentration standard if the owner or operator can demonstrate to the

Administrator's satisfaction that the plant cannot meet a concentration limitation for Cl_2 of 6 ppmv when operated within its design parameters. The alternative concentration standard shall be established through performance testing while the plant is operated at maximum design temperature and with the minimum proportion of excess air that allows production of iron oxide of acceptable quality while measuring the Cl_2 concentration in the process exhaust gas. The measured concentration shall be the concentration standard for that plant.

(d) *Test methods.* (1) The following test methods in appendix A of 40 CFR part 60 shall be used to determine compliance under § 63.1157(a), § 63.1157(b), § 63.1158(a), and § 63.1158(b) of this subpart:

(i) Method 1, to determine the number and location of sampling points, with the exception that no traverse point shall be within one inch of the stack or duct wall:

(ii) Method 2, to determine gas velocity and volumetric flow rate:

(iii) Method 3, to determine the molecular weight of the stack gas:

(iv) Method 4, to determine the moisture content of the stack gas; and

(v) Method 26A, "Determination of Hydrogen Halide and Halogen Emissions from Stationary Sources—Isokinetic Method," to determine the HCl mass flows at the inlet and outlet of a control device or the concentration of HCl discharged to the atmosphere, and also to determine the concentration of Cl_2 discharged to the atmosphere from acid regeneration plants. If compliance with a collection efficiency standard is being demonstrated, inlet and outlet measurements shall be performed simultaneously. The minimum sampling time for each run shall be 60 minutes and the minimum sample volume 0.85 dry standard cubic meters (30 dry standard cubic feet). The concentrations of HCl and Cl_2 shall be calculated for each run as follows:

$C_{HCl}(ppmv) = 0.659\ C_{HCl}(mg/dscm)$,

and $C_{Cl2}(ppmv) = 0.339\ C_{Cl2}(mg/dscm)$,

where C(ppmv) is concentration in ppmv and C(mg/dscm) is concentration in milligrams per dry standard cubic meter as calculated by the procedure given in Method 26A.

(2) The owner or operator may use equivalent alternative measurement methods approved by the Administrator.

§ 63.1162 Monitoring requirements.

(a) The owner or operator of a new, reconstructed, or existing steel pickling facility or acid regeneration plant subject to this subpart shall:

(1) Conduct performance tests to measure the HCl mass flows at the control device inlet and outlet or the concentration of HCl exiting the control device according to the procedures described in § 63.1161 of this subpart. Performance tests shall be conducted either annually or according to an alternative schedule that is approved by the applicable permitting authority, but no less frequently than every 2½ years or twice per title V permit term. If any performance test shows that the HCl emission limitation is being exceeded, then the owner or operator is in violation of the emission limit.

(2) In addition to conducting performance tests, if a wet scrubber is used as the emission control device, install, operate, and maintain systems for the measurement and recording of the scrubber makeup water flow rate and, if required, recirculation water flow rate. These flow rates must be monitored continuously and recorded at least once per shift while the scrubber is operating. Operation of the wet scrubber with excursions of scrubber makeup water flow rate and recirculation water flow rate less than the minimum values established during the performance test or tests will require initiation of corrective action as specified by the maintenance requirements in § 63.1160(b)(2) of this subpart.

(3) If an emission control device other than a wet scrubber is used, install, operate, and maintain systems for the measurement and recording of the appropriate operating parameters.

(4) Failure to record each of the operating parameters listed in paragraph (a)(2) of this section is a violation of the monitoring requirements of this subpart.

(5) Each monitoring device shall be certified by the manufacturer to be accurate to within 5 percent and shall be calibrated in accordance with the manufacturer's instructions but not less frequently than once per year.

(6) The owner or operator may develop and implement alternative monitoring requirements subject to approval by the Administrator.

(b) The owner or operator of a new, reconstructed, or existing acid regeneration plant subject to this subpart shall also install, operate, and maintain systems for the measurement and recording of the:

(1) Process offgas temperature, which shall be monitored continuously and recorded at least once every shift while the facility is operating in production mode; and

(2) Parameters from which proportion of excess air is determined. Proportion of excess air shall be determined by a combination of total air flow rate, fuel flow rate, spent pickle liquor addition rate, and amount of iron in the spent pickle liquor, or by any other combination of parameters approved by the Administrator in accordance with § 63.8(f) of subpart A of this part. Proportion of excess air shall be determined and recorded at least once every shift while the plant is operating in production mode.

(3) Each monitoring device must be certified by the manufacturer to be accurate to within 5 percent and must be calibrated in accordance with the manufacturer's instructions but not less frequently than once per year.

(4) Operation of the plant with the process offgas temperature lower than the value established during performance testing or with the proportion of excess air greater than the value established during performance testing is a violation of the operational standard specified in § 63.1159(a) of this subpart.

(c) The owner or operator of an affected hydrochloric acid storage vessel shall inspect each vessel semiannually to determine that the closed-vent system and either the air pollution control device or the enclosed loading and unloading line, whichever is applicable, are installed and operating when required.

§ 63.1163 Notification requirements.

(a) *Initial notifications.* As required by § 63.9(b) of subpart A of this part, the owner or operator shall submit the following written notifications to the Administrator:

(1) The owner or operator of an area source that subsequently becomes subject to the requirements of the standard shall provide notification to the applicable permitting authority as required by § 63.9(b)(1) of subpart A of this part.

(2) As required by § 63.9(b)(2) of subpart A of this part, the owner or operator of an affected source that has an initial startup before June 22, 1999, shall notify the Administrator that the source is subject to the requirements of the standard. The notification shall be submitted not later than October 20, 1999 (or within 120 calendar days after the source becomes subject to this standard), and shall contain the information specified in §§ 63.9(b)(2)(i) through 63.9(b)(2)(v) of subpart A of this part.

(3) As required by § 63.9(b)(3) of subpart A of this part, the owner or operator of a new or reconstructed

affected source, or a source that has been reconstructed such that it is an affected source, that has an initial startup after the effective date and for which an application for approval of construction or reconstruction is not required under § 63.5(d) of subpart A of this part, shall notify the Administrator in writing that the source is subject to the standards no later than 120 days after initial startup. The notification shall contain the information specified in §§ 63.9(b)(2)(i) through 63.9(b)(2)(v) of subpart A of this part, delivered or postmarked with the notification required in § 63.9(b)(5) of subpart A of this part.

(4) As required by § 63.9(b)(4) of subpart A of this part, the owner or operator of a new or reconstructed major affected source that has an initial startup after June 22, 1999, and for which an application for approval of construction or reconstruction is required under § 63.5(d) of subpart A of this part shall provide the information specified in §§ 63.9(b)(4)(i) through 63.9(b)(4)(v) of subpart A of this part.

(5) As required by § 63.9(b)(5) of subpart A of this part, the owner or operator who, after June 22, 1999, intends to construct a new affected source or reconstruct an affected source subject to this standard, or reconstruct a source such that it becomes an affected source subject to this standard, shall notify the Administrator, in writing, of the intended construction or reconstruction.

(b) *Request for extension of compliance.* As required by § 63.9(c) of subpart A of this part, if the owner or operator of an affected source cannot comply with this standard by the applicable compliance date for that source, or if the owner or operator has installed BACT or technology to meet LAER consistent with § 63.6(i)(5) of subpart A of this part, he/she may submit to the Administrator (or the State with an approved permit program) a request for an extension of compliance as specified in §§ 63.6(i)(4) through 63.6(i)(6) of subpart A of this part.

(c) *Notification that source is subject to special compliance requirements.* As required by § 63.9(d) of subpart A of this part, an owner or operator of a new source that is subject to special compliance requirements as specified in §§ 63.6(b)(3) and 63.6(b)(4) of subpart A of this part shall notify the Administrator of his/her compliance obligations not later than the notification dates established in § 63.9(b) of subpart A of this part for new sources that are not subject to the special provisions.

(d) *Notification of performance test.* As required by § 63.9(e) of subpart A of this part, the owner or operator of an affected source shall notify the Administrator in writing of his or her intention to conduct a performance test at least 60 calendar days before the performance test is scheduled to begin, to allow the Administrator to review and approve the site-specific test plan required under § 63.7(c) of subpart A of this part and, if requested by the Administrator, to have an observer present during the test.

(e) *Notification of compliance status.* The owner or operator of an affected source shall submit a notification of compliance status as required by § 63.9(h) of subpart A of this part when the source becomes subject to this standard.

§ 63.1164 Reporting requirements.

(a) *Reporting results of performance tests.* As required by § 63.10(d)(2) of subpart A of this part, the owner or operator of an affected source shall report the results of any performance test as part of the notification of compliance status required in § 63.1163 of this subpart.

(b) *Progress reports.* The owner or operator of an affected source who is required to submit progress reports under § 63.6(i) of subpart A of this part shall submit such reports to the Administrator (or the State with an approved permit program) by the dates specified in the written extension of compliance.

(c) *Periodic startup, shutdown, and malfunction reports.* Section 63.6(e) of subpart A of this part requires the owner or operator of an affected source to operate and maintain each affected emission source, including associated air pollution control equipment, in a manner consistent with good air pollution control practices for minimizing emissions at least to the level required by the standard at all times, including during any period of startup, shutdown, or malfunction. Malfunctions must be corrected as soon as practicable after their occurrence in accordance with the startup, shutdown, and malfunction plan.

(1) *Plan.* As required by § 63.6(e)(3) of subpart A of this part, the owner or operator shall develop and implement a written startup, shutdown, and malfunction plan that describes, in detail, procedures for operating and maintaining the source during periods of startup, shutdown, or malfunction, and a program of corrective action for malfunctioning process and air pollution control equipment used to comply with the relevant standard.

(2) *Reports.* As required by § 63.10(d)(5)(i) of subpart A of this part, if actions taken by an owner or operator during a startup, shutdown, or malfunction of an affected source (including actions taken to correct a malfunction) are consistent with the procedures specified in the startup, shutdown, and malfunction plan, the owner or operator shall state such information in a semiannual report. The report, to be certified by the owner or operator or other responsible official, shall be submitted semiannually and delivered or postmarked by the 30th day following the end of each calendar half; and

(3) *Immediate Reports.* Any time an action taken by an owner or operator during a startup, shutdown, or malfunction (including actions taken to correct a malfunction) is not consistent with the procedures in the startup, shutdown, and malfunction plan, the owner or operator shall comply with all requirements of § 63.10(d)(5)(ii) of subpart A of this part.

§ 63.1165 Recordkeeping requirements.

(a) *General recordkeeping requirements.* As required by § 63.10(b)(2) of subpart A of this part, the owner or operator shall maintain records for 5 years from the date of each record of:

(1) The occurrence and duration of each startup, shutdown, or malfunction of operation (i.e., process equipment);

(2) The occurrence and duration of each malfunction of the air pollution control equipment;

(3) All maintenance performed on the air pollution control equipment;

(4) Actions taken during periods of startup, shutdown, and malfunction and the dates of such actions (including corrective actions to restore malfunctioning process and air pollution control equipment to its normal or usual manner of operation) when these actions are different from the procedures specified in the startup, shutdown, and malfunction plan;

(5) All information necessary to demonstrate conformance with the startup, shutdown, and malfunction plan when all actions taken during periods of startup, shutdown, and malfunction (including corrective actions to restore malfunctioning process and air pollution control equipment to its normal or usual manner of operation) are consistent with the procedures specified in such plan. This information can be recorded in a checklist or similar form (see § 63.10(b)(2)(v) of subpart A of this part);

(6) All required measurements needed to demonstrate compliance with the standard and to support data that the source is required to report, including, but not limited to, performance test measurements (including initial and any subsequent performance tests) and measurements as may be necessary to determine the conditions of the initial test or subsequent tests:

(7) All results of initial or subsequent performance tests;

(8) If the owner or operator has been granted a waiver from recordkeeping or reporting requirements under § 63.10(f) of subpart A of this part, any information demonstrating whether a source is meeting the requirements for a waiver of recordkeeping or reporting requirements;

(9) If the owner or operator has been granted a waiver from the initial performance test under § 63.7(h) of subpart A of this part, a copy of the full request and the Administrator's approval or disapproval;

(10) All documentation supporting initial notifications and notifications of compliance status required by § 63.9 of subpart A of this part; and

(11) Records of any applicability determination, including supporting analyses.

(b) *Subpart CCC records.* (1) In addition to the general records required by paragraph (a) of this section, the owner or operator shall maintain records for 5 years from the date of each record of:

(i) Scrubber makeup water flow rate and recirculation water flow rate if a wet scrubber is used;

(ii) Calibration and manufacturer certification that monitoring devices are accurate to within 5 percent; and

(iii) Each maintenance inspection and repair, replacement, or other corrective action.

(2) The owner or operator of an acid regeneration plant shall also maintain records for 5 years from the date of each record of process offgas temperature and parameters that determine proportion of excess air.

(3) The owner or operator shall keep the written operation and maintenance plan on record after it is developed to be made available for inspection, upon request, by the Administrator for the life of the affected source or until the source is no longer subject to the provisions of this subpart. In addition, if the operation and maintenance plan is revised, the owner or operator shall keep previous (i.e., superseded) versions of the plan on record to be made available for inspection by the Administrator for a period of 5 years after each revision to the plan.

(c) *Recent records.* General records and subpart CCC records for the most recent 2 years of operation must be maintained on site. Records for the previous 3 years may be maintained off site.

§ 63.1166 Delegation of authority.

(a) In delegating implementation and enforcement authority to a State under 40 CFR part 63, subpart E, the following authorities shall be retained by the Administrator and not transferred to a State:

(1) Approval of alternative emission standards for existing, new, and reconstructed pickling lines, hydrochloric acid regeneration plants, and hydrochloric acid storage vessels to those standards specified in §§ 63.1157 and 63.1158 of this subpart;

(2) Approval of alternative measurement methods for HCl and Cl_2 to those specified in § 63.1161(d)(1) of this subpart;

(3) Approval of alternative monitoring requirements to those specified in §§ 63.1162(a)(2) through 63.1162(a)(5) and 63.1162(b)(1) through 63.1162(b)(3) of this subpart; and

(4) Waiver of recordkeeping requirements specified in § 63.1165 of this subpart.

(b) The following authorities shall be delegated to a State: All other authorities, including approval of an alternative schedule for conducting performance tests to the requirement specified in § 63.1162(a)(1) of this subpart.

§§ 63.1167—63.1174 [Reserved]

TABLE 1 TO SUBPART CCC.—APPLICABILITY OF GENERAL PROVISIONS (40 CFR PART 63, SUBPART A) TO SUBPART CCC

Reference	Applies to Subpart CCC	Explanation
63.1–63.5	Yes.	
63.6 (a)–(g)	Yes.	
63.6 (h)	No	Subpart CCC does not contain an opacity or visible emission standard.
63.6 (i)–(j)	Yes.	
63.7–63.9	Yes.	
63.10 (a)–(c)	Yes.	
63.10 (d) (1)–(2)	Yes.	
63.10 (d)(3)	No	Subpart CCC does not contain an opacity or visible emission standard.
63.10 (d) (4)–(5)	Yes.	
63.10 (e)–(f)	Yes.	
63.11	No	Subpart CCC does not require the use of flares.
63.12–63.15	Yes.	

[FR Doc. 99–12939 Filed 6–21–99; 8:45 am]

BILLING CODE 6560–50–P

ENVIRONMENTAL PROTECTION AGENCY

40 CFR Parts 9 and 63

[AD–FRL–6345–5]

RIN–2060–AE83

National Emission Standards for Hazardous Air Pollutants: Pesticide Active Ingredient Production

AGENCY: Environmental Protection Agency (EPA).

ACTION: Final rule.

SUMMARY: This action promulgates national emission standards for hazardous air pollutants (NESHAP) for the pesticide active ingredient (PAI) production source category under section 112 of the Clean Air Act as amended (CAA or Act). The intent of the standards is to reduce emissions of hazardous air pollutants (HAP) from existing and new facilities that manufacture organic PAI used in herbicides, insecticides, and fungicides. The standards protect human health and the environment by reducing HAP emissions to the level corresponding to the maximum achievable control technology (MACT) through the use of pollution prevention measures and control strategies. The major HAP emitted by facilities covered by this rule include toluene, methanol, methyl chloride, and hydrogen chloride (HCl). All of these pollutants can cause reversible or irreversible toxic effects following exposure. The rule is estimated to reduce total HAP emissions from existing facilities by 2,500 megagrams per year (Mg/yr) (2,755 tons per year (tons/yr)), a reduction of 65 percent from the baseline emission level. Because many of these pollutants are also volatile organic compounds (VOC), which are precursors to ambient ozone, the rule will aid in the reduction of tropospheric ozone. The emission reductions achieved by these standards, when combined with the emission reductions achieved by other similar standards, will achieve the primary goal of the CAA, which is to "enhance the quality of the Nation's air resources so as to promote the public health and welfare and the productive capacity of its population."

The July 16, 1992 source category list included an agricultural chemicals industry group that contained 10 source categories. Today's final rule groups these 10 agricultural chemicals source categories into one source category, renames the source category, and adds additional chemical production processes to the source category.

EFFECTIVE DATE: June 23, 1999.

ADDRESSES: *Docket.* Docket No. A–95–20, containing supporting information considered by the EPA in developing the promulgated standards, is available for public inspection and copying between 8:30 a.m. and 5:30 p.m., Monday through Friday, at EPA's Air and Radiation Docket and Information Center, Waterside Mall, Room 1500, 1st Floor, 401 M Street SW, Washington, DC 20460. A reasonable fee may be charged for copying.

FOR FURTHER INFORMATION CONTACT: For information concerning this final rule, contact Mr. Lalit Banker at (919) 541–5420, Organic Chemicals Group, Emission Standards Division (MD–13), U.S. Environmental Protection Agency, Research Triangle Park, North Carolina 27711. For information concerning applicability and rule determinations, contact your State or local representative or the appropriate EPA regional representatives. For a list of regional representatives, see the **SUPPLEMENTARY INFORMATION** section.

SUPPLEMENTARY INFORMATION: *Regulated entities.* Entities potentially regulated are those which produce PAI's and integral intermediates that are used in herbicides, insecticides, or fungicides and are located at facilities that are major sources as defined in section 112 of the CAA. Regulated categories and entities include:

Category	NAICS codes	SIC codes	Examples of potentially regulated entities
Industry	Typically, 325199 and 32532.	Typically, 2869 and 2879.	• Producers of pesticide active ingredients that contain organic compounds and are used in herbicides, insecticides, or fungicides. • Producers of any integral intermediate used in the onsite production of an active ingredient used in an herbicide, insecticide, or fungicide.

The foregoing table is not intended to be exhaustive, but rather provides a guide for readers regarding entities likely to be regulated by this action. This table lists the types of entities that EPA is now aware could potentially be regulated by this action. Other types of entities not listed in the table could also be affected. To determine whether your facility, company, business organization, etc., is regulated by this action, you should carefully examine the applicability criteria in § 63.1360 of the rule. If you have questions regarding the applicability of this action to a particular entity, consult the person(s) listed in the **FOR FURTHER INFORMATION CONTACT** section.

Regional Representatives. The EPA regional representatives are:

Region I

NESHAP (MACT) Coordinator, U.S. EPA Region I, John F. Kennedy Federal Building, One Congress Street, Boston, MA 02114–2023, (617) 918–1111

Region II

Umesh Dholakia, U.S. EPA Region II, 290 Broadway Street, New York, NY 10007–1866, (212) 637–4023 (Umesh)

Region III

Bernard Turlinski, U.S. EPA Region III, 841 Chestnut Building, Philadelphia, PA 19107, (215) 566–2150

Region IV

Lee Page, U.S. EPA Region IV, Atlanta Federal Center, 61 Forsyth Street SW, Atlanta, GA 30303–3104, (404) 562–9131

Region V

Bruce Varner, U.S. EPA Region V, 77 West Jackson Boulevard, Chicago, IL 60604–3507, (312) 886–6793

Region VI

Robert Todd, U.S. EPA Region VI, First Interstate Bank Tower @ Fountain Place, 1445 Ross Avenue, 12th Floor, Suite 1200, Dallas, TX 75202–2733, (214) 665–2156

Region VII

Richard Tripp, U.S. EPA Region VII, Air Toxics Coordinator, 726 Minnesota Avenue, Kansas City, KS 66101, (913) 551–7566

Region VIII

Ann Marie Patrie, U.S. EPA Region VIII, Air Toxics Coordinator, 999 18th Street, Suite 500, Denver, CO 80202–2466, (303) 312–6524

Region IX

Nahid Zoueshtiagh, U.S. EPA Region IX, Air Division-6, 75 Hawthorne Street, San Francisco, CA 94105, (415) 744–1261

Region X

Andrea Wullenweber, U.S. EPA Region X, Air Toxics Coordinator, 1200 Sixth Avenue, Seattle, WA 98101, (206) 553-8760

Background Documentation. The following is a listing of background documents pertaining to this rulemaking. The complete title, EPA publication number, publication date, docket item number, and the abbreviated descriptive title used to refer to the document throughout this notice are included.

(1) National Emission Standards for Hazardous Air Pollutants (NESHAP) for the Pesticide Active Ingredient Production Industry: Summary of Public Comments and Responses. EPA-453/R-98-011. April 1999. Docket item No. IV-B-1. Response to Comment Document for Promulgated Standards.

(2) Pesticide Active Ingredient NESHAP—Basis and Purpose document. July 1997. Docket item No. III-B-1. Basis and Purpose Document.

(3) Hazardous Air Pollutant Emissions From the Pesticide Active Ingredient Production Industry—Supplementary Information Document for Proposed Standards. July 1997. Docket item No. II-B-21. Supplementary Information Document.

The response to comment document for the promulgated standards contains: (1) a summary of all the public comments made on the proposed rule and the Administrator's response to the comments; and (2) a summary of the changes made to the rule since proposal. The basis and purpose document contains much of the rationale for the standards. The supplementary information document contains a compilation of technical memoranda.

Electronic Versions of Documents. Electronic versions of documents from the Office of Air and Radiation (OAR) are available for downloading from EPA's OAR Technology Transfer Network Web site (TTNWeb). The TTNWeb is a collection of related Web sites containing information about many areas of air pollution science, technology, regulation, measurement, and prevention. The TTNWeb is directly accessible from the Internet via the World Wide Web at the following address: "http://www.epa.gov/ttn." This preamble and rule are located under the OAR Policy and Guidance Information Web site, "http://www.epa.gov/ttn/oarpg/t3main.html," under the **Federal Register** Notices section. The background documents are located at the same web site, under the Reports section. If more information on the TTNWeb is needed, contact the Systems Operator at (919) 541-5384.

Judicial review. Under section 307(b)(1) of the CAA, judicial review of NESHAP is available only by filing a petition for review in the U.S. Court of Appeals for the District of Columbia Circuit within 60 days of today's publication of this final rule. Under section 307(b)(2) of the CAA, the requirements that are the subject of today's final rule may not be challenged later in civil or criminal proceedings brought by the EPA to enforce these requirements.

The information presented in this preamble is organized as follows:

I. List of Source Categories
- A. Initial Source Categories
- B. Addition of Other Pesticide Active Ingredients
- C. Single Source Category
- D. Change of the Source Category Name

II. Background
- A. Summary of Considerations Made in Developing this Rule
- B. Regulatory Background

III. Authority for NESHAP Decision Process
- A. Source of Authority for NESHAP Development
- B. Criteria for Development of NESHAP

IV. Summary of Promulgated Standards
- A. Source Categories to be Regulated
- B. Pollutants to be Regulated and Associated Environmental and Health Benefits
- C. Affected Sources
- D. Compliance Dates
- E. Process Vent Provisions
- F. Storage Vessel Provisions
- G. Wastewater Provisions
- H. Equipment Leak Provisions
- I. Bag Dump and Product Dryer Provisions
- J. Heat Exchanger System Provisions
- K. Alternative Standard
- L. Pollution Prevention Alternative
- M. Emissions Averaging Provisions
- N. Initial Compliance and Performance Test Provisions
- O. Monitoring Requirements
- P. Recordkeeping and Reporting Requirements

V. Summary Of Nationwide Impacts
- A. Air Impacts
- B. Water and Solid Waste Impacts
- C. Energy Impacts
- D. Cost Impacts
- E. Economic Impacts

VI. Major Comments and Changes to the Proposed Standards
- A. Applicability Provisions
- B. Compliance Dates for New Sources
- C. Process Vents Provisions
- D. Storage Vessel Provisions
- E. Equipment Leak Provisions
- F. Wastewater Provisions
- G. Bag Dump and Product Dryer Provisions
- H. Heat Exchanger Provisions
- I. Alternative Standard
- J. Pollution Prevention Alternative
- K. Emissions Averaging
- L. Testing Provisions and Initial Compliance Demonstration
- M. Monitoring
- N. Recordkeeping and Reporting
- O. Miscellaneous

VII. Technical Amendment to 40 CFR Part 9

VIII. Administrative Requirements
- A. Docket
- B. Executive Order 12866
- C. Executive Order 12875
- D. Executive Order 13084
- E. Paperwork Reduction Act
- F. Regulatory Flexibility
- G. Unfunded Mandates
- H. Submission to Congress and the Comptroller General Office
- I. National Technology Transfer and Advancement Act
- J. Executive Order 13045

I. List of Source Categories

Section 112 of the CAA requires that EPA evaluate and control emissions of HAP. The control of HAP is achieved through promulgation of emission standards under section 112 (d) and (f) and work practice and equipment standards under section 112(h) for categories of sources that emit HAP. On July 16, 1992, EPA published an initial list of major and area source categories to be regulated (57 FR 31576). Today's final rule adds additional chemical production processes to the agricultural chemicals industry group, groups the initial and additional source categories into a single source category, and renames the source category.

A. Initial Source Categories

Included on the initial source category list were major sources emitting HAP from 10 categories of agricultural chemicals production; in addition to being an agricultural chemical, each of these compounds is also a PAI. One source category on the initial source category list, butadiene furfural cotrimer (R-11) production, was moved from the polymers and resins industry group to this industry group on June 4, 1996 (61 FR 28197). The EPA decided it was appropriate to move butadiene furfural cotrimer (R-11) to the agricultural chemicals industry group because it is an insecticide commonly used for delousing cows.

B. Addition of Other Pesticide Active Ingredients

In developing the rule, the EPA identified a number of other PAI production operations that were not on the initial source category list. It was determined that production of these compounds is similar to the production of the compounds in the 11 initial agricultural chemical source categories. Production of these other PAI's are being added to the source category list under section 112(c) of the CAA based on information obtained during the gathering of HAP emission data for this proposed rule. From this information, it

was determined that: (1) there are similarities in process operations, emission characteristics, control device applicability and costs, and opportunities for pollution prevention of these PAI's with the listed agricultural chemicals; and (2) the production of these PAI's occurs at facilities that are major sources. Like the initial agricultural chemicals, these PAI's are those that are used in herbicides, insecticides, and fungicides that are registered as end-use products under section 3 of Federal Insecticide, Fungicide, and Rodenticide Act (FIFRA).

C. Single Source Category

In developing the proposed rule, EPA decided not to set MACT for each individual PAI chemical but, rather, to aggregate all PAI's together under the same source category. The PAI's that EPA proposes to include in this source category are all organic PAI's that are used to produce insecticide, herbicide, or fungicide products. Data gathered from the PAI production industry indicate that the process equipment, emission characteristics, and applicable control technologies are sufficiently similar for the broad group of sources that EPA intends to regulate under a single set of standards. There are no significant differences in the types of control technologies applicable to controlling emissions from the various PAI processes. Common HAP control technologies are applicable to the production operations at all of the facilities. Based on these factors, EPA concluded that determining MACT for each individual PAI is not warranted.

The EPA believes it is technically feasible to regulate emissions from a variety of PAI processes by a single set of emission standards. Similar to the Hazardous Organic NESHAP (HON) for the Synthetic Organic Chemical Manufacturing Industry (SOCMI), separate requirements are proposed for process vents, storage vessels, equipment leaks, and wastewater HAP emission points (often referred to as planks). The set of standards also establishes different control requirements based on distinctions in the size of the emission points. Variability in the characteristics of the production processes for each individual PAI chemical may affect the quantity of HAP emissions. This variability has been addressed by incorporating cutoffs for uncontrolled emissions in the standards for individual planks.

Several other reasons support the development of a single set of emission standards for a group of PAI processes. Many of these PAI's are only produced at a single facility or by a single company. In addition, data indicate that many of the PAI processes that EPA is proposing to regulate by this set of standards are collocated within individual facilities; at some facilities, multiple PAI's are also produced in the same equipment (i.e., flexible operating equipment). Facilities with collocated PAI manufacturing could more easily comply with a single set of emission standards than with individual standards for each of the collocated processes. Several industry representatives also expressed interest in a generic regulation that would specify consistent requirements for a wide range of processes.

Another justification for developing a single set of emission standards to regulate production of a variety of PAI's is that it is more efficient and less costly for EPA to develop a single standard than to develop separate standards for several individually listed source categories which have similar emission characteristics and applicable control technologies. A single set of standards for PAI manufacturing will ensure that process equipment with comparable HAP emissions and control technologies are subject to consistent emission control requirements. In addition, compliance and enforcement activities would be more efficient and less costly.

D. Change of the Source Category Name

Under today's final rule, EPA is revising the source category list published under section 112(c) of the CAA to add a source category called "Pesticide Active Ingredient Production" and to subsume the 11 initial, separate source categories into that category, as well as to include other identified chemical production processes which are major sources of HAP. All 11 agricultural chemicals on the initial source category list are PAI's; all of the other chemicals identified during data gathering that have been added to the list are also PAI's. Because these other PAI's have been added to the source category list and because they have been grouped with the initial 11 agricultural chemicals, which are also PAI's, the EPA decided that it is appropriate to change the title of this NESHAP source category. Effective by this notice, EPA is changing the title of the source category to "pesticide active ingredient production." This change is appropriate to avoid confusion regarding the definition of the source category and to aid in distinguishing the types of air emission sources addressed by this source category.

II. Background

A. Summary of Considerations Made in Developing This Rule

The CAA was created in part "to protect and enhance the quality of the Nation's air resources so as to promote the public health and welfare and the productive capacity of its population" (CAA section 101(b)(1)). Section 112(b) of the CAA lists 189 HAP believed to cause adverse health or environmental effects. (Through rulemaking, EPA subsequently delisted caprolactam). Section 112(d) of the CAA requires that emission standards be promulgated for all categories and subcategories of major sources of these HAP and for many smaller "area" sources listed for regulation under section 112(c) in accordance with the schedules listed under section 112(c). Major sources are defined as those that emit or have the potential to emit at least 10 tons/yr of any single HAP or 25 tons/yr of any combination of HAP.

On July 16, 1992 (57 FR 31576), EPA published the initial list of categories of sources slated for regulation. As noted above, this list included 10 categories of Agricultural Chemicals Production; with today's final rule, these source categories are combined into a single category called Pesticide Active Ingredient Production, and additional PAI processes are added to the source category. The statute requires emissions standards for the listed source categories to be promulgated between November 1992 and November 2000. On December 3, 1993, the EPA published a schedule for promulgating these standards (58 FR 83841).

In the CAA, Congress specified that each standard for major sources must require the maximum reduction in emissions of HAP that EPA determines is achievable considering cost, health and environmental impacts, and energy requirements. In essence, these MACT standards would ensure that all major sources of air toxic emissions achieve the level of control already being achieved by the better controlled and lower emitting sources in each category. This approach provides assurance to citizens that each major source of toxic air pollution will be required to effectively control its emissions.

Available emissions data show that pollutants that are listed in section 112(b)(1) of the CAA and are emitted in substantial amounts by the PAI production source category include toluene, methanol, methyl chloride, and HCl. The PAI production source category also emits small amounts of other listed pollutants including benzene, benzyl chloride, 1,3-butadiene,

carbon tetrachloride, chloroform, ethylbenzene, ethyl chloride, ethylene dichloride, hexachlorobenzene, hexachlorocyclopentadiene, hexachloro ethane, hexane, methylene chloride, tetrachloroethylene, trichlorobenzene, trichloroethylene, xylenes, acetonitrile, Captan®, formaldehyde, glycol ethers, hydroquinone, methyl ethyl ketone, methyl isobutyl ketone, methyl isocyanate, napthalene, phosgene, chlorine, and hydrogen cyanide. Some of these pollutants have been classified as known, probable, or possible human carcinogens when inhaled, and all can cause reversible and irreversible toxic effects following sufficient exposure. These effects include respiratory and skin irritation, neurological disorders (e.g., dizziness, headache, and narcosis), effects upon the eye (including blindness), damage to organs (e.g., liver, kidney, and testes), and in extreme cases, death. Emissions of these pollutants will be reduced by implementation of today's final rule.

The list of HAP in section 112(b) of the CAA includes 22 HAP compounds (or classes of compounds) that have been reported to be possible endocrine disruptors. Many of these 22 HAP are PAI's, or are used in the production of PAI's, and, thus, could possibly be emitted from PAI manufacturing plants. In a survey of 20 plants producing PAI's, EPA found only one of these 22 HAP in the actual emissions of these plants. The quantity of this one potential endocrine disruptor was very low relative to the total HAP emissions reported at the 20 surveyed plants.

Based on published chemical property data, the vapor pressures of the possible endocrine disruptors tend to be low relative to the solvents and raw materials used in the PAI manufacturing processes (the lower the vapor pressure, the less material that will volatilize). In addition, based on a PAI industry buyer's guide, the possible endocrine disruptors that are also PAI's are each produced by only one or a small number of companies. As a result, the HAP that are possible endocrine disruptors are likely emitted in small quantities, if at all, relative to the HAP listed above. The EPA is implementing a program under the Federal Food Drug and Cosmetic Act and Safe Drinking Water Act to screen pesticides and other chemicals for their potential to disrupt the endocrine system of humans and wildlife. The EPA will assess the risk to humans and wildlife of chemicals identified in this program as endocrine disruptors and take appropriate risk management action. The EPA's risk management strategy could include the development of risk based emission standards under the CAA.

The alternatives considered in the development of this regulation, including those alternatives selected as standards for new and existing sources, are based on process and emissions data received from 20 of the estimated 78 existing facilities that are subject to today's final rule. Regulatory alternatives more stringent than the MACT floor (the minimum control level required by the CAA) were selected when they were judged to be reasonable, considering cost, non-air quality health and environmental impacts, and energy requirements.

Included in today's final rule are methods for determining initial compliance as well as monitoring, recordkeeping, and reporting requirements. All of these components are necessary to ensure that affected sources will comply with the standards both initially and over time. However, the EPA has made every effort to simplify the requirements in the rule. The EPA has also attempted to maintain consistency with existing regulations by either incorporating text from existing regulations or referencing the applicable sections.

Representatives from other interested EPA offices and programs, State environmental agency personnel, and industry participated in the regulatory development process as MACT partnership members. The partnership members were given opportunities to review and comment on the regulation prior to proposal. Industry, regulatory authorities, environ mental groups, and other interested parties provided comment on drafts of the proposed standards and provided additional information during the public comment period.

B. Regulatory Background

Today's final rule implements section 112(d) of the CAA, which requires the Administrator to regulate emissions of HAP listed in section 112(b) of the CAA. The intent of this rule is to protect the public health and the environment by requiring new and existing major sources to reduce generation of emissions by using pollution prevention strategies or to control emissions to the level achievable by the MACT.

In 1994, EPA promulgated National Emission Standards for Hazardous Air Pollutants for Certain Processes Subject to the Negotiated Regulation for Equipment Leaks (59 FR 19587). Processes producing Captafol®, Captan®, Chlorothalonil, Dacthal, and Tordon™ acid that use butadiene, carbon tetrachloride, methylene chloride, or ethylene dichloride as a reactant or process solvent, are subject to the Negotiated Regulation for Equipment Leaks. Today's final rule requires control of leaking components that are currently not subject to the Negotiated Regulation for Equipment Leaks, but that contain and/or transport HAP and are associated with processes in this source category. Today's final rule also allows sources subject to the Negotiated Regulation to comply with the leak detection and repair (LDAR) provisions of this rule.

III. Authority for NESHAP Decision Process

A. Source of Authority for NESHAP Development

Section 112 of the CAA gives the EPA the authority to establish national standards to reduce air emissions from sources that emit one or more HAP. Section 112(b) contains a list of HAP to be regulated by NESHAP. Section 112(c) directs the Agency to use this pollutant list to develop and publish a list of source categories for which NESHAP will be developed; this list was published in the **Federal Register** on July 16, 1992 (57 FR 31576). The Agency must list all known categories and subcategories of "major sources" that emit one or more of the listed HAP. A major source is defined in section 112(a) as any stationary source or group of stationary sources located within a contiguous area and under common control that emits or has the potential to emit in the aggregate, considering controls, 10 tons/yr or more of any one HAP or 25 tons/yr or more of any combination of HAP.

Under section 112(c)(1) of the CAA, the Administrator has the authority to establish additional source categories as appropriate. Ten (revised to 11) categories of agricultural chemicals were included on the initial list. Because the processes, HAP emissions, control technologies, and control costs for these 11 agricultural chemicals are similar to the processes, HAP emissions, control technologies, and control costs for other PAI's, the Administrator included other PAI's on the source category list and grouped the agricultural chemicals and the PAI's together into one source category.

B. Criteria for Development of NESHAP

The NESHAP are to be developed to control HAP emissions from both new and existing sources according to the statutory directives set out in section 112(d) of the CAA. The statute requires the standards to reflect the maximum degree of reduction in emissions of HAP

that is achievable for new or existing sources. This control level is based on the MACT. The selection of MACT must reflect consideration of the cost of achieving the emission reduction, any non-air quality health and environmental impacts, and energy requirements for control levels more stringent than the floor (described below).

The MACT floor is the least stringent level for MACT standards. For new sources, the standards for a source category or subcategory "shall not be less stringent than the emission control that is achieved in practice by the best controlled similar source, as determined by the Administrator" (CAA section 112(d)(3)). Existing source standards can be no less stringent than the average emission limitation achieved by the best performing 12 percent of the existing sources for categories and subcategories with 30 or more sources, or the average emission limitation achieved by the best performing 5 sources for categories or subcate gories with fewer than 30 sources (CAA section 112(d)(3)). The average emission limitation achieved by the best performing sources is termed the "MACT floor," and the "average" is based on a measure of central tendency such as the arithmetic mean, median, or mode.

In establishing the floors for this rulemaking, EPA designed its information collection approach to reduce the paperwork burden on the industry. Rather than collect detailed information from all 78 existing sources, EPA narrowed its detailed collection request. Through literature reviews, State contacts, and plant visits, EPA identified companies which appeared to have the best controlled plants and sent data collection requests only to those companies. In identifying those companies, EPA also considered the need to include a variety of process and product types in the survey. Data for the PAI production industry were collected from 20 facilities that are major sources. In addition, many of those facilities achieve high emissions reductions, produce a variety of PAI's, and use a variety of production processes. As the standards for existing sources are based on the best-performing 12 percent of sources, the number of best-performing sources for this source category is nine facilities (i.e., 12 percent of 78 facilities). The best-performing nine facilities are included in the 20 facilities surveyed.

After the nine best performing sources in the source category were identified, the "average emission limitation achieved" was determined for each of the four types of emission points at these sources. The arithmetic mean was evaluated first for each type of emission point. If this value corresponded with the level of control achieved by a known technology, it was selected as the MACT floor. If the value did not correspond with the level of control achieved by a known technology, the median was evaluated. In all cases where the median was evaluated, it was selected as the MACT floor because it either corresponded with the level of control achieved by a known technology, or it was no control.

IV. Summary of Promulgated Standards

This section describes the source category and pollutants that are regulated, defines an affected source, and summarizes the final standards for each type of emission point. A pollution prevention alternative is also summarized in this section.

A. Source Categories to be Regulated

The final standards regulate HAP emissions from facilities that are major sources and produce PAI's for use in insecticide, herbicide, or fungicide products. These standards apply to existing sources as well as new sources. The final standards for existing and new sources are summarized in Table 1.

TABLE 1.—STANDARDS FOR NEW AND EXISTING PAI SOURCES

Emission source	Applicability	Requirement
Process vents	Existing:	
	Processes having uncontrolled organic HAP emissions ≥0.15 Mg/yr.	90% for organic HAP per process or to outlet concentration of ≤20 ppmv TOC.
	Processes having uncontrolled HCl and chlorine emissions ≥6.8 Mg/yr.	94% for HCl and chlorine per process or to outlet HCl and chlorine concentration of ≤20 ppmv.
	Individual process vents meeting flow and mass emissions criteria that have gaseous organic HAP emissions controlled to less than 90% on or after November 10, 1997.	98% gaseous organic HAP control per vent or ≤20 ppmv TOC outlet limit.
	New:	
	Processes having uncontrolled organic HAP emissions ≥0.15 Mg/yr.	98% for organic HAP per process or ≤20 ppmv TOC.
	Processes having uncontrolled HCl and chlorine emissions ≥6.8 Mg/yr and <191 Mg/yr.	94% for HCl and chlorine per process or to outlet concentration of ≤20 ppmv HCl and chlorine.
	Processes having uncontrolled HCl and chlorine emissions ≥191 Mg/yr.	99% for HCl and chlorine per process or to outlet concentration of ≤20 ppmv HCl and chlorine.
Storage vessels	Existing: ≥75 m^3 capacity and vapor pressure ≥3.45 kPa.	Install a floating roof, reduce HAP by 95% per vessel, or to outlet concentration of ≤20 ppmv TOC.
	New: ≥38 m^3 capacity and vapor pressure ≥16.5 kPa ...	Same as for existing sources.
	≥75 m^3 capacity and vapor pressure ≥3.45 kPa	
Wastewater[a]	Existing: Process wastewater with ≥10,000 ppmw Table 9 compounds at any flowrate or ≥1,000 ppmw Table 9 compounds at ≥10 L/min, and maintenance wastewater with HAP load ≥5.3 Mg per discharge event.	Reduce concentration of total Table 9 compounds to <50 ppmw (or other options).
	New:	
	Same criteria as for existing sources	Reduce concentration of total Table 9 compounds to <50 ppmw (or other options).
	Total HAP load in wastewater POD streams ≥2,100 Mg/yr.	99% reduction of Table 9 compounds from all streams.
Equipment leaks	Subpart H	Subpart H with minor changes, including monitoring frequencies consistent with the proposed CAR.

TABLE 1.—STANDARDS FOR NEW AND EXISTING PAI SOURCES—Continued

Emission source	Applicability	Requirement
Product dryers and bag dumps.	Dryers used to dry PAI that is also a HAP, and bag dumps used to introduce feedstock that is a solid and a HAP.	Particulate matter concentration not to exceed 0.01 gr/dscf.
Heat exchange systems	Each heat exchange system used to cool process equipment in PAI manufacturing operations.	Monitoring and leak repair program as in HON.

[a] Table 9 is listed in the appendix to subpart G of 40 CFR part 63.

B. Pollutants to be Regulated and Associated Environmental and Health Benefits

Pesticide Active Ingredients production facilities emit an estimated 3,850 Mg/yr of organic and inorganic HAP. Organic HAP include methyl chloride, methanol, and toluene as well as other compounds. Hydrogen chloride is the inorganic HAP emitted in the greatest quantities by this industry. The final rule reduces overall HAP emissions from PAI facilities by 65 percent.

Some of these pollutants are considered to be carcinogenic, and all can cause toxic health effects following exposure, including nausea, headaches, and possible reproductive effects. The extent and degree to which the human health effects may be experienced is dependent upon (1) the ambient concentration observed in the area (e.g., as influenced by emission rates, meteorological conditions, and terrain); (2) the frequency of and duration of exposures; (3) characteristics of exposed individuals (e.g., genetics, age, preexisting health conditions, and lifestyle) which vary significantly with the population; and (4) pollutant specific characteristics (toxicity, half-life in the environment, bioaccumulation, and persistence).

Most of the organic HAP emitted from this industry are classified as VOC. The emission controls for HAP will reduce non-HAP VOC emissions as well. Emissions of VOC have been associated with a variety of health and welfare impacts. Volatile organic compound emissions, together with nitrogen oxides, are precursors to the formation of tropospheric ozone. Exposure to ambient ozone is responsible for a series of public health impacts, such as alterations in lung function, changes in lung structure, and aggravation of existing respiratory disease. Welfare impacts from exposure to ambient ozone include damage to selected commercial timber species and economic losses for commercially valuable crops such as soybeans and cotton.

In addition to being listed under section 112(b)(1) for the purposes of this rulemaking, HCl is listed under section 112(r) of the CAA. The intent of Section 112(r), Prevention of Accidental Releases, is to focus on chemicals that pose a significant hazard to the community should an accident occur, to prevent their accidental release, and to minimize consequences should a release occur. Hydrogen chloride, along with the other substances listed under section 112(r)(3), is listed because it is known to cause, or may be reasonably anticipated to cause death, injury, or serious adverse effects to human health or the environment (59 FR 4478, January 31, 1994). Sources that handle hydrogen chloride in greater quantities than the established threshold quantity under section 112(r)(5) will be subject to the risk management program requirements under section 112(r)(7) (58 FR 54190, October 20, 1993).

In essence, the MACT standards mandated by the CAA will ensure that all major sources of air toxic emissions achieve the level of control already being achieved by the better controlled and lower emitting sources in each category. This approach provides assurance to citizens that each major source of toxic air pollution will be required to effectively control its emissions. In addition, the emission reductions achieved by today's final standards, when combined with the reductions achieved by other MACT standards, will contribute to achieving the primary goal of the CAA, which is to "protect and enhance the quality of the Nation's air resources so as to promote the public health and welfare and the productive capacity of its population" (CAA section 101(b)(1)).

C. Affected Sources

The affected source for the purpose of this regulation is the facility-wide collection of PAI manufacturing process units (PAI process units) that process, use, or produce HAP, and are located at a plant site that is a major source, as defined in section 112(a) of the CAA. An affected source also includes waste management units, heat exchange systems, and cooling towers that are associated with the PAI process units. A PAI process unit includes: the processing equipment; connected piping and ducts; associated storage vessels; and components such as pumps, compressors, agitators, pressure relief devices, sampling connection systems, open-ended valves or lines, valves, connectors, and instrumentation systems that are assembled at a facility for the purpose of manufacturing a PAI or integral intermediate.

The final rule specifies that new source requirements apply to an affected source for which construction or reconstruction commenced after November 10, 1997, or to any single PAI process unit that meets the following conditions: (1) It is not part of a process unit group; (2) construction commenced after November 10, 1997; and (3) it has the potential to emit 10 tons/yr of any one HAP or 25 tons/yr of combined HAP. The EPA expects that reconfiguration of processing equipment in a process unit group at an existing source generally will not meet the definition of construction or reconstruction. Therefore, reconfiguration generally will not trigger new source requirements.

D. Compliance Dates

Existing sources must comply within 3 years after June 23, 1999. New or reconstructed affected sources must comply on June 23, 1999 or startup, whichever is later.

E. Process Vent Provisions

The final standards require existing sources to reduce organic HAP emissions from each process with uncontrolled organic HAP emissions greater than or equal to 0.15 Mg/yr. The reduction may be either 90 percent from the sum of all vents within the process or to a total organic carbon (TOC) outlet concentration of 20 parts per million by volume (ppmv). If some vents within a process are controlled to the outlet concentration limits, the 90 percent reduction requirement applies to the sum of uncontrolled organic HAP emissions from all other vents in the process. Additionally, the final rule requires organic HAP emissions from any individual vent that meets certain annual emissions and flowrate criteria to be reduced by 98 weight percent or

to outlet concentrations of 20 ppmv as TOC; the 90 percent requirement would apply to the sum of organic HAP emissions from all other vents in the process. (Those process vents achieving 90 percent control prior to November 10, 1997 are not required to meet the 98 percent control requirement.)

The final standards also require existing sources to reduce HCl and chlorine emissions by 94 percent from each process or to an outlet concentration of 20 ppmv if the sum of uncontrolled HCl and chlorine emissions from all vents in the process is greater than or equal to 6.8 Mg/yr.

New sources are required to meet various process-based control levels. Specifically, for each process where the sum of the uncontrolled organic HAP emissions from all vents in the process is greater than or equal to 0.15 Mg/yr, the final standards require an overall 98 percent reduction in the organic HAP emissions per process. Alternatively, the final standards require that control devices meet outlet concentrations of 20 ppmv as TOC, and the 98 percent reduction requirement applies to the sum of uncontrolled organic HAP emissions from all other vents in the process.

The final standards also require new sources to reduce HCl and chlorine emissions by either a specified percentage or to an outlet concentration not to exceed 20 ppmv. If the uncontrolled HCl and chlorine emissions from the sum of all vents within a process are greater than or equal to 6.8 Mg/yr and less than 191 Mg/yr, the final standards require a reduction of at least 94 percent from the sum of all vents that are not controlled to 20 ppmv. If the uncontrolled HCl and chlorine emissions from the sum of all vents within a process are greater than 191 Mg/yr, the final standards require a reduction of at least 99 percent from the sum of all vents that are not controlled to 20 ppmv.

The final rule also contains an alternative standard for process vents that is similar to the outlet concentration options described above. The initial compliance determination and the monitoring provisions differ from the above outlet concentration options. See section IV.K for additional details regarding the alternative standard.

F. Storage Vessel Provisions

The final standards require both existing and new sources to control organic HAP emissions from storage vessels that have a capacity greater than or equal to 75 cubic meters (m^3) and HAP vapor pressure greater than or equal to 3.45 Kilopascals (kPa). New sources are also required to control organic HAP emissions from storage vessels with capacities greater than or equal to 38 m^3 and less than 75 m^3 and vapor pressure greater than or equal to 16.5 kPa. For all of the affected storage vessels, emissions must be controlled by one of the following methods:

(1) An internal floating roof with proper seals and fittings;

(2) An external floating roof with proper seals and fittings;

(3) An external floating roof converted to an internal floating roof with proper seals and fittings; or

(4) A closed vent system with a control device that is 95 percent efficient or reduces organic HAP to outlet concentrations of less than or equal to 20 ppmv as TOC.

Following comments received on the proposed storage vessel standards, the MACT floor for storage vessels was revised. For the final standards, the storage vessel cutoffs are based on the vessel capacity and the vapor pressure of the stored material rather than the capacity and uncontrolled emissions. See section VI.D for additional information on the changes made to the storage vessel standard.

The final rule also contains an alternative standard for storage vessels that is similar to the outlet concentration options described above. The initial compliance determination and the monitoring provisions differ from the above outlet concentration options. See section IV.K for additional details regarding the alternative standard.

G. Wastewater Provisions

The wastewater provisions are similar to the HON wastewater provisions (subpart G of 40 CFR part 63), except for maintenance wastewater and new source requirements. The final standards require existing and new sources to control Group 1 wastewater streams. Under the final standards, existing and new sources are required to determine Group 1 status for both process wastewater streams and maintenance wastewater streams. A process wastewater stream is a Group 1 stream for compounds listed in Table 9 of the appendix to subpart G of 40 CFR part 63 ("Table 9 compounds") if:

(1) The total annual average concentration of Table 9 compounds is greater than or equal to 10,000 ppmw at any flowrate; or

(2) The total annual average concentration of Table 9 compounds is greater than or equal to 1,000 ppmw and the annual average flow rate is greater than or equal to 10 liters per minute (L/min).

A maintenance wastewater stream is a Group 1 stream if the mass of Table 9 compounds in an individual maintenance wastewater discharge exceeds 5.3 Mg.

The final standards require existing sources with Group 1 process and maintenance wastewater streams for Table 9 compounds to do one of the following:

(1) Reduce the concentration of Table 9 compounds to less than 50 ppmw;

(2) Use a steam stripper with specific design and operating requirements;

(3) Reduce the mass flow rate of Table 9 compounds by at least 99 percent;

(4) Reduce the mass flow rate of Table 9 compounds by an amount equal to or greater than the fraction removed (Fr) value in Table 9;

(5) If a source using biotreatment for at least one wastewater stream that is Group 1 for Table 9 compounds, achieve a required mass removal greater than or equal to 95 percent for Table 9 compounds; or

(6) Treat with permitted Resource Conservation and Recovery Act (RCRA) units or by discharging to a permitted underground injection well.

The final standards require new sources with Group 1 wastewater streams for Table 9 compounds to control Table 9 compounds to the same level required for existing sources. In addition, new sources with a total mass flow rate from the source of 2,100 Mg/yr or more of Table 9 compounds would be required to reduce the mass flow rate of Table 9 compounds from all wastewater streams by 99 percent. This difference from the HON was needed because the MACT floor for new sources is more stringent than the provisions in the HON for facilities that exceed this mass flow rate cutoff.

A source is exempted from the wastewater standards if:

(1) The total mass flow rate of Table 9 compounds in Group 1 streams is less than 1 Mg/yr; or

(2) If the total mass flow rate of Table 9 compounds in untreated Group 1 wastewater streams and in Group 1 wastewater streams that are treated to levels less stringent than the levels required by the standard is less than 1 Mg/yr.

H. Equipment Leak Provisions

Today's final rule contains revisions to the proposed equipment leak requirements that were based on subpart H (of the HON rule). The final rule contains changes to the standards for valves and connectors in gas/vapor service and light liquid service as

follows: the requirement to implement a quality improvement program and all references to 40 CFR § 63.175 have been removed; an allowance for monitoring every 2 years for those processes with less than 0.25 percent leaking valves has been added; an allowance for valve subgrouping was also added; the equation used to determine the percent of leaking valves in a process was changed to eliminate the optional credit for valves removed, and, the rolling average of leaking valves was revised so that it is calculated as an average of the last three monitoring periods for annual or biannual monitoring programs. The monitoring schedule for connectors in gas/ vapor service and light liquid service was also revised to allow for decreased monitoring for those components with the lowest leak rates. If less than 0.25 percent of the connectors in a group of processes are leaking, the monitoring frequency is now once every 8 years. These changes, which are consistent with the proposed consolidated air rule (CAR), are designed to reduce the recordkeeping requirements while achieving the same level of control as under subpart H. The standard for existing sources is based on a regulatory alternative more stringent than the floor, and the standard for new sources is based on the MACT floor for new sources.

I. Bag Dump and Product Dryer Provisions

Under the final standards, particulate matter emissions are not allowed to exceed 0.01 grains per dry standard cubic foot (gr/dscf) from both (1) product dryers that are used to dry a PAI (or integral intermediate) that is also a HAP, and (2) bag dumps that are used to introduce a feedstock that is a solid material and a HAP. The standard applies to both existing and new sources.

J. Heat Exchanger System Provisions

The final standards apply to each heat exchange system that is associated with the affected source. The standards require a monitoring program to detect leakage of organic HAP from the process into the cooling water. The final standards refer to the monitoring program in the HON (§ 63.104 of subpart F).

K. Alternative Standard

As an alternative to the requirements for process vents and storage vessels that are discussed in sections IV.E and F, respectively, the emissions from any process vent may be routed to a control device achieving outlet concentrations of less than or equal to 20 ppmv TOC (calibrated on methane or the predominant HAP) and less than or equal to 20 ppmv HCl and chlorine. Initial compliance with the alternative standard is achieved when the outlet concentrations for TOC are demonstrated using a TOC monitor that meets the requirements of Performance Specification 8 or 9 of appendix B of 40 CFR part 60. Monitoring to demonstrate ongoing compliance is also conducted with the TOC monitor. Initial and ongoing compliance with the alternative standard for HCl and chlorine is achieved when the outlet concentrations are demonstrated using Method 26.

L. Pollution Prevention Alternative

For existing sources, the promulgated rule also includes a pollution prevention (P2) alternative standard that meets the requirements of the MACT standards and can be implemented in lieu of the requirements described above. The P2 alternative standard provides a way for facilities to comply with the MACT standards by reducing overall consumption of HAP from their processes. The two options that were developed are described in Table 2 and are discussed below.

TABLE 2.—ALTERNATIVE P2 STANDARD

Option	Description of P2 option
1	Demonstrate an 85% reduction in the production-indexed HAP consumption factor (kg HAP consumed/kg product produced) from a baseline period.
2	Demonstrate at least a 50% reduction in the production-indexed HAP consumption factor and additional reduction from add-on control to yield overall reduction equivalent to an 85% reduction in the production-indexed HAP consumption factor from a baseline period.

In the first option, an owner or operator can satisfy the MACT requirements for all process vents, storage vessels, equipment leaks, wastewater, and heat exchange systems associated with an existing process by demonstrating that the production-indexed consumption of HAP has decreased by 85 percent from a baseline (certain restrictions are discussed below). The baseline comprises the average consumption and production values averaged over the first 3-year period in which the process was operational, beginning no earlier than the period consisting of the 1987 to 1989 calendar years. Alternatively, for a process that has been operational for less than 3 years, but more than 1 year, the baseline may be established for the time period from startup of the process until the present. The production-indexed HAP consumption factor (HAP factor) is expressed as kilograms (kg) HAP consumed per kg product produced. The numerator in the HAP factor is the total consumption of material, which describes all the different areas where material can be consumed, either through losses to the environment, consumption in the process as a reactant, or some other form of destruction. Consumption, rather than emissions, is tracked because it can be used as a true measure of pollution prevention; any decrease in consumption for the same unit of product generated must involve some type of increase in process efficiency, including reduction of waste, increased product yield, and in-process recycling. Because HAP are used generally as raw materials and solvents in this industry, reductions in consumption can be generally associated with reductions in emissions to air, water, or solid waste.

The second option also uses the production-indexed HAP consumption factor and is also applied to existing processes. This option allows an owner or operator to supplement reductions achieved with P2 with add-on controls. The EPA believes that such an option will provide greater flexibility and cost efficiency to the operators who already may have some add-on controls. Under this option, an owner or operator must demonstrate reductions in the HAP factor of at least 50 percent via P2 measures. In addition, the mass of HAP emissions must be reduced by an amount that, when divided by the production rate and added to the reduction in the HAP factor, yields a reduction equivalent to at least 85 percent of the baseline HAP factor. Thus, the total reduction required by option 2 would be equivalent to or greater than an 85 percent reduction in the HAP factor, the same as in option 1.

The following restrictions also apply to the pollution prevention standards in today's final rule. First, for any reduction in the production-indexed HAP consumption factor that is achieved by reducing a HAP that is also a VOC, an equivalent reduction in the production-indexed VOC consumption factor is required. Second, for any reduction in the production-indexed HAP consumption factor that is achieved by reducing a HAP that is not a VOC, the production-indexed VOC consumption factor may not be increased. Third, particulate matter emissions from product dryers are excluded from the P2 option because

the product is not consumed in the process. Fourth, processes that began operation after November 10, 1997 are not eligible for the P2 alternative. Fifth, the P2 alternative does not apply to HAP that are generated in the process if they are not also added as a raw material or solvent; emissions of these generated HAP must be controlled as specified in the standards for process vents, storage vessels, equipment leaks, and wastewater systems.

Today's final rule also require owners and operators complying with the P2 standard to submit a P2 Demonstration Summary as part of the Precompliance plan that describes how the P2 alternative will be applied at their facilities. The minimum data requirements for the P2 Demonstration Summary are listed in § 63.1364(g)(3) of today's final rule.

M. Emissions Averaging Provisions

Today's final rule includes emissions averaging provisions that are essentially unchanged from the proposed provisions that would allow emissions averaging among process vent, storage vessel, and wastewater emission points within an existing affected source. Under emissions averaging, a system of "credits" and "debits" is used to determine whether an affected source is achieving the required emissions reductions. Emissions averaging allows existing sources the flexibility to achieve compliance at diverse points with varying degrees of control already in place in the most economically and technically reasonable fashion. This flexibility to account for controls already in place is not as justified for new sources because they can and should be designed and constructed with compliance in mind. Therefore, new sources are not allowed to use emission averaging.

N. Initial Compliance and Performance Test Provisions

1. Promulgated Standards

a. *Process Vents.* To determine compliance with the percent reduction requirements for gaseous HAP and HCl emissions from PAI process vents, the owner or operator is required to quantify the uncontrolled and controlled gaseous emissions from all process vents to demonstrate the appropriate overall reduction requirements. For process vents controlled by a device with an inlet of less than 9.1 Mg/yr of HAP, the owner or operator can either test or use mathematical methodologies to determine the uncontrolled and controlled emission rates from individual process vents. For process vents controlled by a device with an inlet of 9.1 Mg/yr or more of HAP, performance tests are required to determine the reduction efficiency of each device.

Performance test provisions were structured to account for the peak-case emissions. The EPA adopted this approach primarily for batch operations, which, because of their cyclic nature, tend to have variable emissions. Continuous processes tend to have more consistent emissions, but for simplicity, the same performance test provisions are applied to controls for continuous processes. This approach essentially considers emissions from continuous processes to be peak-case at all times. Control devices, that have previously been tested under conditions required by this standard, and condensers are exempt from performance testing.

To determine compliance with the outlet concentration standards, the final rule requires the owner or operator to conduct a performance test using the EPA methods specified in the rule under the same peak-case conditions. Today's final rule also specifies procedures to demonstrate initial compliance when using flares.

b. *Storage Vessels.* For demonstrating compliance with the percent reduction requirements for storage vessel emissions, today's final rule requires that the owner or operator conduct either a performance test or a design evaluation. To demonstrate compliance with the 20 ppmv outlet concentration, the final rule requires the owner or operator to conduct a performance test. However, if a control device is shared by storage vessels and process vents, the results of a performance test conducted to demonstrate compliance with the process vent standards may also be used to demonstrate initial compliance with storage vessel standards. For demonstrating compliance with the floating roof equipment standards, the final rule refers to the compliance provisions in the HON. Today's final rule also specifies procedures to demonstrate initial compliance when using flares.

c. *Wastewater.* The wastewater provisions in the final rule remain essentially unchanged from those of the proposed rule. For demonstrating compliance with the various wastewater requirements, owners and operators have a choice of using a specified design, conducting performance tests, or documenting engineering calculations, consistent with the wastewater provisions in the HON. Appropriate inspection, monitoring, reporting, and recordkeeping requirements are included in the regulation via cross-references to the HON.

d. *Equipment Leaks.* To determine compliance with the standard for equipment leaks, facilities must demonstrate that an LDAR program meeting the requirements of the final rule is in use.

e. *Bag Dumps and Product Dryers.* To demonstrate initial compliance with the particulate matter emission limit of 0.01 gr/dscf, the owner or operator is required to conduct a performance test.

2. Pollution Prevention Alternative Standard

To demonstrate initial compliance with the pollution prevention alternative standard, the final rule requires the owner or operator to document yearly quantities of HAP raw materials and products using preapproved material tracking records, including standard purchasing and accounting records, and calculating the baseline HAP and VOC factors. Prior to the compliance date, the final rule requires owners and operators to submit a pollution prevention Demonstration Summary that describes how the pollution prevention alternative will be applied at the facility. The pollution prevention Demonstration Summary provides the regulatory agency an opportunity to review and approve the proposed material tracking procedures. Procedures are also specified in the final rule to demonstrate that the required reductions are achieved by the control devices used to meet option 2.

O. Monitoring Requirements

1. MACT Emission Standards

The final rule requires monitoring to demonstrate compliance on an ongoing basis. This monitoring is done either by (1) continuously measuring emission reductions directly, or (2) continuously measuring a site-specific operating parameter, the value of which is established by the owner or operator during the initial compliance determination. The operating parameter value is defined as the minimum or maximum value established for a control device or process parameter that, if achieved on a daily average by itself or in combination with one or more other operating parameter values, determines that the owner or operator is complying with the applicable emission standards. Except for the bag leak detectors, these parameters are required to be monitored at 15-minute intervals throughout the operation of the control device. For a device controlling streams that, in aggregate, contain less than 0.91 Mg/yr of HAP, only a site-specific

periodic verification that the device is operating as designed is required to demonstrate continuous compliance. Owners and operators must determine the most appropriate method of verification and propose this method to the Agency for approval in the Precompliance plan, which is due 6 months prior to the compliance date of the standard.

Under the final rule, each fabric filter that is used to control particulate matter emissions from a bag dump or product dryer that is subject to the particulate matter standard must be equipped with a bag leak detection system with an alarm to indicate bag leaks or other causes of increased emissions. In addition, the owner or operator must prepare a written operation and maintenance manual that describes inspection and maintenance procedures for these fabric filters. The manual must also include a corrective action plan that describes procedures to diagnose the cause of any alarm as well as corrective actions to be taken to correct malfunctions or minimize emissions. The manual must be submitted to EPA for approval in the Precompliance report. Not initiating the corrective action plan within 1 hour of an alarm is a violation of an operating requirement.

2. Pollution Prevention Alternative Standard

An owner or operator electing to use the pollution prevention alternative can demonstrate ongoing compliance by calculating the rolling average of the HAP and VOC factors for each applicable process or portions of the process. For continuous processes, the rolling average is calculated every 30 days, and for batch processes, the rolling average is calculated every 10 batches. In both cases, the rolling average is based on data from the previous 12 months. In addition, an owner or operator electing to use pollution prevention Option 2 is required to monitor the emission reduction obtained through the use of traditional controls using the methods described above.

P. Recordkeeping and Reporting Requirements

The owner or operator of any PAI production facility subject to these standards is required to fulfill reporting requirements specified in the final rule, as well as requirements outlined in the General Provisions of subpart A to 40 CFR part 63. Table 1 following the regulatory text of today's final rule designates which sections of subpart A apply to the rule. Generally, the recordkeeping provisions require the owner or operator to maintain all records documenting the applicability determinations and indicating that the source is in compliance with the applicable requirements. Required reports under this standard include the Initial Notification of applicability to the standards, the Precompliance report, the Notification of Compliance Status report, and the Periodic reports required after the date of compliance.

V. Summary of Nationwide Impacts

The emission reductions that are required by this regulation could be met by regulated sources using one or more of several different techniques. Impacts were estimated for control scenarios based on traditional control techniques that were judged to be the most feasible for meeting the requirements of the final standards from a technical and cost standpoint. Energy, cost, and economic impacts of the pollution prevention alternative would be equivalent to or lower than the estimated impacts for traditional controls because it is likely that an owner or operator would elect to implement only those pollution prevention techniques that have lower impacts than traditional controls.

A. Air Impacts

The standards are estimated to reduce HAP emissions from existing sources by 2,500 Mg/yr from the baseline level, a reduction of 65 percent from the baseline (i.e., current) emissions level, and 93 percent from the uncontrolled emissions level. These reductions would also occur if facilities elect to implement the alternative pollution prevention standard. In addition to reducing HAP emissions, VOC will also be reduced. This reduction includes both VOC that are HAP and other VOC that are not HAP. Volatile organic compounds are precursors in the atmospheric reaction with oxides of nitrogen that generates tropospheric ozone. The amount of VOC reduction (beyond the HAP portion of the VOC) due to implementation of the PAI standards has not been quantified for this rulemaking. The basis for the estimated emissions reductions is discussed in Chapter 5 of the Basis and Purpose Document and in memoranda in the docket (Docket A-95-20, Docket item numbers III-B-1, IV-B-2, IV-B-3, and IV-B-4).

B. Water and Solid Waste Impacts

With the assumption that overheads from steam stripping will be recoverable as material or fuel, no solid waste is expected to be generated from steam stripping wastewater streams. Additionally, no solid waste is expected to be generated from controls of other emission points.

Under the final standards, wastewater generated from water scrubbers used to control HCl emissions is expected to increase by an estimated 10.8 million liters per year. The volume of wastewater generated would also increase at plants that choose a water scrubber to control certain water soluble organic HAP; however, the increase is expected to be minimal because the use of water scrubbers for this purpose is expected to be uncommon. The basis for the water and solid waste impacts is discussed in the Environmental Impacts memorandum in the Supplementary Information Document in the docket (Docket A-95-20, Docket item number II-B-21).

C. Energy Impacts

Under the final standards, energy use is expected to increase by an estimated 4,880 x 109 British thermal units per year (Btu/yr). The basis for the estimated energy use is discussed in the Environmental Impacts memorandum in the Supplementary Information Document in the docket (Docket A-95-20, Docket item number II-B-21).

D. Cost Impacts

The total control cost includes the capital cost to install control devices (including floating roofs), the costs involved in operating control devices (energy and operating and maintenance costs), costs associated with monitoring control devices to ensure compliance, costs associated with implementing work practices, and the cost savings generated by reducing the loss of valuable product in the form of emissions. Monitoring costs include the cost to purchase and operate monitoring devices, as well as reporting and recordkeeping costs required to demonstrate compliance. Average cost effectiveness, dollars per megaram ($/Mg) of HAP removed, is also presented as part of cost impacts and is determined by dividing the annual cost by the annual emission reduction. The basis for the cost impacts is discussed in the Cost Impacts memorandum in the Supplementary Information Document and in subsequent memoranda in the docket (Docket A-95-20, Docket item numbers II-B-21, IV-B-2, IV-B-3, and IV-B-5).

Under the final standards, EPA estimates that the total capital costs for existing and new sources will be $71.6 million and $10.3 million, respectively (June 1998 dollars). The total annual costs for control at existing and new sources are estimated to be

approximately $39.4 million and $5.47 million, respectively (June 1998 dollars). The average cost effectiveness of the standards is estimated to be about $15,800/Mg for existing sources and $13,400/Mg for new sources.

The EPA estimates that in the first three years following promulgation industry's nationwide annual cost burden will average $304,000/yr for monitoring, recordkeeping, and reporting requirements. Most of these costs are for new and reconstructed sources that must be in compliance upon startup; other costs are for existing sources to prepare initial notifications and plans. In the fourth year after promulgation, existing facilities must begin to record monitoring data and prepare periodic reports, which will significantly increase the nationwide annual burden.

It is expected that the actual compliance cost impacts of the final rule will be less than described above because of the potential to use common control devices, upgrade existing control devices, use other less expensive control technologies, implement pollution prevention technologies, or use emissions averaging. Because the effect of such practices is highly site-specific and data were unavailable to estimate how often the lower cost compliance practices could be utilized, it is not possible to quantify the amount by which actual compliance costs will be reduced. The EPA believes that the overall control costs and the monitoring, reporting, and recordkeeping costs will be substantially reduced for the facilities opting to comply via the pollution prevention option.

E. Economic Impacts

The control costs imposed on producers in the PAI production industry will increase their cost of production. The effects of the changes in production costs are evaluated in the "Economic Impact Analysis of the Proposed NESHAP for the Production of Pesticide Active Ingredients" (Docket A-95-20, Docket item No. II-A-20). This report was not changed as a result of public comments and will serve as documentation for the final rule. The resulting increase in production costs will increase the market price by less than 1 percent and decrease market output by less than 1 percent. In addition, the regulation's impact on foreign competition is relatively small. Social cost incorporates the changes in welfare to consumers, unaffected producers, and foreign producers and consumers to the cost of the regulation. These costs were determined to be negligible for the PAI production industry; therefore, the total social cost is estimated to be equal to the total control cost. No plant closures are expected from compliance with this set of alternatives.

VI. Major Comments and Changes to the Proposed Standards

A. Applicability Provisions

1. Selection of Source Category

The initial list of categories of major and area sources included 10 source categories in the agricultural chemicals industry group. In June 1996, butadiene furfural cotrimer was moved from the polymers and resins industry group to the agricultural chemicals industry group (61 FR 28197). In the notice of proposed rulemaking, EPA made the following additional changes: (1) All active ingredients within the meaning of FIFRA section 2(a) that are used in herbicide, insecticide, or fungicide pesticide end-use products were added to the agricultural chemicals industry group; (2) the individual initial and new source categories in the agricultural chemicals industry group were combined into a single source category; and (3) the new source category was named "pesticide active ingredient production."

The EPA received numerous comments on the change in the source category. Many of the commenters requested exemptions for specific processes or classes of processes. Examples include: antimicrobials; chromic acid and sodium bichromate; chlorine; sodium hypochlorite; kaolin (aluminum silicate); sulfuric acid, particularly from copper smelters; and copper sulfate, from copper refineries and rod mills. The commenters contend that these processes should be exempt because the production processes are significantly different than organic PAI production processes. In addition to differences in the production processes, each commenter cited one or more of the following reasons to support their requests for exemptions: (1) Minimal toxicity of some of the products themselves; (2) the HAP emitted are not organic compounds or HCl, or they are impurities introduced with feedstocks; (3) regulation would achieve minimal environmental benefit but impose significant burden, especially to demonstrate that equipment does not emit HAP; (4) the product is not primarily sold for use as PAI; and (5) the production process is part of another source category that will be regulated by another MACT standard, is part of a delisted source category, or, if not currently listed, would be more logically listed among the categories of inorganic chemicals. Some of the commenters also indicated that sulfuric acid plants will be MACT for copper and lead smelter furnaces.

Some commenters opposed the expansion of the source category because some products are produced synthetically and others are derived from naturally occurring materials. These commenters are also concerned that the proposal did not identify either the number of processes that would be covered or examples of the processes, and that EPA has not ensured that process operation, emission characteristics, control device applicability, and costs are similar. As a result, they contend that the proposed regulation is arbitrary and capricious, is inconsistent with the Clean Air Act and EPA's procedures for developing MACT standards, and defeats the purpose of creating source categories. The commenters suggested limiting the regulation to synthetically produced materials because this would be consistent with the process descriptions presented in the Basis and Purpose document and with the definition of intermediate (i.e., a compound produced in a chemical reaction). These commenters explained that other regulations (e.g., the HON) have recognized this distinction, and many of the compounds derived from naturally occurring materials are not used primarily as PAI's.

One commenter stated that EPA should not further expand the source category beyond that covered by the proposed rule because owners and operators of other processes may not have read the proposal preamble closely enough to realize that EPA was requesting comment on such action. Two commenters supported the scope of the applicability and the definition of PAI.

The reasons for expanding the source category to include PAI's other than those on the initial source category list, and for aggregating them all together in a single source category, are summarized in section I of this preamble. Since proposal, however, EPA reexamined the scope of the source category and determined that the proposed rule included some processes that are not similar to the others. For the final rule, changes were made to narrow the scope of the source category; in addition, for processes that remain in the source category, changes have been made to exempt some processes and to clarify requirements for others. These changes are: (1) A statement has been added to specify that the provisions of the rule apply only to PAI process units that "process, use, or produce HAP"; (2)

the definition of PAI has been changed to mean any organic material that is an active ingredient within the meaning of Federal Insecticide, Fungicide, and Rodenticide Act (FIFRA) section 2(a); and (3) a statement has been added to specify that the provisions of the rule do not apply to the production of ethylene (processes subject to the HON are also exempted, as they were in the proposed rule). Finally, EPA decided not to limit the source category only to production of compounds by chemical synthesis. Each of these decisions is discussed in more detail later in this section. The provision specifying that the rule applies only to PAI process units that "process, use, or produce HAP" has been added to the final rule because EPA did not intend for owners and operators to demonstrate compliance for processes that do not meet this condition. Note, however, that this provision does not automatically exempt process units that do not "emit" HAP; for emission points in such process units, an owner or operator must demonstrate that emissions are less than the applicability thresholds.

The EPA decided to exclude production of inorganic compounds from the source category because: (1) Inorganic PAI's comprise only a small percentage of the total PAI production; (2) many of the inorganic PAI production processes do not use or emit HAP; (3) data are unavailable on the use, emissions, and control of HAP compounds other than organics and HCl; (4) some of the inorganic PAI's are included in other active or delisted source categories; and (5) most of the inorganic PAI's are used primarily for non-pesticidal purposes. In this context, "organic" means any compound that contains carbon and hydrogen with or without other elements. Based on a review of pesticide registration data in 1996, less than 10 percent of the PAI's in pesticide products that are registered as insecticides, herbicides, or fungicides are inorganic compounds. Inorganic compounds comprise a similar percentage by weight based on 1993 consumption data; the top 25 compounds account for nearly half of the total PAI production, and the two inorganic compounds in the group (sulfur and copper hydroxide) account for less than 10 percent of the total.

Of the inorganic PAI processes, only those producing HCl, chlorine, and compounds containing arsenic and chromium are known to use and emit HAP. Both HCl and chlorine production precesses are part of source categories that will be addressed by other MACT standards that are under development. Chromium-based compounds are part of the delisted chrome chemicals source category and thus, EPA agrees with the commenter that they should not also be part of the PAI source category. Data on the existing control levels for arsenic-based compounds are unavailable. In the absence of such data, EPA has decided that production of such compounds should not be part of the PAI source category.

The commenters cited examples of some inorganic compounds that are primarily used for nonpesticidal purposes. The EPA believes there are other inorganic compounds that could be added to this list of compounds used only in minor amounts as pesticides. Conversely, most of the organic compounds are specifically designed as PAI's. Exceptions include ethylene, which has been specifically exempted in the final rule because it is the subject of a MACT standard that is under development, and several compounds covered by the HON such as acrolein, ethylene oxide, napthalene, and propylene glycol.

Production of organic PAI compounds that are derived from natural materials is retained in the source category. Natural materials used as PAI's fall into one of two categories. One category includes materials such as herbs, tobacco dust, dried blood, chitin, putrescent whole egg solids, pyrethrum flowers, cinnamon, sawdust, and ground sesame plant. These compounds are simply harvested or collected and the only processing involves mechanical action. None of these compounds is a HAP. As a result, these processes are not subject to the final rule because the production processes do not process, use, or produce HAP. The second category includes compounds like turpentine that are extracted from natural materials. Extraction processes are not exempted from the final rule because they tend to use large amounts of solvent and have a high potential for emissions. Emissions from extraction processes tend to be more concentrated than emissions from many of the operations in chemical synthesis processes, and they tend to be larger scale operations than extraction operations that are part of a chemical synthesis process. These characteristics make control of extraction processes more cost effective than control of many chemical synthesis processes. However, because the final rule includes a primary use criterion for determining applicability (see section VI.A.2), extraction processes are only subject to the final rule if the product is primarily used as a PAI.

One commenter believes the Captan® process (one of the 10 initial source categories) should not be combined with other PAI processes because it differs from the other processes in a number of ways. According to the commenter, some of the differences are: (1) The process vent flow rate for production of the intermediate is much lower than the process vent flow rate for the active ingredient production, which leads to differences in the complexity and cost of the control devices; (2) the Captan® process has both volatile organic HAP and particulate HAP emissions; and (3) the cost to control carbon disulfide emissions would be much higher than the modeled costs.

The EPA disagrees with the commenter's assertion that the Captan® process (and the associated intermediate process) should be considered separately from other PAI processes. The EPA assumed the intermediate is an integral intermediate. As a result, the intermediate process and the Captan® process are separate processes, both of which are subject to the final rule. Although the flow rates of the intermediate and Captan® process vent streams differ, the flow rates and other process vent stream characteristics for both processes are well within the range of characteristics for process vent streams at other surveyed PAI facilities. These differences were accounted for in EPA's impact analysis by using different models to represent the two processes.

In addition, although the Captan® process itself emits both particulate HAP (i.e., the Captan® product) and a gaseous organic HAP, carbon disulfide, the two pollutants are emitted from different vents. The particulate emissions from product dryers also are considered to be a separate type of emission point like process vents or storage vessels. The fact that this facility is the only one of the MACT floor facilities to have HAP emissions from product dryers is not considered a significantly unique characteristic. It is analogous to the fact that some of the other plants have HAP storage vessel emissions or wastewater discharges and are subject to the specific standards for these emission points, where other plants are not. Finally, EPA believes the cost impacts analysis is correct. Carbon disulfide can be controlled with many of the same control devices that are used to control other organic HAP. If incinerated, the resulting sulfur dioxide (SO_2) emissions can be controlled using scrubbers comparable to those used to control HCl emissions. A detailed discussion of the cost analysis is provided in section VI.O.2. Therefore, EPA believes the Captan® process is not sufficiently different from other PAI processes to warrant development of a

subcategory or a separate source category.

2. Designation of Affected Source

At proposal, the affected source was defined as the facility-wide collection of process vents, storage tanks, waste management units, heat exchange systems, cooling towers, equipment identified in § 63.149 of subpart G, and equipment components (pumps, compressors, agitators, pressure release devices, sampling connection systems, open-ended valves or lines, valves, connectors, and instrumentation systems) in PAI manufacturing operations at a major source of HAP emissions. The EPA received several comments on the affected source. The comments focused on the following issues: (1) Definition of terms, (2) limiting applicability to processes where the primary product is a PAI, and (3) limiting applicability to processes where the product is primarily used as a PAI.

a. *Definitions.* Two commenters requested changes in the definition of the affected source and in the terms used to describe the affected source. One commenter requested that the definition of "pesticide active ingredient manufacturing operations" exclude waste management units because these units are not subject to the standards but instead are used to comply with the standards, and typically they are not dedicated to a particular production process. In addition, the commenter expressed concern that the proposed definition could be interpreted to require compliance with new source standards at an existing waste management unit simply because a new and major PAI manufacturing operation is built that will contribute wastewater to the unit.

The second commenter believes the definition of affected source needs to be revised to include not only the emission points, but also the process unit and emission control technologies. The commenter recognizes that the definition in the proposed rule is similar to the definitions in other MACT standards, but the commenter has recently realized that it is too narrow. For example, in determining whether changes constitute "reconstruction," the changes must cost more than half as much as building a new similar affected source. However, under the proposed rule, the affected source included only process vents, not the reactors, distillation units, or other process equipment of which the vent is a part. Similarly, it included valves and connectors on process piping, but not the piping itself. The commenter also contended that the cost of installing emission controls is a legitimate part of the cost of building a new affected source, but to consider that cost in the reconstruction analysis, emission control technologies must be included in the definition of the affected source.

The EPA made several changes to the definition of affected source and related terms to respond to the comments and to clarify the terms. One change was to remove much of the language from § 63.1360(a) because it is included in the definition of other terms in § 63.1361. Another change was to eliminate the term "PAI manufacturing operations" because it is redundant with the definition of the affected source. In its place, the term "PAI process unit" is used to describe the process and all related equipment used to produce a single PAI or integral intermediate. The EPA agrees with the commenter that the equipment and piping within a process are components of an affected source that should be considered in the fixed capital cost analysis for determining whether changes constitute reconstruction. For the final rule, these items have been included, along with most of the items on the list of equipment in the proposed definition of the affected source, in the definition of the "PAI process unit."

The EPA also agrees with the commenter that waste management units should not be considered part of the PAI manufacturing operations or, in the final rule, part of the PAI process unit. However, waste management units are not used to comply with the standards; they are a type of emission point for which standards are developed. Therefore, waste management units are considered part of the affected source in the final rule. This change makes the final rule consistent with other MACT standards and allows the waste management units to be considered in reconstruction analyses.

Finally, the commenter's conclusion regarding the application of new source requirements is correct. If a new PAI process unit meets the requirements for new source applicability, then the waste management units associated with that new PAI process unit would have to meet the requirements for new sources. If the owner or operator wants to discharge to existing waste management units, they must meet the requirements for new sources. The practical impact of this requirement, however, is expected to be minimal because the requirements for new sources and existing sources are identical except when the HAP load to the waste management units exceeds 2,100 Mg/yr. Based on survey data from the industry, no single existing PAI process unit discharges wastewater with such a high load (and only one facility discharges wastewater containing that much HAP).

The EPA disagrees with the commenter's assertion that control devices should be a component of an affected source for the purposes of determining reconstruction costs. The preamble to the General Provisions cites EPA's policy on this issue, which was originally stated in the preamble to a December 16, 1975 regulation that deals with modification, notification, and reconstruction requirements under 40 CFR part 60. That preamble states, "Costs associated with the purchase and installation of air pollution control equipment (e.g., baghouses, electrostatic precipitators, scrubbers, etc.) are not considered in estimating the fixed capital cost of a comparable entirely new facility unless that control equipment is required as part of the process (e.g., product recovery)" (40 FR 58416, December 16, 1975).

b. *Primary Product.* Two commenters urged EPA to specify, as in other MACT standards, that a process (or process unit) is subject to the rule only if its primary product is a PAI. Both commenters believe this determination is needed when processing equipment periodically is reconfigured to produce different products. In addition, one of the commenters believes it is needed when multiple products are produced by a given process unit. This commenter also believes it is needed when a facility makes a change that is intended to be permanent because the commenter could not find any provision in the proposed rule that would allow such a process unit to be exempt from the rule if they stop making a PAI. The commenters believe the primary product determination would help manufacturers determine which rules apply and would result in regulation of processes that produce a given product under only one, most appropriate MACT standard. One commenter suggested that the primary product be defined as the one with the greatest annual design capacity on a mass basis. The other commenter noted that a simple way to define applicability is to specify that if a process unit stops making a PAI, the PAI rule no longer applies.

Another commenter interpreted the proposed rule to mean that the rule would apply whenever a PAI is produced. If a facility uses non-dedicated equipment, the commenter realized that this could mean that other rules would apply when the equipment was reconfigured to produce a different

product (e.g., the proposed pharmaceuticals rule used the same language). The commenter believes that complying with two standards for the same equipment would be confusing. Therefore, the commenter suggested that the PAI rule apply only when 50 percent or more of the annual production from the equipment is a PAI, or that EPA allow a facility to comply only with the most stringent rule that would apply to the equipment, regardless of the configuration or the product being produced.

In response to the comments EPA evaluated several options for including a primary product determination. The analysis considered two types of situations. The first situation consists of processing equipment that produces only one PAI, produces different PAI's at different times, or simultaneously produces coproducts (one of which is a PAI). The second situation involves processing equipment that produces different products periodically, and some of the products are not PAI's.

For the first situation, EPA determined that a primary product determination is not needed. This conclusion is obvious for equipment that only produces PAI's because no other rule could apply (because compounds subject to the HON are exempted from today's final rule). The analysis is more complicated if a PAI is produced as a byproduct or is produced in minor quantities relative to some other product of the process. The EPA is not aware of any such situations. However, if such processes exist, they may already be subject to the HON, in which case they are exempted under § 63.1360(d) of today's final rule. The only other standard that might apply to such a process in the future is the Miscellaneous Organic NESHAP (MON). The MON will cover a wide variety of compounds in many different industries. Thus, EPA believes that a process unit producing a PAI, even if the PAI is not the primary product, has more in common with other PAI process units than with process units that will be subject to the MON. Therefore, EPA also believes it is more appropriate to regulate all such process units under today's rule rather than the MON.

The EPA considered four options for defining the applicability of the rule to equipment periodically used to produce chemicals other than PAI's. The first option is no change from proposal (i.e., no primary product determination). The second option is to include all equipment used to produce different products in a "process unit group," and always comply with the regulation that applies to the primary product for the group, regardless of what product is being produced. The third option is to define applicability of the rule based on the primary product of the process unit. The fourth option is similar to Option 2, except that the applicable rule for the process unit group could, under certain circumstances, be a rule other than the one for the primary product of the group.

Under option 1, a PAI process unit exists whenever a PAI is being produced, when there is no primary product determination, and when the owner or operator must comply with the PAI standard for each PAI process unit. This option was rejected because, as the commenters noted, it has the undesirable effect of requiring an owner or operator to comply with a different regulation each time the feedstock changes or the equipment is reconfigured to make a different type of product.

The second option is to lump all non-dedicated equipment into one or more "process unit groups" and require the owner or operator to comply with the rule that applies to the primary product within the group. A variation on this option would be to require compliance at all times with the most stringent rule that would apply to any of the individual process units within the group. This option was rejected because the promulgated pharmaceuticals standard does not include a provision that would allow an owner or operator to elect to comply with today's final rule when a pharmaceutical is produced in a process unit group that has a PAI for the primary product. The variation also was rejected because it would be difficult to implement; the most stringent regulation would vary depending on the mix of different types of emission points at a given facility and could require mixing and matching different requirements from different rules that apply to the various emission points.

The third option would specify that the rule apply only if the primary product of the process unit is a PAI. This option was rejected because it does not solve the problem of equipment being subject to multiple regulations. A process unit is defined only by the product it makes. If the raw materials are changed or the equipment is reconfigured to make a different product, the result is a different process unit. An exemption for a process unit when it no longer produces a PAI would be meaningless because, by definition, a change in product creates a different process unit. In other words, it is not possible to make a permanent change in the primary product of a process unit because a given process unit cannot have more than one primary product.

The fourth option, like the second option, includes the concept of process unit groups. This option requires compliance with today's final rule for all PAI process units within the group, except for the following situations. One exception is that the owner or operator may elect to comply with another existing MACT standard for any PAI process unit(s) if the primary product of the process unit group is subject to the other standard on June 23, 1999 or the date of startup of the process unit group, whichever is later. Thus, PAI process units within a group, even if the PAI is not the primary product for the group, are subject to this standard unless and until the process unit group is subject to another MACT standard that covers the primary product of the group. This option also allows the owner or operator to elect to comply with the pharmaceuticals standard for any PAI process unit(s) if any of the products produced in the process unit group are subject to the pharmaceuticals standard. Thus, pharmaceutical manufacturing process units within a group that are covered by the pharmaceuticals MACT may comply with those standards even if a PAI is the primary product of the group. This provision is included because the pharmaceuticals rule does not have a provision that would allow an owner or operator to comply with the PAI rule while producing a pharmaceutical product when the primary product of the group is a PAI. However, two provisions in the pharmaceuticals rule are not applicable when producing a PAI. First, the process vent emission limit of 0.15 Mg/yr in the PAI rule applies instead of the 2,000 lb/yr limit in the pharmaceuticals rule because the 2,000 lb/yr cutoff would not be consistent with the MACT floor for PAI process vents. Second, the owner or operator of a new source that will produce PAI's as well as pharmaceuticals must comply with all of the requirements regarding application for approval of construction or reconstruction in § 63.5 of the General Provisions; the exclusions in § 63.1259(a)(5) of the pharmaceuticals rule do not apply. Again, EPA believes this change is necessary to avoid disparate treatment of PAI producers. The fourth option was selected because it simplifies compliance by allowing an owner or operator to comply with only one regulation for a process unit group. It accomplishes this goal without sacrificing emission reductions because the requirements of the rules are similar.

It also does not require that an existing regulation be amended.

Under the fourth option, the primary product of a group is defined as the product (e.g., a PAI, pharmaceutical, HON chemical, or currently unregulated chemical) with the highest estimated operating time or total production rate for the 5 years after the compliance date for today's final rule or after startup of the process unit group, whichever is later. The owner or operator proposes the number of groups and the boundaries of each group based on site-specific operation, but a group may only include equipment that is or may be used with equipment that is used to produce a PAI (i.e., some equipment must overlap between the PAI process unit and some other process unit for all equipment in both process units to be part of the same group).

c. *Primary Use.* Two commenters believe the rule should only apply to production of materials that are primarily intended to be used as PAI's. One of the commenters noted that for some chemicals registered as PAI's, only a small percentage of the total product is sold for use as a PAI.

Since proposal, EPA has evaluated four options for determining applicability of process units that produce a product for use both as a PAI and other purposes. Option 1 is to require no primary use determination (i.e., no change from proposal). Option 2 is to list, in the rule, compounds that are registered as PAI's but that would not be subject to the rule based on determinations that their primary use nationwide is not as a PAI. Option 3 is to require site-specific determinations of primary use. Option 4 is to list, in the rule, all PAI's that are subject to the rule.

Option 1 would encompass the most process units and would therefore achieve the greatest environmental benefit. The EPA rejected this option, however, because it could result in inequitable regulatory treatment of a given type of process unit. For example, one facility might produce a compound for multiple purposes, including a small amount for use as a PAI, but other facilities produce the same compound exclusively for other purposes. Under this option, only the facility producing a small amount of the compound for use as a PAI would be subject to the rule even though otherwise identical to the other facility.

Under option 4, a list of PAI's subject to the regulation would be included in the regulation. Compounds for which the primary use is the collective non-PAI purposes would be excluded from the list. This option was rejected because it would not accommodate changes in the industry. This is a dynamic industry with new compounds being developed and registered as PAI's every year. Between 1984 and 1995, the industry added an average of 14 new compounds per year, although not all of these new compounds would meet the definition of organic PAI subject to regulation under this rule. As a result, updating the list every year would be impractical. Another disadvantage to this option is that EPA's pesticide reregistration process is not yet complete. Presumably, compounds with incomplete evaluations would be included on the list. The list then would have to be amended periodically to delete compounds whose registrations are canceled.

Option 2 was rejected because, like option 4, it would not automatically accommodate changes in the industry; the rule might have to be amended periodically to exempt new compounds that are primarily used for non-PAI purposes. Another concern with option 2 is that it would be difficult to ensure that the list is accurate and complete.

The final rule adopts option 3, which requires site-specific determinations of primary use. This option was selected for several reasons. First, this approach is likely to result in a given process being subject to only one, most appropriate regulation because EPA is not aware of any compounds for which the primary use is as a PAI for one facility but not others. Furthermore, EPA does not expect the primary use at a given facility to vary. However, if the primary use changes to non-PAI purposes, today's final rule will still apply to the process unit (based on EPA's "once-in, always-in" policy); if the primary use changes to a PAI, today's final rule will apply only if the process unit is not already subject to the HON. A second advantage of this option is that it automatically accommodates new compounds that are developed in the future, and existing compounds that are found to have a pesticidal application. A third advantage is that minimal additional recordkeeping and reporting is required. Manufacturers are required under FIFRA to record and report the annual production of each PAI that they produce; today's final rule requires that they also record and report the total production to demonstrate that the compound is produced primarily for non-PAI purposes. Finally, the pharmaceuticals rule provides a recent precedent for including a primary use provision.

The final rule incorporates the primary use concept in the definition of PAI process unit. Specifically, a process unit is considered to be a PAI process unit if more than 50 percent of the material produced is used as a PAI or integral intermediate. The primary use is determined based on the projected annual production from the process unit in the 3 years after June 23, 1999 or startup, whichever is later.

3. Recovery Devices

One commenter requested that EPA clarify the applicability of recovery devices that are used for multiple processes when the recovered material from a PAI process is used in a non-PAI process. In the proposed rule, the term recovery device had the same meaning as in the HON, but it should have been used only in connection with the wastewater provisions. The MACT floor for process vents is based on the concept that certain condensers are part of the process (i.e., process condensers) and any other add-on devices are considered to be control devices; the concept of recovery devices as in the HON does not apply to process vents. For the final rule, the term recovery device has been revised to include only devices used with water streams, and to specify that equipment based on gravity separation may be a recovery device only if all of the inlet streams are two-phase liquid streams. The material recovered in a recovery device may be used in any process, including non-PAI processes.

4. Intermediates

Under the proposed rule, the affected source would include manufacturing of any intermediate that is integral to a PAI production process and for which more than 50 percent of the annual production of the intermediate is used in the on-site production of PAI's. An integral intermediate process was defined as a process manufacturing an intermediate that is used in the onsite production of PAI's and is not removed to storage before being used to produce the PAI(s). An intermediate was defined as a compound produced in a chemical reaction that is further processed or modified in one or more additional chemical reactions to produce a PAI. The proposed rule would also allow an owner or operator to elect to include production of the following intermediate processes in the affected source: (1) Integral intermediates for which less than 50 percent of the intermediate is used in the onsite production of PAI's and (2) isolated intermediates. "Isolated intermediates" were defined as intermediates that are removed to storage before being used in the on-site production of PAI's.

Several commenters addressed the definitions of different types of intermediates and their inclusion in the definition of affected source. One commenter recommended editorial changes to clarify the meaning of affected source. Another commenter stated that the term "isolated intermediate" should not be used because it has a different meaning under Toxic Substances and Control Act (TSCA), and different definitions for the same term would cause confusion. Another commenter stated that the rule needs to include a definition for "storage" to clarify which intermediate processes are integral. Other commenters believe the proposed rule combined integral intermediate production with PAI production in a single process, which, as described further in section VI.C.1, differs from the approach used to develop the MACT floor.

The intent of the proposed rule was to consider each integral intermediate process to be a separate process within the affected source, and to allow the owner or operator to elect to include any other intermediate process in the affected source. To improve the clarity of these provisions, EPA made several changes in the final rule. The first change was to include the production of integral intermediates in the definition of the new term "PAI process unit," as described in section VI.A.2.a. This change clarifies that production of each integral intermediate is a separate process unit. The second change was to delete the term "isolated intermediate" to eliminate possible confusion with the term as it is defined under TSCA. The impact of this change was minimal because the term was only used in the proposed rule to describe intermediates that are not integral intermediates. The third change was to replace the term "integral intermediate process" with the term "integral intermediate" and change the definition to mean an intermediate for which 50 percent or more of the annual production is used in the onsite production of one or more PAI's and is not stored before being used in the production of another integral intermediate or the PAI(s). For the purposes of this definition, an intermediate is stored if it is discharged to a storage vessel and at least one of the following conditions is met: (1) The processing equipment that discharges to the storage vessel is shutdown before the processing equipment that withdraws from the vessel is started up; (2) on average, the material is stored in the storage vessel for at least 30 days before being used to make a PAI; or (3) the processing equipment that discharges to the storage vessel is located in a separate building or processing area of the plant than the processing equipment that uses material from the storage vessel as a feedstock, and control equipment is not shared by the two processing areas. Processes that satisfy any of these conditions are considered to be significantly distinct and separate. The fourth change was to clarify the provisions allowing the owner or operator to elect to include any intermediate process in the affected source. The final rule specifies that an owner or operator may elect to designate production of any intermediate that does not meet the definition of integral intermediate (and is not otherwise exempted) as a PAI process unit in the affected source. See section VI.C.1 for a discussion of integral intermediates in the development of the MACT floor.

5. Determining New Source Status

Under the proposed rule, an addition of PAI manufacturing operations at an existing plant site would be subject to the requirements for a new source if it had the potential to emit 10 tons/yr or more of any HAP or 25 tons/yr or more of any combination of HAP, unless the Administrator establishes a lesser quantity at a plant that currently is an affected source. Two commenters questioned whether this meant that a source with minor actual emissions but major potential to emit could elect to accept a federally enforceable "synthetic minor" operating permit with an emission limit below the 10 and 25 tons/yr cutoffs, and thereby avoid the new source requirements for process vents, storage vessels, and wastewater.

The new affected source provisions have been revised for the final rule. As noted above, the term "PAI manufacturing operations" has been removed from the final rule. The phrase "unless the Administrator establishes a lesser quantity at a plant that currently is an affected source" is not included in the final rule because this statement is redundant with section 112(c)(1) of the CAA, and the term "addition" was determined to be ambiguous. To address these concerns, the final rule specifies that new source requirements apply to an affected source for which construction or reconstruction commenced after November 10, 1997, or to any single PAI process unit that meets the following conditions: (1) It is not part of a process unit group; (2) construction commenced after November 10, 1997; and (3) it has the potential to emit 10 tons/yr of any one HAP or 25 tons/yr of combined HAP. Thus, if an owner or operator elects to accept federally enforceable conditions that limit the potential to emit for a single PAI process unit that is added to an existing facility to levels below these thresholds, the PAI process unit would be subject to existing source standards, not new source standards.

6. Startup, Shutdown, and Malfunction

For batch processes, the proposed rule would require an owner or operator to comply with the provisions in the rule during periods of startup and shutdown; periods of malfunction would be regulated according to § 63.6 of the General Provisions. For continuous processes, the proposed rule specified that only § 63.6 of the General Provisions would apply during periods of startup, shutdown, and malfunction.

One commenter agrees that routine startups and shutdowns between batches should be covered by the rule, but stated that it should not apply during other startups and shutdowns because normal emission control techniques may be inappropriate or ineffective during those times. According to the commenter, some of the other situations include (1) initial startup of a process unit, (2) startup after a malfunction or an extended period of nonoperation, and (3) shutdowns due to a malfunction. The commenter explained that during initial startup, control devices and monitoring systems need to undergo "shakedown" and debugging, and may need time to reach their full efficiency. After an extended downtime, process equipment also will need time to get back to normal operating conditions, and control devices will need to reach operating temperatures or equilibrium. Although the commenter understands that the proposed rule would not apply during malfunctions, the requirements during a shutdown associated with the malfunction were not clear.

The commenter also stated that the final PAI MACT standards should not incorporate § 63.6(e) of the General Provisions for four reasons. First, the requirement in § 63.6(e)(3)(i)(A) to minimize emissions "at least to the levels required by all relevant standards" is ambiguous. Second, the General Provisions do not address shutdowns of compliance equipment such as control devices. Third, the General Provisions do not address startups, shutdowns, and malfunctions that affect only a portion of the process. Fourth, the General Provisions do not say how to deal with periods of nonoperation. To address these concerns, the commenter recommended that the rule have self-contained startup,

shutdown, and malfunction provisions patterned after those in the HON.

Another commenter recommended that EPA consider revising the rule to allow batch processes with air pollution control equipment to comply with the startup, shutdown, and malfunction requirements in § 63.6(e) of the General Provisions. The commenter explained that operating practices for controls used with batch processes are the same as those for controls used with continuous processes: for both types of processes, operators verify that all control equipment is on-line and functioning properly to minimize emissions at all times (consistent with § 63.6(e)(1)(i) of the General Provisions). Furthermore, the commenter stated that maintenance and corrective actions after a malfunction of a control device are the same for both batch and continuous processes. Therefore, the commenter recommended that EPA consider revising the rule to include the following language: "For batch processes with air pollution control equipment, startup, shutdown, and malfunction shall be regulated according to § 63.6 of subpart A of this part. For batch processes without air pollution control equipment, the provisions of this subpart shall apply during startup and shutdown, and periods of malfunction shall be regulated according to § 63.6 of subpart A of this part."

The EPA has reconsidered the applicability of the rule during periods of startup and shutdown and determined that the requirements of the rule should not be applied under certain situations for batch processes as well as for continuous processes. For batch processes, these situations include initial startups of new or reconstructed processes, and shutdowns that are not part of intended operation (e.g., for maintenance, replacement of equipment, or other repair, possibly as a result of a malfunction). These are times when the operators may be unfamiliar with the equipment operation or it may not be possible to follow standard operating procedures. However, a startup after maintenance, after switching to a product that has been produced in the past, or the startups between batches during a campaign are all routine, normal operating conditions that should result in the same emissions profile. Similarly, shutdown at the end of a campaign, between batches, or for planned, preventive maintenance are all normal operations with the same emissions profile. Conversely, for continuous processes, startup and shutdown for any reason results in operation under conditions different from the normal steady-state operation. To account for these differences between batch and continuous processes, the final rule provides definitions for startup and shutdown that differ from the definitions in the General Provisions. Specifically, the following definitions have been added to the rule:

Startup means the setting in operation of a continuous PAI process unit for any purpose, the first time a new or reconstructed batch PAI process unit begins production, or, for new equipment added, including equipment used to comply with this subpart, the first time the equipment is put into operation. For batch process units, startup does not apply to the first time the equipment is put into operation at the start of a campaign to produce a product that has been produced in the past, after a shutdown for maintenance, or when the equipment is put into operation as part of a batch within a campaign. As used in § 63.1363, startup means the setting in operation of a piece of equipment or a control device that is subject to this subpart.

Shutdown means the cessation of operation of a continuous PAI process unit for any purpose. Shutdown also means the cessation of a batch PAI process unit or any related individual piece of equipment required or used to comply with this part or for emptying and degassing storage vessels for periodic maintenance, replacement of equipment, repair, or any other purpose not excluded from this definition. Shutdown does not apply to cessation of a batch PAI process unit at the end of a campaign or between batches (e.g., for rinsing or washing of equipment), for routine maintenance, or for other routine operations.

The EPA has also clarified in the final rule that the provisions can apply to processing equipment, as well as control, monitoring, and recordkeeping equipment. Additionally, in response to the commenter's concerns regarding ambiguity of the General Provisions, EPA has replaced the reference to the General Provisions with language from the HON that specifically clarifies applicability of provisions during startup, shutdown, and malfunction events.

7. Overlap With Other Standards

Several commenters stated that, in addition to the exemptions provided in the proposed rule, the rule must also address overlap with other regulations. Commenters identified potential overlap with new source performance standards (NSPS) in 40 CFR part 60 (e.g., subparts Kb, III, NNN, and RRR), NESHAP in 40 CFR part 61 (e.g., subparts BB, FF, and G), and RCRA equipment leak requirements. The commenters suggested using language similar to that in § 63.110 of the HON for provisions dealing with process vents, storage vessels, and wastewater and language from § 63.160(b) through (d) to address overlapping provisions that deal with equipment leaks.

The EPA agrees with the commenters that the rule must address overlap with other regulations. The final rule includes language similar to that in § 63.110 of the HON, thus addressing the overlap with NSPS requirements for storage vessels in subpart Kb of 40 CFR part 60 and RCRA requirements in 40 CFR parts 260 through 272. The EPA also added a provision specifying that an owner or operator subject to both this rule and the equipment leak requirements in subpart I of 40 CFR part 63 may elect to comply with the requirements of either rule.

The requirements in NSPS subparts III, NNN, and RRR apply to individual vents, whereas the process vent standards in today's final rule apply to the sum of all process vents within a process. As a result, a facility generally must comply with both today's final rule and any applicable NSPS. One exception is provided in the final rule. If an owner or operator elects to reduce emissions from a process vent by 98 percent (or implement an equivalent control option), then the owner or operator is required to comply only with the provisions of today's final rule.

The final rule does not address overlap with NESHAP in 40 CFR part 61. Subparts BB and FF regulate emissions from benzene production, which, because it is subject to the HON, is not subject to today's rule. Subpart G is reserved and also is not covered in § 63.110 of the HON.

B. Compliance Dates for New Sources

Several commenters addressed the provision in the proposed rule that would require new sources to be in compliance upon startup. One commenter believes the provision should be revised to require compliance by initial startup or the promulgation date of the rule, whichever is later. Other commenters believe EPA should either allow new sources a period of up to 6 months to complete any required testing after startup, or change the definition of startup to stipulate that startup is not complete until all required performance testing is complete, and that this testing must be completed no later than 6 months after steady state production for continuous processes, or

until 6 months after a successful batch production run has been completed.

A provision requiring that new sources be in compliance by initial startup or the promulgation date, whichever is later, is consistent with other MACT standards and has been added to the final rule.

The EPA does not believe that the compliance date needs to be changed to accommodate required emissions testing. Under the proposed rule, an owner or operator would be required to submit the Notification of Compliance Status report no later than 150 days after the compliance date (i.e., startup for a new source). This requirement is consistent with other MACT standards (e.g., the HON, Polymers and Resins (P&R) I, and P&R IV), and it is nearly the requested 6 months after the compliance date. Furthermore, much of the required work (e.g., the emissions profile) may be completed before the compliance date. The amount of time needed to reach steady state production or to complete a successful batch production run should not be greater in this industry than in other chemical production industries. Therefore, the final rule retains the provision to submit the Notification of Compliance Status report no later than 150 days after the compliance date.

C. Process Vent Provisions

1. MACT and MACT Floor

Several commenters requested that sources be able to use process vents meeting the criteria for 98 percent control in determining 90 percent overall process control requirements. Commenters stated that the EPA determined that the MACT floor was 90 percent on a processwide basis and excluding these vents increases the stringency of the floor.

The MACT floor was determined to be 90 percent control for process vents at existing sources. In addition to the MACT floor, the EPA is required to develop regulatory alternatives beyond the floor and to select MACT based on the cost effectiveness of these alternatives. A regulatory alternative was developed that would require 98 percent control efficiency for specific vents that meet the flow and annual uncontrolled emissions criteria described in § 63.1362(b)(2)(iii); and would require 90 percent control efficiency for the sum of emissions from all other vents within the process. The cost of the regulatory alternative was judged to be acceptable, and this alternative was selected as MACT. The EPA agrees that this requirement is more stringent than the floor. If a vent that must be controlled to 98 percent is included in determining 90 percent control for all process vents within the process, the owner or operator would only be complying with the MACT floor, not the more stringent regulatory alternative. Thus, the final rule does not allow an owner or operator to use process vents that are subject to the 98 percent control requirement when determining compliance with the 90 percent overall control level.

Two commenters perceived an inconsistency that they believe should be resolved. The commenters pointed out that in the proposed standards, integral intermediate processes are combined with PAI processes to define a single "process," but they were evaluated separately in the MACT floor analysis. One commenter further noted that this change would result in an increase in the applicability cutoff of the MACT floor because part of the emissions from an intermediate process should be combined with the active ingredient process with the lowest uncontrolled emissions that were used to establish the applicability cutoff of 0.15 Mg/yr.

The discussion in section VI.A.4 explains that the intent in the proposed rule was to consider production of integral intermediates and active ingredients to be separate processes. As the commenters noted, this is also the approach used to develop the MACT floor. However, in reexamining this approach since proposal, EPA realized that some of the active ingredient processes at the surveyed facilities included production of intermediates; in addition, some of the reported intermediate processes may satisfy one of the criteria for storage and thus not be integral intermediates. If all of the intermediates are integral intermediates, the floor would increase to 92 percent. If none of the intermediates are integral intermediates, the floor would decrease to 88 percent. Thus, EPA considers the proposed floor of 90 percent control to be appropriate. The applicability cutoff also is unchanged because the active ingredient production and intermediate production are not combined into a single PAI process unit.

Several commenters requested that the definition of a Group 1 process vent be revised to include an uncontrolled emissions concentration cutoff of 50 ppmv and a flow rate cutoff of 0.005 standard cubic meters per minute. Several commenters also requested changing the applicability cutoff in this definition. Some commenters suggested the applicability cutoff should be based on "total resource effectiveness," as in the HON. The commenters asserted that these changes would provide incentives for sources to implement pollution prevention practices.

Some commenters suggested raising the applicability cutoff to 2,000 lb/yr to be consistent with the cutoff in the proposed pharmaceuticals rule; the commenters asserted this change was needed because the amount of available data on PAI processes was limited. Another commenter suggested raising the applicability cutoff to 10,000 lb/yr because this is the minimum value that was determined to be cost effective in the Batch Processes Alternative Control Techniques (Batch ACT) document. One commenter requested either a higher threshold for a process as a whole or for the individual process entities that comprise the Captan® process.

One commenter also noted that in many cases, controls on processes with small HAP emissions were added to control odors or VOC. The commenter disagreed with EPA's assertion during Partnership Group meetings that the CAA does not allow the Agency to consider the reason controls were added. The commenter states that there is no statutory limitation on how EPA defines "affected source"; for example, EPA has already provided exclusions in § 63.1360, and a higher applicability cutoff could be another.

The EPA disagrees with the suggestions to change the definition of "Group 1 process vent" because these changes would be inconsistent with the MACT floor. The suggested concentration and flow rate cutoffs are inconsistent because the MACT floor was based on the sum of emissions from all vents within a process, not the characteristics of an individual vent. However, for the final rule, EPA did change the definition of "process vent" to exclude streams with HAP concentrations less than 20 ppmv. Although concentration data are not available from the surveyed plants, streams with such low concentrations are likely to be uncontrolled because 20 ppmv is considered to be the practical limit of control (Docket No. A-79-32, Docket item No. II-B-31). Furthermore, such streams are likely to have low annual emissions and, thus, have little impact on the applicability determination for a process.

The EPA attempted to collect information on the best controlled facilities in the PAI industry; EPA believes that the best controlled facilities are contained in its PAI data base and that the processes contained in the data base are representative of the industry. Based on the PAI data base, many processes with uncontrolled emissions that were significantly less

than the cutoffs mentioned by the commenters were controlled to levels of 90 percent or greater. Because the emission cutoffs mentioned by the commenters were not supported by the process vent data, these cutoffs would not have been defensible because they would have been less stringent than the cutoff prescribed by the MACT floor.

Regarding the comment that the cutoff for processes is not cost effective and that other cutoffs that have been demonstrated as cost effective should be provided, EPA notes that there is no provision in the amended CAA for consideration of cost-effectiveness in setting the MACT floor. Therefore, it is conceivable that the standards, which are set based on the practices of the industry, will require a level of control that is greater than what was determined to be cost-effective for other CAA programs. For example, the 10,000 lb/yr cutoff contained in the draft Batch ACT that was referenced by the commenters was intended to simplify applicability of presumptive reasonably available control technology (RACT) control measures, which are applied to the reduction of criteria pollutants (in this case, VOC) and can include the consideration of cost effectiveness.

Finally, the amended CAA contains no provisions for considering reasons why certain processes are controlled and others are not when determining the group of sources that will make up the best 12 percent of the source category. Therefore, the issue of facilities controlling HAP for odor control or other purposes is not a consideration in setting the floors.

One commenter asserted that the applicability equation used to determine which vents must be controlled to 98 percent is inappropriately applied to batch processes. The commenter explained that the flow rate used in the computer model to develop the 98 percent applicability regulatory alternative in the Batch ACT is a constant flow rate, which is inconsistent with batch processing.

In the Batch ACT, EPA developed costs for an incinerator to estimate the cost effectiveness of controlling emissions from batch process vents. Although flow rates from batch processes vary, the control device must be capable of handling the maximum flow rate possible. Therefore, the incinerator was sized and costed for the maximum flow rate, even though venting from batch processes will include periods of lower flow rates.

2. HCl Standards

Two commenters expressed concern that EPA's approach to determining the MACT floor for the HCl emission limit criteria (e.g., the 6.8 Mg/yr cutoff) in the proposed rule considers only a limited number of process vents emitting HCl which may not be representative of the entire source category. The commenters recommend that EPA consider setting the HCl cutoff for existing sources at least as high as the average of the two lowest HCl emission rates from controlled processes at the MACT floor facilities (i.e., (6.8 Mg/yr + 11.0 Mg/yr)/2 = 9.0 Mg/yr), or that the control device for the process vent emitting HCl meet a minimum 90 percent efficiency if installed and in operation before November 7, 1997. (Note: EPA assumes the commenter meant the proposal date of November 10, 1997.) The commenters believe these changes will improve incentives for pollution prevention, and that allowing 90 percent control would reduce the cost burden on existing facilities because retrofitting to achieve an incremental improvement in control is very expensive.

The EPA disagrees with the commenters that the proposed cutoff for HCl emissions is inappropriate. As described in the Basis and Purpose document and summarized below, EPA believes the cutoff of 6.8 Mg/yr is a very clear and obvious breakpoint. Also, even though the MACT floor plants have fewer processes with HCl emissions than organic HAP emissions, this is representative of the industry as a whole. Thus, one would expect that the HCl floor would be based on less data than the floor for organic HAP emissions. The EPA also notes that if the floor were determined by evaluating the best controlled processes throughout the industry rather than the processes at the best performing 12 percent of existing facilities, that the applicability cutoff might be lower than 6.8 Mg/yr. It certainly would not be higher.

To develop the MACT floor for the proposed rule, all of the processes at the nine MACT floor facilities were ranked by uncontrolled HCl emissions. All processes with uncontrolled emissions below 6.8 Mg/yr were uncontrolled, and processes with higher emissions were controlled to various levels. Therefore, the MACT floor was determined to be no control for processes below this threshold and 94 percent for processes above it.

The EPA believes there is no basis for setting a cutoff at 9.0 Mg/yr or for setting a control level of 90 percent for control devices installed before November 10, 1997. Because the MACT floor consists of both a control efficiency and a cutoff, the cutoff cannot be changed independently of the control efficiency. A cutoff of 9.0 Mg/yr would be inappropriate because it is not associated with the determined MACT floor control efficiencies. Furthermore, it would not make sense to include one controlled process (i.e., the process with emissions of 6.8 Mg/yr) with all of the uncontrolled processes; this is a very clear and natural cutoff. If the standard were based on an alternative more stringent than the floor, the rule might allow emission points that are already controlled to the level of the MACT floor to comply with that level (as was done for organic emissions from process vents). However, there is no basis for a 90 percent control level, regardless of the installation date, because the 94 percent control level for HCl is the MACT floor. Finally, the EPA recognizes that the incremental cost effectiveness will be high for a facility with control just below the required level. However, this would be true no matter where the level was set.

Other commenters stated that the HCl standards for new sources should be set at 99 percent removal for consistency with the HON requirements. One commenter stated that since there is no actual test data from the pesticide manufacturing industry demonstrating a 99.9 percent removal of HCl, a change to 99 percent would provide consistency with HON rule requirements.

The EPA agrees with the commenters. The proposed control level was based on a value reported by a surveyed facility. This value was not supported by test data or other documentation. However, a control level of at least 99 percent is likely for this scrubber because HCl control levels of 99 percent are widely accepted as achievable by scrubbers, and several other facilities reported this level. Therefore, for the final rule, the required control level for new sources has been changed to 99 percent. Although being consistent with the HON is not a priority, this change, as one commenter observed, does make the two rules consistent.

3. Surge Control Vessels and Bottoms Receivers

One commenter opposes the proposed requirement to regulate surge control vessels and bottoms receivers as process vents because it introduces a third way to regulate such emissions under the MACT standards. The commenter would prefer that these emissions be regulated as equipment leaks, as under the HON. If that is not acceptable, the commenter's second choice is to regulate the emissions as storage vessels, as under Polymers & Resins IV. The commenter believes that additional inconsistency is confusing and likely to

lead to inadvertent compliance mistakes.

The EPA notes that there is essentially no difference between regulating emissions from these equipment as "equipment leaks" (as in subpart H) versus as "storage vessels" (as in subpart G). Both the applicability and control requirements for these sources in the HON are identical. The reason EPA departed from this approach in the proposed (as well as the pharmaceuticals rule) rule is that surge control vessels and bottoms receivers typify the processing equipment, in capacity and function, found in the PAI and pharmaceuticals industries. Especially in the case of batch processing (where the HON does not regulate process vents), the characteristics of emission streams from these equipment are not significantly different than any other equipment. Emission streams from bottoms receivers and surge control vessels result from the displacement of saturated gases from incoming materials. Displacement emissions are very common in both the pharmaceuticals and PAI industries. Therefore, EPA decided to regulate them in a manner consistent with the remainder of processing equipment found in these industries.

In response to the commenter's concern about possible confusion from the inconsistent application of requirements across different source categories, EPA believes that the consistent treatment described above will actually eliminate a great deal of confusion in the implementation of the rule, because all equipment associated with a process will be treated in the same manner, and the control requirements, which are process based, can be evaluated over all equipment in the process. Additionally, because of the similarities of these equipment with other process vessels, the confusion related to defining a surge control vessel or bottoms receiver from another process vessel will also be averted.

D. Storage Vessel Provisions

1. MACT Floor

Under the proposed rule, the MACT floor for storage tanks consisted of applicability cutoffs and a control efficiency for tanks that exceeded the cutoffs. To develop the floor, the storage tanks at the best performing 12 percent of facilities (the "MACT floor facilities") were ranked by decreasing uncontrolled emissions. The tanks were divided into two groups based on an uncontrolled emissions cutoff below which the median control efficiency was no control. The median control efficiency below 108 kg/yr was no control; the median control above the cutoff was 41 percent. A tank size cutoff was established at 38 cubic meters (m^3) based on the smallest tank with uncontrolled emissions greater than 108 kg/yr that was controlled at least to 41 percent. For new sources, the smallest tank with the best level of control was determined. The floor for new sources was determined to be 98 percent control efficiency for storage vessels with capacity of 26 m^3 or greater and uncontrolled emissions of at least 0.45 kg/yr.

One commenter stated that the control levels originally provided by the commenter for two storage vessels are inaccurate due to incorrect coolant temperatures used by the commenter. The commenter stated that the impact of this change is that the existing source MACT floor based on the median control level for tanks with uncontrolled emissions greater than 108 kg/yr becomes 21 percent, instead of 41 percent. Another commenter stated that MACT floor should be revised to include consideration of vapor pressure of the stored HAP to be a primary parameter.

The EPA has corrected the control efficiencies for each of the storage vessels mentioned by the commenter. The EPA also reexamined the data base since proposal and removed several vessels that should not have been included because they do not meet the definition of storage vessel. Changes to the storage vessel data base, and changes to the MACT floor and the final standard that are summarized below are discussed in the memorandum "Explanation of Options for Reevaluating the Storage Tank MACT Floor for the Production of Pesticide Active Ingredients NESHAP," (Docket A-95-20, Docket item No. IV-B-2).

The proposed approach to developing the MACT floor for storage vessels was significantly different than the approach used to develop the floor for other rules (e.g., the HON, polymers & resins, and pharmaceuticals). Since proposal, EPA has reevaluated the revised data base and determined that an approach consistent with that used for the other rules is feasible and appropriate for this rule. One of the commenters also recommended that the floor include vapor pressure cutoffs as in other rules. As a result, EPA decided to revise the MACT floor. The revised approach established vapor pressure cutoffs at the same storage vessel capacity cutoffs and control efficiency cutoffs as were used in the previous rules. Specifically, the approach examined storage vessel cutoffs at 38 m^3, 75 m^3, and 151 m^3. (In English units, these capacities correspond with 10,000 gallons [gal], 20,000 gal, and 40,000 gal, respectively, and the data base includes at least one storage vessel at each of these sizes.) Within these size ranges, the vapor pressure cutoff at which the majority of storage vessels were controlled to 95 percent or more was determined; the 95 percent level is consistent with the efficiency of floating roofs, which are the most cost effective controls.

Under the revised approach, at liquid vapor pressures of 3.45 kPa and higher, the median control efficiency was found to be at least 95 percent in both the 75 m^3 and larger range and the 151 m^3 and larger range; at all vapor pressures, the majority of storage vessels with capacities smaller than 75 m^3 were found to be uncontrolled. The vapor pressure of 3.45 kPa is the vapor pressure of toluene, which is the predominant HAP in the industry and the most common organic HAP stored in storage vessels. Therefore, the revised MACT floor for storage vessels at existing sources was determined to be 95 percent control for storage vessels with a capacity greater than or equal to 75 m^3 that store material with a vapor pressure greater than or equal to 3.45 kPa. In addition, the MACT floor was determined to be no control for all storage vessels with a capacity less than 75 m^3.

The MACT floor for storage vessels at new sources is based on the best controlled storage vessel. As discussed above, the best level of control for storage vessels is considered to be 95 percent. The capacity of the smallest vessel controlled to 95 percent was determined to be 40 m^3, and the vapor pressure of the compound stored in this vessel was 16.5 kPa. The MACT floor for new sources must be at least as stringent as the floor for existing sources. Therefore, the MACT floor for new sources is 95 percent control for storage vessels with (1) a capacity of 40 m^3 or greater that store material with a vapor pressure of 16.5 kPa or greater and (2) a capacity of 75 m^3 or greater that store material with a vapor pressure of 3.45 kPa or greater.

2. Standard

Under the proposed rule, one regulatory alternative more stringent than the floor was developed. The regulatory alternative would require 95 percent control of storage vessels with capacity of 75 m^3 or greater that have uncontrolled emissions of 108 kg/yr or greater. Storage vessels smaller than 75 m^3 (and greater than 38 m^3) that have uncontrolled emissions of 108 kg/yr or

greater would require control to the floor level (41 percent). This regulatory alternative was determined to be cost effective. Therefore, the proposed standard for storage vessels at existing sources was established at 95 percent control for vessels with a capacity greater than or equal to 75 m^3 that have uncontrolled emissions greater than or equal to 108 kg/yr. No regulatory alternatives more stringent than the MACT floor were developed for storage vessels at new sources. Therefore, the proposed standard for storage vessels at new sources was determined to be 98 percent control efficiency for storage vessels with a capacity of 26 m^3 or greater with uncontrolled HAP emissions of at least 0.45 kg/yr.

Several commenters requested that EPA increase the lower emission cutoff for existing and new storage vessels. Most commenters recommended increasing it to at least 227 kg/yr; this level corresponds to the level in the Batch Processes ACT document for which manifolding to an existing control device was shown to be cost effective. One commenter suggested adding an exemption in § 63.1360(d)(4) for such storage vessels. Several of the commenters also noted that combustion would be the only feasible means of controlling HAP emissions of only 0.45 kg/yr, and that secondary emissions would increase significantly as a result.

The Agency has determined that including the higher cutoff suggested by the commenter would have been less stringent than the cutoff prescribed by the MACT floor. The emission cutoffs mentioned by the commenters are not supported by the storage vessel data base.

Since proposal, a different method for estimating the MACT floor has been incorporated (as discussed above). The revised MACT floor uses storage vessel capacity and the vapor pressure of stored material as the parameters for determining applicability for storage vessels, and no uncontrolled emissions cutoff is included in the floor. The Agency expects that implementing standards based on this format will be considerably easier than implementing the proposed standards, because no ongoing emission tracking will be required to demonstrate compliance with the standard. Use of these parameters is consistent with requirements for storage vessels in other rules.

Two commenters stated that the minimum applicability size cutoff for existing Group 1 storage vessels should be changed to correlate with the NSPS subpart Kb size cutoff to simplify compliance. The commenters stated that the cutoff for storage vessels at existing sources would change from 38 m^3 to 40 m^3. In addition, the commenters pointed out that the 38 m^3 cutoff is below the smallest storage vessel controlled to the median control efficiency in the study (i.e., 39 m^3).

For the final rule, EPA based the standards for new and existing sources on the MACT floor because the cost to go beyond the floor was determined to be unreasonable. As a result of the changes to the database discussed above, the capacity cutoffs in the final rule are higher than the cutoffs suggested by the commenters. For existing sources, the cutoff is 75 m^3 instead of the 40 m^3 suggested by the commenters. For new sources, the cutoff is 40 m^3 instead of the 39 m^3 suggested by the commenters.

One commenter pointed out that in both the definitions of Group 1 Storage Vessel (§ 63.1361) and the standard (§ 63.1362), the conversion from metric units to English units are rounded off. The commenter requests that EPA provide a more precise conversion to English units. In an effort to reduce confusion over the conversion from English to metric units (or vice versa), only metric units have been included in the final rule.

One commenter requested that EPA keep the existing source standard for storage vessels with capacities greater than 75 m^3 the same as that for smaller storage vessels, unless floating roof technology is already in-place. The commenter asserted that the EPA's "beyond the floor" standard of 95 percent organic HAP control for existing "large" storage vessels is not justified for storage vessels that were not already equipped with floating roof technology. The commenter stated that EPA's assumption that any existing storage vessel larger than 75 m^3 can be cost-effectively retrofitted with a floating roof is unrealistic.

For the proposed rule, the MACT floor was based on a control efficiency of 41 percent. As discussed above, the revised MACT floor is based on 95 percent control. The final standards also are based on a control of 95 percent because the cost to control to a higher level was determined to be unreasonable. Now that both the MACT floor and the standard are based on the same control efficiency, the commenter's concern about going beyond the floor is no longer relevant.

Several commenters stated that EPA should allow floating roofs as a control option for storage vessels at new sources. Some of the commenters stated that it is possible to reduce emissions of some HAP by 98 percent using a floating roof, with the efficiency calculated using TANKS3, EPA's computer program to calculate VOC emissions from storage tanks.

As noted above, the control level for storage vessels at new sources is 95 percent under the final rule. Floating roof technology is allowed to meet this limit, just as it is for existing sources.

3. Routine Maintenance

Several commenters requested either an extension in the 240 hours per year (hr/yr) allowance for routine maintenance or greater flexibility in its application. One commenter suggested that EPA allow up to a 30-day extension for control devices (like RCRA incinerators) that require more than 10 days of maintenance per year, or allow a facility to compensate for longer downtime by overcontrolling at other times (this would also require a change in the compliance averaging period—see section VI.M.1). Other commenters recommended that the 240 hr/yr be allowed for each PAI process unit that is created using the non-dedicated equipment because maintenance may be required prior to each campaign. Alternatively, one commenter suggested that, based on standard maintenance work practices, the startup, shutdown, and malfunction requirements in subpart A of part 63 should be allowed in lieu of the proposed 240 hr/yr allowance. The commenter stated that the standard work practice for many companies is to isolate all equipment upstream of control devices where planned maintenance will occur to eliminate all safety hazards to personnel and minimize any impact to the environment. One commenter supported the provision, but suggested it be expanded to cover controls for waste management units, controls used on equipment leaks, and recovery devices (if applicable).

The proposed 240 hr/yr for planned routine maintenance was mistakenly applied to all control devices in the proposed rule; it should only have been applied to storage vessels. The startup, shutdown, and malfunction provisions prohibit the shutdown of control devices during operation; however, EPA recognizes that for storage vessels, it is impossible to "not operate" (i.e., not have breathing losses) during a period of time in which an add-on control device would be undergoing planned maintenance. Therefore, EPA has in the final rule allowed an amount of time in which the control devices for storage tanks only can be nonoperational due to planned routine maintenance. All other situations (i.e., those that require unplanned, emergency maintenance)

should be addressed through the startup, shutdown, and malfunction provisions. This change makes the final rule consistent with other MACT standards. The rationale for the 240 hr/yr allowance is that EPA determined that routine maintenance for certain control devices may require up to 10 days to complete, and because this timeframe is consistent with State permitting activities (see 59 FR 19441 for a more detailed discussion of this time allowance).

E. Equipment Leak Provisions

The proposed rule would have required compliance with the provisions of subpart H; this requirement was based on a regulatory alternative more stringent than the MACT floor. However, commenters contended that the data used to justify the program (e.g., the leak rates) were not representative of the PAI industry, and they supplied data which contain a sampling of LDAR program results from numerous types of facilities, including SOCMI and polymer and resins manufacturing facilities. These data indicate that initial equipment leak frequencies and, thus, the potential for emissions from leaking components, may be significantly lower than those assumed in the original development of subpart H. The commenters also contend that the monitoring costs were underestimated. One commenter cited the following specific examples based on a quote from a monitoring contractor: (1) initial and annual monitoring costs should be at least $4.50/component and $2.95/component, respectively, instead of $2.50/component and $2.00/component; and (2) labor costs should be at least $30.00/hr, not $22.50/hr.

In recent regulatory development efforts involving similar industries, EPA has generally found equipment leaks to be a significant source of emissions. In general, EPA's approach has been to require industries to identify leaks and fix them as soon as possible. The EPA is sensitive to the recordkeeping burden associated with an LDAR program for this industry and has strived to minimize the number of activities that have to be conducted and documented while still requiring sources to identify and eliminate equipment leaks. Relative to earlier rules, the Agency developed the HON to focus most of the recordkeeping and reporting burden on those processes and types of equipment that have the most significant leaks, in terms of HAP emissions. Since the development of the HON, the Agency has proposed the CAR that is designed to minimize the reporting and recordkeeping burden even further (63 FR 57748, October 28, 1998). The EPA believes that, in addition to consolidating many LDAR programs, the CAR addresses many concerns regarding the burden placed on industry to implement LDAR programs with little environmental benefit. The proposed CAR is specifically focused on identifying and fixing leaking components, and leaves out many of the recordkeeping requirements that are focused on nonleakers. Therefore, EPA decided to determine the impacts of a standard consistent with the LDAR program in the proposed CAR.

The EPA does not consider the emission estimates in the original analysis to be invalid. However, for the revised analysis, EPA used the leak rate data provided by the commenters and other recently obtained data to determine a lower bound on the baseline emissions (and a corresponding upper bound on cost effectiveness for a given set of assumptions regarding subsequent leak frequencies and the number of monitoring instruments that are needed). Most of the data provided by the commenters were from facilities in the SOCMI or polymers and resins industry. The EPA also combined recently obtained initial leak rate data for components in pharmaceuticals processes with the data provided by the commenters. These data were combined because EPA believes pharmaceuticals processes are at least as representative of PAI processes as are SOCMI or polymers and resins processes due to the prevalence of batch processing, similar process equipment, and similar HAP in the pharmaceuticals and PAI industries.

For the revised analysis, emissions and costs were estimated for the same two model PAI processes that were developed for the original analysis. Uncontrolled emissions for the model processes were estimated based on averages of the initial leak rates that were obtained from the commenters and for pharmaceuticals processes. Controlled emissions were estimated based on assumed average leak rates over a monitoring cycle after implementation of the provisions in the proposed CAR. For valves and connectors, the average leak rates were assumed to be equal to one-half of the performance level (i.e., one-half of 0.25 percent); for pumps, average leak rates were assumed to be equal to one quarter of the initial leak rates (i.e., one-half of the occurrence rate, where the occurrence rate is assumed to be equal to one-half of the initial leak rate).

Since proposal, EPA has reviewed the cost analysis and updated costs for the monitoring instrument. The original analysis was based on costs for a monitor that is no longer available. Capital costs for a currently available monitor that is widely used are higher than the capital costs in the original analysis, but maintenance costs are lower. As a result, the new monitor has a lower total annual cost. The EPA also reviewed the monitoring costs, repair costs, and other factors used in the costing methodology and determined that no changes were warranted. The EPA believes the contractor costs cited by a commenter are higher than the values used in the EPA analysis because they include overhead and capital recovery costs, whereas these are all separate cost items in the EPA analysis.

Two approaches were evaluated in the revised cost analysis. The first approach pro-rated the cost of the monitoring instrument based on the ratio of the number of components in the model processes to the number of components that a fully utilized instrument could be used to monitor (i.e., about 9,000 components). This approach assumes facilities will use a given instrument to monitor multiple PAI processes or PAI processes as well as other processes that also are, or will be, subject to similar LDAR requirements. The cost-effectiveness of the revised analysis was determined to be $1,400/Mg of HAP removed. A second, more conservative approach is to assume monitoring instruments are dedicated to the PAI process(es) at each facility. Thus, one instrument was assumed for facilities with less than 9,000 components, and two or more were assumed for surveyed facilities that have more than 9,000 components. This approach raises the cost-effectiveness to $1,800/Mg. Additional information about the revised cost analysis is provided in the docket (Docket A–95–20, Docket Item No. IV–B–3).

Because both of these cost effectiveness values are considered to be reasonable, EPA revised today's final rule to make it consistent with the CAR. This change makes the final rule consistent with the Agency's recent efforts toward consolidation of equipment leak requirements for air regulations. It also increases the focus on processes with leaking components by reducing the monitoring, recordkeeping, and reporting requirements for processes with nonleaking components.

Most of the changes since proposal involve the requirements for valves and connectors. These changes include: extending the monitoring period from once every four quarters to once every 2 years for process units with less than

0.25 percent leaking valves, adding provisions for valve subgrouping, extending the monitoring period for connectors with low leak rates, deleting both the quality improvement program implementation requirement and the credit for valves removed, and revising the calculations for determining the percentage of leaking valves. The Agency believes that the equipment leak requirements included in today's final rule greatly reduce the administrative burden associated with LDAR recordkeeping and reporting, and at the same time, result in a significant reduction in emissions. Based on the leak rates reported by the commenters, EPA believes the affected sources will be able to take advantage of the provisions extending the monitoring periods.

F. Wastewater Provisions

1. Maintenance Wastewater

Several commenters stated that maintenance wastewater streams should either be excluded from the regulation or subject to the same requirements as in § 63.105(b)(2) of the HON. All of the commenters cited the variability and unpredictable nature of maintenance wastewater streams (which makes it difficult to determine whether a stream is Group 1 or Group 2) and the low potential for substantial emissions (because such streams are typically due to rinsing or flushing equipment) as reasons to regulate maintenance wastewater differently. One commenter added that maintenance wastewater streams cannot be controlled like process wastewater streams. For example, the commenter explained that trying to pump the small amount of water generated when bleed lines or pumps are drained would cause equipment problems if there was not enough flow to keep material running through the pump itself. This commenter also stated that the cost to comply with conveyance requirements would be enormous, especially if an enclosed system has to be connected to every piece of equipment because a maintenance wastewater stream might be generated there.

The EPA considered the comments and is persuaded by the commenters' arguments that the variability of maintenance activities makes characterization of these wastewater streams difficult, and that there is fairly low potential for substantial emissions from most of these wastewater streams. However, EPA has no data on typical quantities of maintenance wastewater generated, or the characteristics of these wastewater streams. Therefore, EPA's approach in resolving this issue was to specify characteristics of maintenance wastewater streams that have significant emission potential. The EPA also sought to minimize the burden of characterization of all maintenance wastewater streams. Based on this approach, EPA evaluated three possible options for regulating maintenance wastewater. The first option was to adopt the same requirements as in § 63.105 of the HON, which is the option suggested by the commenters. The EPA believes that maintenance wastewater streams may warrant a different treatment in this industry than what was done under the HON because the PAI industry is expected to generate process wastewater streams in discrete batches, due to the batch nature of the industry. These process wastewater streams are expected to have properties similar to those for maintenance wastewater streams in terms of the quantities generated, the frequency of generation, and the options for management, suppression, and treatment. Therefore, for streams with significant emissions potential, whether generated because of maintenance activities or by the process operations, EPA believes that proper management and treatment is warranted.

The second option evaluated was to require the same management and treatment for both maintenance and process wastewater, as in the proposed rule. Under this option, the applicability thresholds are the same as in the HON for both types of streams. However, because information on maintenance wastewater streams is unavailable, it is not clear how many such streams would be subject to management and treatment requirements. In addition, it is possible that industry would be required to characterize numerous maintenance wastewater streams with no environmental benefit. Another concern with this option is the extent of dedicated maintenance wastewater conveyance systems that will need to meet emission suppression requirements on the chance that a Group 1 maintenance wastewater stream might be discharged in the processing area served by that part of the conveyance system. Because one of the applicability thresholds for Group 1 streams is 10,000 ppmw at any flow-rate, it is possible that there is a high potential for many maintenance wastewater streams to meet Group 1 applicability criteria. However, even though streams may be concentrated (e.g., greater than 10,000 ppmw HAP), the emission potential also depends on the quantity of water generated. Because the flow rate applicability criterion for 10,000 ppmw streams is unlimited, this option does not consider emission potential.

The third option considered and incorporated into the final rule is a modification of option 2 that does not require characterization, suppression, and treatment of small maintenance wastewater streams with low emission potential. The HON includes two thresholds for triggering Group 1 applicability: the first, which has already been discussed, captures any streams with greater than 10,000 ppmw HAP load and does not consider emissions potential; the second applicability threshold, however, considers emission potential by adding a quantity (greater than 10 L/min) in addition to the HAP concentration (1,000 ppmw HAP). When converted to a HAP load, the second applicability threshold is equivalent to approximately 5.3 Mg of HAP. This load was used as the applicability threshold in the definition of maintenance wastewater in the final rule. The wastewater definition in the final rule also applies to individual discharge events resulting from maintenance activities, not the sum of all events occurring from a single point of determination (POD) over the course of a year. By defining wastewater in this manner, only the largest, most significant maintenance wastewater streams would be subject to suppression and treatment. These large streams should be easier to identify and may occur only at certain POD's. The definition of Group 1 wastewater also includes maintenance wastewater streams with this same load; thus, there are no Group 2 maintenance wastewater streams, and there is no burden to characterize and track any maintenance wastewater streams other than Group 1 streams.

It is conceivable that there are no maintenance wastewater streams in the industry with characteristics approaching this definition. However, because EPA has no data on the quantities or characteristics of these maintenance wastewater streams, EPA believes the best approach is to define a threshold of concern rather than to exempt from suppression and treatment all maintenance wastewater streams.

2. Treatment Options

Several commenters requested that the enhanced biological treatment option in the proposed pharmaceuticals MACT standard be included in this rule (i.e., for wastewater that contains soluble HAP and less than 50 ppmw of partially soluble HAP) for discharges to a privately owned treatment works

(POTW). According to one commenter, the HON provisions essentially preclude discharge to POTW's because owners or operators of POTW's could not reasonably be expected to understand, implement, and certify compliance with this regulation. Furthermore, the commenter stated that the detailed analysis performed for the proposed pharmaceuticals rule indicated that air emissions for certain wastewater streams would be negligible; thus, there is no need to "ban" discharge to POTW's.

Except for minor differences in applicability cutoffs, one of the treatment options in the HON (and thus in the proposed rule) is similar to the enhanced biotreatment option under the proposed pharmaceuticals rule. Both the HON and the proposed pharmaceuticals rule regulate two groups of HAP compounds in wastewater. For the HON, the groups are called "list 1" and "list 2" compounds. For the proposed pharmaceuticals rule, they are called "partially soluble HAP" and "soluble HAP." All 52 of the compounds on list 2 are also classified as partially soluble HAP. List 1 contains all 14 soluble HAP as well as the 10 remaining partially soluble HAP. (Note that for the final pharmaceuticals rule, epichlorhydrin has been moved from the solubles list to the partially solubles list.) Under the HON, an owner or operator is exempt from the performance test requirement if wastewater is treated in an enhanced biological treatment process, and compounds on list 1 comprise at least 99 percent by weight of the HAP compounds (list 1 plus list 2) in the wastewater. Under the proposed pharmaceuticals rule, an owner or operator would be exempt from the performance test requirement if wastewater containing soluble HAP and less than 50 ppmw of partially soluble HAP is treated in an enhanced biological treatment unit, and the owner or operator demonstrates that less than 5 percent of the soluble HAP is emitted from the municipal sewer system. The definition of an enhanced biotreatment unit also is the same under both rules, and waste treatment units that qualify as enhanced biotreatment units are subject to the same compliance requirements under both rules. Therefore, EPA disagrees with the commenter's assertion that the treatment provisions in the proposed pharmaceuticals rule reduce the burden on POTW's, and EPA has not revised the treatment provisions for today's final rule.

One commenter cited the results of a study conducted by the Pharmaceutical Research and Manufacturers of America (PhRMA) (and discussed in detail in PhRMA's comments on the proposed pharmaceuticals rule) showing that streams discharged to POTW's have the potential for significant emissions only from "totally open" collection and municipal sewer systems. Therefore, if the collection and municipal sewer system is totally open, the commenter recommended adding a provision that would allow an owner or operator to use the enhanced biotreatment option only if the owner or operator demonstrates, as specified in the proposed pharmaceuticals rule, that less than 5 percent of the soluble HAP is emitted from the system.

Under the proposed rule, an off-site facility that treats wastewater would be required to comply with the same requirements as an affected source, including the emission suppression requirements from the collection system. The EPA has reexamined municipal sewer systems and determined that the primary potential for emissions from the collection system is from the headworks at the POTW. Thus, the final rule specifies that either the waste management units up to the activated sludge unit must be covered, or the owner or operator must demonstrate that less than 5 percent of the total list 1 HAP is emitted from these units.

3. Standards for New Sources

Several commenters consider the proposed wastewater standards for new sources with HAP loading greater than 2,100 Mg/yr to be too restrictive. One commenter believes only Group 1 wastewater, not all wastewater, should be subject to the standards. The commenter claims that requiring control of all wastewater will result in negligible additional environmental benefits, and would likely cause greater secondary air and resource impacts (e.g., from fuel usage and emissions of combustion products).

All of the commenters requested that additional treatment options be allowed. One commenter requested that EPA add a treatment option that allows an owner or operator to reduce the mass flow rate by the Fr values; the commenter stated that a 99 percent reduction might be achievable for an individual facility with a certain combination of HAP, but it would not be achievable by all facilities. Other commenters recommended adding at least an enhanced biotreatment option. One commenter believes all of the treatment options for existing sources should be allowed for new sources. Commenters requested the additional options because they believe that limiting treatment options significantly impacts compliance flexibility with little, or no, environmental benefit. For example, one commenter realizes that a steam stripper would not meet the standard for compounds that have Fr values less than 0.99, but believes that because the remaining HAP in the treated streams are less volatile, they would have negligible air impacts. Other commenters stated that EPA had agreed during the development of revised wastewater provisions for the HON that the various treatment options under the HON are equivalent from an air emissions standpoint (e.g., 95 percent reduction in a biological treatment unit is equivalent to 99 percent reduction in a non-biological treatment unit).

According to the CAA, the MACT floor for new sources is to be based on the emission control that is achieved by the best controlled similar source. In the PAI production industry, the best controlled source is achieving 99 percent control. This source also is treating all of its wastewater from PAI processes, the HAP load in this wastewater is 2,100 Mg/yr, and this wastewater contains a mixture of compounds with a range of Henry's law constants. Thus, the proposed MACT floor for new sources with a HAP load exceeding 2,100 Mg/yr consisted of the requirements to treat all wastewater and to achieve a 99 percent reduction in the HAP content in the wastewater; for new sources with lower HAP loadings, the MACT floor is no control, as for existing sources. The EPA continues to stress that the proposed MACT floor is consistent with the CAA, and it is retained in the final rule.

If a facility has a HAP load that exceeds the cutoff, the enhanced biotreatment option (i.e., the option that exempts an owner or operator from initial compliance demonstrations) is not allowed because EPA does not have information showing that enhanced biotreatment units achieve 99 percent removal for mixtures of compounds with low Fr values. Otherwise, the final rule allows any treatment option (including enhanced biotreatment) for such affected sources, provided the owner or operator demonstrates that it achieves 99 percent removal of all HAP in the wastewater. The EPA also points out that the requirement to achieve 99 percent removals applies only to facilities that have extremely high HAP loads and thus, high potential for emissions. Few new sources are likely to exceed the applicability cutoffs for the MACT floor because 2,100 Mg/yr was more than three times higher than the load at any other surveyed facility.

Finally, the commenter's statement about the equivalence of treatment

options needs clarification. Under the HON, the 95 percent option for biological treatment units requires that the reduction be achieved from all wastewater sent to the treatment unit, not just the Group 1 wastewater. The 95 percent reduction also applies to all Table 9 compounds in the wastewater, not just compounds with high Fr values. Thus, on average, this option is considered equivalent to other treatment options in the HON. This option is not considered equivalent to the 99 percent option for new sources described above because the 99 percent reduction is required for all wastewater and all compounds.

G. Bag Dump and Product Dryer Provisions

Numerous commenters opposed the development of standards for bag dumps, and many of these commenters also opposed the development of standards for product dryers. The commenters believe the MACT floor was not established properly per EPA protocol and that the level of the standard (0.01 gr/dscf) is not readily achievable and is not typical of fabric filter control. Pointing to the decision in *Portland Cement Association* v. *Ruckleshaus*, 486 F. 2d 375, 396 (D.C. Cir. 1973), the commenters stated that the test method used to demonstrate compliance must be closely linked to the test method used as the basis for the standard. The commenters expressed concern that the standard was based on data for only one source. Some of the commenters stated that the standard should not cover bag dumps because no data on bag dumps were used to develop the MACT floor, and bag dumps are sources of fugitive emissions that are difficult to capture and route to a control device. One commenter also stated that regulating bag dumps would not result in any meaningful emission reductions because the use of bag dumps is avoided for ergonomic and workplace exposure reasons, and any particulate matter emissions are small and already controlled to reduce workplace exposure. Some of the commenters stated that if standards are promulgated for these emission points, the standard should include an applicability cutoff as well as the concentration limit, and the terms "particulate HAP" and "bag dump" should be defined in the final rule.

Standards for product dryers and bag dumps were included in the proposed rule because these emission points can be a source of HAP emissions, specifically particulate matter HAP emissions. The MACT floor for these emission points was developed for equipment that emits particulate matter HAP; this equipment was limited to product dryers and bag dumps because these are the only known sources of particulate matter HAP emissions at PAI facilities. The MACT floor also was based on the level of control for these emission points at the MACT floor facilities (i.e., the nine facilities with the best overall control of PAI process units). One of the MACT floor facilities dried a PAI that is also a HAP. Emissions from this product dryer were controlled with a fabric filter, and emissions tests showed the outlet PM concentration was less than 0.01 gr/dscf. The floor for particulate matter HAP emission sources was based on this value because both product dryers and bag dumps are controlled with fabric filters, and 0.01 gr/dscf is a typical level for fabric filters.

The EPA is not persuaded by the commenter's argument that bag dumps should not be regulated because they are (or may be) sources of fugitive emissions and are thus not comparable to product dryers. The EPA knows of two bag dumps where a HAP raw material is added to a PAI process, and both are controlled with fabric filters. At a minimum, a hood or partial enclosure can be placed above or around a bag dump to capture the emissions and route them to the control device. Furthermore, one of the commenters stated that particulate emissions would be controlled to reduce workplace exposure. Uncontrolled emissions (i.e., the pre-control emissions) from one of the two known bag dumps exceed 1.6 Mg/yr. The EPA considers this to be a significant source, and the required emission reduction to be meaningful. The fact that some facilities may have found more desirable alternatives to the use of bag dumps does not justify exempting facilities that still use them from regulation.

No mass emission rate cutoff was established because all known bag dumps that are used to add a HAP raw material to a PAI process unit, and all product dryers that dry a product that is a HAP, are controlled with fabric filters, and EPA believes 0.01 gr/dscf is a reasonable level for all fabric filters in such applications. An emissions test for the fabric filter used to control the product dryer at the MACT floor facility provides evidence that this concentration is achievable. The outlet concentration was less than 0.01 gr/dscf for each of the 12 runs in the test. The EPA expects that the existing fabric filters were designed to meet this outlet concentration, but the standards and associated monitoring requirements are included in the rule to provide assurance that they will continue to perform at this level. As a result, EPA did not change the level of the standard, or add an applicability cutoff, for the final rule.

In summary, EPA maintains that standards are appropriate for bag dumps and product dryers that emit HAP, that the MACT floor is valid, and that the standard should be based on the MACT floor. However, EPA has decided to make one change for the final rule. At proposal, the standard was for "particulate matter HAP." For the final rule, the standard is for "particulate matter" because the material captured in the fabric filters is essentially all HAP, and test methods are for "particulate matter," not "particulate matter HAP." (The EPA assumes this is why the commenters mentioned linking the test method used as the basis of the standard with the method used to demonstrate compliance.) The final rule also specifies that the particulate matter standards are for product dryers that dry a PAI or integral intermediate that is a HAP, and for bag dumps that introduce a HAP to a PAI process unit. The final rule also defines "bag dump" as equipment into which bags or other containers containing a powdered, granular, or other solid feedstock material are emptied.

H. Heat Exchanger Provisions

One commenter stated that the requirements for heat exchange systems should be deleted because EPA has not justified the high costs of sampling that would be required by the proposed rule.

The EPA disagrees with the commenter's assertion that the heat exchanger provisions impose a high cost for sampling. The rule allows considerable flexibility in the type of sampling or other monitoring that an owner or operator may perform, and the amount of required sampling or monitoring is minimal. The owner or operator may elect to sample for one or more HAP or other substances whose presence in the cooling water indicates a leak. Alternatively, the owner or operator may elect to monitor for any surrogate indicator that reliably identifies the presence of a leak. If the owner or operator elects to comply by monitoring for a surrogate indicator, the owner or operator must develop a plan that specifies what parameter or condition will be monitored, the level that constitutes a leak, and an explanation of how the selected parameter or condition will reliably identify a leak. In the first year, sampling or monitoring is required eight times; in subsequent years, sampling or monitoring is required only four times

per year. If the heat exchangers are all part of a single system, only one set of inlet and outlet samples is required. These requirements also are not considered burdensome because many facilities in the chemical processing industry, and presumably the PAI production industry as well, conduct such sampling or monitoring as a common maintenance practice. Furthermore, sampling for the detection of heat exchanger system leaks is a general requirement of some State permits (e.g., Texas Natural Resources Conservation Commission).

One commenter supports the decision to use the HON requirements for heat exchangers, but believes the rule should simply cross-reference the HON, not modify and spread out the requirements among the standards, compliance, monitoring, recordkeeping, and reporting sections of this rule.

The EPA agrees with the comment that cross-referencing the heat exchanger provisions in subpart F of the HON would simplify the rule. Therefore, the final rule cross-references all of the provisions in subpart F rather than incorporating some of the provisions in the rule and cross-referencing others. However, the heat exchanger system provisions are contained in more than one section in the PAI rule because the two rules have different structures. In the HON, all of the requirements for a specific type of emission point were presented in a single section or in consecutive sections. In the PAI rule, the standards for all types of emission points are presented in one section, the initial compliance provisions for all types of emission points are presented in the next section, and so on. Therefore, each section in today's final rule cross-references the appropriate heat exchanger system provisions from subpart F.

I. Alternative Standard

Since proposal, EPA has received comments on another proposed regulation requesting the inclusion of an alternative standard for facilities that treat HAP emissions, especially from aggregated streams, with add-on control devices. The commenters contended that the use of such control devices should be encouraged because (1) greater emission reduction would occur by controlling processes that are not subject to a rule as well as those that are, (2) it may facilitate the streamlining of compliance requirements and thus reduce the resource burdens on both industry and the enforcement agencies, (3) it may be easier to assure and assess compliance, and (4) it may be more energy efficient and result in lower secondary emissions if fewer control devices are used.

The EPA agrees with the commenters and therefore decided to include an alternative in today's final rule. The alternative standard can be applied to individual process vents and storage vessels or to process vents and/or storage vessels that are manifolded together (with or without emissions from other sources) for control in an end-of-line control device (or series of control devices). The control device (or last control device in a series) must achieve an outlet, undiluted TOC concentration of 20 ppmv or less, as calibrated on methane or the predominant HAP. The control device must also achieve an outlet concentration of 20 ppmv or less as HCl and chlorine. Any other process vents within a process are regulated under the rule as otherwise specified without taking credit for the vents that are controlled under the alternative standard.

To simplify applicability of the alternative, all process vent and storage vessel emissions that are manifolded to a control device are considered as one regulated entity. As a result, an exceedance under the alternative standard results in only a single violation for a given control device, whereas an exceedance under the regular standard results in separate violations for each process using the control device.

J. Pollution Prevention Alternative

Comments relating to the proposed pollution prevention alternative included objections to the high numerical reduc tion target of 85 percent, and to the lack of specific recordkeeping and reporting requirements for demonstrating compliance. Commenters also objected to the proposed restriction on the use of the alternative for processes that generate HAP, and to the requirement that most of the reductions be achieved through pollution prevention techniques and not add-on controls. The following sections summarize major comments on the proposed pollution prevention alternative, EPA's response to these concerns, and subsequent changes made in today's final rule.

1. Objection to the High Removal Target for the Pollution Prevention Alternative

Two commenters asserted that the 85 percent reduction in HAP consumption factor should be changed to 75 percent for both pollution prevention options to be consistent with the Pharmaceutical MACT proposal.

The 85 percent reduction was not changed in the final rule to be consistent with the value specified in the Pharmaceutical MACT standard because both values were developed using industry-specific data. The basis for the 85 percent reduction is the overall nationwide reduction from uncontrolled emissions that is estimated as a result of the implementation of the standards in this industry. Although the required reduction "target" was calculated using the same methodology as that in the Pharmaceuticals MACT standard, the difference in numerical value is simply due to differences in the impact of the two rules on each respective industry. For the PAI production industry, the standards achieve slightly greater reductions relative to the uncontrolled baseline, which is carried forward to the reduction target for the pollution prevention alternative. See the pollution prevention memorandum in the Supplementary Information Document for details of this analysis.

2. Data Management for Compliance Demonstrations

One commenter stated that the mechanism to realize pollution prevention reductions must be maintained in a system that can be managed and provide data that regulated entities and EPA can use. The commenter asserted that States may not be prepared to support this regulation with the training requirements of their already overworked staffs.

The Agency agrees with the commenter that the information necessary to demonstrate compliance with the pollution prevention alternative should be identified, collected, and managed in a way that minimizes burdens on both the industry and the regulatory agencies charged with enforcement. Therefore, the final rule requires sources seeking to comply with the pollution prevention alternative to submit, as part of the Precompliance plan, a pollution prevention demonstration summary that describes how the pollution prevention alternative will be applied at the facilities, and what tracking mechanisms will be used to demonstrate compliance with the alternatives. This summary should include descriptions of how the facility will measure and record HAP consumption and production on a daily, monthly, and annual basis. The summary should also include appropriate documentation of how consumption will be tracked such as, but not limited to, operator log sheets, daily, monthly, and annual inventories

of materials and products, and shipment and purchasing records. The pollution prevention demonstration summary report allows the owner or operator some flexibility in deciding the most reasonable and efficient way to demonstrate compliance, while incorporating the regulatory agency's review and approval prerogative. Regarding the agency burden, EPA believes that compliance with the pollution prevention alternative may actually reduce much of the burden on the enforcement agency, in that the monitoring, reporting and recordkeeping burden will be reduced to a material tracking effort, potentially minimizing the amount of data needed to demonstrate continuous compliance (e.g., monitoring data) for an entire process.

3. Pollution Prevention for Reactant and Generated HAP

The EPA received several comments on the proposed rule's restriction against using the pollution prevention option in situations where HAP are generated in the process. One commenter specifically stated that pollution prevention should be allowed for HAP generated in a process. Another commenter indicated that the rule was not clear on how to comply when the HAP generated in the process is the same as that introduced. A third commenter noted that these exclusions would prevent them from using pollution prevention and suggested that the rule include calculations based on total resource effectiveness (TRE) equations like in the HON as a way to provide more cost-effective alternatives for processes that are prohibitively expensive to control (i.e., that would exclude such processes from the requirements of the conventional standards).

The Agency reviewed the language contained in the proposed standard and has revised it to capture the Agency's intent in restricting the use of the alternative in situations where HAP are generated, without prohibiting its use altogether. The Agency's concern, in adding the restriction to the proposed standard, was that HAP generated in a process would not be addressed through the pollution prevention alternative because it requires only a reduction in the consumption of HAP that are actually brought into the process. Therefore, a situation could exist in which a process could be exempted from control because the production-indexed consumption factors were reduced by adequate amounts (85 percent), while a potentially significant amount of HAP, which happened to be generated in the process, could still be emitted. The EPA agrees with the commenter that sources that generate HAP should be eligible for the pollution prevention standard, provided the HAP generated by the sources are included in the analysis. Therefore, the final rule allows owners and operators to use the pollution prevention alternative for processes that generate HAP that are not part of the production-indexed consumption factor (e.g., the HAP generated are different from the HAP brought into the process), provided the following conditions are met: (1) emissions of generated HAP are controlled to the levels required by the applicable provisions for storage vessels, process vents, wastewater, and equipment leaks; and (2) the pollution prevention requirements are applied to the HAP that are added to the process. For HAP that are generated in the process, as well as brought into the process (consumed), the definition of consumption has been revised in the final rule to consider quantities of HAP that are generated by the process.

A related issue is the tracking of the VOC consumption-indexed production factor and the proposed rule's requirement that this factor should not be increased as a result of pollution prevention. Although this issue was not specifically commented on, EPA also revised the language of the final rule regarding the production-indexed VOC consumption factor. In developing the pollution prevention alternative, EPA's intention was to recognize those processes that have reduced or will reduce the amount of HAP solvents used in the manufacture of PAI's as viable alternatives to add-on controls. By preventing affected sources from increasing the production-indexed VOC consumption factor, EPA intended to prevent solvent substitutions that merely replaced HAP with VOC. After reviewing the proposed pollution prevention standard, EPA realized that the proposed standard gave an unfair advantage to affected sources that use VOC-HAP solvents as opposed to non-VOC HAP solvents. As proposed, the rule did not allow affected sources using non-VOC HAP solvents to switch to low-VOC solvents and still qualify under the pollution prevention alternative because such a switch would increase the production-indexed VOC consumption factor. However, affected sources that use VOC-HAP solvents could switch to low-VOC solvents as long as the production-indexed VOC consumption factor did not increase. The EPA's intention in the final rule is that pollution prevention be accomplished through reductions in solvent usage as opposed to solvent substitution. After consideration, EPA changed the final rule to require an equivalent reduction in the production-indexed VOC consumption factor, if the reduction in the production-indexed HAP consumption factor is achieved by reducing a HAP that is also a VOC. If the reduction in the production-indexed HAP consumption factor is achieved by reducing HAP that is not a VOC, the consumption-indexed VOC factor may not be increased. In making these changes to the final rule, EPA essentially eliminated the possibility of receiving credit, through the pollution prevention alternative, for substituting VOC for HAP.

4. Restrictions on Reductions Achieved Through End of Pipe Controls (Option 2 of the Pollution Prevention Alternative Standard)

As proposed, option 2 limited reductions in the HAP factor to exactly 50 percent of the baseline factor, even if actual reductions exceeded this level. Several commenters recommended revising option 2 to allow any combination of pollution prevention and end-of-pipe controls to meet the 85 percent reduction requirement. Some of the commenters explained that not allowing credit for higher reductions makes the option unworkable under certain conditions, and it provides incentives for destruction of recovered material instead of reuse. Some commenters also stated that allowing credit for reductions less than 50 percent would be beneficial, in that such combinations of pollution prevention and emission control would bring overall removals to levels equal to or greater than those required by the standards. As an alternative to option 2, one commenter suggested allowing sources to comply with 90 percent of any applicable standard if at least 50 percent of the reductions are the result of pollution prevention. Finally, the commenters believe option 2 places "unnecessary" constraints on the type of control devices that can be used to obtain the required reductions.

In response to the comments, EPA stresses that the pollution prevention alternative is an alternative to the standards in the rule. As such, the Agency has flexibility in developing requirements that may provide alternative approaches for compliance, but is charged with preserving the reductions that would have been achieved through compliance with the standards themselves. Under option 2, EPA required that a significant portion (50 percent) of the reductions be

achieved using pollution prevention techniques, not add-on controls. Without such a restriction, owners and operators could attempt to use add-on controls entirely in meeting the pollution prevention target reductions, which might result in reductions that are less than those required by the standards. For example, the process vent standard requires a 90 percent reduction in the HAP emissions from affected processes, not an 85 percent reduction.

In an effort to ensure the emission reductions from the pollution prevention alternative are at least equivalent to the emission reductions achieved by the standards, the reduction target for the pollution prevention consumption factor was linked to the predicted reductions from the nationwide uncontrolled emissions through implementation of the standards. It was always the Agency's intent that these reductions would be achieved primarily through pollution prevention techniques. In recognition of the difficulties associated with achieving such high consumption reduction targets (85 percent), however, the Agency developed option 2 to allow some of the reductions to be achieved using add-on controls. For these reasons, the Agency disagrees, in general, with the comments suggesting lesser reductions in both the overall target of 85 percent and the requirement that at least 50 percent of the reductions be attributed to the pollution prevention alternative. However, the Agency agrees with the comments that option 2 as proposed is unworkable if the reduction achieved by pollution prevention exceeds 50 percent of the required amount. For the final rule, option 2 was revised to require that at least 50 percent of the reductions be achieved using pollution prevention and that the remainder of the 85 percent, however much is needed, be achieved using conventional controls.

The Agency stresses that the restrictions on the types of add-on controls allowed to be considered in addition to the pollution prevention reductions in meeting the overall target, are in place to guard against double-counting of emission reductions; for example, control via a technique that recycles HAP material back to the process is an environmentally beneficial technique and is encouraged. However, the recycling effect will also reduce the consumption of HAP; therefore, the recycling is inherently considered. To further reduce the consumption factor by the control achieved by the condenser would result in double counting of emissions reductions.

K. Emissions Averaging

1. Complexity of the Methodology

One commenter supported the concept of emissions averaging, but noted that the provisions are so complex and burdensome that many owners and operators may be deterred from using this option.

The emissions averaging provisions provided in the proposed rule are identical to those included in the HON. Further, the requirements are necessarily complex because of the increased flexibility of the compliance approach provided by the provisions. As stated in the HON promulgation preamble discussion, the EPA's goal in crafting the emissions averaging provisions was to make emissions averaging available to sources faced with controlling emission points that are particularly difficult or costly to control, while maintaining the ability to demonstrate compliance with the standard.

2. Nominal Efficiencies for Control Devices

Two commenters suggested that EPA set a nominal control efficiency for combustion devices used for air emission control for storage tanks and/or wastewater at 98 percent. One of the commenters asserted that EPA's wording in § 63.1362(k)(2) of the proposed rule inappropriately restricts sources equipped with controls listed in that section from generating emissions averaging credits.

The EPA believes that the commenters would like to equate 98 percent control to the performance specifications provided in the proposed rule for combustion devices used for air emission control for storage tanks and/or wastewater sources. The EPA does not agree that a nominal 98 percent should be assigned to these devices. Although EPA did establish these performance specifications, EPA maintains that testing is important to ensure that a control device can achieve the reported efficiency. For these reasons, EPA has required performance testing on combustion devices that control greater than 10 tons/yr of HAP. Therefore, EPA will not allow credits based on a control efficiency that has not been demonstrated. Secondly, the provisions of § 63.1362(k)(2) incorrectly referred to the 98 percent and 95 percent control levels as "nominal" control efficiencies. These efficiencies must be demonstrated via performance testing and therefore should not be restricted from obtaining credits in emissions averaging. The final rule has been changed to reflect this correction.

3. Restrictions on Calculation of Credits

Commenters believe EPA should delete the restrictions that prohibit a source from calculating emission averaging credits for emission reductions achieved prior to November 15, 1990 or with equipment installed to comply with other State/Federal rules. The commenters believe these restrictions (1) are arbitrary, (2) are not dictated by the CAA, (3) unfairly limit economic incentives and thus impose unreasonable costs, (4) penalize progressive companies, and (5) are inconsistent with procedures to develop the floor (i.e., emission points that would be excluded from emissions averaging are used in setting the standard). In addition, one commenter believes EPA's response to comments in the April 22, 1994 **Federal Register** notice on the HON are inadequate to justify the restriction.

The EPA's policy on not allowing averaging of emission reductions for controls in place prior to the passage of the 1990 CAA Amendments was explained in the April 22, 1994 **Federal Register** notice for the promulgated HON (59 FR 19426), and this rationale is still applicable. In general, the emissions averaging provisions are designed to provide an owner or operator with flexibility in designing a compliance strategy that optimizes the use of existing controls, rather than replacing them. However, the final rule does not allow credit for emissions reductions achieved by control devices installed before November 15, 1990 because EPA policy is that regulations must achieve additional reductions beyond what would have occurred in the absence of the amended CAA. Emission reductions achieved by controls that were in place prior to November 15, 1990 would have occurred regardless of whether or not the CAA was amended. If the rule allowed a source to take credit for these preexisting emission reductions, the source could increase its emissions above the 1990 baseline levels. Regarding the commenter's view that the restrictions penalize progressive companies, EPA notes that, at least for process vents that meet the applicability criteria for 98 percent control, owners and operators who can demonstrate that controls achieving the MACT floor level of control (90 percent) were in place prior to the proposal date of these standards are not required to achieve the higher efficiency requirement of 98 percent. In this manner, companies who have taken proactive measures to control emissions are actually rewarded. Additionally, the pollution prevention

alternative standard also rewards facilities which have demonstrated significant reductions in their production-indexed consumption factors. Finally, these provisions have been included in numerous regulations beginning with the HON, and they have been reviewed and approved by Office of Management and Budget (OMB).

4. Emissions Averaging for New Sources

Commenters objected to restrictions on emissions averaging for "new sources." The commenters disagreed with EPA's rationale in the preamble that this approach holds new sources to a stricter standard and that flexibility is unnecessary for new sources. The commenters argued that using emissions averaging is the more stringent approach because of the 10 percent discount factor that is applied to credits. Furthermore, the commenters stated that new sources also need flexibility to comply with the standard in the most economical and efficient manner: for example, if a new source is added to an existing facility there may be opportunities to route emissions from the new source to existing controls, or to over control certain existing or new emission points to provide equal or greater environmental benefit at lower cost. Also, commenters believe this restriction unfairly limits economic incentives and imposes unreasonable costs.

The EPA's policy on not allowing averaging of emission reductions for new sources was explained in the April 22, 1994 **Federal Register** notice for the promulgated HON (59 FR 19427), and this rationale is still applicable. As noted above, EPA designed emissions averaging provisions to provide existing sources with flexibility in achieving compliance. Instead of requiring the replacement of all existing controls that do not meet the level of the standard, the emissions averaging provisions allow an existing source to optimize the use of existing controls in the most economical and technically feasible fashion. The EPA maintains that this concern does not apply to new sources because the owner or operator of a new source would be able to integrate state-of-the-art controls into the design of the new source. However, nothing in the rule prevents an owner or operator from routing emissions from a new PAI process unit to an existing control that meets the required control levels. Finally, these provisions have been included in numerous regulations, beginning with the HON, and they have been reviewed and approved by OMB.

Even if emissions averaging were allowed for new sources, certain other factors may limit its feasibility. For example, new sources are subject to the requirements of the new source review (NSR) program that may require levels of control similar to those in the rule for new sources. In addition, because the level of stringency in the new source standards is high (98 percent), achieving credit above and beyond the 98 percent levels is probably unrealistic in most situations.

L. Testing Provisions and Initial Compliance Demonstration

1. Testing Conditions

Several comments were received regarding the proposed rule's language on testing. Specifically, commenters identified the requirements for testing under "absolute," "representative," and "hypothetical" conditions to be confusing and suggested simpler language that specifies, under actual or simulated conditions, the highest 1-hour period of HAP loading. Another commenter objected to the requirement of testing under the worst-case loading conditions, and suggested that testing be required to be conducted under "representative" conditions, citing several reasons for the comment, including safety (operating the device at higher than design loads could create safety issues), precedent from other regulations, and difficulty with production scheduling and the resulting production of unmarketable products if the process was operated in an abnormal fashion. The commenter also questioned the benefits of such testing, stating that organic HAP removal efficiency should be fairly stable across a device.

In response to these comments, EPA has made several changes to the testing language in the final rule that generally cover the commenters' suggested revisions, but also allow more flexibility in defining the required peak-case testing conditions. These changes include the elimination of the option to test under "representative" peak-case testing conditions, and the elimination of testing requirements for condensers. Additionally, EPA has expanded the testing language to cover factors other than the highest HAP load that also impair control efficiencies (i.e., the most challenging conditions for the control device). These other factors that limit control efficiencies relate to characteristics of components and the operating principles of the control devices. For example, the solubility of an emission stream component in scrubbing media, or the affinity of an emission stream component for carbon can also define the most challenging conditions for a particular control device.

The intent of compliance testing under peak-case conditions is to document the reduction efficiency of the control device under the most challenging conditions. This documentation is necessary to assure compliance in cases where the process operations yield emission stream characteristics that may vary significantly over time, and where conditions approaching absolute peak-case may occur. Subsequent to the initial compliance test, continuous monitoring of operating parameters established during the test is a reasonable measure of continuous compliance. Presumably, the control device should function as well or better under conditions that are not as challenging.

Although EPA is sensitive to unnecessarily increasing the burden associated with testing of control devices for little benefit, the Agency still has concern that testing under "representative" conditions (where "representative" is defined either as in the proposed rule for representative peak-case or as a more general concept as suggested by the commenter) may not be sufficient to demonstrate that the control device will achieve required efficiencies under all conditions. This is especially important as it relates to the continuous compliance demonstration provision. Therefore, the option to test under representative peak-case conditions has been eliminated for the final rule, and testing under representative conditions has not been added.

The final rule, however, does allow more flexibility in defining absolute and hypothetical peak-case conditions. The definition of "absolute peak-case" in the final rule incorporates the possibility that conditions other than the highest HAP loading constitute the most challenging conditions for the device. These conditions include, but are not limited to, periods when the emissions to the device may contain the highest combined VOC and HAP load, periods when the streams contain HAP constituents that approach limits of solubility for scrubbers, or periods when the streams contain HAP that approach limits of adsorptivity for carbon systems.

The hypothetical peak-case conditions also have been expanded. In addition to establishing hypothetical peak-case testing conditions based on a calculation of maximum actual emissions, the final rule allows hypothetical peak-case conditions to be defined based on equipment design

features that limit the maximum hourly emissions that can be routed to the control device. For example, a fan may limit the flowrate, and the concentration may be limited to a certain percentage of the lower explosive limit before a bypass valve opens.

The Agency does not believe that the testing provisions in the final rule require operation in a manner that could damage equipment, because the testing is only required for conditions that have some reasonable likelihood of occurring. Thus, the design of the system should have considered the possibility of operating under these conditions.

Regarding the comment that the testing provisions should not require operation in a manner that produces excess or unmarketable products, or in a manner that will not occur within the time frame allotted prior to the compliance date, the Agency concedes that some inconvenience to the source may occur, but believes that in most situations, facilities will be able to work within the confines of the definitions to arrive at a set of testing conditions that minimize production disruptions. The Agency also notes that the requirement for submittal of the site-specific test plan is also an opportunity for the facility to present site-specific information that may influence the selection of testing conditions. The EPA encourages owners and operators to work with the permitting agencies to arrive at solutions that meet the intent of this regulation.

2. Emission Estimation Procedures

One commenter stated that facilities should be allowed to calculate emissions based on all available information, including, but not limited to, the equations in the proposed rule, and that they should not have to demonstrate that the equations in the rule are inappropriate. According to the commenter, it is not logical to require facilities that produce a variety of products, only a small portion of which are PAI's, to modify their calculation methodology; nor is it logical to require recalculation on a large scale when the existing emissions estimates are based on fundamentally sound principles. The commenter also noted that facilities already may have invested significant resources to develop methodologies for calculating emissions. Another commenter requested that the rule specify when the emission estimation procedures are not considered appropriate.

For the final rule, EPA did not change the requirement to use equations to estimate emissions when the emission episodes fit the descriptions provided in the rule. The EPA believes that the equations in the rule are the most appropriate methods to estimate emissions from seven specific types of emission episodes. The requirement to use the equations, when appropriate, also is important in standardizing compliance procedures for the industry and in providing replicable procedures which the regulated community and the Administrator can follow to assure compliance. However, the rule also allows owners or operators to request approval to use alternatives for estimating emissions. The EPA believes it is important that the owner or operator be able to make a case for any alternative approach. The final rule clarifies the language describing when an engineering assessment must be conducted and when it may be conducted.

3. Compliance with the Outlet TOC Limit

Several commenters believe EPA should justify why a performance test to demonstrate compliance with the outlet TOC concentration under § 63.1364(c)(1)(viii) of the proposed rule must be conducted only under absolute peak-case conditions. Other commenters also stated that this section of the proposed regulation unnecessarily restricts the choice of test methods to demonstrate compliance with the outlet TOC concentration. Commenters requested that this section be modified to allow combinations of test methods to measure TOC, and to allow measurement of total organic HAP using Method 18.

The EPA reviewed the language in the proposed rule and decided to include two options for demonstrating compliance with the outlet TOC concentration. The source must choose one of the following compliance methods: (1) continuously monitor outlet concentration using a flame ionization detector (FID) or other devices, or (2) perform an initial performance test at absolute or hypothetical peak-case conditions and continuously monitor operating parameter levels. Initial testing at absolute or hypothetical peak-case conditions is not necessary for option 1 because continuous compliance is determined through the use of an FID or other device that continuously monitors outlet concentration (however, if the monitor is to be calibrated on the predominant HAP, it may be necessary to perform an initial test to identify the HAP). Conversely, EPA believes testing under absolute or hypothetical peak-case conditions is necessary for the second option to ensure that operating parameter levels are established that will ensure compliance under all operating conditions. The monitoring requirements for option 2 are the same as the monitoring requirements for complying with the percentage reduction format of the standard. Therefore, EPA believes the initial testing that is used to establish the monitoring parameters should also be the same in both cases.

Finally, EPA has modified the final rule so as not to restrict the choice of methods that the owner or operator may use to determine TOC (i.e., Method 18 is allowed for speciation). However, EPA emphasizes that the concentration limit is based only on TOC, not total organic HAP.

Commenters also objected to the requirement to correct outlet TOC emissions to 3 percent oxygen for the 20 ppmv outlet standard. Commenters oppose this provision because many thermal and catalytic incinerators normally operate with higher oxygen levels in the exhaust stream. Commenters suggested that a more reasonable requirement would be to correct the outlet TOC concentration to the design outlet oxygen concentration for each particular device. One commenter noted that the requirement should only apply when the control device is an incinerator.

The General Provisions prohibit the use of dilution as a means of achieving compliance with a standard (see 40 CFR 63.4(b), Circumvention). However, EPA also recognizes that there are valid reasons for introducing air or inert gases into manifolds for safety or design considerations. For example, supplemental combustion air may be required for proper operation of an incinerator. The intent of the proposed requirement for correction to 3 percent oxygen was to allow an owner or operator to add supplemental combustion air, but only take credit for the amount that is needed for proper operation. As one commenter noted, this correction was not intended to apply to other types of control devices.

The correction to 3 percent oxygen concentrations was drawn from the HON and the earlier SOCMI NSPS. Under these rules, this correction is required for purposes of demonstrating compliance with a 20 ppmv outlet concentration standard. The value of 3 percent originates from good engineering practices. For oxygen deficient streams, if the proper amount of supplemental combustion air is added, the outlet stream would contain approximately 3 percent oxygen. Typically, SOCMI facilities have low oxygen, high VOC/HAP concentration

streams that generally require supplemental combustion air when they are combusted. Therefore, a correction to prevent dilution was needed in rules for the SOCMI industry.

A similar requirement to correct the outlet concentration was included in the Polymer Manufacturing NSPS. Commenters on the proposed NSPS asserted that an oxygen correction may be appropriate for oxygen deficient streams to which supplemental combustion air is added to ensure combustion of the emissions, but it is not appropriate for high oxygen, low VOC concentration streams. The commenters on the proposed NSPS further stated that requiring an oxygen correction for processes with inherently high oxygen concentrations would prevent facilities from being able to use the 20 ppmv outlet concentration compliance option. Because at some point the combination of low VOC/HAP concentration and technology limitations of control devices makes it impossible to achieve a high percentage reduction (98 percent in the case of the Polymers NSPS), the 20 ppmv outlet concentration may be the only compliance option for some streams. As a result of considering these comments, the final rule for the Polymer NSPS was changed to require a correction to 3 percent oxygen only if supplemental air was used to combust emissions.

Other available information indicates that for some pharmaceuticals processes, dilution is needed for safety or design considerations other than for use as supplemental combustion air. Typically, this dilution occurs in manifolds conveying emission streams from unit operations that already have high oxygen concentrations, and it occurs for control devices other than incinerators. Although EPA does not have similar information for the PAI production industry, the information from the surveyed plants supports the commenters contention that there are process vent streams with high oxygen concentrations. It is also possible that some of these streams are diluted for reasons other than to supply supplemental combustion air.

It is not EPA's intent to prohibit the introduction of dilution air or other gases, only to ensure that outlet concentrations are corrected for such dilution. As a result, EPA made a number of changes in the requirement to correct outlet concentrations to prevent dilution. First, a definition of "supplemental gases" has been added to the final rule; this term includes supplemental combustion air as well as any other nonaffected streams with TOC and total HCl/Cl_2 concentrations less than 20 ppmv that are combined with affected streams. Second, the final rule clarifies that the correction to 3 percent oxygen applies only for incinerators, and only if supplemental gases are added. Third, the final rule explicitly describes procedures to correct for dilution in noncombustion devices.

4. Exemptions From Performance Testing

Several commenters requested that EPA change the cutoff that defines the minimum size of a control device for which a performance test must be conducted to demonstrate compliance. The proposed rule required performance testing of devices receiving at least 10 tons/yr of HAP emissions. Additionally, other commenters stated that the exemption to the performance test requirement for sources that have conducted a previous test using the same procedures as those required by the rule is basically useless because it is unlikely that a previous performance test would have been conducted using the same procedures and under the same peak-case conditions as those required by the rule. The commenters added that any test on the control device to demonstrate compliance under any EPA-supervised program (e.g., NSPS, NESHAP, RCRA, NSR) should be sufficient to demonstrate compliance with this regulation.

The EPA continues to believe that the testing cutoff for control devices is proper. In developing the regulation, EPA could have required testing of all devices. The EPA proposed the testing cutoff to decrease the burden of testing on the industry. For devices handling lesser loads, EPA believes that the design evaluation will be adequate to demonstrate compliance.

The EPA also continues to believe that the conditions for exempting certain sources from performance testing are proper. As described previously, EPA believes compliance must be demonstrated under the most challenging conditions for the control device to ensure compliance over a range of conditions, especially when variability in emission stream characteristics cannot be predetermined. Therefore, only performance tests that have been conducted at conditions that represent the absolute or hypothetical peak-case conditions are considered valid for demonstrating compliance with this rule.

5. Initial Compliance for Condensers

Under the proposed rule, EPA included three options for sources to determine emissions and control efficiencies for condensers: (1) Performance testing including measurement of HAP concentration and flowrate under peak-case conditions, (2) direct measurement of temperature of the outlet gas under peak-case conditions, or (3) emission estimation. Since proposal, EPA identified the following problems with the proposed options: (1) Direct measurement of temperature is a procedure to demonstrate ongoing compliance, not initial compliance; (2) for condensers, determining the control efficiency during the peak-case conditions does not ensure that the same or higher control efficiencies will be achieved under other conditions, (3) options 2 and 3 are not independent because the outlet temperature is needed to estimate emissions from a condenser, and (4) performance testing is not a replicable procedure for batch processing operations and is unnecessary for establishing the control efficiency. To address these concerns, the final rule was revised to include only one procedure for demonstrating initial compliance when using a condenser. This procedure requires calculation of the outlet temperature that is needed to achieve the required control efficiency for an emission episode (or group of episodes).

Determining the control efficiency for condensers under the peak-case conditions does not ensure that the control efficiency under other conditions will be the same or higher. Under the proposed rule, the peak-case conditions were defined based on the stream from which the maximum amount of heat must be removed over a specified time period to achieve the required emissions reduction. However, to achieve the required control efficiency for another emission stream with a different pollutant and/or temperature may require a significantly lower outlet temperature, even though less heat is removed. Basing the monitoring on the temperature for the stream with the maximum heat removal requirement would not ensure that the lower outlet temperature could be achieved for the other stream.

The revised procedure for the final rule is a replicable protocol in that for identical inlet conditions, every source will estimate the same controlled emissions and control efficiency when using the same outlet temperature. Performance testing for batch processing operations, on the other hand, can be difficult and can lead to considerable variability in results. In addition to concerns about replicable results, the performance testing provisions in the proposed rule were not structured to properly account for control efficiency

of condensers under all conditions. Under the performance testing option in the proposed rule, the control efficiency would be determined for the peak-case conditions. Then, using the heat removal rate that occurred during the test, the outlet temperatures, and thus control efficiencies, could be calculated for other inlet conditions. However, a performance test is not needed because these temperatures can be calculated based on the properties of the emission streams. For these reasons, the final rule does not specifically require testing of condensers (e.g., measurement of flowrate and concentration to generate a mass rate) as a means of compliance with the standards. However, as with other practices, owners and operators can propose alternative means of demonstrating compliance with the standards for approval on a case-by-case basis.

M. Monitoring

1. Establishing Parameter Levels

Several commenters suggested that testing under peak-case conditions and establishing parameter levels for the continuous compliance demonstration results in overcontrol during most of the operations and therefore increases the stringency of the standards. The commenters also believe the requirements to use the average of the three test runs to set the parameter level and to determine compliance on a daily basis, as opposed to a yearly basis, increase the stringency of the standards. One commenter believes that a source should be able to establish parameter ranges other than those measured during a performance test.

In the final rule, EPA requires that testing be conducted under absolute or hypothetical peak-case conditions if all control device inlet stream conditions cannot be predetermined. If inlet stream conditions can be predetermined, the owner or operator has the option of setting different monitoring levels for different operating conditions. This option was provided in the proposed rule and has been retained in the final rule. Therefore, EPA does not believe the requirement results in over control.

Regarding averaging periods, EPA has modified the compliance period of the standard to allow averaging on either a 24-hour basis or a "block" basis, where the block may be any length of time less than the time from the beginning to the end of a batch process. For batch operations, an annual compliance period was determined by EPA to be too difficult to implement and therefore not practical. The annual compliance period implies that owners and operators could control a process to varying degrees during the course of a year, as long as the yearly percent reduction target would be met. Although this format would offer flexibility to owners and operators who want to change control strategies to accommodate production scheduling and operational changes, EPA believes that the demonstration of compliance over such an extended time period would result in delayed determination of exceedances and the possibility for extended periods of violations. The EPA notes that the final rule offers numerous compliance options to provide flexibility for owners and operators to address variability within their processes.

Regarding the setting of parameter levels, the purpose of monitoring operating parameters is to provide evidence of continued compliance with the rule. Monitoring parameters are set based on test data, calculations, or information from the evaluation of the control device design. The final rule requires sources to establish maximum or minimum operating parameter levels based on the average of the average parameter values for each of the three test runs (i.e., average values are to be determined for each of the three test runs, and the monitoring parameter level is to be based on the average of these three values). The Agency believes that setting monitoring levels based on the average of three test runs is necessary because the control efficiency is also based on the average from the three test runs. Basing the monitoring parameter on the results of only one of the test runs would be inconsistent with the average control level.

2. Monitoring With Bag Leak Detectors

Two commenters believe the requirement to initiate corrective action within 1 hour of a bag dump alarm is unnecessarily rigid or unnecessary because other situations may require priority attention, replacement parts may not be readily obtainable after normal business hours, or it could trip accidentally. One commenter suggested changing the 1 hour time period to 3 hours. Commenters also believe it is both unnecessary and inconsistent with other aspects of the rule to require written approval before adjusting the range, averaging period, alarm setpoints or alarm delay time contained in the Notification of Compliance Status report. The commenter suggested requiring changes to be reported in the next periodic report, and, if prior approval is needed, it could be handled under the Operating Permit program.

The intent of the requirement to initiate corrective action procedures within 1 hour is to ensure the prompt investigation of the cause of an alarm and resolution of the underlying problem. The corrective action does not necessarily have to be completed within the hour, but the owner or operator should follow predetermined procedures that are to be described in a written corrective action plan. These procedures may vary depending on the time of day, what was determined to cause the alarm, other priorities in an emergency, and other factors. Timing is one aspect of the procedures that the owner or operator should address in the corrective action plan. For the final rule, these provisions have been edited to clarify intent. One substantive change since proposal is that the corrective action plan is to be submitted with the Precompliance plan rather than the Notification of Compliance Status report. This change will allow the implementing agency to review and approve the procedures.

The intended use of the bag leak detector is to identify upset conditions in the baghouse operation. The EPA is concerned that unrestricted adjustment of the bag leak detector could result in improper use, possibly resulting in the alarm and sensitivity settings being set such that leaks or malfunctions could occur undetected. Based on further review, EPA has determined that periodic adjustment may be necessary. Therefore, EPA has revised the bag leak system adjustment requirements to: (1) Allow for routine minor adjustments to the detector system, (2) require owners and operators to identify all routine adjustments in an operating and maintenance plan that is to be submitted with the Precompliance plan, and (3) require that owners and operators perform complete baghouse inspection to ensure proper operation of the baghouse prior to any significant adjustments to the sensitivity or range.

3. Monitoring Frequency

One commenter believes two aspects of the proposed monitoring frequency are excessive: (1) The requirement in § 63.1365(b)(3) of the proposed rule to monitor batch episodes less than 15 minutes in duration, and (2) the requirement to monitor control devices controlling less than 10 ton/yr of an individual HAP or 25 ton/yr of aggregate HAP. For the control devices, the commenter believes "periodic" monitoring would be sufficient because many parameters do not vary frequently, and it would allow for the use of simpler monitoring systems that are less prone to design and maintenance problems.

When only one monitoring level is established for a parameter, the EPA agrees with the commenter that monitoring of batch episodes less than 15 minutes in duration should not be required because the practical limit of monitoring frequency is one reading per 15 minutes. Instead of requiring that each batch episode be monitored at least once, the final rule requires an owner or operator to measure and record the parameter level at least once every 15 minutes during the period in which the control device "is functioning in achieving the HAP removal required" by the rule. This means that one reading must be taken for every 15-minute period of continuous venting from any combination of emission episodes manifolded to the control device. Thus, even when individual emission episodes are shorter than 15 minutes, one reading is required if venting occurs for at least 15 minutes due to overlapping or "contiguous" episodes. On the other hand, if short emission episodes are separated by periods of no flow or venting from vents that are not subject to control, the owner or operator does not need to monitor during each episode. In this case, monitoring every 15 minutes will result in some readings that correspond with an emission episode of an affected stream. Only these readings must be included in the daily (or batch) average. For storage vessels, a control device is considered to be functioning in achieving the HAP removal required at all times material is stored in the vessel. Although working losses occur only during relatively short periods when the tank is being filled, breathing losses may occur at any time. To identify periods of no flow, a flow indicator (not necessarily a flow monitor) would be required.

An exception to the procedures described above exists if the owner or operator establishes separate monitoring levels for different emission episodes. In this case, at least one reading must be taken each time the level changes, even if episode lasts less than 15 minutes. This exception is included to counteract the possibility of setting multiple levels in order to avoid monitoring.

As a result of the change in monitoring frequency, the definition of a valid hour of data as used in the definition of an excursion also has been modified in the final rule. At proposal, monitoring data would not constitute a valid hour of data if measured values are unavailable for any of the 15-minute periods within the hour. For the final rule, the word required has been added before the phrase "15-minute period" to address the fact that less than four data points per hour may be allowed in some situations.

The EPA believes that the requirement to take 15-minute readings for devices controlling more than 0.91 Mg/yr of HAP is reasonable. The cutoff for continuous monitoring was set because EPA wanted to reduce the compliance burden on facilities with smaller control devices. The EPA also notes that "periodic" monitoring could increase the potential for being out of compliance with the standard, because a reduction in the number of data points places a significantly higher emphasis on each reading for compliance determination. Additionally, because emission stream characteristics in this industry are variable, the use of "periodic" readings may not represent true conditions over the monitoring period.

4. Monitoring for Storage Vessel Controls

One commenter believes the proposed rule lacks appropriate monitoring provisions for control devices that are used to control emissions from storage vessels. According to the commenter, the proposed provisions address only continuous monitoring, which often will not be appropriate for storage vessels because the emissions occur primarily during filling. Furthermore, if emissions are controlled using a disposable carbon canister, the monitoring may consist only of replacing the canister before the end of its rated life, not periodically checking a parameter. Therefore, the commenter recommended that EPA include some of the concepts from the storage tank monitoring provisions in § 63.120(d) of the HON. For example, these provisions specify that the owner or operator must prepare a monitoring plan that describes how the monitoring will be done. In addition, the commenter indicated that the rule needs to define "excursion" for situations where monitoring is not continuous (e.g., the rule should specify that the monitoring plan "shall define an excursion in terms of the relevant operating parameter").

The monitoring provisions in § 63.1365(a) of the proposed rule were intended to apply to control devices used for continuous processes, and the provisions in § 63.1365(b) were intended to apply to control devices for all other emission streams. In the final rule, the provisions from § 63.1365(a) and (b) have been consolidated into one section that specifies monitoring provisions for all control devices (§ 63.1366(b)). The final rule also includes monitoring provisions for nonregenerative carbon canisters; the owner or operator is required to determine the maximum time interval between replacement based on operation under absolute or hypothetical peak-case conditions and to replace the canister before this time elapses.

Unlike the HON, the final PAI rule requires the same type of monitoring regardless of the purpose for which the control device is used. The EPA does not believe it is necessary to have different procedures for storage vessel control devices because the types of emission episodes from storage vessels are comparable to those from batch process vents. Furthermore, most storage vessels at the surveyed PAI plants emit less than 0.91 Mg/yr. Under the final rule, if the total uncontrolled HAP emissions entering a control device are less than 0.91 Mg/yr, the owner or operator may elect to conduct a periodic (at least daily) verification that the control device is operating properly. The verification procedures are to be described in the Precompliance plan. This provision is comparable to the monitoring plan concept described in § 63.120(d)(2) of the HON. On the other hand, if the total uncontrolled HAP emissions entering the control device exceed 0.91 Mg/yr, the owner operator must monitor the appropriate parameter(s) every 15 minutes during which the control device is functioning in achieving the HAP removal required by the rule. Based on information from the surveyed PAI facilities, this situation would apply to very few storage vessels in the PAI industry. Most of the few storage vessels with emissions greater than 0.91 Mg/yr are vented to the same control device that is used to control process vent emissions. Thus, a separate set of monitoring requirements for storage vessel control devices is not needed.

For devices that control more than 0.91 Mg/yr of HAP, the definition of excursion in the final rule is the same as that in the proposed rule, and it is applicable to all control devices. Specifically, a valid hour of monitoring data must be obtained for 75 percent of the hours that a control device operates during a day (or, if the control device operates less than 4 hours, at least 3 hours of valid data must be obtained). As noted above, the control device operation is based on the time when the control device is functioning in achieving the HAP reduction required by the rule. For storage tanks, this means all of the time that the storage tank contains material. When compliance for small control devices is demonstrated by conducting a periodic verification, the final rule has been

revised to clarify that not conducting the verification is an excursion.

The final rule also clarifies that exceedances of operating parameters are those times when (1) the parameter level, averaged over the operating day, is above a maximum or below a minimum established during the initial compliance demonstration, or (2) the required operating characteristic is not met (e.g., loss of all pilot flames for a flare). If compliance is demonstrated by conducting a periodic verification, an exceedance occurs any time the daily, or more frequent, demonstration does not confirm that the control device is operating properly.

5. Violations

Several commenters asserted that excursions or exceedances of an operating parameter should not be violations of the emission standard. Another commenter also stated that failure to take corrective action after a bag dump alarm should be a violation of a work practice requirement, not the emission standard. The commenters stated that such incidents should not be violations of an emission limit because the parameters are only indicators of proper operation, they do not prove compliance with an emission standard. Another commenter stated that the proposed provision conflicts with the basis of the compliance assurance monitoring (CAM) regulation. Two commenters also stated that the requirement in § 63.1365(a) to "operate processes and control devices within the parameters" must be revised. Both commenters interpreted this statement to mean that each data point must be within the established limit. One commenter indicated that the source must be allowed to demonstrate continued compliance with the emission standard despite exceedance of a monitoring parameter. Another commenter stated that (1) monitoring data collected during any startup, shutdown, or malfunction should be excluded from daily averages; (2) the rule should specify that there is no violation if an event such as a malfunction results in insufficient data or an exceedance of a parameter; and (3) the statement that an excursion is not a violation if it happens during a startup, shutdown, or malfunction and the facility follows it startup, shutdown, and malfunction plan is a concern because it could be interpreted to mean that EPA could assess two penalties if the plan is not followed.

The EPA's policy is that new part 63 rules, in particular those that require the use of a control device to reduce pollutant emissions, will include compliance determinations on two levels. The first level is the "traditional" performance test requirement that is based on the use of a specific test method over a set period of time and operating conditions. A performance test is generally conducted at the time the rule is first effective (e.g., at facility startup or after an effective date for an existing facility) and may be repeated periodically thereafter. The results of the performance test are compared with an emission limitation (e.g., concentration, control efficiency, or mass rate). The second level of the compliance determination in part 63 rules is the continuous compliance obligation, which is implemented through monitoring.

In general, EPA recognizes two basic approaches to monitoring. One method is to establish monitoring as a direct measure of continuous compliance. Under this continuous compliance monitoring approach, an enforceable value of the monitored parameters is defined and measured. The Agency has adopted this approach in part 63 standards and is committed to following this approach whenever appropriate in future rulemakings. Another approach is to establish monitoring to provide a reasonable assurance of compliance by documenting continued proper operation of the control devices, indicating excursions from proper operating conditions, and correcting the problems that cause excursions. This second approach is the basis of the CAM rule, which applies to sources that are not currently subject to part 63 standards.

Some part 63 rules specify that compliance be demonstrated continuously using either a continuous emissions monitoring system (CEMS) for a surrogate pollutant or parameter monitoring. In these situations, the rule includes specific limitations and averaging times. The surrogate pollutant or operating parameter limit becomes an enforceable limit for the rule. There is no requirement that an alternative limit, whether a surrogate pollutant or an operational parameter, be statistically correlated with emissions or the compliance level of the regulated pollutant(s). The alternative limit is a separately enforceable requirement of the rule. The alternative is not secondary to the emission limit; rather, it is applied in lieu of a continuous emission limit obligation.

The enforceable level for the surrogate pollutant or operating parameter may be based on measurements made during a performance test or other conditions specified by the part 63 rule. In any case, the alternative limit becomes the continuous compliance obligation and fulfills the second level of compliance for the rule.

The EPA has considered the commenters' argument that an exceedance of a monitoring parameter is not necessarily an exceedance of an emission limit. The Agency acknowledges that a parameter exceedance does not necessarily mean that the source has exceeded the emission limit. However, as discussed above, under the EPA's approach to continuous compliance in part 63 rules, the continuous parameter monitoring limit is a separate requirement that is not rebuttable through contrast with actual or estimated HAP emission values. In addition, EPA believes that given the flexibility the owner or operator has to select operating parameters, including the option that allows the owner or operator to set different parameter levels for different operating conditions, the burden is on the source to remain within the operating limit defined for the parameter or parameters.

To address the potential disparity between parameter limit exceedances and emission limit exceedances, the final rule contains two different types of continuous compliance violations. When a source is using a CEMS to monitor compliance with the 20 ppmv alternative standard, an exceedance is defined as a violation of the emission limit. Similarly, because the exit gas temperature of a condenser is so closely correlated with emissions, a condenser temperature exceedance is considered a violation of the emission limit. Exceedances of other types of parameter limits are defined as violations of an operating limit. Failure to initiate the corrective action plan after a bag leak detector alarm also is a violation of an operating limit.

If monitoring data obtained during a startup, shutdown, or malfunction result in an exceedance, the exceedance is not a violation as long as the facility follows the startup, shutdown, and malfunction plan. If the facility does not follow the plan, an exceedance would be a violation, but it would not be two violations. Thus, the final rule retains the requirement to use data obtained during any startup, shutdown, and malfunction in daily averages.

Similarly, if a startup, shutdown, or malfunction results in the inability to collect monitoring data, it may cause an excursion. This excursion would not be a violation if the facility followed its startup, shutdown, and malfunction plan, but it would be a violation if they did not follow the plan.

As noted above, the final rule requires monitoring when the control device is functioning in achieving the HAP removal required by the rule. Thus, data obtained during time when the process is not operating are not to be used in determining the daily average of the parameter level.

Finally, EPA believes that the language in the final rule is clear regarding the determination of a violation. The final rule no longer contains language specifying that owners and operators "shall operate within established parameter levels." Additionally, EPA believes that the final rule clearly identifies averaging periods for reducing monitoring data and comparing against established parameter levels.

N. Recordkeeping and Reporting

Comments received relating to recordkeeping generally focused on the burden of the extensive recordkeeping required by the regulation. Comments related to reporting focused on dates for submittal of reports, and the burden of submitting all the reports required by the regulation. These comments are discussed below.

1. Recordkeeping Burden

Several commenters took issue with the amount of recordkeeping required by the rule and requested that EPA review the recordkeeping requirements to ensure that the amount of recordkeeping is really necessary. One commenter supports the provisions in § 63.1366(a) and (a)(3) that would require an owner or operator to maintain records of only the daily average of the parameter values not each datapoint, because this reduces the recordkeeping burden. This commenter also stated that the rule should contain a provision similar to the provision in § 63.152(g) of the HON, which allows for retention of only average parameter values, rather than each individual data point.

Detailed records are needed to demonstrate compliance with the regulation. However, prior to proposal, EPA made a concerted effort to eliminate duplicative and unnecessary recordkeeping requirements because EPA recognizes that these requirements would burden both the affected sources and EPA enforcement agencies. Since proposal, EPA has reviewed the recordkeeping provisions and made a number of changes. Many of the changes are editorial revisions designed to clarify the requirements. Some of these clarifications are discussed in more detail in other responses in this chapter. Other clarifications explicitly state recordkeeping requirements that were merely implied in the proposed rule (e.g., records of planned routine maintenance and records of the absolute or hypothetical peak-case conditions for process vent testing).

The final rule also includes additional recordkeeping requirements to document compliance with new or revised provisions in the rule. For example, the final rule includes recordkeeping to document the primary use for material produced by PAI process units if the primary use is not as a PAI (see section 3.2 for a discussion of the new primary use provisions). Another example in the final rule includes procedures to demonstrate ongoing compliance with the annual emission limit for process vents by calculating an annual rolling summation every day, and records of these calculations must be maintained. Finally, § 63.1362(j) was added to the final rule to specify that bypass lines that could divert a vent stream away from a control device must be monitored either with a flow indicator or by visual inspection of the seal or closure mechanism that secures the valve in the closed position; records of any flow or the results of inspections must also be maintained.

One additional change involves the parameter monitoring records in § 63.1366(a) and (a)(3) that were cited by the commenter. After reviewing these requirements, EPA now believes that, even when the daily average is in compliance, it is necessary to maintain all parameter readings, not just the daily averages. This rule requires that owners and operators select only parameter readings that are taken when the control device is controlling HAP emissions from affected emission streams. Emission episodes from batch processes, which predominate in the PAI production industry, are discontinuous. As a result, some monitoring readings may occur during periods of no flow for affected streams (although there may be flow of nonaffected streams). Readings taken during these periods must be excluded from the daily averages. In order to verify that the daily average values were calculated correctly, the rule requires owners and operators to keep all data. The EPA also does not believe that the approach in § 63.152(g) of the HON would be appropriate for this rule because, unlike this rule, the HON regulates emission streams with continuous flow.

2. Reporting Burden

Some commenters stated that the requirement in the proposed rule to submit a Precompliance report should be deleted. Additionally, some commenters requested that the proposed frequency for submitting periodic reports should be changed from quarterly to semiannually to be consistent with other MACT standards.

The final rule retains the requirement to submit a Precompliance report (or Precompliance plan in the final rule). The EPA believes the Precompliance plan is a valuable tool for the regulatory agency that will be making compliance determinations for the affected source. It provides an enforcement official or inspector with some initial background information about the process being controlled, the types of emissions associated with the process, corresponding control equipment, and the monitoring parameters that have been or will be correlated to the process conditions. The Precompliance plan is also the mechanism by which the affected source requests approval to use alternative monitoring parameters and to use calculations or other compliance procedures that differ from those prescribed in the rule. Because many of the compliance procedures for this rule are more complicated than those for the HON, EPA believes the Precompliance plan requirement is warranted for this industry and has retained the provision in the final rule.

The EPA has also reevaluated the overall reporting requirements in the proposed rule and compared the proposed reporting requirements with requirements in rules for similar industries. As a result, the Agency decided to change the periodic reporting from quarterly to semiannually. In those cases where continuous emission monitoring data are used to demonstrate compliance with the 20ppmv alternative standards, and the source experiences excess emissions, quarterly reporting is required until a request to reduce reporting frequency is approved. Section 63.1368(g) in the final rule is now titled "Periodic reports" and details the submittal schedule and content of the required Periodic reports. Also, as a result of comments, the final rule now requires that equipment leak reports be included with the Notification of Compliance Status report and the Periodic reports. The final rule requires that the Periodic reports be submitted within 60 operating days after the end of the applicable reporting period.

Other changes made to the final rule as a result of comments include the addition of a new section to address the submittal of information describing process changes or changes made in the information submitted as part of the Notification of Compliance Status

report. This information must be submitted within 90 days after the changes are made. The information may be included as part of a Periodic report, if one is to be submitted within the 90-day period. The information to be reported is to include: a brief description of the process change, a description of any modifications to standard procedures or quality assurance procedures, revisions to any of the information reported in the original Notification of Compliance Status Report, and information required by the Notification of Compliance Status report for changes involving the addition of processes or equipment.

3. Date for Submittal of Notification of Compliance Status Report

One commenter stated that the Notification of Compliance Status report submittal date in the proposed rule conflicts with the requirements of the General Provisions in § 63.7(a)(2) to complete performance testing within 180 days and § 63.10(d)(2) to submit performance test reports within 60 days after tests.

The submittal date for the Notification of Compliance Status report in § 63.1368(f) of the final rule does not conflict with the General Provisions requirements in §§ 63.7(a)(2) and 63.10(d)(2), it supersedes it. As noted in Table 1 to Subpart MMM—General Provisions Applicability to Subpart MMM, "[T]est results must be submitted in the Notification of Compliance Status report due 150 days after the compliance date." This means that the performance testing and the compilation of the test results must be completed and submitted as part of the Notification of Compliance Status report which is due within 150 days after the compliance date. Additional language was added to the final rule under § 63.1368(a) to clarify which of the reporting requirements of subpart A (General Provisions) remain in effect for this rule and which requirements have been superseded.

O. Miscellaneous

1. Environmental Impacts

One commenter believes EPA did not adequately consider the secondary air impacts of nitrogen oxide (NO_X) formation caused by combusting nitrogen-bearing HAP (and non-HAP VOC that may also be present) in process vent streams and wastewater.

The impacts analysis was based on a small number of model streams with characteristics that represent typical or average characteristics of streams at the surveyed facilities. Very little nitrogen-bearing HAP is emitted from the surveyed facilities (less than 5 percent of both the total uncontrolled organic HAP emissions from process vents and the HAP load in wastewater streams), and most of these HAP are controlled to the level of the standard. Therefore, the model emission streams that were used to estimate secondary air impacts did not include nitrogen-bearing HAP. In addition, any small underestimate in the NO_X emissions from nitrogen-bearing HAP is likely more than offset by the use of conservative estimates in the original analysis. For example, the estimated increase in NO_X emissions were based solely on the emissions associated with operation of the more efficient controls needed to achieve the level of the standards; emissions from existing controls that would be replaced were assumed to be negligible.

2. Cost Impacts

Two commenters believe EPA underestimated the costs to comply with the proposed rule. Based on recent experience installing some of the control devices that are used in the cost analysis, one commenter believes the costs are "significantly" underestimated, especially when the standard is more stringent than the floor. This commenter also indicated that, based on the additional secondary air impact described in the comment above, the cost analysis should consider the need to install best available control technology (BACT) or RACT to control NO_X emissions.

The other commenter believes none of the models used in the cost analysis adequately address the situation at the commenter's facility. This commenter operates an affected source that emits carbon disulfide, which, when burned, generates a significant amount of sulfur oxides (SO_X). The SO_X is not an issue under the MACT standard, but it is a criteria pollutant that would have to be controlled under State regulations. As a result, the commenter believes EPA's cost analysis underestimates the cost the commenter would face for two reasons. First, the model is based on a thermal incinerator with 70 percent recuperative heat recovery, but the commenter could not use this control device because carbon disulfide has a low auto-ignition temperature; they would have to use either a thermal incinerator with no heat recovery or a regenerative thermal oxidizer with 85 percent heat recovery. Second, the scrubber that follows the incinerator would need to be able to control the SO_X emissions as well as HCl emissions.

The cost impacts were based on models that represent a range of characteristics at actual facilities. The models are expected to overestimate costs at some facilities and to underestimate costs at others.

It is possible that installing a control device could trigger the requirement for a BACT or RACT analysis. Typically, to trigger BACT analysis, the control device would have to cause a net increase in NO_X emissions of 40 tons/yr (or any amount that has an impact of 1 microgram per cubic meter within 10 kilometers of a class I area). To increase emissions by 40 tons/yr would require a very large incinerator; the incinerator to control the largest model process was estimated to increase NO_X emissions by only about 11 tons/yr. Typically, a facility has only two PAI processes. Thus, even if all emission streams are routed to the incinerator and the emission stream contains nitrogen-bearing HAP, it will be a very unusual situation for NO_X emissions to increase by 40 tons/yr. Typically, RACT is applied only to existing sources; thus, a new incinerator installed to comply with today's final rule would not trigger RACT. As a result, EPA did not include BACT or RACT technology in the models used in the impacts analyses.

The SO_X control also was not included in the cost analysis because it is not a typical requirement, the amount of SO_2 control that would be needed is unknown, and the cost is not expected to be significantly different from that for an HCl scrubber. The total annual cost of a thermal incinerator with no heat recovery is approximately equal to that for a thermal incinerator with 70 percent recuperative heat recovery. The annual auxiliary fuel costs would be higher for the incinerator without heat recovery, but these costs are nearly offset by lower capital costs, which would result in lower capital recovery costs. Although the performance of a given scrubber will be better for HCl than for SO_2, a scrubber can easily be designed to obtain excellent SO_2 removal efficiencies.

3. Economic Impacts

One commenter believes EPA has not adequately evaluated the impact of the proposed rule on small businesses. The commenter notes that the regulatory flexibility analysis finds minimal impact on small businesses, but the docket states that the two known small firms for which data were available were not surveyed to find the impact of the regulation on them. The commenter believes a survey of small businesses is needed; otherwise the impact on them is unknown. This issue is important to the commenter because at the time facilities responded to the section 114

information request, the commenter's plant was part of a large business, but it has since been sold and is now classified as a small business.

The EPA reevaluated the economic impact using revenue data for the commenter's facility. Using Dun & Bradstreet data, EPA estimates that the cost-to-revenue ratio for this small business is approximately 2.3 percent. As noted at proposal, the control costs for model small businesses were also estimated to be less than 3 percent of revenue for model plants. This percentage suggests that the final rule will not significantly impact small firms in the PAI manufacturing industry.

4. Standards for Possible Endocrine Disruptors

In the preamble to the proposed rule, EPA solicited comment on whether the risk posed by possible endocrine disruptors warrants more stringent requirements than those proposed. Numerous commenters opposed the development of more stringent requirements; none supported the idea. The commenters cited the following reasons for not developing more stringent requirements: (1) The science for determining disrupting properties of chemicals and their risks is still under development; (2) technology-based standards are not appropriate to address endocrine disruption; (3) endocrine disruption is not an adverse endpoint, but a mechanism of action; (4) the compounds are emitted in small quantities; and (5) this has not been an issue under other MACT standards that address essentially the same materials.

In the proposal preamble, EPA indicated that available information shows emissions of possible endocrine disruptors is very low relative to other HAP emissions. Based on these data and the comments, EPA has decided not to include more stringent requirements for possible endocrine disruptors in today's final rule. Today's final rule does not preclude the possibility that EPA may take action on endocrine disruptors in the future as new information becomes available.

5. Risk-Based Standards for HCl

The preamble to the proposed rule explained that section 112(d)(4) of the CAA provides EPA with authority, at its discretion, to develop risk-based standards for HAP "for which a health threshold has been established," provided that the standard achieves an "ample margin of safety." Because HCl is a threshold pollutant that is emitted from PAI manufacturing facilities, EPA solicited comment on the adequacy, desirability, and feasibility of developing a risk-based standard instead of a MACT standard for HCl emissions from PAI manufacturing facilities. One commenter opposed the development of a risk-based standard for HCl emissions because it would delay promulgation of the rule. Another commenter opposed development of a risk-based standard because the commenter believes the proposed requirements, in conjunction with permit limitations based on ambient concentrations, are protective of the environment and human health. Another commenter supported EPA's determination of HCl as a threshold pollutant.

The EPA agrees with the commenter that a risk-based approach would delay promulgation of the rule. Given the relatively small potential difference between a MACT-based standard and a risk-based standard, EPA believes that the small benefits are substantially outweighed by the burden to EPA and the industry of collecting and analyzing the data needed for a risk-based standard.

VII. Technical Amendment to 40 CFR Part 9

In compliance with the Paperwork Reduction Act (PRA), this technical correction amends the table that lists the OMB control numbers issued under the PRA for this final rule.

The EPA is today amending the table in 40 CFR part 9 (section 9.1) of currently approved information collection request (ICR) control numbers issued by OMB for various regulations. The affected regulations are codified at 40 CFR part 63 subpart MMM, §§ 63.1366 and 63.1367 (recordkeeping and reporting requirements, respectively). The OMB control (tracking) number for this final rule is 2060–0370. The EPA will continue to present OMB control numbers in a consolidated table format to be codified in 40 CFR part 9 of the Agency's regulations and in each CFR volume containing EPA regulations. The table lists the section numbers with reporting and recordkeeping requirements and the current OMB control numbers. The listing of the OMB control numbers and their subsequent codification in the CFR satisfies the requirements of the PRA (44 U.S.C. 3501 *et seq.*) and OMB's implementing regulations at 5 CFR part 1320.

This ICR was previously subject to public notice and comment prior to OMB approval. As a result, EPA finds that there is "good cause" under section 553(b)(B) of the Administrative Procedure Act (5 U.S.C. 553(b)(B)) to amend this table without prior notice and comment. Due to the technical nature of the table, further notice and comment would be unnecessary.

VIII. Administrative Requirements

A. Docket

The docket is an organized and complete file of all the information submitted to or otherwise considered by EPA in the development of the final standards. The principal purposes of the docket are:

(1) To allow interested parties to readily identify and locate documents so that they can intelligently and effectively participate in the rulemaking process; and

(2) To serve as the record in case of judicial review (except for interagency review materials (section 307(d)(7)(A))).

B. Executive Order 12866

Under Executive Order 12866 (58 FR 51735, October 4, 1993), the Agency must determine whether the regulatory action is "significant" and therefore subject to OMB review and the requirements of this Executive Order. The Executive Order defines "significant regulatory action" as one that is likely to result in a rule that may:

(1) Have an annual effect on the economy of $100 million or more or adversely affect in a material way the economy, a sector of the economy, productivity, competition, jobs, the environment, public health or safety, or State, local, or tribal governments or communities;

(2) Create a serious inconsistency or otherwise interfere with an action taken or planned by another agency;

(3) Materially alter the budgetary impact of entitlements, grants, user fees, or loan programs or the rights and obligations of recipients thereof; or

(4) Raise novel legal or policy issues arising out of legal mandates, the President's priorities, or the principles set forth in this Executive Order.

Pursuant to the terms of Executive Order 12866, the OMB has notified EPA that it considers this a "significant regulatory action" under criterion number four of the Executive Order. The EPA submitted this action for OMB review. The OMB cleared this action without any comments.

C. Executive Order 12875

Under Executive Order 12875, EPA may not issue a regulation that is not required by statute that creates a mandate upon a State, local, or tribal government, unless the Federal government provides the funds necessary to pay the direct compliance costs incurred by those governments, or

EPA consults with those governments. If EPA complies by consulting, Executive Order 12875 requires EPA to provide to the Office of Management and Budget a description of the extent of EPA's prior consultation with representatives of affected State, local, and tribal governments, the nature of their concerns, any written communication from the governments, and a statement supporting the need to issue the regulation. In addition, Executive Order 12875 requires EPA to develop an effective process permitting elected officials and other representatives of State, local, and tribal governments "to provide meaningful and timely input in the development of regulatory proposals containing significant unfunded mandates."

Today's rule does not create a mandate on State, local, or tribal governments. The rule does not impose any enforceable duties on these entities because they do not own or operate sources subject to this rule and therefore are not required to purchase control systems to meet the requirements of this rule. Accordingly, the requirements of section 1(a) of Executive Order 12875 do not apply to this rule.

D. Executive Order 13084

Under Executive Order 13084, EPA may not issue a regulation that is not required by statute that significantly or uniquely affects the communities of Indian tribal governments, and that imposes substantial direct compliance costs on those communities, unless the Federal government provides the funds necessary to pay the direct compliance costs incurred by the tribal governments, or EPA consults with those governments. If EPA complies by consulting, Executive Order 13084 requires EPA to provide to the Office of Management and Budget in a separately identified section of the preamble to the rule, a description of the extent of EPA's prior consultation with representatives of affected tribal governments, a summary of the nature of their concerns, and a statement supporting the need to issue the regulation. In addition, Executive Order 13084 requires EPA to develop an effective process permitting elected officials and other representatives of Indian tribal governments "to provide meaningful and timely input in the development of regulatory policies on matters that significantly or uniquely affect their communities."

Today's rule does not significantly or uniquely affect the communities of Indian tribal governments. The rule does not affect these entities because they do not own or operate sources subject to this rule and therefore are not required to purchase control systems to meet the requirements of this rule. Accordingly, the requirements of section 3(b) of Executive Order 13084 do not apply to this rule.

E. Paperwork Reduction Act

The OMB has approved the information collection requirements contained in this rule under the provisions of the Paperwork Reduction Act, 44 U.S.C. 3501 *et seq.* and has assigned OMB Control Number 2060-0370.

The EPA is required under section 112(d) of the CAA to regulate emissions of HAP listed in section 112(b). The requested information is needed as part of the overall compliance and enforcement program. The ICR requires that pesticide active ingredient production facilities retain records of control device monitoring and records of HAP emissions calculations at facilities for a period of 5 years, which is consistent with the General Provisions to 40 CFR part 63 and the operating permit requirements under 40 CFR part 70. All sources subject to this rule will be required to obtain operating permits either through the State-approved permitting program or, if one does not exist, in accordance with the provisions of 40 CFR part 71, when promulgated.

The public reporting burden for this collection of information is estimated to average 289 hours per respondent for each of the first 3 years following promulgation. Beginning in the fourth year after promulgation, existing facilities must comply with the monitoring requirements, which will result in a significant increase in the burden to the industry. It is also estimated that there are approximately 82 facilities that are likely respondents. Burden means the total time, effort, or financial resources expended by persons to generate, maintain, retain, or disclose or provide information to or for a Federal agency. This includes the time needed to: review instructions; develop, acquire, install, and utilize technology and systems for the purposes of collecting, validating, and verifying information, processing and maintaining information, and disclosing and providing information; adjust the existing ways to comply with any previously applicable instructions and requirements; train personnel to be able to respond to a collection of information; search data sources; complete and review the collection of information; and transmit or otherwise disclose the information.

An Agency may not conduct or sponsor, and a person is not required to respond to, a collection of information unless it displays a currently valid OMB control number. The OMB control numbers for EPA's regulations are listed in 40 CFR part 9 and 48 CFR Chapter 15. The EPA is amending Table 9.1 in 40 CFR part 9 of currently approved ICR control numbers issued by OMB for various regulations to list the information collection requirements contained in this final rule.

F. Regulatory Flexibility

The EPA has determined that it is not necessary to prepare a regulatory flexibility analysis in connection with this final rule. The EPA has also determined that this rule will not have a significant economic impact on a substantial number of small entities.

In screening the potential impacts on small entities, the EPA found that there are three companies operating in the PAI production industry that will be subject to the final rule that are considered "small" businesses as defined by the Small Business Administration (SBA). The SBA defines small businesses in SIC 2879 as a firm with fewer than 500 employees. The majority of facilities are owned by large chemical manufacturers having greater than 500 employees. In all instances, the average total annual cost for each of the affected small firms is less than 3 percent of company-wide sales revenues. The screening analysis for this rule is detailed in the Economic Impact Analysis and a subsequent memorandum (see Docket No. A-95-20, Docket item no. II-A-20 and IV-B-7).

G. Unfunded Mandates

Title II of the Unfunded Mandates Reform Act of 1995 (UMRA), Pub. L. 104-4, establishes requirements for Federal agencies to assess the effects of their regulatory actions on State, local, and tribal governments, and the private sector. Under Section 202 of the UMRA, EPA generally must prepare a written statement, including a cost-benefit analysis, for proposed and final rules with "Federal mandates" that may result in expenditures by State, local, and tribal governments, in the aggregate, or by the private sector, of $100 million or more in any 1 year. Before promulgating an EPA rule for which a written statement is needed, section 205 of the UMRA generally requires EPA to identify and consider a reasonable number of regulatory alternatives and adopt the least costly, most cost effective, or least burdensome alternative that achieves the objectives of the rule. The provisions of section

205 do not apply when they are inconsistent with applicable law. Moreover, section 205 allows EPA to adopt an alternative other than the least costly, most cost effective, or least burdensome alternative if the Administrator publishes with the final rule an explanation why that alternative was not adopted. Before EPA establishes any regulatory requirements that may significantly or uniquely affect small governments, including tribal governments, it must have developed under section 203 of the UMRA a small government agency plan. The plan must provide for notifying potentially affected small governments, enabling officials of affected small governments to have meaningful and timely input in the development of EPA regulatory proposals with significant Federal intergovernmental mandates, and informing, educating, and advising small governments on compliance with the regulatory requirements.

The EPA has determined that the final standards do not include a Federal mandate that may result in expenditures of $100 million or more by either State, local, or tribal governments, in the aggregate, or by the private sector, in any 1 year. The rule does not impose any enforceable duties on State, local, or tribal governments because they do not own or operate sources subject to this rule and therefore are not required to purchase control systems to meet the requirements of this rule. The annual economic impact on the private sector will be far less than $100 million—the estimated cost impact is $39.4 million/yr, as discussed in section IV.D. of today's final rule. The rule also contains no requirements that will significantly or uniquely impact small governments: the rule contains no requirements that apply to such governments or impose obligations upon them. Therefore, the requirements of the UMRA do not apply to this final rule.

H. Submission to Congress and the Comptroller General Office

The Congressional Review Act, 5 U.S.C. 801 *et seq.*, as added by the Small Business Regulatory Enforcement Fairness Act of 1996, generally provides that before a rule may take effect, the agency promulgating the rule must submit a rule report, which includes a copy of the rule, to each House of the Congress and to the Comptroller General of the United States. The EPA will submit a report containing this rule and other required information to the U.S. Senate, the U.S. House of Representatives, and the Comptroller General of the United States prior to publication of the rule in the **Federal Register**. This rule is not a "major rule" as defined by 5 U.S.C. § 804(2).

I. National Technology Transfer and Advancement Act

Section 12(d) of the National Technology Transfer and Advancement Act (NTTAA), Pub. L. 104–113 (March 7, 1996), directs all Federal agencies to use voluntary consensus standards in regulatory and procurement activities unless to do so would be inconsistent with applicable law or otherwise impracticable. Voluntary consensus standards are technical standards (e.g., materials specifications, test methods, sampling procedures, and business practices) developed or adopted by one or more voluntary consensus bodies. The NTTAA requires Federal agencies to provide Congress, through annual reports to OMB, with explanations when an agency does not use available and applicable voluntary consensus standards. This section summarizes the EPA's response to the requirements of the NTTAA for the analytical and test methods to be required by today's final rule.

Consistent with the NTTAA, the EPA conducted a search to identify voluntary consensus standards. The search identified 22 voluntary consensus standards that appeared to have possible use in lieu of EPA standard reference methods in this rule. However, after reviewing available standards, EPA determined that 14 of the candidate consensus standards identified for measuring emissions of the HAP or surrogates subject to emission standards in the rule would not be practical due to lack of equivalency, documentation, validation data or other important technical and policy considerations. Eight of the remaining candidate consensus standards are new standards under development that EPA plans to follow, review, and consider adopting at a later date.

One consensus standard, ASTM Z7420Z, is potentially practical for EPA use in lieu of EPA Method 18 (See 40 CFR Part 60, Appendix A). At the time of EPA's search, the ASTM standard was still under development and EPA had provided comments on the method. The EPA also compared a draft of this ASTM standard to methods previously approved as alternatives to EPA Method 18 with specific applicability limitations. These methods, designated as ALT–017 and CTM–028, are available through EPA's Emission Measurement Center Internet site at www.epa.gov/ttn/emc/tmethods.html. The proposed ASTM Z7420Z standard is very similar to these approved alternative methods. When finalized and adopted by ASTM, the standard may be equally suitable for specific applications. However, this rule does not adopt the ASTM standard as it is not practical to do so until the potential candidate is final and EPA has reviewed the final standard. The EPA plans to continue to follow the progress of the standard and will consider adopting the ASTM standard at a later date.

This final rule requires standard EPA methods known to the industry and States. Approved alternative methods also may be used with prior EPA approval.

J. Executive Order 13045

Executive Order 13045, "Protection of Children from Environmental Health Risks and Safety Risks" (62 FR 19885, April 23, 1997), applies to any rule that: (1) is determined to be "economically significant" as defined under Executive Order 12866, and (2) concerns an environmental health or safety risk that EPA has reason to believe may have a disproportionate effect on children. If the regulatory action meets both criteria, the Agency must evaluate the environmental health or safety effects of the planned rule on children, and explain why the planned regulation is preferable to other potentially effective and reasonably feasible alternatives considered by the Agency.

The EPA interprets Executive Order 13045 as applying only to those regulatory actions that are based on health or safety risks, such that the analysis required under section 5–501 of the Executive Order has the potential to influence the regulation. Today's final rule falls into that category only in part: the minimum rule stringency is set according to a congressionally-mandated, technology-based lower limit called the "floor," while a decision to increase the stringency beyond this floor can be based on risk considerations only to the extent that the Agency may consider the inherent toxicity of a regulated pollutant, and any differential impact such a pollutant may have on children's health, in deciding whether to adopt control requirements more stringent than floor level.

Today's final rule is not subject to Executive Order 13045 because it is not economically significant as defined in Executive Order 12866. No children's risk analysis was performed for this rulemaking because no alternative technologies exist that would provide greater stringency at a reasonable cost, and therefore the results of any such analysis would have no impact on the stringency decision. The MACT floor and regulatory alternatives more stringent than the floor for process

vents, storage vessels, equipment leaks, and wastewater systems are presented in Chapters 6 and 8 of the Basis and Purpose Document and related memoranda (Docket A-95-20, Docket items II-B-21, III-B-1, IV-B-2, and IV-B-3). For each of the four types of emission points, the standards are based on the most stringent alternative for which the cost was determined to be reasonable.

List of Subjects

40 CFR Part 9

Environmental protection, Reporting and recordkeeping requirements.

40 CFR Part 63

Environmental protection, Air pollution control, Hazardous substances, Reporting and recordkeeping requirements.

Dated: May 13, 1999.

Carol M. Browner,

Administrator.

For the reasons set out in the preamble, parts 9 and 63 of title 40, chapter I, of the Code of Federal Regulations are amended as follows:

PART 9—[AMENDED]

1. The authority citation for part 9 continues to read as follows:

Authority: 7 U.S.C. 135 *et seq.*, 136-136y; 15 U.S.C. 2001, 2003, 2005, 2006, 2601-2671; 21 U.S.C. 331j, 346a, 348; 31 U.S.C. 9701; 33 U.S.C. 1251 *et seq.*, 1311, 1313d, 1314, 1318, 1321, 1326, 1330, 1342, 1344, 1345 (d) and (e), 1361; E.O. 11735, 38 FR 21243, 3 CFR, 1971-1975 Comp. p. 973; 42 U.S.C. 241, 242b, 243, 246, 300f, 300g, 300g-1, 300g-2, 300g-3, 300g-4, 300g-5, 300g-6, 300j-1, 300j-2, 300j-3, 300j-4, 300j-9, 1857 *et seq.*, 6901-6992k, 7401-7671g, 7542, 9601-9657, 11023, 11048.

2. Section 9.1 is amended by adding in numerical order a new entry to the table under the indicated heading to read as follows:

§ 9.1 OMB approvals under the Paperwork Reduction Act.

* * * * * * *

40 CFR citation	OMB Control No.
* * * * * * *	
National Emission Standards for Hazardous Air Pollutants for Source Categories.[3]	
* * * * * * *	
63.1367–63.1368	2060–0370
* * * * * * *	

[3] The ICR's referenced in this section of the table encompass the applicable General Provisions contained in 40 CFR part 63, subpart A, which are not independent information collection requirements.

PART 63—[AMENDED]

1. The authority citation for part 63 continues to read as follows:

Authority: 42 U.S.C. 7401, *et. seq.*

2. Part 63 is amended by adding a new subpart MMM to read as follows:

Subpart MMM—National Emission Standards for Hazardous Air Pollutants for Pesticide Active Ingredient Production

Sec.
63.1360 Applicability.
63.1361 Definitions.
63.1362 Standards.
63.1363 Standards for equipment leaks.
63.1364 Compliance dates.
63.1365 Test methods and initial compliance procedures.
63.1366 Monitoring and inspection requirements.
63.1367 Recordkeeping requirements.
63.1368 Reporting requirements.
63.1369 Delegation of authority.
Table 1 to Subpart MMM of part 63—General Provisions Applicability to Subpart MMM.
Table 2 to Subpart MMM of part 63—Standards for New and Existing PAI Production.
Table 3 to Subpart MMM of Part 63—Monitoring Requirements for Control Devices.
Table 4 to Subpart MMM of Part 63—Control Requirements for Items of Equipment that Meet the Criteria of § 63.1362(k).

Subpart MMM—National Emission Standards for Hazardous Air Pollutants for Pesticide Active Ingredient Production

§ 63.1360 Applicability.

(a) *Definition of affected source.* The affected source subject to this subpart is the facility-wide collection of pesticide active ingredient manufacturing process units (PAI process units) that process, use, or produce HAP, and are located at a plant site that is a major source, as defined in section 112(a) of the CAA. An affected source also includes waste management units, heat exchange systems, and cooling towers that are associated with the PAI process units. Exemptions from an affected source are specified in paragraph (d) of this section.

(b) *New source applicability.* A new affected source subject to this subpart and to which the requirements for new sources apply is defined according to the criteria in either paragraph (b)(1) or (2) of this section.

(1) An affected source for which construction or reconstruction commenced after November 10, 1997.

(2) Any single PAI process unit that:

(i) Is not part of a process unit group; and

(ii) For which construction, as defined in § 63.1361, commenced after November 10, 1997; and

(iii) Has the potential to emit 10 tons/yr of any one HAP or 25 tons/yr of combined HAP.

(c) *General provisions.* Table 1 of this subpart specifies the provisions of subpart A of this part that apply to an owner or operator of an affected source subject to this subpart, and clarifies specific provisions in subpart A of this part as necessary for this subpart.

(d) *Exemptions from the requirements of this subpart.* The provisions of this subpart do not apply to:

(1) Research and development facilities;

(2) PAI process units that are subject to subpart F of this part;

(3) Production of ethylene; and

(4) The following emission points listed:

(i) Storm water from segregated sewers;

(ii) Water from fire-fighting and deluge systems, including testing of such systems;

(iii) Spills;

(iv) Water from safety showers;

(v) Noncontact steam boiler blowdown and condensate;

(vi) Laundry water;

(vii) Vessels storing material that contains no organic HAP or contains organic HAP as impurities only; and

(viii) Equipment, as defined in § 63.1363, that is intended to operate in organic HAP service for less than 300 hours during the calendar year.

(e) *Applicability of this subpart except during periods of startup, shutdown, and malfunction.* (1) Each provision set forth in this subpart shall apply at all times except that emission limitations shall not apply during periods of startup, shutdown, and malfunction, as defined in § 63.1361, if:

(i) The startup, shutdown, or malfunction precludes the ability of the owner or operator of an affected source to comply with one or more specific emission limitations to which a particular emission point is subject; and

(ii) The owner or operator follows the provisions for periods of startup, shutdown, and malfunction, as specified in §§ 63.1367(a)(3) and 63.1368(i).

(2) The provisions set forth in § 63.1363 shall apply at all times except during periods of nonoperation of the PAI process unit (or specific portion thereof) in which the lines are drained and depressurized resulting in the cessation of the emissions to which § 63.1363 applies.

(3) The owner or operator shall not shut down items of equipment that are required or utilized for compliance with the emissions limitations of this subpart during times when emissions (or, where applicable, wastewater streams or residuals) are being routed to such items of equipment, if the shutdown would contravene emissions limitations of this subpart applicable to such items of equipment. This paragraph does not apply if the item of equipment is malfunctioning, or if the owner or operator must shut down the equipment to avoid damage due to a malfunction of the PAI process unit or portion thereof.

(4) During startups, shutdowns, and malfunctions when the emissions limitations of this subpart do not apply pursuant to paragraphs (e)(1) through (3) of this section, the owner or operator shall implement, to the extent reasonably available, measures to prevent or minimize excess emissions. For purposes of this paragraph, "excess emissions" means emissions in excess of those that would have occurred if there were no startup, shutdown, or malfunction and the owner or operator complied with the relevant provisions of this subpart. The measures to be taken shall be identified in the applicable startup, shutdown, and malfunction plan, and may include, but are not limited to, air pollution control technologies, work practices, pollution prevention, monitoring, and/or changes in the manner of operation of the source. Back-up control devices are not required, but may be used if available.

(f) *Storage vessel applicability determination.* An owner or operator shall follow the procedures specified in paragraphs (f)(1) through (4) of this section to determine whether a storage vessel is part of the affected source to which this subpart applies.

(1) If a storage vessel is already subject to another subpart of 40 CFR part 63 on June 23, 1999, the storage vessel shall belong to the process unit subject to the other subpart.

(2) Unless otherwise excluded under paragraph (f)(1) of this section, the storage vessel is part of a PAI process unit if either the input to the vessel from the PAI process unit is greater than or equal to the input from any other PAI or non-PAI process unit, or the output from the vessel to the PAI process unit is greater than or equal to the output to any other PAI or non-PAI process unit. If the greatest input to and/or output from a shared storage vessel is the same for two or more process units, including at least one PAI process unit, the owner or operator may assign the storage vessel to any one of the PAI process units that meet this condition. If the use varies from year to year, then the use for purposes of this subpart for existing sources shall be based on the utilization that occurred during the year preceding June 23, 1999 or, if the storage vessel was not in operation during that year, the use shall be based on the expected use in the 5 years after startup. This determination shall be reported as part of an operating permit application or as otherwise specified by the permitting authority.

(3) Unless otherwise excluded under paragraph (f)(1) of this section, where a storage vessel is located in a tank farm (including a marine tank farm), the applicability of this subpart shall be determined according to the provisions in paragraphs (f)(3)(i) through (iv) of this section.

(i) The storage vessel may only be assigned to a process unit that utilizes the storage vessel and does not have an intervening storage vessel for that product (or raw material, as appropriate). With respect to a process unit, an intervening storage vessel means a storage vessel connected by hard-piping to the process unit and to the storage vessel in the tank farm so that product or raw material entering or leaving the process unit flows into (or from) the intervening storage vessel and does not flow directly into (or from) the storage vessel in the tank farm.

(ii) If no PAI process unit meets the criteria of paragraph (f)(3)(i) of this section with respect to a storage vessel, this subpart does not apply to the storage vessel.

(iii) If only one PAI process unit, and no non-PAI process unit, meets the criteria of paragraph (f)(3)(i) of this section with respect to a storage vessel, the storage vessel shall be assigned to that PAI process unit.

(iv) If two or more process units, including at least one PAI process unit, meet the criteria of paragraph (f)(3)(i) of this section with respect to a storage vessel, the storage vessel shall be assigned to one of those process units according to the provisions of paragraph (f)(2) of this section. The input and output shall be determined among only those process units that meet the criteria of paragraph (f)(3)(i) of this section. If the storage vessel is not assigned to a PAI process unit according to the provisions of paragraph (f)(2) of this section, this subpart does not apply to the storage vessel.

(4) If the storage vessel begins receiving material from (or sending material to) another process unit, or ceasing to receive material from (or send material to) a PAI process unit, or if the applicability of this subpart has been determined according to the provisions of paragraph (f)(2) of this section, and there is a significant change in the use of the storage vessel, the owner or operator shall reevaluate the ownership determination for the storage vessel.

(g) *Designating production of an intermediate as a PAI process unit.* Except as specified in paragraph (d) of this section, an owner or operator may elect to designate production of any intermediate that does not meet the definition of integral intermediate as a PAI process unit subject to this subpart. Any storage vessel containing the intermediate is assigned to a PAI process unit according to the procedures in paragraph (f) of this section. Any process tank containing the intermediate is part of the process unit used to produce the intermediate.

(h) *Applicability of process units included in a process unit group.* (1) If any of the products produced in the process unit group are subject to 40 CFR part 63, subpart GGG (Pharmaceuticals MACT), the owner or operator may elect to comply with the requirements of subpart GGG for the PAI process unit(s) within the process unit group, except for the following:

(i) The emission limit standard for process vents in § 63.1362(b)(2)(i) shall apply in place of § 63.1254(a)(1) of subpart GGG of this part;

(ii) When the date of April 2, 1997 is provided in § 63.1254(a)(iii) of subpart GGG of this part, the date of June 23, 1999 shall apply for purposes of this subpart; and

(iii) Requirements in § 63.1367(a)(5) regarding application for approval of construction or reconstruction shall apply in place of the provisions in § 63.1259(a)(5) of subpart GGG of this part.

(2) If the primary product of a process unit group is determined to be a material that is subject to another subpart of 40 CFR part 63 on June 23, 1999 or startup of the process unit group, whichever is later, the owner or operator may elect to comply with the other subpart for any PAI process unit within the process unit group.

(3) The primary product of the process unit group shall be determined according to paragraphs (h)(3)(i) and (ii) of this section.

(i) The primary product is the product that is produced for the greatest operating time over a 5 year period, based on expected utilization for the 5 years following the compliance date or following initial startup of the process unit group, whichever is later; or

(ii) If the process unit group produces multiple products equally based on operating time, then the product with the greatest production on a mass basis over 5 years shall represent the primary product of the process unit, based on expected utilization for the 5 years following the compliance date or following initial startup of the unit or unit group, whichever is later.

(i) *Overlap with other regulations.* (1) *Overlap with other MACT standards.* After the compliance dates specified in § 63.1364, an affected source subject to the provisions of this subpart that is also subject to the provisions of any other subpart of 40 CFR part 63 may elect, to the extent the subparts are consistent, under which subpart to maintain records and report to EPA. The affected source shall identify in the Notification of Compliance Status report required by § 63.1368(f) under which authority such records will be maintained.

(2) *Overlap with RCRA subparts AA, BB, and/or CC.* After the compliance dates specified in § 63.1364, if any affected source subject to this subpart is also subject to monitoring, recordkeeping, and reporting requirements in 40 CFR part 264, subpart AA, BB, or CC, or is subject to monitoring and recordkeeping requirements in 40 CFR part 265, subpart AA, BB, or CC, and the owner or operator complies with the periodic reporting requirements under 40 CFR part 264, subpart AA, BB, or CC that would apply to the device if the facility had final-permitted status, the owner or operator may elect to comply either with the monitoring, recordkeeping, and reporting requirements of this subpart, or with the monitoring, recordkeeping, and reporting requirements in 40 CFR parts 264 and/or 265, as described in this paragraph, which shall constitute compliance with the monitoring, recordkeeping, and reporting requirements of this subpart. If the owner or operator elects to comply with the monitoring, recordkeeping, and reporting requirements in 40 CFR parts 264 and/or 265, the owner or operator shall report all excursions as required by § 63.1368(g). The owner or operator shall identify in the Notification of Compliance Status report required by § 63.1368(f) the monitoring, recordkeeping, and reporting authority under which the owner or operator will comply.

(3) *Overlap with NSPS subpart Kb.* After the compliance dates specified in § 63.1364, a Group 1 or Group 2 storage vessel that is also subject to the provisions of 40 CFR part 60, subpart Kb, is required to comply only with the provisions of this subpart MMM.

(4) *Overlap with subpart I.* After the compliance dates specified in § 63.1364, for all equipment within a process unit that contains equipment subject to subpart I of this part, an owner or operator may elect to comply with either the provisions of this subpart MMM or the provisions of subpart H of this part. The owner or operator shall identify in the Notification of Compliance Status report required by § 63.1368(f) the provisions with which the owner or operator elects to comply.

(5) *Overlap with RCRA regulations for wastewater.* After the compliance dates specified in § 63.1364, the owner or operator of an affected wastewater stream that is also subject to provisions in 40 CFR parts 260 through 272 shall comply with the more stringent control requirements (e.g., waste management units, numerical treatment standards, etc.) and the more stringent testing, monitoring, recordkeeping, and reporting requirements that overlap between the provisions of this subpart and the provisions of 40 CFR parts 260 through 272. The owner or operator shall keep a record of the information used to determine which requirements were the most stringent and shall submit this information if requested by the Administrator.

(6) *Overlap with NSPS subparts III, NNN, and RRR.* After the compliance dates specified in § 63.1364, if an owner or operator of a process vent subject to this subpart MMM that is also subject to the provisions of 40 CFR part 60, subpart III, or subpart NNN, or subpart RRR, elects to reduce organic HAP emissions from the process vent by 98 percent as specified in § 63.1362(b)(2)(iii)(A), then the owner or operator is required to comply only with the provisions of this subpart MMM. Otherwise, the owner or operator shall comply with the provisions in both this subpart MMM and the provisions in 40 CFR part 60, subparts III, NNN, and RRR, as applicable.

(j) *Meaning of periods of time.* All terms in this subpart MMM that define a period of time for completion of required tasks (e.g., weekly, monthly, quarterly, annual), unless specified otherwise in the section or subsection that imposes the requirement, refer to the standard calendar periods.

(1) Notwithstanding time periods specified in the subpart MMM for completion of required tasks, such time periods may be changed by mutual agreement between the owner and operator and the Administrator, as specified in subpart A of this part (e.g., a period could begin on the compliance date or another date, rather than on the first day of the standard period). For each time period that is changed by agreement, the revised period shall remain in effect until it is changed. A new request is not necessary for each recurring period.

(2) Where the period specified for compliance is a standard calendar period, if the initial compliance date occurs after the beginning of the period, compliance shall be required according to the schedule specified in paragraph (j)(2)(i) or (ii) of this section, as appropriate.

(i) Compliance shall be required before the end of the standard calendar period within which the compliance deadline occurs, if there remain at least 3 days for tasks that must be performed weekly, at least 2 weeks for tasks that must be performed monthly, at least 1 month for tasks that must be performed each quarter, or at least 3 months for tasks that must be performed annually; or

(ii) In all other cases, compliance shall be required before the end of the first full standard calendar period within which the initial compliance deadline occurs.

(3) In all instances where a provision of this subpart MMM requires completion of a task during each of multiple successive periods, an owner or operator may perform the required task at any time during the specified period, provided the task is conducted at a reasonable interval after completion of the task in the previous period.

§ 63.1361 Definitions.

Terms used in this subpart are defined in the CAA, in subpart A of this part, or in this section. If the same term is defined in subpart A of this part and in this section, it shall have the meaning given in this section for the purposes of this subpart MMM.

Air pollution control device or control device means equipment installed on a process vent, storage vessel, wastewater treatment exhaust stack, or combination thereof that reduces the mass of HAP emitted to the air. The equipment may consist of an individual device or a series of devices. Examples include incinerators, carbon adsorption units, condensers, flares, boilers, process heaters, and gas absorbers. Process condensers are not considered air pollution control devices or control devices.

Bag dump means equipment into which bags or other containers containing a powdered, granular, or other solid feedstock material are emptied. A bag dump is part of the process.

Batch emission episode means a discrete venting episode that is associated with a single unit operation. A unit operation may have more than one batch emission episode. For example, a batch distillation unit operation may consist of batch emission episodes associated with charging and heating. Charging the vessel with HAP will result in one discrete batch emission episode that will last through the duration of the charge and will have an average flowrate equal to the rate of the charge. Another discrete batch emission episode will result from the expulsion of expanded vapor as the contents of the vessel are heated.

Batch operation means a noncontinuous operation involving intermittent or discontinuous feed into PAI or integral intermediate manufacturing equipment, and, in general, involves the emptying of the equipment after the batch operation ceases and prior to beginning a new operation. Addition of raw material and withdrawal of product do not occur simultaneously in a batch operation. A batch process consists of a series of batch operations.

Bench-scale batch process means a batch process (other than a research and development facility) that is capable of being located on a laboratory bench top. This bench-scale equipment will typically include reagent feed vessels, a small reactor and associated product separator, recovery and holding equipment. These processes are only capable of producing small quantities of product.

Block means a time period equal to, at a maximum, the duration of a single batch.

Car seal means a seal that is placed on a device that is used to change the position of a valve (e.g., from opened to closed) in such a way that the position of the valve cannot be changed without breaking the seal.

Cleaning operation means routine rinsing, washing, or boil-off of equipment in batch operations between batches.

Closed-loop system means an enclosed system that returns process fluid to the process and is not vented to the atmosphere except through a closed-vent system.

Closed-purge system means a system or combination of system and portable containers, to capture purged liquids. Containers must be covered or closed when not being filled or emptied.

Closed-vent system means a system that is not open to the atmosphere and is composed of piping, ductwork, connections, and, if necessary, flow inducing devices that transport gas or vapor from an emission point to a control device.

Combustion device means an individual unit of equipment, such as a flare, incinerator, process heater, or boiler, used for the combustion of organic HAP vapors.

Connector means flanged, screwed, or other joined fittings used to connect two pipe lines or a pipe line and a piece of equipment. A common connector is a flange. Joined fittings welded completely around the circumference of the interface are not considered connectors for the purpose of this regulation. For the purpose of reporting and record keeping, connector means joined fittings that are not inaccessible, ceramic, or ceramic-lined as described in § 63.1255(b)(1)(vii) and 63.1255(f)(3).

Construction means the onsite fabrication, erection, or installation of an affected source or PAI process unit. Addition of new equipment to an existing PAI process unit does not constitute construction.

Consumption means the makeup quantity of HAP entering a process that is not used as reactant. The quantity of material used as reactant is the theoretical amount needed assuming a 100 percent stoichiometric conversion. Makeup is the net amount of material that must be added to the process to replenish losses.

Container, as used in the wastewater provisions, means any portable waste management unit that has a capacity greater than or equal to 0.1 m^3 in which a material is stored, transported, treated, or otherwise handled. Examples of containers are drums, barrels, tank trucks, barges, dumpsters, tank cars, dump trucks, and ships.

Continuous process means a process where the inputs and outputs flow continuously throughout the duration of the process. Continuous processes typically approach steady state.

Continuous seal means a seal that forms a continuous closure that completely covers the space between the wall of the storage vessel and the edge of the floating roof. A continuous seal may be a vapor-mounted, liquid-mounted, or metallic shoe seal.

Controlled HAP emissions means the quantity of HAP components discharged to the atmosphere from an air pollution control device.

Cover, as used in the wastewater provisions, means a device or system which is placed on or over a waste management unit containing wastewater or residuals so that the entire surface area is enclosed to minimize air emissions. A cover may have openings necessary for operation, inspection, and maintenance of the waste management unit such as access hatches, sampling ports, and gauge wells provided that each opening is closed when not in use. Examples of covers include a fixed roof installed on a wastewater tank, a lid installed on a container, and an air-supported enclosure installed over a waste management unit.

Double block and bleed system means two block valves connected in series with a bleed valve or line that can vent the line between the two block valves.

Duct work means a conveyance system such as those commonly used for heating and ventilation systems. It is often made of sheet metal and often has sections connected by screws or crimping. Hard-piping is not ductwork.

Equipment, for purposes of § 63.1363, means each pump, compressor, agitator, pressure relief device, sampling connection system, open-ended valve or line, valve, connector, and instrumentation system in organic hazardous air pollutant service.

External floating roof means a pontoon-type or double-deck type cover that rests on the liquid surface in a storage tank or waste management unit with no fixed roof.

FIFRA means the Federal Insecticide, Fungicide, and Rodenticide Act.

Fill or filling means the introduction of organic HAP into a storage tank or the introduction of a wastewater stream or residual into a waste management unit, but not necessarily to complete capacity.

First attempt at repair means to take action for the purpose of stopping or

reducing leakage of organic material to the atmosphere.

Fixed roof means a cover that is mounted on a waste management unit or storage tank in a stationary manner and that does not move with fluctuations in liquid level.

Flame ionization detector (FID) means a device in which the measured change in conductivity of a standard flame (usually hydrogen) due to the insertion of another gas or vapor is used to detect the gas or vapor.

Floating roof means a cover consisting of a double deck, pontoon single deck, internal floating cover or covered floating roof, which rests upon and is supported by the liquid being contained, and is equipped with a continuous seal or seals to close the space between the roof edge and waste management unit or storage vessel wall.

Flow indicator means a device that indicates whether gas flow is, or whether the valve position would allow gas flow to be, present in a line.

Group 1 process vent means any process vent from a process at an existing or new affected source for which the uncontrolled organic HAP emissions from the sum of all process vents are greater than or equal to 0.15 Mg/yr and/or the uncontrolled hydogen chloride (HCl) and chlorine emissions from the sum of all process vents are greater than or equal to 6.8 Mg/yr.

Group 2 process vent means any process vent that does not meet the definition of a Group 1 process vent.

Group 1 storage vessel means a storage vessel at an existing affected source with a capacity equal to or greater than 75 m^3 and storing material with a maximum true vapor pressure greater than or equal to 3.45 kPa, or a storage vessel at a new affected source with a capacity equal to or greater than 40 m^3 and storing material with a maximum true vapor pressure greater than or equal to 16.5 kPa and with a capacity greater than or equal to 75 m^3 and storing material with a maximum true vapor pressure greater than or equal to 3.45 kPa.

Group 2 storage vessel means a storage vessel that does not meet the definition of a Group 1 storage vessel.

Group 1 wastewater stream means process wastewater at an existing or new source that meets the criteria for Group 1 status in § 63.132(c) of subpart G of this part for compounds in Table 9 of subpart G of this part or a maintenance wastewater stream that contains 5.3 Mg of HAP per discharge event.

Group 2 wastewater stream means any wastewater stream that does not meet the definition of a Group 1 wastewater stream.

Group of processes means all of the equipment associated with processes in a building, processing area, or facility-wide. A group of processes may consist of a single process.

Halogenated compounds means organic compounds that contain chlorine atoms.

Halogenated vent stream means a process, storage vessel, or waste management unit vent stream determined to have a concentration of halogenated compounds of greater than 20 ppmv, as determined through process knowledge, test results using Method 18 of 40 CFR part 60, appendix A, or test results using any other test method that has been validated according to the procedures in Method 301 of appendix A of this part.

Hard-piping means piping or tubing that is manufactured and properly installed using good engineering judgment and standards, such as ANSI B31–3.

Impurity means a substance that is produced coincidentally with the product(s), or is present in a raw material. An impurity does not serve a useful purpose in the production or use of the product(s) and is not isolated.

In gas/vapor service means that a piece of equipment in organic HAP service contains a gas or vapor at operating conditions.

In heavy liquid service means that a piece of equipment in organic HAP service is not in gas/vapor service or in light liquid service.

In light liquid service means that a piece of equipment in organic HAP service contains a liquid that meets the following conditions:

(1) The vapor pressure of one or more of the organic compounds is greater than 0.3 kPa at 20° C;

(2) The total concentration of the pure organic compounds constituents having a vapor pressure greater than 0.3 kPa at 20° C is equal to or greater than 20 percent by weight of the total process stream; and

(3) The fluid is a liquid at operating conditions.

Note: To definition of "In light liquid service: Vapor pressures may be determined by the methods described in 40 CFR 60.485(e)(1).

In liquid service means that a piece of equipment in organic HAP service is not in gas/vapor service.

In organic hazardous air pollutant or in organic HAP service means that a piece of equipment either contains or contacts a fluid (liquid or gas) that is at least 5 percent by weight of total organic HAP as determined according to the provisions of § 63.180(d) of subpart H of this part. The provisions of § 63.180(d) of subpart H of this part also specify how to determine that a piece of equipment is not in organic HAP service.

In vacuum service means that equipment is operating at an internal pressure which is at least 5 kPa below ambient pressure.

In-situ sampling systems means nonextractive samplers or in-line samplers.

Individual drain system means the stationary system used to convey wastewater streams or residuals to a waste management unit or to discharge or disposal. The term includes: hard piping; all process drains and junction boxes; and associated sewer lines, other junction boxes, manholes, sumps, and lift stations conveying wastewater streams or residuals. A segregated stormwater sewer system, which is a drain and collection system designed and operated for the sole purpose of collecting rainfall-runoff at a facility, and which is segregated from all other individual drain systems, is excluded from this definition.

Instrumentation system means a group of equipment components used to condition and convey a sample of the process fluid to analyzers and instruments for the purpose of determining process operating conditions (e.g., composition, pressure, flow, etc.). Valves and connectors are the predominant type of equipment used in instrumentation systems; however, other types of equipment may also be included in these systems. Only valves nominally 0.5 inches and smaller and connectors nominally 0.75 inches and smaller in diameter are considered instrumentation systems for the purposes of this subpart. Valves greater than nominally 0.5 inches and connectors greater than nominally 0.75 inches associated with instrumentation systems are not considered part of instrumentation systems and must be monitored individually.

Integral intermediate means an intermediate for which 50 percent or more of the annual production is used in on-site production of any PAI(s) and that is not stored before being used in the production of another integral intermediate or the PAI(s). For the purposes of this definition, an intermediate is stored if it is discharged to a storage vessel and at least one of the following conditions is met: the processing equipment that discharges to the storage vessel is shutdown before the processing equipment that withdraws from the storage vessel is

started up: during an annual period, the material must be stored in the vessel for at least 30 days before being used to make a PAI; or the processing equipment that discharges to the storage vessel is located in a separate building (or processing area) of the plant than the processing equipment that uses material from the storage vessel as a feedstock, and control equipment is not shared by the two processing areas. Any process unit that produces an intermediate and is subject to subpart F of this part is not an integral intermediate.

Intermediate means an organic compound that is produced by chemical reaction and that is further processed or modified in one or more additional chemical reaction steps to produce another intermediate or a PAI.

Internal floating roof means a cover that rests or floats on the liquid surface (but not necessarily in complete contact with it) inside a storage tank or waste management unit that has a permanently affixed roof.

Junction box means a manhole or access point to a wastewater sewer system line or a lift station.

Large control device means a control device that controls process vents, and the total HAP emissions into the control device from all sources are greater than or equal to 10 tons/yr.

Liquid-mounted seal means a foam- or liquid-filled seal mounted in contact with the liquid between the wall of the storage vessel or waste management unit and the floating roof. The seal is mounted continuously around the tank or unit.

Liquids dripping means any visible leakage from the seal including dripping, spraying, misting, clouding, and ice formation. Indications of liquid dripping include puddling or new stains that are indicative of an existing evaporated drip.

Maintenance wastewater means wastewater generated by the draining of process fluid from components in the PAI process unit into an individual drain system prior to or during maintenance activities. Maintenance wastewater can be generated through planned or unplanned shutdowns and during periods not associated with a shutdown. Examples of activities that can generate maintenance wastewaters include descaling of heat exchanger tubing bundles, cleaning of distillation column traps, draining of low legs and high point bleeds, draining of pumps into an individual drain system, and draining of portions of the PAI process unit for repair.

Malfunction means any sudden, infrequent, and not reasonably preventable failure of air pollution control equipment, emissions monitoring equipment, process equipment, or a process to operate in a normal or usual manner. Failures that are caused all or in part by poor maintenance or careless operation are not malfunctions.

Maximum true vapor pressure means the equilibrium partial pressure exerted by the total organic HAP in the stored or transferred liquid at the temperature equal to the highest calendar-month average of the liquid storage or transferred temperature for liquids stored or transferred above or below the ambient temperature or at the local maximum monthly average temperature as reported by the National Weather Service for liquids stored or transferred at the ambient temperature, as determined:

(1) In accordance with methods described in Chapter 19.2 of the American Petroleum Institute's Manual of Petroleum Measurement Standards, Evaporative Loss From Floating-Roof Tanks (incorporated by reference as specified in § 63.14 in subpart A of this part); or

(2) As obtained from standard reference texts; or

(3) As determined by the American Society for Testing and Materials Method D2879–97, Test Method for Vapor Pressure-Temperature Relationship and Initial Decomposition Temperature of Liquids by Isoteniscope (incorporated by reference as specified in § 63.14 of subpart A of this part); or

(4) Any other method approved by the Administrator.

Metallic shoe seal or mechanical shoe seal means metal sheets that are held vertically against the wall of the storage tank by springs, weighted levers, or other mechanisms and connected to the floating roof by braces or other means. A flexible coated fabric (envelope) spans the annular space between the metal sheet and the floating roof.

Nonrepairable means that it is technically infeasible to repair a piece of equipment from which a leak has been detected without a process shutdown.

Open-ended valve or line means any valve, except pressure relief valves, having one side of the valve seat in contact with process fluid and one side open to atmosphere, either directly or through open piping.

Operating scenario, for the purposes of reporting and recordkeeping, means a description of a PAI process unit, including: identification of each wastewater point of determination (POD) and process vent, their associated emissions episodes and durations, and their associated level of control and control devices, as applicable; calculations and engineering analyses required to demonstrate compliance; and a description of operating and/or testing conditions for any associated control device.

Organic compound, as used in the definitions of intermediate and PAI, means any compound that contains both carbon and hydrogen with or without other elements.

Organic HAP means those HAP listed in section 112(b) of the CAA that are measured according to the procedures of Method 18 or Method 25A, 40 CFR part 60, appendix A.

Pesticide active ingredient or PAI means any material that is an active ingredient within the meaning of FIFRA section 2(a); that is used to produce an insecticide, herbicide, or fungicide end use pesticide product; that consists of one or more organic compounds; and that must be labeled in accordance with 40 CFR part 156 for transfer, sale, or distribution. These materials are typically described by North American Industrial Classification System (NAICS) Codes 325199 and 32532 (i.e., previously known as Standard Industrial Classification System Codes 2869 and 2879). These materials are identified by product classification codes 01, 21, 02, 04, 44, 07, 08, and 16 in block 19 on EPA form 3540–16, the Pesticides Report for Pesticide-Producing Establishments.

Pesticide active ingredient manufacturing process unit (PAI process unit) means a process unit that is used to produce a material that is primarily used as a PAI or integral intermediate. A PAI process unit consists of: the process, as defined in this subpart; associated storage vessels, as determined by the procedures in § 63.1360(f); equipment identified in § 63.1362(l); connected piping and ducts; and components such as pumps, compressors, agitators, pressure relief devices, sampling connection systems, open-ended valves or lines, valves, connectors, and instrumentation systems. A material is primarily used as a PAI or integral intermediate if more than 50 percent of the projected annual production from a process unit in the 3 years after June 23, 1999 or startup, whichever is later, is used as a PAI or integral intermediate; recordkeeping is required if the material is used as a PAI or integral intermediate, but not as the primary use. If the primary use changes to a PAI or integral intermediate, the process unit becomes a PAI process unit unless it is already subject to the HON. If the primary use changes from a PAI or integral intermediate to another use, the process unit remains a PAI process unit. Any process tank containing an

integral intermediate is part of the PAI process unit used to produce the integral intermediate. A process unit that produces an intermediate that is not an integral intermediate may be designated as a PAI process unit according to the procedures of § 63.1360(g). Formulation of pesticide products is not considered part of a PAI process unit. Quality assurance and quality control laboratories are not considered part of a PAI process unit.

Plant site means all contiguous or adjoining property that is under common control, including properties that are separated only by a road or other public right-of-way. Common control includes properties that are owned, leased, or operated by the same entity, parent entity, subsidiary, or any combination thereof.

Point of determination (POD) means each point where a wastewater stream exits the PAI process unit.

Note to definition of "point of determination": The regulation allows determination of the characteristics of a wastewater stream: at the point of determination; or downstream of the point of determination if corrections are made for changes in flow rate and annual average concentration of Table 9 compounds as determined in § 63.144 of subpart G of this part. Such changes include: losses by air emissions, reduction of annual average concentration or changes in flow rate by mixing with other water or wastewater streams, and reduction in flow rate or annual average concentration by treating or otherwise handling the wastewater stream to remove or destroy HAP.

Pressure release means the emission of materials resulting from the system pressure being greater than the set pressure of the pressure relief device. This release can be one release or a series of releases over a short time period due to a malfunction in the process.

Pressure relief device or valve means a safety device used to prevent operating pressures from exceeding the maximum allowable working pressure of the process equipment. A common pressure relief device is a spring-loaded pressure relief valve. Devices that are actuated either by a pressure of less than or equal to 2.5 pounds per square inch gauge or by a vacuum are not pressure relief devices.

Process means a logical grouping of processing equipment which collectively function to produce a product. For the purpose of this subpart, a PAI process includes all, or a combination of, reaction, recovery, separation, purification, treatment, cleaning, and other activities or unit operations, which are used to produce a PAI or integral intermediate. A PAI process and all integral intermediate processes for which 100 percent of the annual production is used in the production of the PAI may be linked together and defined as a single PAI process unit.

Process condenser means a condenser whose primary purpose is to recover material as an integral part of a unit operation. The condenser must cause a vapor-to-liquid phase change for periods during which the temperature of liquid in the process equipment is at or above its boiling or bubble point. Examples of process condensers include distillation condensers, reflux condensers, and condensers used in stripping or flashing operation. In a series of condensers, all condensers up to and including the first condenser with an exit gas temperature below the boiling or bubble point of the liquid in the process equipment are considered to be process condensers. All condensers in line prior to the vacuum source are included in this definition.

Process shutdown means a work practice or operational procedure that stops production from a process or part of a process during which it is technically feasible to clear process material from a process or part of a process consistent with safety constraints and during which repairs can be effected. An unscheduled work practice or operational procedure that stops production from a process or part of a process for less than 24 hours is not a process shutdown. An unscheduled work practice or operational procedure that would stop production from a process or part of a process for a shorter period of time than would be required to clear the process or part of the process of materials and start up the process, and would result in greater emissions than delay of repair of leaking components until the next scheduled process shutdown, is not a process shutdown. The use of spare equipment and technically feasible bypassing of equipment without stopping production are not process shutdowns.

Process tank means a tank that is used to collect material discharged from a feedstock storage vessel or equipment within the process and transfer of this material to other equipment within the process or a product storage vessel. Processing steps occur both upstream and downstream of the tank within a given process unit. Surge control vessels and bottoms receivers that fit these conditions are considered process tanks.

Process unit means the equipment assembled and connected by pipes or ducts to process raw materials and to manufacture an intended product.

Process unit group means a group of process units that manufacture PAI's and products other than PAI's by alternating raw materials or operating conditions, or by reconfiguring process equipment. Only process equipment that has been or could be part of a PAI process unit, because of its function or capacity, is included in a process unit group.

Process vent means a point of emission from processing equipment to the atmosphere or a control device. The vent may be the release point for an emission stream associated with an individual unit operation, or it may be the release point for emission streams from multiple unit operations that have been manifolded together into a common header. Examples of process vents include, but are not limited to, vents on condensers used for product recovery, bottom receivers, surge control vessels, reactors, filters, centrifuges, process tanks, and product dryers. A vent is not considered to be a process vent for a given emission episode if the undiluted and uncontrolled emission stream that is released through the vent contains less than 20 ppmv HAP, as determined through process knowledge that no HAP are present in the emission stream; using an engineering assessment as discussed in § 63.1365(b)(2)(ii); from test data collected using Method 1818 of 40 CFR part 60, appendix A; or from test data collected using any other test method that has been validated according to the procedures in Method 301 of appendix A of this part. Process vents do not include vents on storage vessels regulated under § 63.1362(c), vents on wastewater emission sources regulated under § 63.1362(d), or pieces of equipment regulated under § 63.1363.

Process wastewater means wastewater which, during manufacturing or processing, comes into direct contact with, or results from, the production or use of any raw material, intermediate product, finished product, by-product, or waste product. Examples include: product tank drawdown or feed tank drawdown; water formed during a chemical reaction or used as a reactant; water used to wash impurities from organic products or reactants; water used to clean process equipment; water used to cool or quench organic vapor streams through direct contact; and condensed steam from jet ejector systems pulling vacuum on vessels containing organics.

Product means the compound(s) or chemical(s) that are produced or manufactured as the intended output of a process unit. Impurities and wastes are not considered products.

Product dryer means equipment that is used to remove moisture or other liquid from granular, powdered, or other solid PAI or integral intermediate products prior to storage, formulation, shipment, or other uses. The product dryer is part of the process.

Product dryer vent means a process vent from a product dryer through which a gas stream containing gaseous pollutants (i.e., organic HAP, HCl, or chlorine), particulate matter, or both are released to the atmosphere or are routed to a control device.

Production-indexed HAP consumption factor (HAP factor) is the result of dividing the annual consumption of total HAP by the annual production rate, per process.

Production-indexed VOC consumption factor (VOC factor) is the result of dividing the annual consumption of total VOC by the annual production rate, per process.

Publicly owned treatment works (POTW) is defined at 40 CFR part 403.3(0).

Reactor means a device or vessel in which one or more chemicals or reactants, other than air, are combined or decomposed in such a way that their molecular structures are altered and one or more new organic compounds are formed.

Recovery device, as used in the wastewater provisions, means an individual unit of equipment capable of, and normally used for the purpose of, recovering chemicals for fuel value (i.e., net positive heating value), use, reuse, or for sale for fuel value, use, or reuse. Examples of equipment that may be recovery devices include organic removal devices such as decanters, strippers, or thin-film evaporation units. To be a recovery device, a decanter and any other equipment based on the operating principle of gravity separation must receive only two-phase liquid streams.

Repaired means that equipment is adjusted, or otherwise altered, to eliminate a leak as defined in the applicable paragraphs of § 63.1363.

Research and development facility means any stationary source whose primary purpose is to conduct research and development, where the operations are under the close supervision of technically trained personnel, and is not engaged in the manufacture of products for commercial sale, except in a de minimis manner.

Residual means any liquid or solid material containing Table 9 compounds (as defined in § 63.111 of subpart G of this part) that is removed from a wastewater stream by a waste management unit or treatment process that does not destroy organics (nondestructive unit). Examples of residuals from nondestructive wastewater management units include the organic layer and bottom residue removed by a decanter or organic-water separator and the overheads from a steam stripper or air stripper. Examples of materials which are not residuals include: silt; mud; leaves; bottoms from a steam stripper or air stripper; and sludges, ash, or other materials removed from wastewater being treated by destructive devices such as biological treatment units and incinerators.

Safety device means a closure device such as a pressure relief valve, frangible disc, fusible plug, or any other type of device which functions exclusively to prevent physical damage or permanent deformation to a unit or its air emission control equipment by venting gases or vapors directly to the atmosphere during unsafe conditions resulting from an unplanned, accidental, or emergency event. For the purposes of this subpart, a safety device is not used for routine venting of gases or vapors from the vapor headspace underneath a cover such as during filling of the unit or to adjust the pressure in this vapor headspace in response to normal daily diurnal ambient temperature fluctuations. A safety device is designed to remain in a closed position during normal operations and open only when the internal pressure, or another relevant parameter, exceeds the device threshold setting applicable to the air emission control equipment as determined by the owner or operator based on manufacturer recommendations, applicable regulations, fire protection and prevention codes, standard engineering codes and practices, or other requirements for the safe handling of flammable, combustible, explosive, reactive, or hazardous materials.

Sampling connection system means an assembly of equipment within a process unit used during periods of representative operation to take samples of the process fluid. Equipment used to take nonroutine grab samples is not considered a sampling connection system.

Sensor means a device that measures a physical quantity or the change in a physical quantity, such as temperature, pressure, flow rate, pH, or liquid level.

Set pressure means the pressure at which a properly operating pressure relief device begins to open to relieve atypical process system operating pressure.

Sewer line means a lateral, trunk line, branch line, or other conduit including, but not limited to, grates, trenches, etc., used to convey wastewater streams or residuals to a downstream waste management unit.

Shutdown means the cessation of operation of a continuous PAI process unit for any purpose. Shutdown also means the cessation of a batch PAI process unit or any related individual piece of equipment required or used to comply with this part or for emptying and degassing storage vessels for periodic maintenance, replacement of equipment, repair, or any other purpose not excluded from this definition. Shutdown does not apply to cessation of a batch PAI process unit at the end of a campaign or between batches (e.g., for rinsing or washing equipment), for routine maintenance, or for other routine operations.

Small control device means a control device that controls process vents, and the total HAP emissions into the control device from all sources are less than 10 tons of HAP per year.

Startup means the setting in operation of a continuous PAI process unit for any purpose, the first time a new or reconstructed batch PAI process unit begins production, or, for new equipment added, including equipment used to comply with this subpart, the first time the equipment is put into operation. For batch process units, startup does not apply to the first time the equipment is put into operation at the start of a campaign to produce a product that has been produced in the past, after a shutdown for maintenance, or when the equipment is put into operation as part of a batch within a campaign. As used in § 63.1363, startup means the setting in operation of a piece of equipment or a control device that is subject to this subpart.

Storage vessel means a tank or other vessel that is used to store organic liquids that contain one or more HAP and that has been assigned, according to the procedures in § 63.1360(f) or (g), to a PAI process unit that is subject to this subpart MMM. The following are not considered storage vessels for the purposes of this subpart:

(1) Vessels permanently attached to motor vehicles such as trucks, railcars, barges, or ships;

(2) Pressure vessels designed to operate in excess of 204.9 kilopascals and without emissions to the atmosphere;

(3) Vessels storing material that contains no organic HAP or contains organic HAP only as impurities;

(4) Wastewater storage tanks;

(5) Process tanks; and

(6) Nonwastewater waste tanks.

Supplemental gases means any nonaffected gaseous streams (streams

that are not from process vents, storage vessels, equipment or waste management units) that contain less than 20 ppmv TOC and less than 20 ppmv total HCl and chlorine, as determined through process knowledge, and are combined with an affected vent stream. Supplemental gases are often used to maintain pressures in manifolds or for fire and explosion protection and prevention. Air required to operate combustion device burner(s) is not considered a supplemental gas.

Surface impoundment means a waste management unit which is a natural topographic depression, manmade excavation, or diked area formed primarily of earthen materials (although it may be lined with manmade materials), which is designed to hold an accumulation of liquid wastes or waste containing free liquids. A surface impoundment is used for the purpose of treating, storing, or disposing of wastewater or residuals, and is not an injection well. Examples of surface impoundments are equalization, settling, and aeration pits, ponds, and lagoons.

Total organic compounds (TOC) means those compounds measured according to the procedures of Method 18 or Method 25A, 40 CFR part 60, appendix A.

Treatment process means a specific technique that removes or destroys the organics in a wastewater or residual stream such as a steam stripping unit, thin-film evaporation unit, waste incinerator, biological treatment unit, or any other process applied to wastewater streams or residuals to comply with § 63.138 of subpart G of this part. Most treatment processes are conducted in tanks. Treatment processes are a subset of waste management units.

Uncontrolled HAP emissions means a gas stream containing HAP which has exited the process (or process condenser, if any), but which has not yet been introduced into an air pollution control device to reduce the mass of HAP in the stream. If the process vent is not routed to an air pollution control device, uncontrolled emissions are those HAP emissions released to the atmosphere.

Unit operation means those processing steps that occur within distinct equipment that are used, among other things, to prepare reactants, facilitate reactions, separate and purify products, and recycle materials. Equipment used for these purposes includes, but is not limited to, reactors, distillation units, extraction columns, absorbers, decanters, dryers, condensers, and filtration equipment.

Vapor-mounted seal means a continuous seal that completely covers the annular space between the wall of the storage tank or waste management unit and the edge of the floating roof, and is mounted such that there is a vapor space between the stored liquid and the bottom of the seal.

Volatile organic compounds are defined in 40 CFR 51.100.

Waste management unit means the equipment, structure(s), and/or device(s) used to convey, store, treat, or dispose of wastewater streams or residuals. Examples of waste management units include wastewater tanks, surface impoundments, individual drain systems, and biological wastewater treatment units. Examples of equipment that may be waste management units include containers, air flotation units, oil-water separators or organic-water separators, or organic removal devices such as decanters, strippers, or thin-film evaporation units. If such equipment is a recovery device, then it is part of a PAI process unit and is not a waste management unit.

Wastewater means water that meets either of the conditions described in paragraph (1) or (2) of this definition and is discarded from a PAI process unit that is at an affected source:

(1) Is generated from a PAI process and contains either:

(i) An annual average concentration of compounds in Table 9 of subpart G of this part of at least 5 ppmw and has an average flow rate of 0.02 L/min or greater; or

(ii) An annual average concentration of compounds in Table 9 of subpart G of this part of at least 10,000 ppmw at any flow rate;

(2) Is generated from a PAI process unit as a result of maintenance activities and contains at least 5.3 Mg of HAP per individual discharge event.

Wastewater tank means a stationary waste management unit that is designed to contain an accumulation of wastewater or residuals and is constructed primarily of nonearthen materials (e.g., wood, concrete, steel, plastic) which provide structural support. Wastewater tanks used for flow equalization are included in this definition.

Water seal controls means a seal pot, p-leg trap, or other type of trap filled with water (e.g., flooded sewers that maintain water levels adequate to prevent air flow through the system) that creates a water barrier between the sewer line and the atmosphere. The water level of the seal must be maintained in the vertical leg of a drain in order to be considered a water seal.

§ 63.1362 Standards.

(a) On and after the compliance dates specified in § 63.1364, each owner or operator of an affected source subject to the provisions of this subpart shall control HAP emissions to the levels specified in this section and in § 63.1363, as summarized in Table 2 of this subpart.

(b) *Process vents.* (1) The owner or operator of an existing source shall comply with the requirements of paragraphs (b)(2) and (3) of this section. The owner or operator of a new source shall comply with the requirements of paragraphs (b)(4) and (5) of this section. Compliance with paragraphs (b)(2) through (b)(5) of this section shall be demonstrated through the applicable test methods and initial compliance procedures in § 63.1365 and the monitoring requirements in § 63.1366.

(2) *Organic HAP emissions from existing sources.* The owner or operator of an existing affected source must comply with the requirements in either paragraph (b)(2)(i) of this section or with the requirements in paragraphs (b)(2)(ii) through (iv) of this section.

(i) The uncontrolled organic HAP emission rate shall not exceed 0.15 Mg/yr from the sum of all process vents within a process.

(ii) (A) Except as provided in paragraph (b)(2)(ii)(B) of this section, uncontrolled organic HAP emissions from a process vent shall be reduced by 98 percent by weight or greater if the flow-weighted average flowrate for the vent as calculated using Equation 1 of this subpart is less than or equal to the flowrate calculated using Equation 2 of this subpart.

$$FR_a = \frac{\sum_{i=1}^{n}(D_i)(FR_i)}{\sum_{i=1}^{n} D_i} \qquad \text{(Eq. 1)}$$

$$FR = 0.02 * (HL) - 1{,}000 \qquad \text{(Eq. 2)}$$

Where:

FR_a=flow-weighted average flowrate for the vent, scfm

D_i=duration of each emission event, min

FR_i=flowrate of each emission event, scfm

n=number of emission events

FR=flowrate, scfm

HL=annual uncontrolled organic HAP emissions, lb/yr, as defined in § 63.1361

(B) If the owner or operator can demonstrate that a control device, installed on or before November 10, 1997 on a process vent otherwise

subject to the requirements of paragraph (b)(2)(ii)(A) of this section, reduces inlet emissions of total organic HAP by greater than or equal to 90 percent by weight but less than 98 percent by weight, then the control device must be operated to reduce inlet emissions of total organic HAP by 90 percent by weight or greater.

(iii) Excluding process vents that are subject to the requirements in paragraph (b)(2)(ii) of this section, uncontrolled organic HAP emissions from the sum of all process vents within a process shall be reduced by 90 percent or greater by weight.

(iv) As an alternative to the requirements in paragraphs (b)(2)(ii) and (iii) of this section, uncontrolled organic HAP emissions from any process vent may be reduced in accordance with any of the provisions in paragraphs (b)(2)(iv)(A) through (D) of this section. All remaining process vents within a process must be controlled in accordance with paragraphs (b)(2)(ii) and (iii) of this section.

(A) To outlet concentrations less than or equal to 20 ppmv as TOC; or

(B) By a flare that meets the requirements of § 63.11(b); or

(C) By a control device specified in § 63.1365(a)(4); or

(D) In accordance with the alternative standard specified in paragraph (b)(6) of this section.

(3) *HCl and Cl_2 emissions from existing sources.* For each process, the owner or operator of an existing source shall comply with the requirements of either paragraph (b)(3)(i) or (ii) of this section.

(i) The uncontrolled HCl and Cl_2 emissions, including HCl generated from the combustion of halogenated process vent emissions, from the sum of all process vents within a process shall not exceed 6.8 Mg/yr.

(ii) HCl and Cl_2 emissions, including HCl generated from combustion of halogenated process vent emissions, from the sum of all process vents within a process shall be reduced by 94 percent or greater or to outlet concentrations less than or equal to 20 ppmv.

(4) *Organic HAP emissions from new sources.* For each process, the owner or operator of a new source shall comply with the requirements of either paragraph (b)(4)(i) or (ii) of this section.

(i) The uncontrolled organic HAP emissions shall not exceed 0.15 Mg/yr from the sum of all process vents within a process.

(ii) The uncontrolled organic HAP emissions from the sum of all process vents within a process at a new affected source that are not controlled according to any of the requirements of paragraphs (b)(4)(ii)(A) through (C) or (b)(6) of this section shall be reduced by 98 weight percent or greater.

(A) To outlet concentrations less than or equal to 20 ppmv as TOC; or

(B) By a flare that meets the requirements of § 63.11(b); or

(C) By a control device specified in § 63.1365(a)(4).

(5) *HCl and Cl_2 emissions from new sources.* For each process, the owner or operator of a new source shall comply with the requirements of either paragraph (b)(5)(i), (ii), or (iii) of this section.

(i) The uncontrolled HCl and Cl_2 emissions, including HCl generated from combustion of halogenated process vent emissions, from the sum of all process vents within a process shall not exceed 6.8 Mg/yr.

(ii) If HCl and Cl_2 emissions, including HCl generated from combustion of halogenated process vent emissions, from the sum of all process vents within a process are greater than or equal to 6.8 Mg/yr and less than 191 Mg/yr, these HCl and Cl_2 emissions shall be reduced by 94 percent or to an outlet concentration less than or equal to 20 ppmv.

(iii) If HCl and Cl_2 emissions, including HCl generated from combustion of halogenated process vent emissions, from the sum of all process vents within a process are greater than 191 Mg/yr, these HCl and Cl_2 emissions shall be reduced by 99 percent or greater or to an outlet concentration less than or equal to 20 ppmv.

(6) *Alternative standard.* As an alternative to the provisions in paragraphs (b) (2) through (5) of this section, the owner or operator may route emissions from a process vent to a control device or series of control devices achieving an outlet TOC concentration, as calibrated on methane or the predominant HAP, of 20 ppmv or less, and an outlet concentration of HCl and Cl_2 of 20 ppmv or less. Any process vents within a process that are not routed to such a control device or series of control devices must be controlled in accordance with the provisions of paragraphs (b)(2)(ii), (b)(2)(iii), (b)(2)(iv), (b)(3)(ii), (b)(3)(iii), (b)(4)(ii), (b)(5)(ii), or (b)(5)(iii) of this section, as applicable.

(c) *Storage vessels.* (1) The owner or operator shall either determine the group status of a storage vessel or designate it as a Group 1 storage vessel. If the owner or operator elects to designate the storage vessel as a Group 1 storage vessel, the owner or operator is not required to determine the maximum true vapor pressure of the material stored in the storage vessel.

(2) *Standard for existing sources.* Except as specified in paragraphs (c) (4) and (5) of this section, the owner or operator of a Group 1 storage vessel at an existing affected source, as defined in § 63.1361, shall equip the affected storage vessel with one of the following:

(i) A fixed roof and internal floating roof, or

(ii) An external floating roof, or

(iii) An external floating roof converted to an internal floating roof, or

(iv) A closed vent system meeting the conditions of paragraph (k) of this section and a control device that meets any of the following conditions:

(A) Reduces organic HAP emissions by 95 percent by weight or greater; or

(B) Reduces organic HAP emissions to outlet concentrations of 20 ppmv or less as TOC; or

(C) Is a flare that meets the requirements of § 63.11(b); or

(D) Is a control device specified in § 63.1365(a)(4).

(3) *Standard for new sources.* Except as specified in paragraphs (c)(4) and (5) of this section, the owner or operator of a Group 1 storage vessel at a new source, as defined in § 63.1361, shall equip the affected storage vessel in accordance with any one of paragraphs (c)(2)(i) through (iv) of this section.

(4) *Alternative standard.* As an alternative to the provisions in paragraphs (c)(2) and (3) of this section, the owner or operator of an existing or new affected source may route emissions from storage vessels to a control device or series of control devices achieving an outlet TOC concentration, as calibrated on methane or the predominant HAP, of 20 ppmv or less, and an outlet concentration of hydrogen chloride and chlorine of 20 ppmv or less.

(5) *Planned routine maintenance.* The owner or operator is exempt from the specifications in paragraphs (c)(2) through (4) of this section during periods of planned routine maintenance of the control device that do not exceed 240 hr/yr.

(6) Compliance with the provisions of paragraphs (c)(2) and (3) of this section is demonstrated using the initial compliance procedures in § 63.1365(d) and the monitoring requirements in § 63.1366. Compliance with the outlet concentrations in paragraph (c)(4) of this section shall be determined by the initial compliance provisions in § 63.1365(a)(5) and the continuous emission monitoring requirements of § 63.1366(b)(5).

(d) *Wastewater.* The owner or operator of each affected source shall comply with the requirements of §§ 63.131 through 63.147 of subpart G of

this part, with the differences noted in paragraphs (d)(1) through (13) of this section for the purposes of this subpart.

(1) When the determination of equivalence criteria in § 63.102(b) is referred to in §§ 63.132, 63.133, and 63.137 of subpart G of this part, the provisions in § 63.6(g) of subpart A of this part shall apply.

(2) When the storage tank requirements contained in §§ 63.119 through 63.123 of subpart G of this part are referred to in §§ 63.132 through 63.148 of subpart G of this part, §§ 63.119 through 63.123 of subpart G of this part are applicable, with the exception of the differences noted in paragraphs (d)(2)(i) through (v) of this section.

(i) When the term "storage vessel" is used in §§ 63.119 through 63.123 of subpart G of this part, the definition of the term "storage vessel" in § 63.1361 shall apply for the purposes of this subpart.

(ii) When December 31, 1992, is referred to in § 63.119 of subpart G of this part, November 10, 1997 shall apply for the purposes of this subpart.

(iii) When April 22, 1994 is referred to in § 63.119 of subpart G of this part, June 23, 1999 shall apply for the purposes of this subpart.

(iv) When the phrase "the compliance date specified in § 63.100 of subpart F of this part" is referred to in § 63.120 of subpart G of this part, the phrase "the compliance date specified in § 63.1364" shall apply for the purposes of this subpart.

(v) When the phrase "the maximum true vapor pressure of the total organic HAP in the stored liquid falls below the values defining Group 1 storage vessels specified in Table 5 or Table 6 of this subpart" is referred to in § 63.120(b)(1)(iv) of subpart G of this part, the phrase, "the maximum true vapor pressure of the total organic HAP in the stored liquid falls below the values defining Group 1 storage vessels specified in § 63.1361" shall apply for the purposes of this subpart.

(3) To request approval to monitor alternative parameters, as referred to in § 63.146(a) of subpart G of this part, the owner or operator shall comply with the procedures in § 63.8(f) of subpart A of this part, as referred to in § 63.1366(b)(4), instead of the procedures in § 63.151(f) or (g) of subpart G of this part.

(4) When the Notification of Compliance Status report requirements contained in § 63.152(b) of subpart G of this part are referred to in § 63.146 of subpart G of this part, the Notification of Compliance Status report requirements in § 63.1368(f) shall apply for the purposes of this subpart.

(5) When the recordkeeping requirements contained in § 63.152(f) of subpart G of this part are referred to in § 63.147(d) of subpart G of this part, the recordkeeping requirements in § 63.1367 shall apply for the purposes of this subpart.

(6) When the Periodic report requirements contained in § 63.152(c) of subpart G of this part are referred to in §§ 63.146 and 63.147 of subpart G of this part, the Periodic report requirements contained in § 63.1368(g) shall apply for the purposes of this subpart.

(7) When the term "process wastewater" is referred to in §§ 63.132 through 63.147 of subpart G of this part, the term "wastewater" as defined in § 63.1361 shall apply for the purposes of this subpart.

(8) When the term "Group 1 wastewater stream" is used in §§ 63.132 through 63.147 of subpart G of this part, the definition of the term "Group 1 wastewater stream" in § 63.1361 shall apply for both new sources and existing sources for the purposes of this subpart.

(9) The requirements in §§ 63.132 through 63.147 for compounds listed on Table 8 of subpart G of this part shall not apply for the purposes of this subpart.

(10) When the total load of Table 9 compounds in the sum of all process wastewater from PAI process units at a new affected source is 2,100 Mg/yr (2,300 tons/yr) or more, the owner or operator shall reduce, by removal or destruction, the mass flow rate of all compounds in Table 9 of subpart G of this part in all wastewater (process and maintenance wastewater) by 99 percent or more. Alternatively, the owner or operator may treat the wastewater in a unit identified in and complying with § 63.138(h) of subpart G of this part. The removal/destruction efficiency shall be determined by the procedures specified in § 63.145(c) of subpart G of this part, for noncombustion processes, or § 63.145(d) of subpart G of this part, for combustion processes.

(11) The compliance date for the affected source subject to the provisions of this section is specified in § 63.1364.

(12) The option in § 63.139 of subpart G of this part to reduce emissions from a control device to an outlet HAP concentration of 20 ppmv shall not apply for the purposes of this subpart.

(13) The requirement to correct outlet concentrations from combustion devices to 3 percent oxygen in § 63.139(c)(1)(ii) of subpart H of this part shall apply only if supplemental gases are combined with affected vent streams. If emissions are controlled with a vapor recovery system as specified in § 63.139(c)(2) of subpart H of this part, the owner or operator must correct for supplemental gases as specified in § 63.1365(a)(7)(ii).

(14) If wastewater is sent offsite for biological treatment, the waste management units up to the activated sludge unit must be covered, or the owner or operator must demonstrate that less than 5 percent of the total HAP on list 1 in § 63.145(h) of subpart H of this part is emitted from these units.

(e) *Bag dumps and product dryers.* (1) The owner or operator shall reduce particulate matter emissions to a concentration not to exceed 0.01 gr/dscf from product dryers that dry a PAI or integral intermediate that is a HAP.

(2) The owner or operator shall reduce particulate matter emissions to a concentration not to exceed 0.01 gr/dscf from bag dumps that introduce to a PAI process unit a feedstock that is a solid material and a HAP, excluding bag dumps where the feedstock contains HAP only as impurities.

(3) Gaseous HAP emissions from product dryers and bag dumps shall be controlled in accordance with the provisions for process vent emissions in paragraph (b) of this section.

(f) *Heat exchange systems.* Unless one or more of the conditions specified in § 63.104(a)(1) through (6) of subpart F of this part are met, an owner or operator shall monitor each heat exchange system that is used to cool process equipment in PAI process units that are part of an affected source as defined in § 63.1360(a) according to the provisions in either § 63.104(b) or (c) of subpart F of this part. When the term "chemical manufacturing process unit" is used in § 63.104(c) of subpart F of this part, the term "PAI process unit" shall apply for the purposes of this subpart. Whenever a leak is detected, the owner or operator shall comply with the requirements in § 63.104(d) of subpart F of this part. Delay of repair of heat exchange systems for which leaks have been detected is allowed in accordance with the provisions of § 63.104(e) of subpart F of this part.

(g) *Pollution prevention alternative.* Except as provided in paragraph (g)(1) of this section, for a process that has an initial startup before November 10, 1997, an owner or operator may choose to meet the pollution prevention alternative requirement specified in either paragraph (g)(2) or (3) of this section for any PAI process unit, in lieu of the requirements specified in paragraphs (b), (c), (d), and (e) of this section and in § 63.1363. Compliance with the requirements of paragraphs (g)(2) and (3) of this section shall be

demonstrated through the procedures in §§ 63.1365(g) and 63.1366(f).

(1) A HAP must be controlled according to the requirements of paragraphs (b), (c), (d), and (e) of this section and § 63.1363 if it is generated in the PAI process unit or an associated control device and it is not part of the production-indexed HAP consumption factor (HAP factor).

(2) The HAP factor shall be reduced by at least 85 percent from a 3-year average baseline beginning no earlier than the 1987 through 1989 calendar years. Alternatively, for a process that has been operating for less than 3 years but more than 1 year, the baseline factor may be calculated for the time period from startup of the process until the present. For any reduction in the HAP factor achieved by reducing a HAP that is also a VOC, an equivalent reduction in the production-indexed VOC consumption factor (VOC factor) is also required (the equivalence is determined on a mass basis, not a percentage basis). For any reduction in the HAP factor that is achieved by reducing a HAP that is not a VOC, the VOC factor may not be increased.

(3) As an alternative to the provisions in paragraph (g)(2) of this section, the owner or operator may combine pollution prevention with emissions control as specified in paragraphs (g)(3)(i) and (ii) of this section.

(i) The HAP factor shall be reduced as specified in paragraph (g)(2) of this section except that a reduction of at least 50 percent shall apply for the purposes of this paragraph.

(ii) The total annual HAP emissions from the PAI process unit shall be reduced by an amount that, when divided by the annual production rate and added to the reduction of the HAP factor yields a value of at least 85 percent of the baseline HAP factor. The total annual VOC emissions from the process unit must be reduced by an amount equivalent to the reduction in HAP emissions for each HAP that is a VOC (the equivalence is determined on a mass basis). For HAP emissions reductions that are achieved by reducing a HAP that is not a VOC, the total annual VOC emissions may not be increased. The reduction in HAP air emissions must be achieved using one of the following control devices:

(A) Combustion control devices such as incinerators, flares, or process heaters.

(B) Control devices such as condensers and carbon adsorbers whose recovered product is destroyed or shipped offsite for destruction.

(C) Any control device that does not ultimately allow for recycling of material back to the PAI process unit.

(D) Any control device for which the owner or operator can demonstrate that the use of the device in controlling HAP emissions will have no effect on the HAP factor for the PAI process unit.

(h) *Emissions averaging provisions.* Except as provided in paragraphs (h)(1) through (7) of this section, the owner or operator of an existing affected facility may choose to comply with the emission standards in paragraphs (b), (c), and (d) of this section by using emissions averaging procedures specified in § 63.1365(h) for organic HAP emissions from any storage vessel, process, or waste management unit that is part of an affected source subject to this subpart.

(1) A State may restrict the owner or operator of an existing source to use only the procedures in paragraphs (b), (c), and (d) of this section to comply with the emission standards where State authorities prohibit averaging of HAP emissions.

(2) Emission points that are controlled as specified in paragraphs (h)(2)(i) through (iii) may not be used to calculate emissions averaging credits, unless a nominal efficiency has been assigned according to the procedures in § 63.150(i) of subpart G of this part. The nominal efficiency must exceed the percent reduction required by paragraphs (b) and (c) of this section for process vents and storage vessels, respectively, and exceed the percent reduction required in § 63.138(e) or (f) of subpart G of this part for wastewater streams.

(i) Group 1 storage vessels controlled with an internal floating roof meeting the specifications of § 63.119(b) of subpart G of this part, an external floating roof meeting the specifications of § 63.119(c) of subpart G of this part, or an external floating roof converted to an internal floating meeting the specifications of § 63.119(d) of subpart G of this part.

(ii) Emission points controlled with a flare.

(iii) Wastewater controlled as specified in paragraphs (h)(2)(iii)(A) or (B) of this section.

(A) With controls specified in § 63.133 through § 63.137 of subpart G of this part;

(B) With a steam stripper meeting the specifications of § 63.138(d) of subpart G of this part.

(3) Process vents and storage vessels controlled with a control device to an outlet concentration of 20 ppmv and wastewater streams controlled in a treatment unit to an outlet concentration of 50 ppmw may not be used in any averaging group.

(4) Maintenance wastewater streams and wastewater streams treated in biological treatment units may not be included in any averaging group.

(5) Processes which have been permanently shut down and storage vessels permanently taken out of HAP service may not be included in any averaging group.

(6) Emission points already controlled on or before November 15, 1990 may not be used to generate emissions averaging credits, unless the level of control has been increased after November 15, 1990. In these cases, credit will be allowed only for the increase in control after November 15, 1990.

(7) Emission points controlled to comply with a State or Federal rule other than this subpart may not be included in an emissions averaging group, unless the level of control has been increased after November 15, 1990, above what is required by the other State or Federal rule. Only the control above what is required by the other State or Federal rule will be credited. However, if an emission point has been used to generate emissions averaging credit in an approved emissions average, and the point is subsequently made subject to a State or Federal rule other than this subpart, the point can continue to generate emissions averaging credit for the purpose of complying with the previously approved average.

(i) *Opening of a safety device.* Opening of a safety device, as defined in § 63.1361, is allowed at any time conditions require it to avoid unsafe conditions.

(j) *Closed-vent systems.* The owner or operator of a closed-vent system that contains bypass lines that could divert a vent stream away from a control device used to comply with the requirements in paragraphs (b) through (d) of this section shall comply with the requirements of Table 3 of this subpart and paragraph (j)(1) or (2) of this section. Equipment such as low leg drains, high point bleeds, analyzer vents, open-ended valves or lines, rupture disks and pressure relief valves needed for safety purposes are not subject to this paragraph.

(1) Install, calibrate, maintain, and operate a flow indicator that determines whether vent stream flow is present at least once every 15 minutes. Records shall be maintained as specified in § 63.1367(f)(1). The flow indicator shall be installed at the entrance to any bypass line that could divert the vent stream away from the control device to the atmosphere; or

(2) Secure the bypass line valve in the closed position with a car seal or lock and key type configuration. A visual inspection of the seal or closure mechanism shall be performed at least once every month to ensure that the valve is maintained in the closed position and the vent stream is not diverted through the bypass line. Records shall be maintained as specified in § 63.1367(f)(2).

(k) *Control requirements for certain liquid streams in open systems within a PAI process unit.* (1) The owner or operator shall comply with the provisions of Table 4 of this subpart, for each item of equipment meeting all the criteria specified in paragraphs (k)(2) through (4) of this section and either paragraph (k)(5)(i) or (ii) of this section.

(2) The item of equipment is of a type identified in Table 4 of this subpart;

(3) The item of equipment is part of a PAI process unit as defined in § 63.1361;

(4) The item of equipment is controlled less stringently than in Table 4 of this subpart, and the item of equipment is not otherwise exempt from controls by the provisions of this subpart or subpart A of this part;

(5) The item of equipment:

(i) Is a drain, drain hub, manhole, lift station, trench, pipe, or oil/water separator that conveys water with a total annual average concentration greater than or equal to 10,000 ppm by weight of compounds in Table 9 of subpart G of this part at any flowrate; or a total annual average concentration greater than or equal to 1,000 ppm by weight of compounds in Table 9 of subpart G of this part at an annual average flow rate greater than or equal to 10 liters per minute; or

(ii) Is a tank that receives one or more streams that contain water with a total annual average concentration greater than or equal to 1,000 ppm by weight of compounds in Table 9 of subpart G of this part at an annual average flowrate greater than or equal to 10 liters per minute. The owner or operator of the source shall determine the characteristics of the stream as specified in paragraphs (k)(5)(ii)(A) and (B) of this section.

(A) The characteristics of the stream being received shall be determined at the inlet to the tank.

(B) The characteristics shall be determined according to the procedures in § 63.144(b) and (c) of subpart G of this part.

(l) *Exemption for RCRA treatment units.* An owner or operator shall be exempt from the initial compliance demonstrations and monitoring provisions in §§ 63.1365 and 63.1366 and the associated recordkeeping and reporting requirements in §§ 63.1367 and 63.1368 for emissions from process vents, storage vessels, and waste management units that are discharged to the following devices:

(1) A boiler or process heater burning hazardous waste for which the owner or operator:

(i) Has been issued a final permit under 40 CFR part 270 and complies with the requirements of 40 CFR part 266, subpart H; or

(ii) Has certified compliance with the interim status requirements of 40 CFR part 266, subpart H.

(2) A hazardous waste incinerator for which the owner or operator has been issued a final permit under 40 CFR part 270 and complies with the requirements of 40 CFR part 264, subpart O, or has certified compliance with the interim status requirements of 40 CFR part 265, subpart O.

§ 63.1363 Standards for equipment leaks.

(a) *General equipment leak requirements.* (1) The provisions of this section apply to "equipment" as defined in § 63.1361 and any closed-vent systems and control devices required by this subpart.

(2) *Consistency with other regulations.* After the compliance date for a process, equipment subject to both this section and either of the following will be required to comply only with the provisions of this subpart:

(i) 40 CFR part 60.

(ii) 40 CFR part 61.

(3) [Reserved].

(4) The provisions in § 63.1(a)(3) of subpart A of this part do not alter the provisions in paragraph (a)(2) of this section.

(5) Lines and equipment not containing process fluids are not subject to the provisions of this section. Utilities, and other nonprocess lines, such as heating and cooling systems which do not combine their materials with those in the processes they serve, are not considered to be part of a process.

(6) The provisions of this section do not apply to bench-scale processes, regardless of whether the processes are located at the same plant site as a process subject to the provisions of this subpart MMM.

(7) Each piece of equipment to which this section applies shall be identified such that it can be distinguished readily from equipment that is not subject to this section. Identification of the equipment does not require physical tagging of the equipment. For example, the equipment may be identified on a plant site plan, in log entries, or by designation of process boundaries by some form of weatherproof identification. If changes are made to the affected source subject to the leak detection requirements, equipment identification for each type of component shall be updated, if needed, within 15 calendar days of the end of each monitoring period for that component.

(8) Equipment that is in vacuum service is excluded from the requirements of this section.

(9) Equipment that is in organic HAP service, but is in such service less than 300 hours per calendar year, is excluded from the requirements of this section if it is identified as required in paragraph (g)(9) of this section.

(10) When each leak is detected by visual, audible, or olfactory means, or by monitoring as described in § 63.180(b) or (c) of subpart H of this part, the following requirements apply:

(i) A weatherproof and readily visible identification, marked with the equipment identification number, shall be attached to the leaking equipment.

(ii) The identification on a valve or connector in light liquid or gas/vapor service may be removed after it has been monitored as specified in paragraph (e)(7)(iii) of this section and § 63.174(e) of subpart H of this part, and no leak has been detected during the follow-up monitoring.

(iii) The identification on equipment, except on a valve or connector in light liquid or gas/vapor service, may be removed after it has been repaired.

(b) *References.* The owner or operator shall comply with the provisions of subpart H of this part as specified in paragraphs (b)(1) through (3) of this section. When the term "process unit" is used in subpart H of this part, it shall mean any group of processes for the purposes of this subpart. Groups of processes as used in this subpart may be any individual process or combination of processes.

(1) Sections 63.160, 63.161, 63.162, 63.163, 63.167, 63.168, 63.170, 63.173, 63.175, 63.176, 63.181, and 63.182 of subpart H of this part shall not apply for the purposes of this subpart MMM. The owner or operator shall comply with the provisions specified in paragraphs (b)(1)(i) through (viii) of this section.

(i) Sections 63.160 and 63.162 of subpart H of this part shall not apply, instead the owner or operator shall comply with paragraph (a) of this section;

(ii) Section 63.161 of subpart H of this part shall not apply, instead the owner or operator shall comply with § 63.1361;

(iii) Sections 63.163 and 63.173 of subpart H of this part shall not apply,

instead the owner or operator shall comply with paragraph (c) of this section;

(iv) Section 63.167 of subpart H of this part shall not apply, instead the owner or operator shall comply with paragraph (d) of this section;

(v) Section 63.168 of subpart H of this part shall not apply, instead the owner or operator shall comply with paragraph (e) of this section;

(vi) Section 63.170 of subpart H of this part shall not apply, instead the owner or operator shall comply with § 63.1362(b);

(vii) Section 63.181 of subpart H of this part shall not apply, instead the owner or operator shall comply with paragraph (g) of this section; and

(viii) Section 63.182 of subpart H of this part shall not apply, instead the owner or operator shall comply with paragraph (h) of this section.

(2) The owner or operator shall comply with §§ 63.164, 63.165, 63.166, 63.169, 63.177, and 63.179 of subpart H of this part in their entirety, except that when these sections reference other sections of subpart H of this part, the owner or operator shall comply with the revised sections as specified in paragraphs (b)(1) and (3) of this section. Section 63.164 of subpart H of this part applies to compressors. Section 63.165 of subpart H of this part applies to pressure relief devices in gas/vapor service. Section 63.166 of subpart H of this part applies to sampling connection systems. Section 63.169 of subpart H of this part applies to: pumps, valves, connectors, and agitators in heavy liquid service; instrumentation systems; and pressure relief devices in liquid service. Section 63.177 of subpart H of this subpart applies to general alternative means of emission limitation. Section 63.179 of subpart H of this part applies to alternative means of emission limitation for enclosed-vented process units.

(3) The owner or operator shall comply with §§ 63.171, 63.172, 63.174, 63.178, and 63.180 of subpart H of this part with the differences specified in paragraphs (b)(3)(i) through (v) of this section.

(i) Section 63.171, Delay of repair, shall apply except § 63.171(a) shall not apply. Delay of repair of equipment for which leaks have been detected is allowed if one of the following conditions exist:

(A) The repair is technically infeasible without a process shutdown. Repair of this equipment shall occur by the end of the next scheduled process shutdown.

(B) The owner or operator determines that repair personnel would be exposed to an immediate danger if attempting to repair without a process shutdown. Repair of this equipment shall occur by the end of the next scheduled process shutdown.

(ii) Section 63.172, Closed-vent systems and control devices, shall apply for closed-vent systems used to comply with this section, and for control devices used to comply with this section only, except:

(A) Section 63.172(k) and (l) shall not apply. The owner or operator shall instead comply with paragraph (f) of this section.

(B) Owners or operators may, instead of complying with the provisions of § 63.172(f), design a closed-vent system to operate at a pressure below atmospheric pressure. The system shall be equipped with at least one pressure gauge or other pressure measurement device that can be read from a readily accessible location to verify that negative pressure is being maintained in the closed-vent system when the associated control device is operating.

(iii) Section 63.174, Connectors, shall apply except:

(A) Section 63.174(f) and (g) shall not apply. Instead of § 63.174(f) and (g), the owner or operator shall comply with paragraph (f) of this section.

(B) Days that the connectors are not in organic HAP service shall not be considered part of the 3-month period in § 63.174(e).

(C) Section 63.174(b)(3)(ii) of subpart H of this part shall not apply. Instead, if the percent leaking connectors in the group of process units was less than 0.5 percent, but equal to or greater than 0.25 percent, during the last required monitoring period, monitoring shall be performed once every 4 years. An owner or operator may comply with the requirements of this paragraph by monitoring at least 40 percent of the connectors in the first 2 years and the remainder of the connectors within the next 2 years. The percent leaking connectors will be calculated for the total of all monitoring performed during the 4-year period.

(D) Section 63.174(b)(3)(iv) of subpart H of this part shall not apply. Instead, the owner or operator shall increase the monitoring frequency to once every 2 years for the next monitoring period if leaking connectors comprise at least 0.5 percent but less than 1.0 percent of the connectors monitored within the 4 years specified in paragraph (b)(3)(iii)(C) of this section, or the first 4 years specified in § 63.174(b)(3)(iii) of subpart H of this part. At the end of that 2-year monitoring period, the owner or operator shall monitor once per year while the percent leaking connectors is greater than or equal to 0.5 percent; if the percent leaking connectors is less than 0.5 percent, the owner or operator may return to monitoring once every 4 years or may monitor in accordance with § 63.174(b)(3)(iii) of subpart H of this part, if appropriate.

(E) Section 63.174(b)(3)(v) of subpart H of this part shall not apply. Instead, if an owner or operator complying with the requirements of paragraph (b)(3)(iii)(C) and (D) of this section or § 63.174(b)(3)(iii) of subpart H of this part for a group of process units determines that 1 percent or greater of the connectors are leaking, the owner or operator shall increase the monitoring frequency to one time per year. The owner or operator may again elect to use the provisions of paragraphs (b)(3)(iii)(C) or (D) of this section after a monitoring period in which less than 0.5 percent of the connectors are determined to be leaking.

(F) Section 63.174(b)(3)(iii) of subpart H of this part shall not apply. Instead, monitoring shall be required once every 8 years, if the percent leaking connectors in the group of process units was less than 0.25 percent during the last required monitoring period. An owner or operator shall monitor at least 50 percent of the connectors in the first 4 years and the remainder of the connectors within the next 4 years. If the percent leaking connectors in the first 4 years is equal to or greater than 0.35 percent, the monitoring program shall revert at that time to the appropriate monitoring frequency specified in paragraphs (b)(3)(iii)(C), (D), or (E) of this section.

(iv) Section 63.178 of subpart H of this part, Alternative means of emission limitation: Batch processes, shall apply except that § 63.178(b) of subpart H of this part, requirements for pressure testing, shall apply to all processes, not just batch processes;

(v) Section 63.180 of subpart H of this part, Test methods and procedures, shall apply except § 63.180(b)(4)(ii)(A) through (C) of subpart H of this part shall not apply. Calibration gases shall be a mixture of methane and air at a concentration of approximately, but less than, 10,000 parts per million methane for agitators, 2,000 parts per million for pumps, and 500 parts per million for all other equipment, except as provided in § 63.180(b)(4)(iii) of subpart H of this part.

(c) *Standards for pumps in light liquid service and agitators in gas/vapor service and in light liquid service.* (1) The provisions of this section apply to each pump that is in light liquid service, and to each agitator in gas/vapor service or in light liquid service.

(2)(i) *Monitoring.* Each pump and agitator subject to this section shall be monitored quarterly to detect leaks by the method specified in § 63.180(b) of subpart H of this part, except as provided in § 63.177 of subpart H of this part, paragraph (f) of this section, and paragraphs (c)(5) through (c)(9) of this section.

(ii) *Leak definition.* The instrument reading, as determined by the method as specified in § 63.180(b) of subpart H of this part, that defines a leak is:

(A) For agitators, an instrument reading of 10,000 parts per million or greater.

(B) For pumps, an instrument reading of 2,000 parts per million or greater.

(iii) *Visual inspections.* Each pump and agitator shall be checked by visual inspection each calendar week for indications of liquids dripping from the pump or agitator seal. If there are indications of liquids dripping from the seal, a leak is detected.

(3) *Repair provisions.* (i) When a leak is detected, it shall be repaired as soon as practicable, but not later than 15 calendar days after it is detected, except as provided in paragraph (b)(3)(i) of this section.

(ii) A first attempt at repair shall be made no later than 5 calendar days after the leak is detected. First attempts at repair include, but are not limited to, the following practices where practicable:

(A) Tightening of packing gland nuts.

(B) Ensuring that the seal flush is operating at design pressure and temperature.

(4) *Calculation of percent leakers.* (i) The owner or operator shall decide no later than the end of the first monitoring period what groups of processes will be developed. Once the owner or operator has decided, all subsequent percent calculations shall be made on the same basis.

(ii) If, calculated on a 1 year rolling average, the greater of either 10 percent or three of the pumps in a group of processes leak, the owner or operator shall monitor each pump once per month.

(iii) The number of pumps in a group of processes shall be the sum of all the pumps in organic HAP service, except that pumps found leaking in a continuous process within 1 quarter after startup of the pump shall not count in the percent leaking pumps calculation for that one monitoring period only.

(iv) Percent leaking pumps shall be determined using Equation 3 of this subpart:

$$\%P_L = \left[(P_L - P_S)/(P_T - P_S)\right] \times 100 \qquad \text{(Eq. 3)}$$

where:

$\%P_L$ = percent leaking pumps

P_L = number of pumps found leaking as determined through quarterly monitoring as required in paragraphs (c)(2)(i) and (ii) of this section.

P_T = total pumps in organic HAP service, including those meeting the criteria in paragraphs (c)(5) and (6) of this section

P_S = number of pumps in a continuous process leaking within 1 quarter of startup during the current monitoring period

(5) *Exemptions.* Each pump or agitator equipped with a dual mechanical seal system that includes a barrier fluid system is exempt from the requirements of paragraphs (c)(1) through (c)(4)(iii) of this section, provided the following requirements are met:

(i) Each dual mechanical seal system is:

(A) Operated with the barrier fluid at a pressure that is at all times greater than the pump/agitator stuffing box pressure; or

(B) Equipped with a barrier fluid degassing reservoir that is connected by a closed-vent system to a control device that complies with the requirements of paragraph (b)(3)(ii) of this section; or

(C) Equipped with a closed-loop system that purges the barrier fluid into a process stream.

(ii) The barrier fluid is not in light liquid service.

(iii) Each barrier fluid system is equipped with a sensor that will detect failure of the seal system, the barrier fluid system, or both.

(iv) Each pump/agitator is checked by visual inspection each calendar week for indications of liquids dripping from the pump/agitator seal.

(A) If there are indications of liquids dripping from the pump/agitator seal at the time of the weekly inspection, the pump/agitator shall be monitored as specified in § 63.180(b) of subpart H of this part to determine if there is a leak of organic HAP in the barrier fluid.

(B) If an instrument reading of 2,000 parts per million or greater is measured for pumps, or 10,000 parts per million or greater is measured for agitators, a leak is detected.

(v) Each sensor as described in paragraph (c)(5)(iii) of this section is observed daily or is equipped with an alarm unless the pump is located within the boundary of an unmanned plant site.

(vi)(A) The owner or operator determines, based on design considerations and operating experience, criteria applicable to the presence and frequency of drips and to the sensor that indicate failure of the seal system, the barrier fluid system, or both.

(B) If indications of liquids dripping from the pump/agitator seal exceed the criteria established in paragraph (c)(5)(vi)(A) of this section, or if, based on the criteria established in paragraph (c)(5)(vi)(A) of this section, the sensor indicates failure of the seal system, the barrier fluid system, or both, a leak is detected.

(C) When a leak is detected, it shall be repaired as soon as practicable, but not later than 15 calendar days after it is detected, except as provided in paragraph (b)(3)(i) of this section.

(D) A first attempt at repair shall be made no later than 5 calendar days after each leak is detected.

(6) Any pump/agitator that is designed with no externally actuated shaft penetrating the pump/agitator housing is exempt from the requirements of paragraphs (c)(1) through (4) of this section, except for the requirements of paragraph (c)(2)(iii) of this section and, for pumps, paragraph (c)(4)(iv) of this section.

(7) Any pump/agitator equipped with a closed-vent system capable of capturing and transporting any leakage from the seal or seals back to the process or to a control device that complies with the requirements of paragraph (b)(3)(ii) of this section is exempt from the requirements of paragraphs (c)(2) through (5) of this section.

(8) Any pump/agitator that is located within the boundary of an unmanned plant site is exempt from the weekly visual inspection requirement of paragraphs (c)(2)(iii) and (c)(5)(iv) of this section, and the daily requirements of paragraph (c)(5)(v) of this section, provided that each pump/agitator is visually inspected as often as practicable and at least monthly.

(9) If more than 90 percent of the pumps in a group of processes meet the criteria in either paragraph (c)(5) or (6) of this section, the process is exempt

from the requirements of paragraph (c)(4) of this section.

(d) *Standards: open-ended valves or lines.* (1)(i) Each open-ended valve or line shall be equipped with a cap, blind flange, plug, or a second valve, except as provided in § 63.177 of subpart H of this part and paragraphs (d)(4) through (6) of this section.

(ii) The cap, blind flange, plug, or second valve shall seal the open end at all times except during operations requiring process fluid flow through the open-ended valve or line, or during maintenance or repair. The cap, blind flange, plug, or second valve shall be in place within 1 hour of cessation of operations requiring process fluid flow through the open-ended valve or line, or within 1 hour of cessation of maintenance or repair.

(2) Each open-ended valve or line equipped with a second valve shall be operated in a manner such that the valve on the process fluid end is closed before the second valve is closed.

(3) When a double block and bleed system is being used, the bleed valve or line may remain open during operations that require venting the line between the block valves but shall comply with paragraph (d)(1) of this section at all other times.

(4) Open-ended valves or lines in an emergency shutdown system which are designed to open automatically in the event of a process upset are exempt from the requirements of paragraphs (d)(1) through (3) of this section.

(5) Open-ended valves or lines containing materials which would autocatalytically polymerize are exempt from the requirements of paragraphs (d)(1) through (3) of this section.

(6) Open-ended valves or lines containing materials which could cause an explosion, serious overpressure, or other safety hazard if capped or equipped with a double block and bleed system as specified in paragraphs (d)(1) through (3) of this section are exempt from the requirements of paragraphs (d)(1) through (3) of this section.

(e) *Standards: valves in gas/vapor service and in light liquid service.* (1) The provisions of this section apply to valves that are either in gas/vapor service or in light liquid service.

(2) For existing and new affected sources, all valves subject to this section shall be monitored, except as provided in paragraph (f) of this section and in § 63.177 of subpart H of this part, by no later than 1 year after the compliance date.

(3) *Monitoring.* The owner or operator of a source subject to this section shall monitor all valves, except as provided in paragraph (f) of this section and in § 63.177 of subpart H of this part, at the intervals specified in paragraph (e)(4) of this section and shall comply with all other provisions of this section, except as provided in paragraph (b)(3)(i) of this section and §§ 63.178 and 63.179 of subpart H of this part.

(i) The valves shall be monitored to detect leaks by the method specified in § 63.180(b) of subpart H of this part.

(ii) An instrument reading of 500 parts per million or greater defines a leak.

(4) *Subsequent monitoring frequencies.* After conducting the initial survey required in paragraph (e)(2) of this section, the owner or operator shall monitor valves for leaks at the intervals specified below:

(i) For a group of processes with 2 percent or greater leaking valves, calculated according to paragraph (e)(6) of this section, the owner or operator shall monitor each valve once per month, except as specified in paragraph (e)(9) of this section.

(ii) For a group of processes with less than 2 percent leaking valves, the owner or operator shall monitor each valve once each quarter, except as provided in paragraphs (e)(4)(iii) through (v) of this section.

(iii) For a group of processes with less than 1 percent leaking valves, the owner or operator may elect to monitor each valve once every 2 quarters.

(iv) For a group of processes with less than 0.5 percent leaking valves, the owner or operator may elect to monitor each valve once every 4 quarters.

(v) For a group of processes with less than 0.25 percent leaking valves, the owner or operator may elect to monitor each valve once every 2 years.

(5) *Calculation of percent leakers.* For a group of processes to which this subpart applies, the owner or operator may choose to subdivide the valves in the applicable group of processes and apply the provisions of paragraph (e)(4) of this section to each subgroup. If the owner or operator elects to subdivide the valves in the applicable group of processes, then the provisions of paragraphs (e)(5)(i) through (viii) of this section apply.

(i) The overall performance of total valves in the applicable group of processes must be less than 2 percent leaking valves, as detected according to paragraphs (e)(3)(i) and (ii) of this section and as calculated according to paragraphs (e)(6)(ii) and (iii) of this section.

(ii) The initial assignment or subsequent reassignment of valves to subgroups shall be governed by the provisions of paragraphs (e)(5)(ii) (A) through (C) of this section.

(A) The owner or operator shall determine which valves are assigned to each subgroup. Valves with less than 1 year of monitoring data or valves not monitored within the last 12 months must be placed initially into the most frequently monitored subgroup until at least 1 year of monitoring data have been obtained.

(B) Any valve or group of valves can be reassigned from a less frequently monitored subgroup to a more frequently monitored subgroup provided that the valves to be reassigned were monitored during the most recent monitoring period for the less frequently monitored subgroup. The monitoring results must be included with the less frequently monitored subgroup's monitoring event and associated next percent leaking valves calculation for that group.

(C) Any valve or group of valves can be reassigned from a more frequently monitored subgroup to a less frequently monitored subgroup provided that the valves to be reassigned have not leaked for the period of the less frequently monitored subgroup (e.g., for the last 12 months, if the valve or group of valves is to be reassigned to a subgroup being monitored annually). Nonrepairable valves may not be reassigned to a less frequently monitored subgroup.

(iii) The owner or operator shall determine every 6 months if the overall performance of total valves in the applicable group of processes is less than 2 percent leaking valves and so indicate the performance in the next Periodic report. If the overall performance of total valves in the applicable group of processes is 2 percent leaking valves or greater, the owner or operator shall revert to the program required in paragraphs (e)(2) through (4) of this section. The overall performance of total valves in the applicable group of processes shall be calculated as a weighted average of the percent leaking valves of each subgroup according to Equation 4 of this subpart:

$$\%V_{LO} = \frac{\sum_{i=1}^{n}\left(\%V_{Li} \times V_i\right)}{\sum_{i=1}^{n} V_i} \qquad \text{(Eq. 4)}$$

where:

$\%V_{LO}$ = overall performance of total valves in the applicable group of processes

$\%V_{Li}$ = percent leaking valves in subgroup i, most recent value calculated according to the procedures in paragraphs (e)(6)(ii) and (iii) of this section

V_i = number of valves in subgroup i

n = number of subgroups

(iv) *Records.* In addition to records required by paragraph (g) of this section, the owner or operator shall maintain records specified in paragraphs (e)(5)(iv)(A) through (D) of this section.

(A) Which valves are assigned to each subgroup.

(B) Monitoring results and calculations made for each subgroup for each monitoring period.

(C) Which valves are reassigned and when they were reassigned, and

(D) The results of the semiannual overall performance calculation required in paragraph (e)(5)(iii) of this section.

(v) The owner or operator shall notify the Administrator no later than 30 days prior to the beginning of the next monitoring period of the decision to subgroup valves. The notification shall identify the participating processes and the valves assigned to each subgroup.

(vi) *Semiannual reports.* In addition to the information required by paragraph (h)(3) of this section, the owner or operator shall submit in the Periodic reports the information specified in paragraphs (e)(5)(vi)(A) and (B) of this section.

(A) Valve reassignments occurring during the reporting period, and

(B) Results of the semiannual overall performance calculation required by paragraph (e)(5)(iii) of this section.

(vii) To determine the monitoring frequency for each subgroup, the calculation procedures of paragraph (e)(6)(iii) of this section shall be used.

(viii) Except for the overall performance calculations required by paragraphs (e)(5)(i) and (iii) of this section, each subgroup shall be treated as if it were a process for the purposes of applying the provisions of this section.

(6)(i) The owner or operator shall decide no later than the implementation date of this subpart or upon revision of an operating permit how to group the processes. Once the owner or operator has decided, all subsequent percentage calculations shall be made on the same basis.

(ii) Percent leaking valves for each group of processes or subgroup shall be determined using Equation 5 of this subpart:

$$\%V_L = [V_L / V_T] \times 100 \qquad \text{(Eq. 5)}$$

Where:

$\%V_L$ = percent leaking valves

V_L = number of valves found leaking excluding nonrepairables as provided in paragraph (e)(6)(iv)(A) of this section

V_T = total valves monitored, in a monitoring period excluding valves monitored as required by paragraph (e)(7)(iii) of this section

(iii) When determining monitoring frequency for each group of processes or subgroup subject to monthly, quarterly, or semiannual monitoring frequencies, the percent leaking valves shall be the arithmetic average of the percent leaking valves from the last two monitoring periods. When determining monitoring frequency for each group of processes or subgroup subject to annual or biennial (once every 2 years) monitoring frequencies, the percent leaking valves shall be the arithmetic average of the percent leaking valves from the last three monitoring periods.

(iv)(A) Nonrepairable valves shall be included in the calculation of percent leaking valves the first time the valve is identified as leaking and nonrepairable and as required to comply with paragraph (e)(6)(iv)(B) of this section. Otherwise, a number of nonrepairable valves (identified and included in the percent leaking calculation in a previous period) up to a maximum of 1 percent of the total number of valves in organic HAP service at a process may be excluded from calculation of percent leaking valves for subsequent monitoring periods.

(B) If the number of nonrepairable valves exceeds 1 percent of the total number of valves in organic HAP service at a process, the number of nonrepairable valves exceeding 1 percent of the total number of valves in organic HAP service shall be included in the calculation of percent leaking valves.

(7) *Repair provisions.* (i) When a leak is detected, it shall be repaired as soon as practicable, but no later than 15 calendar days after the leak is detected, except as provided in paragraph (b)(3)(i) of this section.

(ii) A first attempt at repair shall be made no later than 5 calendar days after each leak is detected.

(iii) When a leak is repaired, the valve shall be monitored at least once within the first 3 months after its repair. Days that the valve is not in organic HAP service shall not be considered part of this 3-month period.

(8) First attempts at repair include, but are not limited to, the following practices where practicable:

(i) Tightening of bonnet bolts,

(ii) Replacement of bonnet bolts,

(iii) Tightening of packing gland nuts, and

(iv) Injection of lubricant into lubricated packing.

(9) Any equipment located at a plant site with fewer than 250 valves in organic HAP service in the affected source is exempt from the requirements for monthly monitoring specified in paragraph (e)(4)(i) of this section. Instead, the owner or operator shall monitor each valve in organic HAP service for leaks once each quarter, or comply with paragraphs (e)(4)(iii) or (iv) of this section.

(f) *Unsafe to monitor, difficult to monitor, and inaccessible equipment.* (1) Equipment that is designated as unsafe to monitor, difficult to monitor, or inaccessible is exempt from the requirements as specified in paragraphs (f)(1) (i) through (iv) of this section provided the owner or operator meets the requirements specified in paragraph (f) (2), (3), or (4) of this section, as applicable. Ceramic or ceramic-lined connectors are subject to the same requirements as inaccessible connectors.

(i) For pumps and agitators, paragraphs (c) (2), (3), and (4) of this section do not apply.

(ii) For valves, paragraphs (e)(2) through (7) of this section do not apply.

(iii) For closed-vent systems, § 63.172(f)(1), (f)(2), and (g) of subpart H of this part do not apply.

(iv) For connectors, § 63.174(b) through (e) of subpart H of this part do not apply.

(2) *Equipment that is unsafe to monitor.* (i) Equipment may be designated as unsafe to monitor if the owner or operator determines that monitoring personnel would be exposed to an immediate danger as a consequence of complying with the monitoring requirements identified in paragraphs (f)(1)(i) through (iv) of this section.

(ii) The owner or operator of equipment that is designated as unsafe-to-monitor must have a written plan that requires monitoring of the equipment as frequently as practicable during safe-to-monitor times, but not more frequently than the periodic monitoring schedule otherwise applicable.

(3) *Equipment that is difficult to monitor.* (i) Equipment may be designated as difficult to monitor if the owner or operator determines that the equipment cannot be monitored without elevating the monitoring personnel more than 2 meters above a support surface or the equipment is not accessible at anytime in a safe manner;

(ii) At an existing source, any equipment within a group of processes that meets the criteria of paragraph (f)(3)(i) of this section may be designated as difficult to monitor. At a new affected source, an owner or operator may designate no more than 3 percent of each type of equipment as difficult to monitor.

(iii) The owner or operator of equipment designated as difficult to monitor must follow a written plan that requires monitoring of the equipment at least once per calendar year.

(4) *Inaccessible equipment and ceramic or ceramic-lined connectors.* (i) A connector, agitator, or valve may be designated as inaccessible if it is:

(A) Buried;

(B) Insulated in a manner that prevents access to the equipment by a monitor probe;

(C) Obstructed by equipment or piping that prevents access to the equipment by a monitor probe;

(D) Unable to be reached from a wheeled scissor-lift or hydraulic-type scaffold which would allow access to equipment up to 7.6 meters above the ground; or

(E) Not able to be accessed at any time in a safe manner to perform monitoring. Unsafe access includes, but is not limited to, the use of a wheeled scissor-lift on unstable or uneven terrain, the use of a motorized man-lift basket in areas where an ignition potential exists, or access would require near proximity to hazards such as electrical lines, or would risk damage to equipment.

(ii) At an existing source, any connector, agitator, or valve that meets the criteria of paragraph (f)(4)(i) of this section may be designated as inaccessible. At a new affected source, an owner or operator may designate no more than 3 percent of each type of equipment as inaccessible.

(iii) If any inaccessible equipment or ceramic or ceramic-lined connector is observed by visual, audible, olfactory, or other means to be leaking, the leak shall be repaired as soon as practicable, but no later than 15 calendar days after the leak is detected, except as provided in paragraph (b)(3)(i) of this section.

(g) *Recordkeeping requirements.* (1) An owner or operator of more than one group of processes subject to the provisions of this section may comply with the recordkeeping requirements for the groups of processes in one recordkeeping system if the system identifies with each record the program being implemented (e.g., quarterly monitoring) for each type of equipment. All records and information required by this section shall be maintained in a manner that can be readily accessed at the plant site. This could include physically locating the records at the plant site or accessing the records from a central location by computer at the plant site.

(2) *General recordkeeping.* Except as provided in paragraph (g)(5) of this section, the following information pertaining to all equipment subject to the requirements in this section shall be recorded:

(i)(A) A list of identification numbers for equipment (except instrumentation systems) subject to the requirements of this section. Connectors, except those subject to paragraph (f) of this section, need not be individually identified if all connectors in a designated area or length of pipe subject to the provisions of this section are identified as a group, and the number of subject connectors is indicated. The list for each type of equipment shall be completed no later than the completion of the initial survey required for that component. The list of identification numbers shall be updated, if needed, to incorporate equipment changes within 15 calendar days of the completion of each monitoring survey for the type of equipment component monitored.

(B) A schedule for monitoring connectors subject to the provisions of § 63.174(a) of subpart H of this part and valves subject to the provisions of paragraph (e)(4) of this section.

(C) Physical tagging of the equipment is not required to indicate that it is in organic HAP service. Equipment subject to the provisions of this section may be identified on a plant site plan, in log entries, or by other appropriate methods.

(ii)(A) A list of identification numbers for equipment that the owner or operator elects to equip with a closed-vent system and control device, under the provisions of paragraph (c)(7) of this section or §§ 63.164(h) or 63.165(c) of subpart H of this part.

(B) A list of identification numbers for compressors that the owner or operator elects to designate as operating with an instrument reading of less than 500 parts per million above background, under the provisions of § 63.164(i) of subpart H of this part.

(iii)(A) A list of identification numbers for pressure relief devices subject to the provisions in § 63.165(a) of subpart H of this part.

(B) A list of identification numbers for pressure relief devices equipped with rupture disks, under the provisions of § 63.165(d) of subpart H of this part.

(iv) Identification of instrumentation systems subject to the provisions of this section. Individual components in an instrumentation system need not be identified.

(v) The following information shall be recorded for each dual mechanical seal system:

(A) Design criteria required by paragraph (c)(5)(vi)(A) of this section and § 63.164(e)(2) of subpart H of this part, and an explanation of the design criteria; and

(B) Any changes to these criteria and the reasons for the changes.

(vi) A list of equipment designated as unsafe to monitor, difficult to monitor, or inaccessible under paragraphs (f) or (b)(3)(i)(B) of this section and a copy of the plan for monitoring or inspecting this equipment.

(vii) A list of connectors removed from and added to the process, as described in § 63.174(i)(1) of subpart H of this part, and documentation of the integrity of the weld for any removed connectors, as required in § 63.174(j) of subpart H of this part. This is not required unless the net credits for removed connectors is expected to be used.

(viii) For batch processes that the owner or operator elects to monitor as provided under § 63.178(c) of subpart H of this part, a list of equipment added to batch product processes since the last monitoring period required in § 63.178(c)(3)(ii) and (iii) of subpart H of this part. This list must be completed for each type of equipment within 15 calendar days of the completion of the each monitoring survey for the type of equipment monitored.

(3) *Records of visual inspections.* For visual inspections of equipment subject to the provisions of paragraphs (c)(2)(iii) and (c)(5)(iv) of this section, the owner or operator shall document that the inspection was conducted and the date of the inspection. The owner or operator shall maintain records as specified in paragraph (g)(4) of this section for leaking equipment identified in this inspection, except as provided in paragraph (g)(5) of this section. These records shall be retained for 5 years.

(4) *Monitoring records.* When each leak is detected as specified in paragraphs (c) and (e) of this section and §§ 63.164, 63.169, 63.172, and 63.174 of subpart H of this part, the owner or operator shall record the information specified in paragraphs (g)(4)(i) through (ix) of this section. All records shall be retained for 5 years, in accordance with the requirements of § 63.10(b)(1) of subpart A of this part.

(i) The instrument and the equipment identification number and the operator name, initials, or identification number.

(ii) The date the leak was detected and the date of first attempt to repair the leak.

(iii) The date of successful repair of the leak.

(iv) If postrepair monitoring is required, maximum instrument reading measured by Method 21 of 40 CFR part 60, appendix A, after it is successfully repaired or determined to be nonrepairable.

(v) "Repair delayed" and the reason for the delay if a leak is not repaired within 15 calendar days after discovery of the leak.

(A) The owner or operator may develop a written procedure that identifies the conditions that justify a delay of repair. The written procedures may be included as part of the startup/shutdown/malfunction plan, required by § 63.1367(a), for the source or may be part of a separate document that is maintained at the plant site. Reasons for delay of repair may be documented by citing the relevant sections of the written procedure.

(B) If delay of repair was caused by depletion of stocked parts, there must be documentation that the spare parts were sufficiently stocked onsite before depletion and the reason for depletion.

(vi) If repairs were delayed, dates of process shutdowns that occur while the equipment is unrepaired.

(vii)(A) If the alternative in § 63.174(c)(1)(ii) of subpart H of this part is not in use for the monitoring period, identification, either by list, location (area or grouping), or tagging of connectors disturbed since the last monitoring period required in § 63.174(b) of subpart H of this part, as described in § 63.174(c)(1) of subpart H of this part.

(B) The date and results of follow-up monitoring as required in § 63.174(c) of subpart H of this part. If identification of disturbed connectors is made by location, then all connectors within the designated location shall be monitored.

(viii) The date and results of the monitoring required in § 63.178(c)(3)(i) of subpart H of this part for equipment added to a batch process since the last monitoring period required in § 63.178(c)(3)(ii) and (iii) of subpart H of this part. If no leaking equipment is found in this monitoring, the owner or operator shall record that the inspection was performed. Records of the actual monitoring results are not required.

(ix) Copies of the periodic reports as specified in paragraph (h)(3) of this section, if records are not maintained on a computerized data base capable of generating summary reports from the records.

(5) *Records of pressure tests.* The owner or operator who elects to pressure test a process equipment train and supply lines between storage and processing areas to demonstrate compliance with this section is exempt from the requirements of paragraphs (g)(2), (3), (4), and (6) of this section. Instead, the owner or operator shall maintain records of the following information:

(i) The identification of each product, or product code, produced during the calendar year. It is not necessary to identify individual items of equipment in the process equipment train.

(ii) Records demonstrating the proportion of the time during the calendar year the equipment is in use in the process that is subject to the provisions of this subpart. Examples of suitable documentation are records of time in use for individual pieces of equipment or average time in use for the process unit. These records are not required if the owner or operator does not adjust monitoring frequency by the time in use, as provided in § 63.178(c)(3)(iii) of subpart H of this part.

(iii) Physical tagging of the equipment to identify that it is in organic HAP service and subject to the provisions of this section is not required. Equipment in a process subject to the provisions of this section may be identified on a plant site plan, in log entries, or by other appropriate methods.

(iv) The dates of each pressure test required in § 63.178(b) of subpart H of this part, the test pressure, and the pressure drop observed during the test.

(v) Records of any visible, audible, or olfactory evidence of fluid loss.

(vi) When a process equipment train does not pass two consecutive pressure tests, the following information shall be recorded in a log and kept for 2 years:

(A) The date of each pressure test and the date of each leak repair attempt.

(B) Repair methods applied in each attempt to repair the leak.

(C) The reason for the delay of repair.

(D) The expected date for delivery of the replacement equipment and the actual date of delivery of the replacement equipment.

(E) The date of successful repair.

(6) *Records of compressor and pressure relief valve compliance tests.* The dates and results of each compliance test required for compressors subject to the provisions in § 63.164(i) of subpart H of this part and the dates and results of the monitoring following a pressure release for each pressure relief device subject to the provisions in § 63.165(a) and (b) of subpart H of this part. The results shall include:

(i) The background level measured during each compliance test.

(ii) The maximum instrument reading measured at each piece of equipment during each compliance test.

(7) *Records for closed-vent systems.* The owner or operator shall maintain records of the information specified in paragraphs (g)(7)(i) through (iii) of this section for closed-vent systems and control devices subject to the provisions of paragraph (b)(3)(ii) of this section. The records specified in paragraph (g)(7)(i) of this section shall be retained for the life of the equipment. The records specified in paragraphs (g)(7)(ii) and (iii) of this section shall be retained for 5 years.

(i) The design specifications and performance demonstrations specified in paragraphs (g)(7)(i)(A) through (D) of this section.

(A) Detailed schematics, design specifications of the control device, and piping and instrumentation diagrams.

(B) The dates and descriptions of any changes in the design specifications.

(C) The flare design (i.e., steam assisted, air assisted, or nonassisted) and the results of the compliance demonstration required by § 63.11(b) of subpart A of this part.

(D) A description of the parameter or parameters monitored, as required in paragraph (b)(3)(ii) of this section, to ensure that control devices are operated and maintained in conformance with their design and an explanation of why that parameter (or parameters) was selected for the monitoring.

(ii) Records of operation of closed-vent systems and control devices.

(A) Dates and durations when the closed-vent systems and control devices required in paragraph (c) of this section and §§ 63.164 through 63.166 of subpart H of this part are not operated as designed as indicated by the monitored parameters, including periods when a flare pilot light system does not have a flame.

(B) Dates and durations during which the monitoring system or monitoring device is inoperative.

(C) Dates and durations of startups and shutdowns of control devices required in paragraph (c) of this section and §§ 63.164 through 63.166 of subpart H of this part.

(iii) Records of inspections of closed-vent systems subject to the provisions of § 63.172 of subpart H of this part.

(A) For each inspection conducted in accordance with the provisions of § 63.172(f)(1) or (2) of subpart H of this part during which no leaks were detected, a record that the inspection was performed, the date of the inspection, and a statement that no leaks were detected.

(B) For each inspection conducted in accordance with the provisions of § 63.172(f)(1) or (f)(2) of subpart H of this part during which leaks were detected, the information specified in paragraph (g)(4) of this section shall be recorded.

(8) *Records for components in heavy liquid service.* Information, data, and

analysis used to determine that a piece of equipment or process is in heavy liquid service shall be recorded. Such a determination shall include an analysis or demonstration that the process fluids do not meet the criteria of "in light liquid or gas/vapor service." Examples of information that could document this include, but are not limited to, records of chemicals purchased for the process, analyses of process stream composition, engineering calculations, or process knowledge.

(9) *Records of exempt components.* Identification, either by list, location (area or group), or other method of equipment in organic HAP service less than 300 hr/yr subject to the provisions of this section.

(10) *Records of alternative means of compliance determination.* Owners and operators choosing to comply with the requirements of § 63.179 of subpart H of this part shall maintain the following records:

(i) Identification of the process(es) and the organic HAP they handle.

(ii) A schematic of the process, enclosure, and closed-vent system.

(iii) A description of the system used to create a negative pressure in the enclosure to ensure that all emissions are routed to the control device.

(h) *Reporting Requirements.* (1) Each owner or operator of a source subject to this section shall submit the reports listed in paragraphs (h)(1)(i) and (ii) of this section.

(i) A Notification of Compliance Status report described in paragraph (h)(2) of this section, and

(ii) Periodic reports described in paragraph (h)(3) of this section.

(2) *Notification of compliance status report.* Each owner or operator of a source subject to this section shall submit the information specified in paragraphs (h)(2)(i) through (iii) of this section in the Notification of Compliance Status report described in § 63.1368(f). Section 63.9(j) of subpart A of this part shall not apply to the Notification of Compliance Status report.

(i) The notification shall provide the information listed in paragraphs (h)(2)(i)(A) through (C) of this section for each group of processes subject to the requirements of paragraphs (b) through (g) of this section.

(A) Identification of the group of processes.

(B) Approximate number of each equipment type (e.g., valves, pumps) in organic HAP service, excluding equipment in vacuum service.

(C) Method of compliance with the standard (for example, "monthly leak detection and repair" or "equipped with dual mechanical seals").

(ii) The notification shall provide the information listed in paragraphs (h)(2)(ii)(A) and (B) of this section for each process subject to the requirements of paragraph (b)(3)(iv) of this section and § 63.178(b) of subpart H of this part.

(A) Products or product codes subject to the provisions of this section, and

(B) Planned schedule for pressure testing when equipment is configured for production of products subject to the provisions of this section.

(iii) The notification shall provide the information listed in paragraphs (h)(2)(iii)(A) and (B) of this section for each process subject to the requirements in § 63.179 of subpart H of this part.

(A) Process identification.

(B) A description of the system used to create a negative pressure in the enclosure and the control device used to comply with the requirements of paragraph (b)(3)(ii) of this section.

(3) *Periodic reports.* The owner or operator of a source subject to this section shall submit Periodic reports.

(i) A report containing the information in paragraphs (h)(3)(ii), (iii), and (iv) of this section shall be submitted semiannually. The first Periodic report shall be submitted no later than 240 days after the date the Notification of Compliance Status report is due and shall cover the 6-month period beginning on the date the Notification of Compliance Status report is due. Each subsequent Periodic report shall cover the 6-month period following the preceding period.

(ii) For equipment complying with the provisions of paragraphs (b) through (g) of this section, the Periodic report shall contain the summary information listed in paragraphs (h)(3)(ii)(A) through (L) of this section for each monitoring period during the 6-month period.

(A) The number of valves for which leaks were detected as described in paragraph (e)(2) of this section, the percent leakers, and the total number of valves monitored;

(B) The number of valves for which leaks were not repaired as required in paragraph (e)(7) of this section, identifying the number of those that are determined nonrepairable;

(C) The number of pumps and agitators for which leaks were detected as described in paragraph (c)(2) of this section, the percent leakers, and the total number of pumps and agitators monitored;

(D) The number of pumps and agitators for which leaks were not repaired as required in paragraph (c)(3) of this section;

(E) The number of compressors for which leaks were detected as described in § 63.164(f) of subpart H of this part;

(F) The number of compressors for which leaks were not repaired as required in § 63.164(g) of subpart H of this part;

(G) The number of connectors for which leaks were detected as described in § 63.174(a) of subpart H of this part, the percent of connectors leaking, and the total number of connectors monitored;

(H) The number of connectors for which leaks were not repaired as required in § 63.174(d) of subpart H of this part, identifying the number of those that are determined nonrepairable;

(I) The facts that explain any delay of repairs and, where appropriate, why a process shutdown was technically infeasible.

(J) The results of all monitoring to show compliance with §§ 63.164(i), 63.165(a), and 63.172(f) of subpart H of this part conducted within the semiannual reporting period.

(K) If applicable, the initiation of a monthly monitoring program under either paragraph (c)(4)(ii) or paragraph (e)(4)(i)(A) of this section.

(L) If applicable, notification of a change in connector monitoring alternatives as described in § 63.174(c)(1) of subpart H of this part.

(iii) For owners or operators electing to meet the requirements of § 63.178(b) of subpart H of this part, the Periodic report shall include the information listed in paragraphs (h)(3)(iii) (A) through (E) of this section for each process.

(A) Product process equipment train identification;

(B) The number of pressure tests conducted;

(C) The number of pressure tests where the equipment train failed either the retest or two consecutive pressure tests;

(D) The facts that explain any delay of repairs; and

(E) The results of all monitoring to determine compliance with § 63.172(f) of subpart H of this part.

(iv) Any change in the information submitted under paragraph (h)(2) of this section shall be provided in the next Periodic report.

§ 63.1364 Compliance dates.

(a) *Compliance dates for existing sources.* (1) An owner or operator of an existing affected source must comply with the provisions of this subpart within 3 years after June 23, 1999.

(2) Pursuant to section 112(i)(3)(B) of the CAA, an owner or operator of an existing source may request an

extension of up to 1 additional year to comply with the provisions of this subpart if the additional time is needed for the installation of controls.

(i) For purposes of this subpart, a request for an extension shall be submitted no later than 120 days prior to the compliance date specified in paragraph (a)(1) of this section, except as provided in paragraph (a)(2)(ii) of this section. The dates specified in § 63.6(i) of subpart A of this part for submittal of requests for extensions shall not apply to sources subject to this subpart.

(ii) An owner or operator may submit a compliance extension request after the date specified in paragraph (a)(1)(i) of this section provided the need for the compliance extension arose after that date and before the otherwise applicable compliance date, and the need arose due to circumstances beyond reasonable control of the owner or operator. This request shall include the data described in § 63.6(i)(8)(A), (B), and (D) of subpart A of this part.

(b) *Compliance dates for new and reconstructed sources.* An owner or operator of a new or reconstructed affected source must comply with the provisions of this subpart on June 23, 1999 or upon startup, whichever is later.

§ 63.1365 Test methods and initial compliance procedures.

(a) *General.* Except as specified in paragraph (a)(4) of this section, the procedures specified in paragraphs (c), (d), (e), (f), and (g) of this section are required to demonstrate initial compliance with § 63.1362(b), (c), (d), (f), and (g), respectively. The provisions in paragraph (a)(1) of this section apply to design evaluations that are used to demonstrate compliance with the standards for process vents and storage vessels. The provisions in paragraph (a)(2) of this section apply to performance tests that are specified in paragraphs (c), (d), and (e) of this section. The provisions in paragraph (a)(3) of this section describe initial compliance procedures for flares. The provisions in paragraph (a)(5) of this section are used to demonstrate initial compliance with the alternative standards specified in § 63.1362(b)(6) and (c)(4). The provisions in paragraph (a)(6) of this section are used to comply with the outlet concentration requirements specified in § 63.1362(b)(2)(iv)(A), (b)(3)(ii), (b)(4)(ii)(A), (b)(5)(ii), and (b)(5)(iii).

(1) *Design evaluation.* To demonstrate that a control device meets the required control efficiency, a design evaluation must address the composition and HAP concentration of the vent stream entering the control device. A design evaluation also must address other vent stream characteristics and control device operating parameters as specified in any one of paragraphs (a)(1)(i) through (vii) of this section, depending on the type of control device that is used. If the vent stream is not the only inlet to the control device, the efficiency demonstration also must consider all other vapors, gases, and liquids, other than fuels, received by the control device.

(i) For an enclosed combustion device used to comply with the provisions of § 63.1362(b)(2)(iv), (b)(4)(ii), (c)(2)(iv)(B), or (c)(3) with a minimum residence time of 0.5 seconds and a minimum temperature of 760 °C, the design evaluation must document that these conditions exist.

(ii) For a combustion control device that does not satisfy the criteria in paragraph (a)(1)(i) of this section, the design evaluation must document control efficiency and address the following characteristics, depending on the type of control device:

(A) For a thermal vapor incinerator, the design evaluation must consider the autoignition temperature of the organic HAP, must consider the vent stream flow rate, and must establish the design minimum and average temperature in the combustion zone and the combustion zone residence time.

(B) For a catalytic vapor incinerator, the design evaluation must consider the vent stream flow rate and must establish the design minimum and average temperatures across the catalyst bed inlet and outlet.

(C) For a boiler or process heater, the design evaluation must consider the vent stream flow rate, must establish the design minimum and average flame zone temperatures and combustion zone residence time, and must describe the method and location where the vent stream is introduced into the flame zone.

(iii) For a condenser, the design evaluation must consider the vent stream flow rate, relative humidity, and temperature, and must establish the design outlet organic HAP compound concentration level, design average temperature of the condenser exhaust vent stream, and the design average temperatures of the coolant fluid at the condenser inlet and outlet. The temperature of the gas stream exiting the condenser must be measured and used to establish the outlet organic HAP concentration.

(iv) For a carbon adsorption system that regenerates the carbon bed directly onsite in the control device such as a fixed-bed adsorber, the design evaluation must consider the vent stream flow rate, relative humidity, and temperature, and must establish the design exhaust vent stream organic compound concentration level, adsorption cycle time, number of carbon beds and their capacities, type and working capacity of activated carbon used for the carbon beds, design total regeneration stream mass or volumetric flow over the period of each complete carbon bed regeneration cycle, design carbon bed temperature after regeneration, design carbon bed regeneration time, and design service life of carbon. For vacuum desorption, the pressure drop must be included.

(v) For a carbon adsorption system that does not regenerate the carbon bed directly onsite in the control device such as a carbon canister, the design evaluation must consider the vent stream mass or volumetric flow rate, relative humidity, and temperature, and must establish the design exhaust vent stream organic compound concentration level, capacity of the carbon bed, type and working capacity of activated carbon used for the carbon bed, and design carbon replacement interval based on the total carbon working capacity of the control device and source operating schedule.

(vi) For a scrubber, the design evaluation must consider the vent stream composition, constituent concentrations, liquid-to-vapor ratio, scrubbing liquid flow rate and concentration, temperature, and the reaction kinetics of the constituents with the scrubbing liquid. The design evaluation must establish the design exhaust vent stream organic compound concentration level and must include the additional information in paragraphs (a)(1)(vi)(A) and (B) of this section for trays and a packed column scrubber.

(A) Type and total number of theoretical and actual trays;

(B) Type and total surface area of packing for entire column, and for individual packed sections if column contains more than one packed section.

(vii) For fabric filters, the design evaluation must include the pressure drop through the device and the net gas-to-cloth ratio (i.e., cubic feet of gas per square feet of cloth).

(2) *Calculation of TOC or total organic HAP concentration.* The TOC concentration or total organic HAP concentration is the sum of the concentrations of the individual components. If compliance is being determined based on TOC, the owner or operator shall compute TOC for each run using Equation 6 of this subpart. If compliance with the percent reduction format of the standard is being

determined based on total organic HAP, the owner or operator shall compute total organic HAP using Equation 6 of this subpart, except that only organic HAP compounds shall be summed: when determining compliance with the wastewater provisions of § 63.1363(d), the organic HAP compounds shall consist of the organic HAP compounds in Table 9 of subpart G of this part.

$$CG_T = \frac{1}{m}\sum_{j=1}^{m}\left(\sum_{i=1}^{n} CGS_{i,j}\right) \qquad \text{(Eq. 6)}$$

Where:

CG_T = total concentration of TOC in vented gas stream, average of samples, dry basis, ppmv

$CGS_{i,j}$ = concentration of sample components in vented gas stream for sample j, dry basis, ppmv

n = number of compounds in the sample

m = number of samples in the sample run

(3) *Initial compliance using flares.* When a flare is used to comply with the standards, the owner or operator shall comply with the provisions in § 63.11(b) of subpart A of this part.

(i) The initial compliance determination shall consist of a visible emissions determination using Method 22 of 40 CFR part 60, appendix A, as described in § 63.11(b)(4) of subpart A of this part, and a determination of net heating value of gas being combusted and exit velocity to comply with the requirements of § 63.11(b)(6) through (8) of subpart A of this part. The net heating value and exit velocity shall be based on the results of performance testing under the conditions described in paragraphs (b)(10) and (11) of this section.

(ii) An owner or operator is not required to conduct a performance test to determine percent emission reduction or outlet organic HAP or TOC concentration when a flare is used.

(4) *Exemptions from compliance demonstrations.* An owner or operator using any control device specified in paragraphs (a)(4)(i) through (ii) of this section is exempt from the initial compliance provisions in paragraphs (c), (d), and (e) of this section.

(i) A boiler or process heater with a design heat input capacity of 44 megawatts or greater.

(ii) A boiler or process heater into which the emission stream is introduced with the primary fuel.

(5) *Initial compliance with alternative standard.* Initial compliance with the alternative standards in § 63.1362(b)(6) and (c)(4) is demonstrated when the outlet TOC concentration is 20 ppmv or less, and the outlet HCl and chlorine concentration is 20 ppmv or less. To demonstrate initial compliance, the owner or operator shall be in compliance with the monitoring provisions in § 63.1366(b)(5) on the initial compliance date. The owner or operator shall use Method 18 of 40 CFR part 60, appendix A to determine the predominant organic HAP in the emission stream if the TOC monitor is calibrated on the predominant HAP.

(6) *Initial compliance with the 20 ppmv outlet limit.* Initial compliance with the 20 ppmv TOC and HCl and chlorine concentration is demonstrated when the outlet TOC concentration is 20 ppmv or less, and the outlet HCl and chlorine concentration is 20 ppmv or less. To demonstrate initial compliance, the operator shall use applicable test methods described in paragraphs (b)(1) through (9) of this section, and test under conditions described in paragraphs (b)(10) or (11) of this section, as applicable. The owner or operator shall comply with the monitoring provisions in § 63.1366(b)(1) through (5) on the initial compliance date.

(7) *Outlet concentration correction for supplemental gases.* If supplemental gases are added to a vent stream for which compliance with an outlet concentration standard in § 63.1362 or 63.1363 will be demonstrated, the owner or operator must correct the outlet concentration as specified in paragraphs (a)(7)(i) and (ii) of this section.

(i) *Combustion device.* If the vent stream is controlled with a combustion device, the owner or operator must comply with the provisions in paragraphs (a)(7)(i)(A) through (C) of this section.

(A) To comply with a TOC outlet concentration standard in § 63.1362(b)(2)(iv)(A), (b)(4)(ii)(A), (b)(6), (c)(2)(iv)(B), (c)(4), (d)(13), or § 63.172 of subpart H of this part, the actual TOC outlet concentration must be corrected to 3 percent oxygen.

(B) If the inlet stream to the combustion device contains any HCl, chlorine, or halogenated compounds, and the owner or operator elects to comply with a total HCl and chlorine outlet concentration standard in § 63.1362(b)(3)(ii), (b)(5)(ii), (b)(5)(iii), (b)(6), or (c)(4), the actual total HCl and chlorine outlet concentration must be corrected to 3 percent oxygen.

(C) The integrated sampling and analysis procedures of Method 3B of 40 CFR part 60, appendix A shall be used to determine the actual oxygen concentration ($\%O_{2d}$). The samples shall be taken during the same time that the TOC and HCl and chlorine samples are taken. The concentration corrected to 3 percent oxygen (C_d) shall be computed using Equation 7 of this subpart:

$$C_c = C_m\left(\frac{17.9}{20.9 - \%O_{2d}}\right) \qquad \text{(Eq. 7)}$$

Where:

C_c = concentration of TOC or total HCl and chlorine corrected to 3 percent oxygen, dry basis, ppmv

C_m = total concentration of TOC or total HCl and chlorine in the vented gas stream, average of samples, dry basis, ppmv

$\%O_{2d}$ = concentration of oxygen measured in vented gas stream, dry basis, percent by volume

(ii) *Noncombustion devices.* If a control device other than a combustion device, and not in series with a combustion device, is used to comply with a TOC or total HCl and chlorine outlet concentration standard, the owner or operator must correct the actual concentration for supplemental gases using Equation 8 of this subpart.

$$C_a = C_m\left(\frac{V_s + V_a}{V_a}\right) \qquad \text{(Eq. 8)}$$

Where:

C_a = corrected outlet TOC or total HCl and chlorine concentration, dry basis, ppmv

C_m = actual TOC or total HCl and chlorine concentration measured at control device outlet, dry basis, ppmv

V_a = total volumetric flow rate of affected streams vented to the control device

V_s = total volumetric flow rate of supplemental gases

(b) *Test methods and conditions.* When testing is conducted to measure emissions from an affected source, the test methods specified in paragraphs (b)(1) through (9) of this section shall be used. Compliance tests shall be performed under conditions specified in paragraphs (b)(10) and (11) of this section. Testing requirements for condensers are specified in paragraph (b)(12) of this section.

(1) Method 1 or 1A of appendix A of 40 CFR part 60 shall be used for sample and velocity traverses.

(2) Method 2, 2A, 2C, or 2D of appendix A of 40 CFR part 60 shall be used for velocity and volumetric flow rates.

(3) Method 3 of appendix A of 40 CFR part 60 shall be used for gas analysis.

(4) Method 4 of appendix A of 40 CFR part 60 shall be used for stack gas moisture.

(5) Concentration measurements shall be adjusted to negate the dilution effects

of introducing nonaffected gaseous streams into the vent streams prior to control or measurement. The following methods are specified for concentration measurements of organic compounds:

(i) Method 18 of appendix A of 40 CFR part 60 may be used to determine HAP concentration in any control device efficiency determination.

(ii) Method 25 of appendix A of 40 CFR part 60 may be used to determine total gaseous nonmethane organic concentration for control efficiency determinations in combustion devices.

(iii) Method 25A of appendix A of 40 CFR part 60 may be used to determine the HAP or TOC concentration for control device efficiency determinations under the conditions specified in Method 25 of appendix A of 40 CFR part 60 for direct measurement of an effluent with a flame ionization detector, or in demonstrating compliance with the 20 ppmv TOC outlet standard. If Method 25A of appendix A of 40 CFR part 60 is used to determine the concentration of TOC for the 20 ppmv standard, the instrument shall be calibrated on methane or the predominant HAP. If calibrating on the predominant HAP, the use of Method 25A of appendix A of 40 CFR part 60 shall comply with paragraphs (b)(5)(i)(A) through (C) of this section.

(A) The organic HAP used as the calibration gas for Method 25A, 40 CFR part 60, appendix A, shall be the single organic HAP representing the largest percent by volume.

(B) The use of Method 25A, 40 CFR part 60, appendix A, is acceptable if the response from the high level calibration gas is at least 20 times the standard deviation of the response from the zero calibration gas when the instrument is zeroed on the most sensitive scale.

(C) The span value of the analyzer must be less than 100 ppmv.

(6) The methods in either paragraph (b)(6)(i) or (ii) of this section shall be used to determine the concentration, in mg/dscm, of total HCl and chlorine. Concentration measurements shall be adjusted to negate the dilution effects of introducing nonaffected gaseous streams into the vent streams prior to control or measurement.

(i) Method 26 or 26A of 40 CFR part 60, appendix A.

(ii) Any other method if the method or data have been validated according to the applicable procedures of Method 301 of appendix A of this part.

(7) Method 5 of appendix A of 40 CFR part 60 shall be used to determine the concentration of particulate matter in exhaust gas streams from bag dumps and product dryers.

(8) Wastewater analysis shall be conducted in accordance with § 63.144(b)(5)(i) through (iii) of subpart G of this part.

(9) Method 22 of appendix A of 40 CFR part 60 shall be used to determine visible emissions from flares.

(10) *Testing conditions for continuous processes.* Testing of process vents on equipment operating as part of a continuous process shall consist of three one-hour runs. Gas stream volumetric flow rates shall be measured every 15 minutes during each 1-hour run. Organic HAP concentration shall be determined from samples collected in an integrated sample over the duration of each one-hour test run, or from grab samples collected simultaneously with the flow rate measurements (every 15 minutes). If an integrated sample is collected for laboratory analysis, the sampling rate shall be adjusted proportionally to reflect variations in flow rate. For continuous gas streams, the emission rate used to determine compliance shall be the average emission rate of the three test runs.

(11) *Testing conditions for batch processes.* Except as provided in paragraph (b)(12) of this section for condensers, testing of emissions on equipment where the flow of gaseous emissions is intermittent (batch operations) shall be conducted at absolute peak-case conditions or hypothetical peak-case conditions, as specified in paragraphs (b)(11)(i) and (ii) of this section, respectively. Gas stream volumetric flow rates shall be measured at 15-minute intervals. Organic HAP, TOC, or HCl and chlorine concentration shall be determined from samples collected in an integrated sample over the duration of the test, or from grab samples collected simultaneously with the flow rate measurements (every 15 minutes). If an integrated sample is collected for laboratory analysis, the sampling rate shall be adjusted proportionally to reflect variations in flow rate. In all cases, a site-specific test plan shall be submitted to the Administrator for approval prior to testing in accordance with § 63.7(c) of subpart A of this part. The test plan shall include the emissions profile described in paragraph (b)(11)(iii) of this section. The term "HAP mass loading" as used in paragraphs (b)(11)(i) through (iii) of this section refers to the class of HAP, either organic or HCl and chlorine, that the control device is intended to control.

(i) *Absolute peak-case.* If the most challenging conditions for the control device occur under maximum HAP load, the absolute peak-case conditions shall be characterized by the criteria presented in paragraph (b)(11)(i)(A) or (B) of this section. Otherwise, absolute peak-case conditions are defined by the conditions in paragraph (b)(11)(i)(C) of this section.

(A) The period in which the inlet to the control device will contain at least 50 percent of the maximum HAP mass load that may be vented to the control device over any 8-hour period. An emission profile as described in paragraph (b)(11)(iii)(A) of this section shall be used to identify the 8-hour period that includes the maximum projected HAP load.

(B) A 1-hour period of time in which the inlet to the control device will contain the highest hourly HAP mass loading rate that may be vented to the control device. An emission profile as described in paragraph (b)(11)(iii)(A) of this section shall be used to identify the 1-hour period of maximum HAP loading.

(C) The period of time when a condition other than the maximum HAP load is most challenging for the control device. These conditions include, but are not limited to the following:

(*1*) Periods when the streams contain the highest combined VOC and HAP hourly load, as described by the emission profiles in paragraph (b)(11)(iii) of this section; or

(*2*) Periods when the streams contain HAP constituents that approach the limits of solubility for scrubbing media; or

(*3*) Periods when the streams contain HAP constituents that approach the limits of adsorptivity for carbon adsorption systems.

(ii) *Hypothetical peak-case.* Hypothetical peak-case conditions are simulated test conditions that, at a minimum, contain the highest total average hourly HAP load of emissions that would be predicted to be vented to the control device from the emissions profile described in either paragraph (b)(11)(iii)(B) or (C) of this section.

(iii) *Emissions profile.* The owner or operator may choose to perform tests only during those periods of the peak-case episode(s) that the owner or operator selects to control as part of achieving the required emission reduction. The owner or operator shall develop an emission profile for the vent to the control device that describes the characteristics of the vent stream at the inlet to the control device under either absolute or hypothetical peak-case conditions. The emissions profile shall be developed based on the applicable procedures described in paragraphs (b)(11)(iii)(A) through (C) of this section, as required by paragraphs (b)(11)(i) and (ii) of this section.

(A) *Emissions profile by process.* The emissions profile must consider all emission episodes that could contribute to the vent stack for a period of time that is sufficient to include all processes venting to the stack and shall consider production scheduling. The profile shall describe the HAP load to the device that equals the highest sum of emissions from the episodes that can vent to the control device during the period of absolute peak-case conditions specified in paragraph (b)(11)(i)(A), (B), or (C) as appropriate. Emissions per episode shall be calculated using the procedures specified in paragraph (c)(2) of this section. When complying with paragraph (b)(1)(i)(B) of this section, emissions per episode shall be divided by the duration of the episode if the duration of the episode is longer than 1 hour.

(B) *Emission profile by equipment.* The emission profile must consist of emissions that meet or exceed the highest hourly HAP load that would be expected under actual processing conditions. The profile shall describe equipment configurations used to generate the emission events, volatility of materials processed in the equipment, and the rationale used to identify and characterize the emission events. The emissions may be based on using a compound more volatile than compounds actually used in the process(es), and the emissions may be generated from all equipment in the process(es) or only selected equipment.

(C) *Emission profile by capture and control device limitation.* The emission profile shall consider the capture and control system limitations and the highest hourly emissions that can be routed to the control device, based on maximum flow rate and concentrations possible because of limitations on conveyance and control equipment (e.g., fans, LEL alarms and safety bypasses).

(iv) *Test duration.* Three runs, at a minimum of 1 hour each, are required for performance testing. Each run must occur over the same absolute or hypothetical peak-case conditions, as defined in paragraph (b)(11)(i) or (ii) of this section.

(12) *Testing requirements for condensers.* For emission streams controlled using condensers, the owner or operator shall calculate the condenser outlet gas temperature that is needed to meet the required percent reduction.

(c) *Initial compliance with process vent provisions.* The owner or operator of an affected source shall demonstrate compliance with the process vent standards in § 63.1362(b) using the procedures described in paragraphs (c)(1) through (3) of this section.

(1) Compliance with the process vent standards in § 63.1362(b) shall be demonstrated in accordance with the provisions specified in paragraphs (c)(1)(i) through (viii) of this section.

(i) Initial compliance with the emission limit cutoffs in § 63.1362(b)(2)(i) and (b)(4)(i) is demonstrated when the uncontrolled organic HAP emissions from the sum of all process vents within a process are less than or equal to 0.15 Mg/yr. Uncontrolled HAP emissions shall be determined using the procedures described in paragraph (c)(2) of this section.

(ii) Initial compliance with the emission limit cutoffs in § 63.1362(b)(3)(i) and (b)(5)(i) is demonstrated when the uncontrolled HCl and Cl_2 emissions from the sum of all process vents within a process are less than or equal to 6.8 Mg/yr. Initial compliance with the emission limit cutoffs in § 63.1362(b)(5)(ii) and (iii) is demonstrated when the uncontrolled HCl and Cl_2 emissions are greater than or equal to 6.8 Mg/yr or greater than or equal to 191 Mg/yr, respectively. Uncontrolled emissions shall be determined using the procedures described in paragraph (c)(2) of this section.

(iii) Initial compliance with the organic HAP percent reduction requirements specified in § 63.1362(b)(2)(ii), (b)(2)(iii), and (b)(4)(ii) is demonstrated by determining controlled HAP emissions using the procedures described in paragraph (c)(3) of this section, determining uncontrolled HAP emissions using the procedures described in paragraph (c)(2) of this section, and calculating the applicable percent reduction.

(iv) Initial compliance with the HCl and Cl_2 percent reduction requirements specified in § 63.1362(b)(3)(ii), (b)(5)(ii), and (b)(5)(iii) is demonstrated by determining controlled emissions of HCl and Cl_2 using the procedures described in paragraph (c)(3) of this section, determining uncontrolled emissions of HCl and Cl_2 using the procedures described in paragraph (c)(2) of this section, and calculating the applicable percent reduction.

(v) Initial compliance with the outlet concentration limits in § 63.1362(b)(2)(iv)(A), (b)(3)(ii), (b)(4)(ii)(A), (b)(5)(ii), and (b)(5)(iii) is demonstrated when the outlet TOC concentration is 20 ppmv or less and the outlet HCl and chlorine concentration is 20 ppmv or less. The owner or operator shall demonstrate compliance by fulfilling the requirements in paragraph (a)(6) of this section. If an owner or operator elects to develop an emissions profile by process as described in paragraph (b)(11)(iii)(A) of this section, uncontrolled emissions shall be determined using the procedures in paragraph (c)(2) of this section.

(vi) Initial compliance with the alternative standard in § 63.1362(b)(6) is demonstrated by fulfilling the requirements in paragraph (a)(5) of this section.

(vii) Initial compliance when using a flare is demonstrated by fulfilling the requirements in paragraph (a)(3) of this section.

(viii) No initial compliance demonstration is required for control devices specified in § 63.1362(l).

(2) *Uncontrolled emissions.* The owner or operator referred to from paragraphs (c)(1)(i) through (v) of this section shall calculate uncontrolled emissions according to the procedures described in paragraph (c)(2)(i) or (ii) of this section, as appropriate.

(i) *Emission estimation procedures.* The owner or operator shall determine uncontrolled HAP emissions using emission measurements and/or calculations for each batch emission episode according to the engineering evaluation methodology in paragraphs (c)(2)(i)(A) through (H) of this section.

(A) Individual HAP partial pressures in multicomponent systems shall be determined in accordance with the methods specified in paragraphs (c)(2)(i)(A)*(1)* through *(3)* of this section. Chemical property data may be obtained from standard references.

(1) If the components are miscible in one another, use Raoult's law to calculate the partial pressures;

(2) If the solution is a dilute aqueous mixture, use Henry's law constants to calculate partial pressures;

(3) If Raoult's law or Henry's law are not appropriate or available, use any of the methods specified in paragraphs (c)(2)(i)(A)*(3)(i)* through *(iii)* of this section.

(i) Use experimentally obtained activity coefficients;

(ii) Use models such as the group-contribution models to predict activity coefficients;

(iii) Assume the components of the system behave independently and use the summation of all vapor pressures from the HAP as the total HAP partial pressure;

(B) *Charging or filling.* Emissions from vapor displacement due to transfer of material to a vessel shall be calculated using Equation 9 of this subpart:

$$E = \frac{(V)}{(R)(T)} \times \sum_{i=1}^{n} (P_i)(MW_i) \qquad \text{(Eq. 9)}$$

Where:

E = mass of HAP emitted
P_i = partial pressure of the individual HAP
V = volume of gas displaced from the vessel
R = ideal gas law constant
T = temperature of the vessel vapor space; absolute
MW_i = molecular weight of the individual HAP

(C) *Purging.* Emissions from purging shall be calculated using Equation 10 of this subpart, except that for purge flow rates greater than 100 scfm, the mole fraction of HAP will be assumed to be 25 percent of the saturated value.

$$E = \sum_{i=1}^{n} P_i MW_i \times \frac{(V)(t)}{(R)(T)} \times \frac{P_T}{P_T - \sum_{j=1}^{m}(P_j)} \qquad \text{(Eq. 10)}$$

Where:
E = mass of HAP emitted
V = purge flow rate at the temperature and pressure of the vessel vapor space
R = ideal gas law constant
T = temperature of the vessel vapor space; absolute
P_i = partial pressure of the individual HAP
P_j = partial pressure of individual condensable VOC compounds (including HAP)
P_T = pressure of the vessel vapor space
MW_i = molecular weight of the individual HAP
t = time of purge
n = number of HAP compounds in the emission stream
m = number of condensable VOC compounds (including HAP) in the emission stream

(D) *Heating.* Emissions caused by heating the contents of a vessel to a temperature less than the boiling point shall be calculated using the procedures in either paragraph (c)(2)(i)(D)(*1*), (*2*), or (*4*) of this section, as appropriate. If the contents of a vessel are heated to the boiling point, emissions while boiling are assumed to be zero if the owner or operator is complying with the provisions in paragraph (d)(2)(i)(C)(*3*) of this section.

(*1*) If the final temperature to which the vessel contents are heated is lower than 50 K below the boiling point of the HAP in the vessel, then emissions shall be calculated using Equations 11 through 14 of this subpart.

(*i*) The mass of HAP emitted per episode shall be calculated using Equation 11 of this subpart:

$$E = \frac{\dfrac{\sum_{i=1}^{n}(P_i)_{T1}}{Pa_1} + \dfrac{\sum_{i=1}^{n}(P_i)_{T2}}{Pa_2}}{2} \times \Delta\eta \times MW_{HAP} \qquad \text{(Eq. 11)}$$

Where:
E = mass of HAP vapor displaced from the vessel being heated
$(P_i)_{Tn}$ = partial pressure of each HAP in the vessel headspace at initial (n = 1) and final (n = 2) temperatures
Pa_1 = initial noncondensable gas pressure in the vessel, as calculated using Equation 13 of this subpart
Pa_2 = final noncondensable gas pressure in the vessel, as calculated using Equation 13 of this subpart
$\Delta\eta$ = number of moles of noncondensable gas displaced, as calculated using Equation 12 of this subpart
MW_{HAP} = The average molecular weight of HAP present in the vessel, as calculated using Equation 14 of this subpart:
n = number of HAP compounds in the displaced vapor

(*ii*) The moles of noncondensable gas displaced shall be calculated using Equation 12 of this subpart:

$$\Delta\eta = \frac{V}{R}\left[\left(\frac{Pa_1}{T_1}\right) - \left(\frac{Pa_2}{T_2}\right)\right] \qquad \text{(Eq. 12)}$$

where:
$\Delta\eta$ = number of moles of noncondensable gas displaced
V = volume of free space in the vessel
R = ideal gas law constant
Pa_1 = initial noncondensable gas pressure in the vessel, as calculated using Equation 13 of this subpart
Pa_2 = final noncondensable gas pressure in the vessel, as calculated using Equation 13 of this subpart
T_1 = initial temperature of vessel contents, absolute
T_2 = final temperature of vessel contents, absolute

(*iii*) The initial and final pressure of the noncondensable gas in the vessel shall be calculated according to Equation 13 of this subpart:

$$Pa_n = Pa_{atm} - \sum_{j=1}^{m}(P_j)_{Tn} \qquad \text{(Eq. 13)}$$

Where:
Pa_n = partial pressure of noncondensable gas in the vessel headspace at initial (n = 1) and final (n = 2) temperatures
P_{atm} = atmospheric pressure
$(P_j)_{Tn}$ = partial pressure of each condensable volatile organic compound (including HAP) in the vessel headspace at the initial temperature (n = 1) and final (n = 2) temperature

(*iv*) The average molecular weight of HAP in the displaced gas shall be calculated using Equation 14 of this subpart:

$$MW_{HAP} = \sum_{i=1}^{n} \frac{\left((P_i)_{T_1} + (P_i)_{T_2}\right) MW_i}{\sum_{i=1}^{n}\left((P_i)_{T_1} + (P_i)_{T_2}\right)} \quad \text{(Eq. 14)}$$

Where:

MW_{HAP} = average molecular weight of HAP in the displaced gas

$(P_i)_{Tn}$ = partial pressure of each HAP in the vessel headspace at the initial (T_1) and final (T_2) temperatures

MW_i = molecular weight of each HAP

n = number of HAP compounds in the emission stream

(*2*) If the vessel contents are heated to a temperature greater than 50 K below the boiling point, then emissions from the heating of a vessel shall be calculated as the sum of the emissions calculated in accordance with paragraphs (c)(2)(i)(D)(*2*)(*i*) and (*ii*) of this section.

(*i*) For the interval from the initial temperature to the temperature 50 K below the boiling point, emissions shall be calculated using Equation 11 of this subpart, where T_2 is the temperature 50 K below the boiling point.

(*ii*) For the interval from the temperature 50 K below the boiling point to the final temperature, emissions shall be calculated as the summation of emissions for each 5 K increment, where the emission for each increment shall be calculated using Equation 11 of this subpart. If the final temperature of the heatup is lower than 5 K below the boiling point, the final temperature for the last increment shall be the final temperature of the heatup, even if the last increment is less than 5 K. If the final temperature of the heatup is higher than 5 K below the boiling point, the final temperature for the last increment shall be the temperature 5 K below the boiling point, even if the last increment is less than 5 K.

(*3*) While boiling, the vessel must be operated with a properly operated process condenser. An initial demonstration that a process condenser is properly operated is required for vessels that operate process condensers without secondary condensers that are air pollution control devices. The owner or operator must either measure the condenser exhaust gas temperature and show it is less than the boiling point of the substance(s) in the vessel, or perform a material balance around the vessel and condenser to show that at least 99 percent of the material vaporized while boiling is condensed. Uncontrolled emissions are assumed to be zero under these conditions. The initial demonstration shall be conducted for all appropriate operating scenarios and documented in the Notification of Compliance Status report as specified in § 63.1368(f).

(*4*)(*i*) As an alternative to the procedures described in paragraphs (c)(2)(i)(D)(*1*) and (*2*) of this section, emissions caused by heating a vessel to any temperature less than the boiling point may be calculated using Equation 15 of this subpart.

$$E = MW_{HAP} \times \left(N_{avg} \times \ln\left(\frac{P_T - \sum_{j=1}^{m}(P_{j,1})}{P_T - \sum_{j=1}^{m}(P_{j,2})} \right) - \left(n_{HAP,2} - n_{HAP,1}\right) \right) \quad \text{(Eq. 15)}$$

Where:

E = mass of HAP vapor displaced from the vessel being heated

N_{avg} = average gas space molar volume during the heating process, as calculated using Equation 16 of this subpart

P_T = total pressure in the vessel

$P_{i,1}$ = partial pressure of the individual HAP compounds at T_1

$P_{i,2}$ = partial pressure of the individual HAP compounds at T_2

MW_{HAP} = average molecular weight of the HAP compounds, as calculated using Equation 14 of this subpart

$n_{HAP,1}$ = number of moles of total HAP in the vessel headspace at T_1

$n_{HAP,2}$ = number of moles of total HAP in the vessel headspace at T_2

m = number of condensable VOC compounds (including HAP) in the emission stream

(*ii*) The average gas space molar volume during the heating process is calculated using Equation 16 of this subpart.

$$N_{avg} = \frac{VP_T}{2R}\left(\frac{1}{T_1} + \frac{1}{T_2}\right) \quad \text{(Eq. 16)}$$

Where:

N_{avg} = average gas space molar volume during the heating process

V = volume of free space in vessel

P_T = total pressure in the vessel

R = ideal gas law constant

T_1 = initial temperature of the vessel contents, absolute

T_2 = final temperature of the vessel contents, absolute

(*iii*) The difference in the number of moles of total HAP in the vessel headspace between the initial and final temperatures is calculated using Equation 17 of this subpart.

$$\left(n_{HAP,2} - n_{HAP,1}\right) = \frac{V}{(R)(T_2)}\sum_{i=1}^{n} P_{i,2} - \frac{V}{(R)(T_1)}\sum_{i=1}^{n} P_{i,1} \quad \text{(Eq. 17)}$$

Where:

$n_{HAP,2}$ = number of moles of total HAP in the vessel headspace at T_2

$_{HAP,1}$ = number of moles of total HAP in the vessel headspace at T_1

V = volume of free space in vessel

R = ideal gas law constant

T_1 = initial temperature of the vessel contents, absolute

T_2 = final temperature of the vessel contents, absolute

$P_{i,1}$ = partial pressure of the individual HAP compounds at T_1

$P_{i,2}$=partial pressure of the individual HAP compounds at T_2

n=number of HAP compounds in the emission stream

(E) *Depressurization.* Emissions from depressurization shall be calculated using the procedures in paragraphs (c)(2)(i)(E)(*1*) through (*5*) of this section. Alternatively, the owner or operator may elect to calculate emissions from depressurization using the procedures in paragraph (c)(2)(i)(E)(*6*) of this section.

(*1*) The moles of HAP vapor initially in the vessel are calculated using Equation 18 of this subpart:

$$n_{HAP} = \frac{V}{R\,T} \times \sum_{i=1}^{n} (P_i) \qquad \text{(Eq. 18)}$$

Where:

n_{HAP}=moles of HAP vapor in the vessel

P_i=partial pressure of each HAP in the vessel vapor space

V=free volume in the vessel being depressurized

R=ideal gas law constant

T=absolute temperature in vessel

n=number of HAP compounds in the emission stream

(*2*) The initial and final moles of noncondensable gas present in the vessel are calculated using Equations 19 and 20 of this subpart:

$$n_1 = \frac{VP_{nc_1}}{RT} \qquad \text{(Eq. 19)}$$

$$n_2 = \frac{VP_{nc_2}}{RT} \qquad \text{(Eq. 20)}$$

Where:

n_1=initial number of moles of noncondensable gas in the vessel

n_2=final number of moles of noncondensable gas in the vessel

V=free volume in the vessel being depressurized

P_{nc1}=initial partial pressure of the noncondensable gas, as calculated using Equation 21 of this subpart

P_{nc2}=final partial pressure of the noncondensable gas, as calculated using Equation 22 of this subpart

R=ideal gas law constant

T=temperature, absolute

(*3*) The initial and final partial pressures of the noncondensable gas in the vessel are determined using Equations 21 and 22 of this subpart.

$$P_{nc1} = P_1 - \sum_{j=1}^{m} (P_j{}^*)(X_j) \qquad \text{(Eq. 21)}$$

$$P_{nc2} = P_2 - \sum_{j=1}^{m} (P_j{}^*)(x_j) \qquad \text{(Eq. 22)}$$

where:

P_{nc1}=initial partial pressure of the noncondensable gas

P_{nc2}=final partial pressure of the noncondensable gas

P_1 = initial vessel pressure

P_2=final vessel pressure

$P_j{}^*$=vapor pressure of each condensable VOC (including HAP) in the emission stream

X_j=mole fraction of each condensable VOC (including HAP) in the emission stream

m=number of condensable VOC compounds (including HAP) in the emission stream

(*4*) The moles of HAP emitted during the depressurization are calculated by taking an approximation of the average ratio of moles of HAP to moles of noncondensable and multiplying by the total moles of noncondensables released during the depressurization, using Equation 23 of this subpart:

Where:

$n_{HAP,e}$=moles of HAP emitted

$$n_{HAP,e} = \frac{\left(\frac{n_{HAP,1}}{n_1} + \frac{n_{HAP,2}}{n_2}\right)}{2}\left[n_1 - n_2\right] \qquad \text{(Eq. 23)}$$

$n_{HAP,1}$=moles of HAP vapor in vessel at the initial pressure, as calculated using Equation 18 of this subpart

$n_{HAP,2}$=moles of HAP vapor in vessel at the final pressure, as calculated using Equation 18 of this subpart

n_1=initial number of moles of noncondensable gas in the vessel, as calculated using Equation 19 of this subpart

n_2=final number of moles of noncondensable gas in the vessel, as calculated using Equation 19 of this subpart

(*5*) Use Equation 24 of this subpart to calculate the mass of HAP emitted:

$$E = n_{HAP,e} * MW_{HAP} \qquad \text{(Eq. 24)}$$

Where:

E=mass of HAP emitted

$n_{HAP,e}$=moles of HAP emitted, as calculated using Equation 23 of this subpart

MW_{HAP}=average molecular weight of the HAP as calculated using Equation 14 of this subpart

(*6*) As an alternative to the procedures in paragraphs (c)(2)(i)(E)(1) through (5) of this section, emissions from depressurization may be calculated using Equation 25 of this subpart:

$$E = \frac{V}{(R)\,(T)} \times \ln\left(\frac{P_1 - \sum_{j=1}^{m}(P_j)}{P_2 - \sum_{j=1}^{m}(P_j)}\right) \times \sum_{i=1}^{n}(P_i)\,(MW_i) \qquad \text{(Eq. 25)}$$

where:

V=free volume in vessel being depressurized

R=ideal gas law constant

T=temperature of the vessel, absolute

P_1=initial pressure in the vessel

P_2=final pressure in the vessel

P_i=partial pressure of the individual HAP compounds

P_i=partial pressure of individual condensable VOC compounds (including HAP)
MW_i=molecular weight of the individual HAP compounds
n=number of HAP compounds in the emission stream
m=number of condensable VOC compounds (including HAP) in the emission stream

(F) *Vacuum systems.* Calculate emissions from vacuum systems using Equation 26 of this subpart:

$$E = \frac{(MWs)(La)(t)}{MW_{nc}} \left(\frac{\sum_{i=1}^{n} P_i}{P_T - \sum_{j=1}^{m} P_j} \right) \quad \text{(Eq. 26)}$$

Where:
E=mass of HAP emitted
P_T=absolute pressure of receiving vessel or ejector outlet conditions, if there is no receiver
P_i=partial pressure of individual HAP at the receiver temperature or the ejector outlet conditions
P_j=partial pressure of individual condensable VOC compounds (including HAP) at the receiver temperature or the ejector outlet conditions
L_a=total air leak rate in the system, mass/time
MW_{nc} = molecular weight of noncondensable gas
t=time of vacuum operation
MW_{HAP}=average molecular weight of HAP in the emission stream, as calculated using Equation 14 of this subpart, with HAP partial pressures calculated at the temperature of the receiver or ejector outlet, as appropriate
n=number of HAP components in the emission stream
m=number of condensable VOC compounds (including HAP) in the emission stream

(G) *Gas evolution.* Emissions from gas evolution shall be calculated using Equation 10 of this subpart with V calculated using Equation 27 of this subpart:

$$V = \frac{(W_g)(R)(T)}{(P_T)(MW_g)} \quad \text{(Eq. 27)}$$

Where:
V=volumetric flow rate of gas evolution
W_g=mass flow rate of gas evolution
R=ideal gas law constant
T=temperature at the exit, absolute
P_T=vessel pressure
MW_g=molecular weight of the evolved gas

(H) *Air drying.* Use Equation 28 of this subpart to calculate emissions from air drying:

$$E = B \times \left(\frac{PS_1}{100 - PS_1} - \frac{PS_2}{100 - PS_2} \right) \quad \text{(Eq. 28)}$$

Where:
E=mass of HAP emitted
B=mass of dry solids
PS_1=HAP in material entering dryer, weight percent
PS_2=HAP in material exiting dryer, weight percent.

(ii) *Engineering assessments.* The owner or operator shall conduct an engineering assessment to determine uncontrolled HAP emissions for each emission episode that is not due to vapor displacement, purging, heating, depressurization, vacuum systems, gas evolution, or air drying. For a given emission episode caused by any of these seven types of activities, the owner or operator also may request approval to determine uncontrolled HAP emissions based on an engineering assessment. All data, assumptions, and procedures used in the engineering assessment shall be documented in the Precompliance plan in accordance with § 63.1367(b). An engineering assessment includes, but is not limited to, the information and procedures described in paragraphs (c)(2)(ii)(A) through (D) of this section:

(A) Test results, provided the tests are representative of current operating practices at the process unit. If test data show a greater than 20 percent discrepancy between the test value and the estimated value, the owner or operator may estimate emissions based on the test data, and the results of the engineering assessment shall be included in the Notification of Compliance Status report.

(B) Bench-scale or pilot-scale test data representative of the process under representative operating conditions.

(C) Maximum flow rate, HAP emission rate, concentration, or other relevant parameter specified or implied within a permit limit applicable to the process vent.

(D) Design analysis based on accepted chemical engineering principles, measurable process parameters, or physical or chemical laws or properties. Examples of analytical methods include, but are not limited to:

(*1*) Use of material balances based on process stoichiometry to estimate maximum organic HAP concentrations;

(*2*) Estimation of maximum flow rate based on physical equipment design such as pump or blower capacities; and

(*3*) Estimation of HAP concentrations based on saturation conditions.

(3) *Controlled emissions.* Except for condensers, the owner or operator shall determine controlled emissions using the procedures in either paragraph (c)(3)(i) or (ii) of this section, as applicable. For condensers, controlled emissions shall be calculated using the emission estimation equations described in paragraph (c)(3)(iii) of this section. The owner or operator is not required to calculate controlled emissions from devices described in paragraph (a)(4) of this section or from flares for which compliance is demonstrated in accordance with paragraph (a)(3) of this section. If the owner or operator is complying with an outlet concentration standard and the control device uses supplemental gases, the outlet concentrations shall be corrected in accordance with the procedures described in paragraph (a)(7) of this section.

(i) *Small control devices, except condensers.* Controlled emissions for each process vent that is controlled using a small control device, except for a condenser, shall be determined by using the design evaluation described in paragraph (c)(3)(i)(A) of this section, or by conducting a performance test in accordance with paragraph (c)(3)(ii) of this section.

(A) *Design evaluation.* The design evaluation shall include documentation demonstrating that the control device being used achieves the required control efficiency under absolute or hypothetical peak-case conditions, as determined from the emission profile described in paragraph (b)(11)(iii) of this section. The control efficiency determined from this design evaluation shall be applied to uncontrolled emissions to estimate controlled emissions. The documentation must be conducted in accordance with the provisions in paragraph (a)(1) of this section. The design evaluation shall also include the value(s) and basis for the parameter(s) monitored under § 63.1366.

(B) Whenever a small control device becomes a large control device, the owner or operator must comply with the provisions in paragraph (c)(3)(ii) of this section and submit the test report in the next Periodic report.

(ii) *Large control devices, except condensers.* Controlled emissions for each process vent that is controlled using a large control device, except for a condenser, shall be determined by applying the control efficiency of the large control device to the estimated uncontrolled emissions. The control efficiency shall be determined by conducting a performance test on the control device as described in paragraphs (c)(3)(ii)(A) through (C) of this section, or by using the results of a previous performance test as described in paragraph (c)(3)(ii)(D) of this section. If the control device is intended to control only HCl and chlorine, the owner or operator may assume the control efficiency of organic HAP is 0 percent. If the control device is intended to control only organic HAP, the owner or operator may assume the control efficiency for HCl and chlorine is 0 percent.

(A) Except for control devices that are intended to meet outlet TOC or HCl and chlorine concentrations of 20 ppmv, the performance test shall be conducted by performing emission testing on the inlet and outlet of the control device following the test methods and procedures of paragraph (b) of this section. For control devices that meet outlet TOC or HCl and chlorine concentrations of 20 ppmv, the performance testing shall be conducted by performing emission testing on the outlet of the control device following the test methods and procedures of paragraph (b) of this section. Concentrations shall be calculated from the data obtained through emission testing according to the procedures in paragraph (a)(2) of this section.

(B) Performance testing shall be conducted under absolute or hypothetical peak-case conditions, as defined in paragraphs (b)(11)(i) and (ii) of this section.

(C) The owner or operator may elect to conduct more than one performance test on the control device for the purpose of establishing more than one operating condition at which the control device achieves the required control efficiency.

(D) The owner or operator is not required to conduct a performance test for any control device for which a previous performance test was conducted, provided the test was conducted using the same procedures specified in paragraphs (b)(1) through (11) of this section over conditions typical of the absolute or hypothetical peak-case, as defined in paragraphs (b)(11)(i) and (ii) of this section. The results of the previous performance test shall be used to demonstrate compliance.

(iii) *Condensers.* The owner or operator using a condenser as a control device shall determine controlled emissions using exhaust gas temperature measurements and calculations for each batch emission episode according to the engineering methodology in paragraphs (c)(3)(iii)(A) through (G) of this section. Individual HAP partial pressures shall be calculated as specified in paragraph (c)(2)(i) of this section.

(A) Emissions from vapor displacement due to transfer of material to a vessel shall be calculated using Equation 9 of this subpart with T set equal to the temperature of the receiver and the HAP partial pressures determined at the temperature of the receiver.

(B) Emissions from purging shall be calculated using Equation 10 of this subpart with T set equal to the temperature of the receiver and the HAP partial pressures determined at the temperature of the receiver.

(C) Emissions from heating shall be calculated using Equation 29 of this subpart. In Equation 29 of this subpart, $\Delta\eta$ is equal to the number of moles of noncondensable displaced from the vessel, as calculated using Equation 12 of this subpart. In Equation 29 of this subpart, the HAP average molecular weight shall be calculated using Equation 14 with the HAP partial pressures determined at the temperature of the receiver.

$$E = \Delta\eta \times \frac{\sum_{i=1}^{n} P_i}{P_T - \sum_{j=1}^{m} P_j} \times MW_{HAP} \qquad \text{(Eq. 29)}$$

Where:

E=mass of HAP emitted

$\Delta\eta$=moles of noncondensable gas displaced

P_T=pressure in the receiver

P_i=partial pressure of the individual HAP at the receiver temperature

P_j=partial pressure of the individual condensable VOC (including HAP) at the receiver temperature

n=number of HAP compounds in the emission stream

MW_{HAP}=the average molecular weight of HAP in vapor exiting the receiver, as calculated using Equation 14 of this subpart

m=number of condensable VOC (including HAP) in the emission stream

(D)(*1*) Emissions from depressurization shall be calculated using Equation 30 of this subpart.

$$E = (V_{nc1} - V_{nc2}) \times \frac{\sum_{i=1}^{n} (P_i)}{P_T - \sum_{j=1}^{m} (P_j)} \times \frac{P_T}{RT} \times MW_{HAP} \qquad \text{(Eq. 30)}$$

Where:

E=mass of HAP vapor emitted

V_{nc1}=initial volume of noncondensable in the vessel, corrected to the final pressure, as calculated using Equation 31 of this subpart

V_{nc2}=final volume of noncondensable in the vessel, as calculated using Equation 32 of this subpart

P_i=partial pressure of each individual HAP at the receiver temperature

P_j=partial pressure of each condensable VOC (including HAP) at the receiver temperature

P_T=receiver pressure

T=temperature of the receiver, absolute

R=ideal gas law constant

MW_{HAP}=the average molecular weight of HAP calculated using Equation 14 of this subpart with partial pressures determined at the receiver temperature

n=number of HAP compounds in the emission stream

m=number of condensable VOC (including HAP) in the emission stream

(2) The initial and final volumes of noncondensable gas present in the vessel, adjusted to the pressure of the receiver, are calculated using Equations 31 and 32 of this subpart.

$$V_{nc1} = \frac{VP_{nc_1}}{P_T} \qquad \text{(Eq. 31)}$$

$$V_{nc2} = \frac{VP_{nc_2}}{P_T} \qquad \text{(Eq. 32)}$$

Where:

V_{nc1}=initial volume of noncondensable gas in the vessel

V_{nc2}=final volume of noncondensable gas in the vessel

V=free volume in the vessel being depressurized

P_{nc1}=initial partial pressure of the noncondensable gas, as calculated using Equation 33 of this subpart

P_{nc2}=final partial pressure of the noncondensable gas, as calculated using Equation 34 of this subpart

P_T=pressure of the receiver

(3) Initial and final partial pressures of the noncondensable gas in the vessel are determined using Equations 33 and 34 of this subpart.

$$P_{nc1} = P_1 - \sum_{j=1}^{m} P_j \qquad \text{(Eq. 33)}$$

$$P_{nc2} = P_2 - \sum_{j=1}^{m} P_j \qquad \text{(Eq. 34)}$$

Where:

P_{nc1}=initial partial pressure of the noncondensable gas in the vessel

P_{nc2}=final partial pressure of the noncondensable gas in the vessel

P_1=initial vessel pressure

P_2=final vessel pressure

P_j=partial pressure of each condensable VOC (including HAP) in the vessel

m=number of condensable VOC (including HAP) in the emission stream

(E) Emissions from vacuum systems shall be calculated using Equation 26 of this subpart.

(F) Emissions from gas evolution shall be calculated using Equation 8 with V calculated using Equation 27 of this subpart, T set equal to the receiver temperature, and the HAP partial pressures determined at the receiver temperature. The term for time, t, in Equation 10 of this subpart is not needed for the purposes of this calculation.

(G) Emissions from air drying shall be calculated using Equation 9 of this subpart with V equal to the air flow rate and P_i determined at the receiver temperature.

(d) *Initial compliance with storage vessel provisions.* The owner or operator of an existing or new affected source shall demonstrate initial compliance with the storage vessel standards in § 63.1362(c)(2) through (4) by fulfilling the requirements in either paragraph (d)(1), (2), (3), (4), (5), or (6) of this section, as applicable. The owner or operator shall demonstrate initial compliance with the planned routine maintenance provision in § 63.1362(c)(5) by fulfilling the requirements in paragraph (d)(7) of this section.

(1) *Percent reduction requirement for control devices.* If the owner or operator equips a Group 1 storage vessel with a closed vent system and control device, the owner or operator shall demonstrate initial compliance with the percent reduction requirement of § 63.1362(c)(2)(iv)(A) or (c)(3) either by calculating the efficiency of the control device using performance test data as specified in paragraph (d)(1)(i) of this section, or by preparing a design evaluation as specified in paragraph (d)(1)(ii) of this section.

(i) *Performance test option.* If the owner or operator elects to demonstrate initial compliance based on performance test data, the efficiency of the control device shall be calculated as specified in paragraphs (d)(1)(i)(A) through (D) of this section.

(A) At the reasonably expected maximum filling rate, Equations 35 and 36 of this subpart shall be used to calculate the mass rate of total organic HAP at the inlet and outlet of the control device.

$$E_i = K_2 \left(\sum_{j=1}^{n} C_{ij} M_{ij} \right) Q_i \qquad \text{(Eq. 35)}$$

$$E_o = K_2 \left(\sum_{j=1}^{n} C_{oj} M_{oj} \right) Q_o \qquad \text{(Eq. 36)}$$

Where:

C_{ij}, C_{oj}=concentration of sample component j of the gas stream at the inlet and outlet of the control device, respectively, dry basis, ppmv

E_i, E_o=mass rate of total organic HAP at the inlet and outlet of the control device, respectively, dry basis, kg/hr

M_{ij}, M_{oj}=molecular weight of sample component j of the gas stream at the inlet and outlet of the control device, respectively, g/gmole

Q_i, Q_o=flow rate of gas stream at the inlet and outlet of the control device, respectively, dscmm

K_2=constant, 2.494×10^{-6} (parts per million)$^{-1}$ (gram-mole per standard cubic meter) (kilogram/gram) (minute/hour), where standard temperature is 20 °C

(B) The percent reduction in total organic HAP shall be calculated using Equation 37 of this subpart:

$$R = \frac{E_i - E_o}{E_i}(100) \qquad \text{(Eq. 37)}$$

Where:

R=control efficiency of control device, percent

E_i=mass rate of total organic HAP at the inlet to the control device as calculated under paragraph (d)(1)(i)(A) of this section, kilograms organic HAP per hour

E_o=mass rate of total organic HAP at the outlet of the control device, as calculated under paragraph (d)(1)(i)(A) of this section, kilograms organic HAP per hour

(C) A performance test is not required to be conducted if the control device used to comply with § 63.1362(c) (storage tank provisions) is also used to comply with § 63.1362(b) (process vent provisions), provided compliance with § 63.1362(b) is demonstrated in accordance with paragraph (c) of this section and the demonstrated percent reduction is equal to or greater than 95 percent.

(D) A performance test is not required for any control device for which a previous test was conducted, provided the test was conducted using the same procedures specified in paragraph (b) of this section.

(ii) *Design evaluation option.* If the owner or operator elects to demonstrate initial compliance by conducting a design evaluation, the owner or operator shall prepare documentation in accordance with the design evaluation provisions in paragraph (a)(1) of this section, as applicable. The design evaluation shall demonstrate that the control device being used achieves the required control efficiency when the storage vessel is filled at the reasonably expected maximum filling rate.

(2) *Outlet concentration requirement for control devices.* If the owner or operator equips a Group 1 storage vessel with a closed vent system and control device, the owner or operator shall demonstrate initial compliance with the outlet concentration requirements of § 63.1362(c)(2)(iv)(B) or (c)(3) by fulfilling the requirements of paragraph (a)(6) of this section.

(3) *Floating roof.* If the owner or operator equips a Group 1 storage vessel with a floating roof to comply with the provisions in § 63.1362(c)(2) or (c)(3), the owner or operator shall demonstrate initial compliance by complying with the procedures described in paragraphs (d)(3)(i) and (ii) of this section.

(i) Comply with § 63.119(b), (c), or (d) of subpart G of this part, as applicable, with the differences specified in § 63.1362(d)(2)(i) through (iii).

(ii) Comply with the procedures described in § 63.120(a), (b), or (c) of subpart G of this part, as applicable, with the differences specified in § 63.1362(d)(2)(i), (iv), and (v).

(4) *Flares.* If the owner or operator controls the emissions from a Group 1 storage vessel with a flare, initial compliance is demonstrated by fulfilling the requirements in paragraph (a)(3) of this section.

(5) *Exemptions from initial compliance.* No initial compliance demonstration is required for control devices specified in paragraph (a)(4) of this section.

(6) *Initial compliance with alternative standard.* If the owner or operator equips a Group 1 storage vessel with a closed-vent system and control device, the owner or operator shall demonstrate initial compliance with the alternative standard in § 63.1362(c)(4) by fulfilling the requirements of paragraph (a)(5) of this section.

(7) *Planned routine maintenance.* The owner or operator shall demonstrate initial compliance with the planned routine maintenance provisions of § 63.1362(c)(5) by including the anticipated periods of planned routine maintenance for the first reporting period in the Notification of Compliance Status report as specified in § 63.1368(f).

(e) *Initial compliance with wastewater provisions.* The owner or operator shall demonstrate initial compliance with the wastewater requirements by complying with the applicable provisions in § 63.145 of subpart G of this part, except that the owner or operator need not comply with the requirement to determine visible emissions that is specified in § 63.145(j)(1) of subpart G of this part, and references to compounds in Table 8 of subpart G of this part are not applicable for the purposes of this subpart.

(f) *Initial compliance with the bag dump and product dryer provisions.* Compliance with the particulate matter concentration limits specified in § 63.1362(e) is demonstrated when the concentration of particulate matter is less than 0.01 gr/dscf, as measured using the method described in paragraph (b)(7) of this section.

(g) *Initial compliance with the pollution prevention alternative standard.* The owner or operator shall demonstrate initial compliance with § 63.1362(h)(2) and (3) for a PAI process unit by preparing the demonstration summary in accordance with paragraph (g)(1) of this section and by calculating baseline and target annual HAP and VOC factors in accordance with paragraphs (g)(2) and (3) of this section. To demonstrate initial compliance with § 63.1362(h)(3), the owner or operator must also comply with the procedures for add-on control devices that are specified in paragraph (g)(4) of this section.

(1) *Demonstration summary.* The owner or operator shall prepare a pollution prevention demonstration summary that shall contain, at a minimum, the information in paragraphs (g)(1)(i) through (iii) of this section. The demonstration summary shall be included in the Precompliance report as specified in § 63.1368(e)(4).

(i) Descriptions of the methodologies and forms used to measure and record consumption of HAP and VOC compounds.

(ii) Descriptions of the methodologies and forms used to measure and record production of the product(s).

(iii) Supporting documentation for the descriptions provided in accordance with paragraphs (g)(1)(i) and (ii) of this section including, but not limited to, operator log sheets and copies of daily, monthly, and annual inventories of materials and products. The owner or operator must show how this documentation will be used to calculate the annual factors required in § 63.1366(f)(1).

(2) *Baseline factors.* The baseline HAP and VOC factors shall be calculated by dividing the consumption of total HAP and total VOC by the production rate, per process, for the first 3-year period in which the process was operational, beginning no earlier than the period consisting of the 1987 through 1989 calendar years. Alternatively, for a process that has been operational for less than 3 years, but more than 1 year, the baseline factors shall be established for the time period from startup of the process until the present.

(3) *Target annual factors.* The owner or operator must calculate target annual factors in accordance with either paragraph (g)(3)(i) or (ii) of this section.

(i) To demonstrate initial compliance with § 63.1362(h)(2), the target annual HAP factor must be equal to or less than 15 percent of the baseline HAP factor. For each reduction in a HAP that is also a VOC, the target annual VOC factor must be lower than the baseline VOC factor by an equivalent amount on a mass basis. For each reduction in a HAP that is not a VOC, the target annual factor must be equal to or less than the baseline VOC factor.

(ii) To demonstrate initial compliance with § 63.1362(h)(3)(i), the target annual HAP and VOC factors must be calculated as specified in paragraph (g)(3)(i) of this section, except that when "15 percent" is referred to in paragraph (g)(3)(i) of this section, "50 percent" shall apply for the purposes of this paragraph.

(4) *Requirements for add-on control devices.* Initial compliance with the requirements for add-on control devices in § 63.1362(h)(3)(ii) is demonstrated when the requirements in paragraphs (g)(4)(i) through (iii) of this section are met.

(i) The yearly reductions associated with add-on controls that meet the criteria of § 63.1362(h)(3)(ii)(A) through (D), must be equal to or greater than the amounts calculated using Equations 38 and 39 of this subpart:

$$HAP_{reduced} = (HF_{base})(0.85 - R_{P2})(M_{prod}) \qquad \text{(Eq. 38)}$$

$$VOC_{reduced} = (VF_{base} - VF_{P2} - VF_{annual}) \times M_{prod} \qquad \text{(Eq. 39)}$$

Where:

$HAP_{reduced}$ = the annual HAP emissions reduction required by add-on controls, kg/yr

HF_{base} = the baseline HAP factor, kg HAP consumed/kg product

R_{P2} = the fractional reduction in the annual HAP factor achieved using pollution prevention where R_{P2} is ≥0.5

$VOC_{reduced}$ = required VOC emission reduction from add-on controls, kg/yr

VF_{base} = baseline VOC factor, kg VOC emitted/kg production

VF_{P2} = reduction in VOC factor achieved by pollution prevention, kg VOC emitted/kg production

VF_{annual} = target annual VOC factor, kg VOC emitted/kg production

M_{prod} = production rate, kg/yr

(ii) Demonstration that the criteria in § 63.1362(i)(3)(ii)(A) through (D) are met shall be accomplished through a description of the control device and of the material streams entering and exiting the control device.

(iii) The annual reduction achieved by the add-on control shall be quantified using the methods described in paragraph (c) of this section.

(h) *Compliance with emissions averaging provisions.* An owner or operator shall demonstrate compliance with the emissions averaging provisions of § 63.1362(h) by fulfilling the requirements of paragraphs (h)(1) through (6) of this section.

(1) The owner or operator shall develop and submit for approval an Emissions Averaging Plan containing all the information required in § 63.1367(d). The Emissions Averaging Plan shall be submitted no later than 18 months prior to the compliance date of the standard. The Administrator shall determine within 120 calendar days whether the Emissions Averaging Plan submitted by sources using emissions averaging presents sufficient information. The Administrator shall either approve the Emissions Averaging Plan, request changes, or request that the owner or operator submit additional information. Once the Administrator receives sufficient information, the Administrator shall approve, disapprove, or request changes to the plan within 120 days. If the Emissions Averaging Plan is disapproved, the owner or operator must still be in compliance with the standard by the compliance date.

(2) For all points included in an emissions average, the owner or operator shall comply with the procedures that are specified in paragraphs (h)(2)(i) through (v) of this section.

(i) Calculate and record monthly debits for all Group 1 emission points that are controlled to a level less stringent than the standard for those emission points. Equations in paragraph (h)(5) of this section shall be used to calculate debits.

(ii) Calculate and record monthly credits for all Group 1 and Group 2 emission points that are overcontrolled to compensate for the debits. Equations in paragraph (h)(6) of this section shall be used to calculate credits. All process vent, storage vessel, and wastewater emission points except those specified in § 63.1362(h)(1) through (6) may be included in the credit calculation.

(iii) Demonstrate that annual credits calculated according to paragraph (h)(6) of this section are greater than or equal to debits calculated according to paragraph (h)(5) of this section for the same annual compliance period. The initial demonstration in the Emissions Averaging Plan or operating permit application that credit-generating emission points will be capable of generating sufficient credits to offset the debit-generating emission points shall be made under representative operating conditions. After the compliance date, actual operating data shall be used for all debit and credit calculations.

(iv) Demonstrate that debits calculated for a quarterly (3-month) period according to paragraph (h)(5) of this section are not more than 1.30 times the credits for the same period calculated according to paragraph (h)(6) of this section. Compliance for the quarter shall be determined based on the ratio of credits and debits from that quarter, with 30 percent more debits than credits allowed on a quarterly basis.

(v) Record and report quarterly and annual credits and debits as required in §§ 63.1367(d) and 63.1368(d).

(3) Credits and debits shall not include emissions during periods of malfunction. Credits and debits shall not include periods of startup and shutdown for continuous processes.

(4) During periods of monitoring excursions, credits and debits shall be adjusted as specified in paragraphs (h)(4)(i) through (iii) of this section.

(i) No credits shall be assigned to the credit-generating emission point.

(ii) Maximum debits shall be assigned to the debit-generating emission point.

(iii) The owner or operator may demonstrate to the Administrator that full or partial credits or debits should be assigned using the procedures in § 63.150(l) of subpart G of this part.

(5) Debits are generated by the difference between the actual emissions from a Group 1 emission point that is uncontrolled or controlled to a level less stringent than the applicable standard and the emissions allowed for the Group 1 emission point. Debits shall be calculated in accordance with the procedures specified in paragraphs (h)(5)(i) through (iv) of this section.

(i) Source-wide debits shall be calculated using Equation 40 of this subpart.

Debits and all terms of Equation 40 of this subpart are in units of Mg/month

Where:

$$\text{Debits} = \sum_{i=1}^{n}\left[EPV_{iA} - (0.10)(EPV_{iU})\right] + \sum_{i=1}^{n}\left[ES_{iA} - (0.05)(ES_{iU})\right] + \sum_{i=1}^{n}\left[EWW_{iA} - (EWW_{iC})\right] \qquad \text{(Eq. 40)}$$

EPV_{iU} = uncontrolled emissions from process i calculated according to the procedures specified in paragraph (h)(5)(ii) of this section

EPV_{iA} = actual emissions from each Group 1 process i that is uncontrolled or is controlled to a level less stringent than the applicable standard. EPV_{iA} is calculated using the procedures in paragraph (h)(5)(ii) of this section

ES_{iU} = uncontrolled emissions from storage vessel i calculated according to the procedures specified in paragraph (h)(5)(iii) of this section

ES_{iA} = actual emissions from each Group 1 storage vessel i that is uncontrolled or is controlled to a level less stringent than the applicable standard. ES_{iA} is calculated using the procedures in paragraph (h)(5)(iii) of this section

EWW_{iC} = emissions from each Group 1 wastewater stream i if the standard had been applied to the uncontrolled emissions. EWW_{iC} is calculated using the procedures in paragraph (h)(5)(iv) of this section

EWW_{iA} = actual emissions from each Group 1 wastewater stream i that is uncontrolled or is controlled to a level less stringent than the applicable standard. EWW_{iA} is calculated using the procedures in paragraph (h)(5)(iv) of this section

n = the number of emission points being included in the emissions average; the value of n is not necessarily the same for process vents, storage tanks, and wastewater

(ii) Emissions from process vents shall be calculated in accordance with the procedures specified in paragraphs (h)(5)(ii)(A) through (C) of this section.

(A) Except as provided in paragraph (h)(5)(ii)(C) of this section, uncontrolled emissions for process vents shall be calculated using the procedures that are specified in paragraph (c)(2) of this section.

(B) Except as provided in paragraph (h)(5)(ii)(C) of this section, actual emissions for process vents shall be calculated using the procedures specified in paragraphs (c)(2) and (c)(3) of this section, as applicable.

(C) As an alternative to the procedures described in paragraphs (h)(5)(ii)(A) and (B) of this section, for continuous processes, uncontrolled and actual emissions may be calculated by the procedures described in § 63.150(g)(2) of subpart G of this part. For purposes of complying with this paragraph, a 90 percent reduction shall apply instead of the 98 percent reduction in § 63.150(g)(2)(iii) of subpart G of this part, and the term "process condenser" shall apply instead of the term "recovery device" in § 63.150(g)(2) for the purposes of this subpart.

(iii) Uncontrolled emissions from storage vessels shall be calculated in accordance with the procedures described in paragraph (d)(1) of this section. Actual emissions from storage vessels shall be calculated using the procedures specified in § 63.150(g)(3)(ii), (iii), or (iv) of subpart G of this subpart, as appropriate, except that when § 63.150(g)(3)(ii)(B) refers to the procedures in § 63.120(d) for determining percent reduction for a control device, § 63.1365(d)(2) or (3) shall apply for the purposes of this subpart.

(iv) Emissions from wastewater shall be calculated using the procedures specified in § 63.150(g)(5) of subpart G of this part.

(6) Credits are generated by the difference between emissions that are allowed for each Group 1 and Group 2 emission point and the actual emissions from that Group 1 or Group 2 emission point that have been controlled after November 15, 1990 to a level more stringent than what is required in this subpart or any other State or Federal rule or statute. Credits shall be calculated in accordance with the procedures specified in paragraphs (h)(6)(i) through (v) of this section.

(i) Source-wide credits shall be calculated using Equation 41 of this subpart. Credits and all terms in Equation 41 of this subpart are in units of Mg/month, the baseline date is November 15, 1990, the terms consisting of a constant multiplied by the uncontrolled emissions are the emissions from each emission point subject to the standards in § 63.1362(b) and (c) that is controlled to a level more stringent than the standard.

Where:

$$\text{Credits} = D\sum_{i=1}^{n}\left[(0.10)(EPV1_{iU}) - EPV1_{iA}\right] + D\sum_{i=1}^{m}(EPV2_{iB} - EPV2_{iA}) + D\sum_{i=1}^{n}\left[(0.05)(ES1_{iU}) - ES1_{iA}\right] +$$
$$D\sum_{i=1}^{m}(ES2_{iB} - ES2_{iA}) + D\sum_{i=1}^{n}(EWW1_{iC} - EWW1_{iA}) + D\sum_{i=1}^{m}(EWW2_{iB} - EWW2_{iA}) \qquad \text{(Eq. 41)}$$

$EPV1_{iU}$ = uncontrolled emissions from each Group 1 process i calculated according to the procedures in paragraph (h)(6)(iii)(A) of this section

$EPV1_{iA}$ = actual emissions from each Group 1 process i that is controlled to a level more stringent than the applicable standard. $EPV1_{iA}$ is calculated according to the procedures in paragraph (h)(6)(iii)(B) of this section

$EPV2_{iB}$ = emissions from each Group 2 process i at the baseline date. $EPV2_{iB}$ is calculated according to the procedures in paragraph (h)(6)(iii)(C) of this section

$EPV2_{iA}$ = actual emissions from each Group 2 process i that is controlled. $EPV2_{iA}$ is calculated according to the procedures in paragraph (h)(6)(iii)(C) of this section

$ES1_{iU}$ = uncontrolled emissions from each Group 1 storage vessel i calculated according to the procedures in paragraph (h)(6)(iv) of this section

$ES1_{iA}$ = actual emissions from each Group 1 storage vessel i that is controlled to a level more stringent that the applicable standard. $ES1_{iA}$ is calculated according to the procedures in paragraph (h)(6)(iv) of this section

$ES2_{iB}$ = emissions from each Group 2 storage vessel i at the baseline date. $ES2_{iB}$ is calculated according to the procedures in paragraph (h)(6)(iv) of this section

$ES2_{iA}$ = actual emissions from each Group 2 storage vessel i that is controlled. $ES2_{iA}$ is calculated according to the procedures in paragraph (h)(6)(iv) of this section

requirements for all emission points except equipment leaks. This stay will remain in effect until the date that the amendments to these rules (which were proposed on March 9, 1999) are promulgated, at which point the EPA will publish new compliance dates for these affected sources. The EPA is issuing this stay of the compliance dates for existing affected sources and for new affected sources with an initial start up date on or after March 9, 1999, because of the significant amendments to these NESHAP that were proposed on March 9, 1999. It is unlikely that those amendments will be promulgated before the compliance dates for existing affected sources subject to Group I and Group IV Polymers and Resins regulations (September 5, 1999, and September 12, 1999, respectively).

DATES: This direct final rule is effective on August 30, 1999 without further notice unless EPA receives adverse comments by July 30, 1999. Should EPA receive such comments, it will publish a timely withdrawal informing the public that this rule will not take effect.

ADDRESSES: Comments. Written comments should be submitted (in duplicate, if possible) to: Air and Radiation Docket and Information Center (6102), Attention Docket Number A-92-44 (Group I Polymers and Resins) and/or Docket Number A-92-45 (Group IV Polymers and Resins), Room M-1500, U.S. Environmental Protection Agency, 401 M Street, SW, Washington, DC 20460. The EPA requests that a separate copy of each public comment be sent to the contact person listed below (see **FOR FURTHER INFORMATION CONTACT**). Comments may also be submitted electronically by following the instructions provided in **SUPPLEMENTARY INFORMATION.**

Docket. Docket numbers A-92-44 and A-92-45, containing information relevant to this direct final rule, are available for public inspection between 8:00 a.m. and 5:30 p.m., Monday through Friday (except for Federal holidays) at the following address: U.S. Environmental Protection Agency, Air and Radiation Docket and Information Center (MC-6102), 401 M Street, SW, Washington, DC 20460. The docket is located at the above address in Room M-1500, Waterside Mall (ground floor). Alternatively, a docket index, as well as individual items contained within the docket, may be obtained by calling (202) 260-7548 or (202) 260-7549. A reasonable fee may be charged for copying.

FOR FURTHER INFORMATION CONTACT: Mr. Robert E. Rosensteel, Organic Chemicals Group, Emission Standards Division (MD-13), Office of Air Quality Planning and Standards, U.S. EPA, Research Triangle Park, North Carolina 27711, telephone number (919) 541-5608, electronic mail address rosensteel.bob@epa.gov.

SUPPLEMENTARY INFORMATION:

Plain Language

In compliance with President Clinton's June 1, 1998 Executive Memorandum on Plain Language in government writing, this notice is written using plain language. Thus, the use of "we" in this notice refers to EPA. The use of "you" refers to the reader, and may include industry; State, local, and tribal governments; environmental groups; and other interested individuals.

Regulated Entities

Entities potentially regulated by this direct final rule include:

Category	Examples of regulated entities
Industry	Butyl Rubber, Halobutyl Rubber, Epichlorohydrin Elastomer, Ethylene Propylene Rubber, Hypalon™, Neoprene, Nitrile Butadiene Rubber, Nitrile Butadiene Latex, Polybutadiene Rubber, Styrene-Butadiene Rubber or Latex, Acrylonitrile Butadiene Styrene Resin, Styrene Acrylonitrile Resin, Methyl Methacrylate Acrylonitrile Butadiene Styrene Resin, Methyl Methacrylate Butadiene Styrene Resin, Poly(ethylene terephthalate) Resin, Polystyrene Resin, and Nitrile Resin producers.

This table is not intended to be exhaustive, but rather provides a guide regarding entities likely to be affected by this action. To determine whether your facility is regulated by this direct final rule, you should carefully examine the applicability criteria in 40 CFR 63.480 and 63.1310. If you have any questions regarding the applicability of this direct final rule to a particular entity, consult the person listed in the preceding **FOR FURTHER INFORMATION CONTACT** section.

Electronic Access and Filing Addresses

You can get this notice, the promulgated texts, and other background information in Docket Numbers A-92-44 and A-92-45 by request from EPA's Air and Radiation Docket and Information Center (see **ADDRESSES**). You can also access materials through the EPA web site at: http://www.epa.gov/ttn/oarpg. For further information and general questions regarding the Technology Transfer Network (TTN), you can call Mr. Hersch Rorex (919) 541-5637 or Mr. Phil Dickerson (919) 541-4814.

If you send comments by electronic mail (e-mail) to "a-and-r-docket@epamail.epa.gov," they should be in an ASCII file, and the file should not use special characters or encryption. We will also accept comments and data on diskette in WordPerfect 5.1 or 6.1 or ASCII file format. You may file comments on the proposed rule online at many Federal Depository Libraries. Identify all comments and data in electronic form by the docket numbers A-92-44 and/or A-92-45. Do not send any confidential business information through electronic mail.

The following outline is provided to aid you in reading the preamble to the direct final rule.

I. Why are we taking this action?
II. Who does this stay impact?
III. What are the administrative requirements for this direct final rule?

I. Why are we taking this action?

On September 5, 1996 and September 12, 1996, we promulgated NESHAP for Group I Polymers and Resins and Group IV Polymers and Resins as subparts U (Group I) and JJJ (Group IV) in 40 CFR part 63. These regulations require Group I Polymers and Resins existing affected sources, with certain exceptions (listed in § 63.481(d)), to be in compliance with the equipment leak provisions in § 63.502 by July 31, 1997. Likewise these regulations require Group IV Polymers and Resins existing affected sources, with certain exceptions (listed in § 63.1311(d)) to be in compliance with the equipment leak provisions in § 63.1331 by February 27, 2001. The Group I Polymers and Resins NESHAP also requires that existing affected sources comply with the nonequipment leak provisions in subpart U by September 5, 1999. Group IV existing affected sources subject to subpart JJJ are required to comply with the nonequipment leak provisions in subpart JJJ by September 12, 1999.

Under 40 CFR parts 63.481 and 63.1311, with the exception of new sources producing PET, new affected sources are required to comply with all provisions of the applicable rules upon initial start-up, or by September 5, 1996 or February 27, 1998 (respectively), whichever is later. New affected sources producing PET are required to be in compliance with all nonequipment leak provisions at initial start-up and with the equipment leak provisions by

Authority: 42 U.S.C. 7401–7671q.

Subpart X—Michigan

2. Section 52.1170 is amended by adding paragraph (c)(111) to read as follows:

§ 52.1170 Identification of Plan.

* * * * *

(c) * * *

(111) On March 18, 1999, the State of Michigan submitted a revision to the Michigan State Implementation Plan for carbon monoxide containing a section 175A maintenance plan for the Detroit area as part of Michigan's request to redesignate the area from nonattainment to attainment for carbon monoxide. Elements of the section 175A maintenance plan include a base year (1996 attainment year) emission inventory for CO, a demonstration of maintenance of the ozone NAAQS with projected emission inventories to the year 2010, a plan to verify continued attainment, a contingency plan, and an obligation to submit a subsequent maintenance plan revision in 8 years as required by the Clean Air Act. If the area records a violation of the CO NAAQS (which must be confirmed by the State), Michigan will implement one or more appropriate contingency measure(s) which are in the contingency plan. The menu of contingency measures includes enforceable emission limitations for stationary sources, transportation control measures, or a vehicle inspection and maintenance program.

2. Subpart X is amended by adding § 52.1179 to read as follows:

§ 52.1179 Control strategy: Carbon monoxide.

Approval—On March 18, 1999, the Michigan Department of Environmental Quality submitted a request to redesignate the Detroit CO nonattainment area (consisting of portions of Wayne, Oakland, and Macomb Counties) to attainment for CO. As part of the redesignation request, the State submitted a maintenance plan as required by 175A of the Clean Air Act, as amended in 1990. Elements of the section 175A maintenance plan include a base year (1996 attainment year) emission inventory for CO, a demonstration of maintenance of the ozone NAAQS with projected emission inventories to the year 2010, a plan to verify continued attainment, a contingency plan, and an obligation to submit a subsequent maintenance plan revision in 8 years as required by the Clean Air Act. If the area records a violation of the CO NAAQS (which must be confirmed by the State), Michigan will implement one or more appropriate contingency measure(s) which are contained in the contingency plan. The menu of contingency measures includes enforceable emission limitations for stationary sources, transportation control measures, or a vehicle inspection and maintenance program. The redesignation request and maintenance plan meet the redesignation requirements in section 107(d)(3)(E) and 175A of the Act as amended in 1990, respectively.

PART 81—[AMENDED]

1. The authority citation for part 81 continues to read as follows:

Authority: 42 U.S.C. 7401 *et seq.*

2. In § 81.323 the table entitled "Michigan-carbon monoxide" is amended by revising the entry for the "Detroit Area" to read as:

§ 81.323 Michigan.

* * * * *

MICHIGAN—CARBON MONOXIDE

Designated areas	Designation		Classification	
	Date [1]	Type	Date [1]	Type
DETROIT AREA				
Areas included within the following (counter-clockwise):				
Lake St. Clair to 14 Mile Road to Kelly Road, N. to 15 Mile Road to Hayes Road, S. to 14 Mile Road to Clawson City Boundary, following N. Clawson City boundary to N. Royal Oak boundary to 13 Mile Road to Evergreen Road to southern Beverly Hills City boundary to southern Bingham Farms City boundary to southern Franklin Hills City boundary to Inkster Road, south to Pennsylvania Road extending east to the Detroit River. Macomb County (part).	August 30, 1999	Attainment.		
Oakland County (part)	August 30, 1999	Attainment.		
Wayne County (part)	August 30, 1999	Attainment.		
*	*	*	*	

[1] This date is November 15, 1990, unless otherwise noted.

* * * * *

[FR Doc. 99–16372 Filed 6–29–99; 8:45 am]

BILLING CODE 6560–50–P

ENVIRONMENTAL PROTECTION AGENCY

40 CFR Part 63

[AD–FRL–6369–9]

RIN 2060–AH47

National Emission Standards for Hazardous Air Pollutants: Group I Polymers and Resins and Group IV Polymers and Resins

AGENCY: Environmental Protection Agency (EPA).

ACTION: Direct final rule; notice of stay.

SUMMARY: The EPA is taking direct final action to indefinitely stay the compliance dates for portions of the national emission standards for hazardous air pollutants (NESHAP) for Group I Polymers and Resins and Group IV Polymers and Resins. This direct final rule stays, indefinitely, the compliance dates for existing affected sources and new affected sources with an initial start up date on or after March 9, 1999, which are subject to the Group I Polymers and Resins and Group IV Polymers and Resins NESHAP

a relative accuracy test of the CEMS as specified in section 7 of Performance Specification 2.

(d) *Waiver of recordkeeping or reporting requirements.* (1) Until a waiver of a recordkeeping or reporting requirement has been granted by the Administrator under this paragraph, the owner or operator of an affected source remains subject to the recordkeeping and reporting requirements of this subpart and any subparts referenced by this subpart.

(2) Recordkeeping or reporting requirements may be waived upon written application to the Administrator if, in the Administrator's judgment, the affected source is achieving the relevant standard(s), or the source is operating under an extension of compliance, or the owner or operator has requested an extension of compliance and the Administrator is still considering that request.

(3) If an application for a waiver of recordkeeping or reporting is made, the application shall accompany the request for an extension of compliance under paragraph (a) of this section, any required compliance progress report or compliance status report required under this part or in the source's title V permit, or an excess emissions and continuous monitoring system performance report required under § 63.999(c) or another subpart referenced by this subpart, whichever is applicable. The application shall include whatever information the owner or operator considers useful to convince the Administrator that a waiver of recordkeeping or reporting is warranted.

(4) The Administrator will approve or deny a request for a waiver of recordkeeping or reporting requirements under this paragraph when he/she—

(i) Approves or denies an extension of compliance under paragraph (a) of this section; or

(ii) Makes a determination of compliance following the submission of a required Notification of Compliance Status report or excess emissions and continuous monitoring systems performance report; or

(iii) Makes a determination of suitable progress towards compliance following the submission of a compliance progress report, whichever is applicable.

(5) A waiver of any recordkeeping or reporting requirement granted under this paragraph may be conditioned on other recordkeeping or reporting requirements deemed necessary by the Administrator.

(6) Approval of any waiver granted under this section shall not abrogate the Administrator's authority under the Act or in any way prohibit the Administrator from later canceling the waiver. The cancellation will be made only after notice is given to the owner or operator of the affected source.

§ 63.1113 Procedures for approval of alternative means of emission limitation.

(a) *Alternative means of emission limitation.* An owner or operator of an affected source may request a determination of alternative means of emission limitation to the requirements of design, equipment, work practice, or operational standards of this subpart or of a subpart referenced by this subpart. If, in the judgment of the Administrator, an alternative means of emission limitation will achieve a reduction in HAP emissions at least equivalent to the reduction in emissions from that source achieved under any design, equipment, work practice, or operational standards (but not performance standards) in this subpart, the Administrator will publish in the **Federal Register** a notice permitting the use of the alternative means for purposes of compliance with that requirement.

(1) The notice may condition the permission on requirements related to the operation and maintenance of the alternative means.

(2) Any such notice shall be published only after public notice and an opportunity for a hearing.

(b) *Content of submittal.* (1) In order to obtain approval, any person seeking permission to use an alternative means of compliance under this section shall collect, verify, and submit to the Administrator information showing that the alternative means achieves equivalent emission reductions. An owner or operator of an affected source seeking permission to use an alternative means of compliance who has not previously performed testing shall also submit a proposed test plan. If the owner or operator seeks permission to use an alternative means of compliance based on previously performed testing, they shall submit the results of testing, a description of the procedures followed in testing or monitoring, and a description of pertinent conditions during testing or monitoring.

(2) The owner or operator who requests an alternative means of emissions limitation shall submit a description of the proposed testing, monitoring, recordkeeping, and reporting that will be used and the proposed basis for demonstrating compliance.

(3) For storage vessels, the owner or operator shall include the results of actual emissions tests using full-size or scale-model storage vessels that accurately collect and measure all regulated HAP emissions using a given control technique, and that accurately simulate wind and account for other emission variables such as temperature and barometric pressure, or an engineering analysis that the Administrator determines to be an accurate method of determining equivalence.

(4) For proposed alternatives to equipment leak requirements referenced by this subpart, the owner or operator shall also submit the information specified in and meet the requirements for alternate means of emission limitation specified in the referenced subparts.

[FR Doc. 99–13164 Filed 6–28–99; 8:45 am]

BILLING CODE 6560–50–P

requirements as specified in the relevant standard. The Administrator may require that such demonstration be performed for each affected source; or

(ix) Alternative monitoring requirements when the effluent from a single affected source or the combined effluent from two or more affected sources is released to the atmosphere through more than one point.

(3) *Conflicts between alternative and required methods.* If the Administrator finds reasonable grounds to dispute the results obtained by an alternative monitoring method, requirement, or procedure, the Administrator may require the use of a method, requirement, or procedure specified in this section or in the relevant standard. If the results of the specified and alternative method, requirement, or procedure do not agree, the results obtained by the specified method, requirement, or procedure shall prevail.

(4)(i) *Request to use alternative monitoring method.* An owner or operator who wishes to use an alternative monitoring method shall submit an application to the Administrator as described in paragraph (c)(4)(ii) of this section. The application may be submitted at any time provided that the monitoring method is not used to demonstrate compliance with a relevant standard or other requirement. If the alternative monitoring method is to be used to demonstrate compliance with a relevant standard, the application shall be submitted not later than with the site-specific test plan required, or with the site-specific performance evaluation plan (if requested), or at least 60 days before the performance evaluation is scheduled to begin.

(ii) The application shall contain a description of the proposed alternative monitoring system and a performance evaluation test plan, if required. In addition, the application shall include information justifying the owner or operator's request for an alternative monitoring method, such as the technical or economic infeasibility, or the impracticality, of the affected source using the required method.

(iii) The owner or operator may submit the information required in this paragraph well in advance of the submittal dates specified in paragraph (c)(4)(i) of this section to ensure a timely review by the Administrator in order to meet the compliance demonstration date specified in this section or the relevant standard.

(5) *Approval of request to use alternative monitoring method.* (i) The Administrator will notify the owner or operator of approval or intention to deny approval of the request to use an alternative monitoring method within 30 days after receipt of the original request and within 30 days after receipt of any supplementary information that is submitted. Before disapproving any request to use an alternative monitoring method, the Administrator will notify the applicant of the Administrator's intention to disapprove the request together with—

(A) Notice of the information and findings on which the intended disapproval is based; and

(B) Notice of opportunity for the owner or operator to present additional information to the Administrator before final action on the request. At the time the Administrator notifies the applicant of his or her intention to disapprove the request, the Administrator will specify how much time the owner or operator will have after being notified of the intended disapproval to submit the additional information.

(ii) The Administrator may establish general procedures and criteria in a relevant standard to accomplish the requirements of paragraph (c)(5)(i) of this section.

(iii) If the Administrator approves the use of an alternative monitoring method for an affected source under paragraph (c)(5)(i) of this section, the owner or operator of such source shall continue to use the alternative monitoring method until he or she receives approval from the Administrator to use another monitoring method as allowed by this subpart or a subpart referenced by this subpart.

(6) *Alternative to the relative accuracy test.* An alternative to the relative accuracy test for CEMS specified in a relevant standard may be requested as follows:

(i) *Criteria for approval of alternative procedures.* An alternative to the test method for determining relative accuracy is available for affected sources with emission rates demonstrated to be less than 50 percent of the relevant standard. The owner or operator of an affected source may petition the Administrator under paragraph (c)(6)(ii) of this section to substitute the relative accuracy test in section 7 of Performance Specification 2 with the procedures in section 10 if the results of a performance test conducted according to the requirements specified in this subpart or subpart referenced by this subpart demonstrate that the emission rate of the pollutant of interest in the units of the relevant standard is less than 50 percent of the relevant standard. For affected sources subject to emission limitations expressed as control efficiency levels, the owner or operator may petition the Administrator to substitute the relative accuracy test with the procedures in section 10 of Performance Specification 2 if the control device exhaust emission rate is less than 50 percent of the level needed to meet the control efficiency requirement. The alternative procedures do not apply if the CEMS is used continuously to determine compliance with the relevant standard.

(ii) *Petition to use alternative to relative accuracy test.* The petition to use an alternative to the relative accuracy test shall include a detailed description of the procedures to be applied, the location and the procedure for conducting the alternative, the concentration or response levels of the alternative relative accuracy materials, and the other equipment checks included in the alternative procedure(s). The Administrator will review the petition for completeness and applicability. The Administrator's determination to approve an alternative will depend on the intended use of the CEMS data and may require specifications more stringent than in Performance Specification 2.

(iii) *Rescission of approval to use alternative to relative accuracy test.* The Administrator will review the permission to use an alternative to the CEMS relative accuracy test and may rescind such permission if the CEMS data from a successful completion of the alternative relative accuracy procedure indicate that the affected source's emissions are approaching the level of the relevant standard. The criterion for reviewing the permission is that the collection of CEMS data shows that emissions have exceeded 70 percent of the relevant standard for any averaging period, as specified in the relevant standard. For affected sources subject to emission limitations expressed as control efficiency levels, the criterion for reviewing the permission is that the collection of CEMS data shows that exhaust emissions have exceeded 70 percent of the level needed to meet the control efficiency requirement for any averaging period, as specified in the relevant standard. The owner or operator of the affected source shall maintain records and determine the level of emissions relative to the criterion for permission to use an alternative for relative accuracy testing. If this criterion is exceeded, the owner or operator shall notify the Administrator within 10 days of such occurrence and include a description of the nature and cause of the increased emissions. The Administrator will review the notification and may rescind permission to use an alternative and require the owner or operator to conduct

or intention to deny approval of a request for an extension of compliance within 30 days after receipt of sufficient information to evaluate a request submitted under paragraph (a)(4)(ii) of this section. The 30-day approval or denial period will begin after the owner or operator has been notified in writing that his/her application is complete. The Administrator will notify the owner or operator in writing of the status of his/her application, that is, whether the application contains sufficient information to make a determination, within 15 days after receipt of the original application and within 15 days after receipt of any supplementary information that is submitted.

(ii) When notifying the owner or operator that his/her application is not complete, the Administrator will specify the information needed to complete the application and provide notice of opportunity for the applicant to present, in writing, within 15 days after he/she is notified of the incomplete application, additional information or arguments to the Administrator to enable further action on the application.

(iii) Before denying any request for an extension of compliance, the Administrator will notify the owner or operator in writing of the Administrator's intention to issue the denial, together with—

(A) Notice of the information and findings on which the intended denial is based; and

(B) Notice of opportunity for the owner or operator to present in writing, within 15 days after he/she is notified of the intended denial, additional information or arguments to the Administrator before further action on the request.

(iv) A final determination to deny any request for an extension will be in writing and will set forth the specific grounds on which the denial is based. The final determination will be made within 30 days after presentation of additional information or argument (if the application is complete), or within 30 days after the final date specified for the presentation if no presentation is made.

(14) *Termination of extension.* The Administrator may terminate an extension of compliance at an earlier date than specified if any specification under paragraphs (a)(10)(iii) or (iv) of this section is not met.

(15) [Reserved]

(16) *Administrator's authority.* The granting of an extension under this section shall not abrogate the Administrator's authority under section 114 of the Act.

(b) *Waiver of performance tests.* (1) *Applicability of this section.* Until a waiver of a performance testing requirement has been granted by the Administrator under this paragraph, the owner or operator of an affected source remains subject to the requirements of this section.

(2) *General.* Individual performance tests may be waived upon written application to the Administrator if, in the Administrator's judgment, the source is meeting the relevant standard(s) on a continuous basis, or the source is being operated under an extension of compliance, or the owner or operator has requested an extension of compliance and the Administrator is still considering that request.

(3) *Request to waive a performance test.* (i) If a request is made for an extension of compliance under paragraph (a) of this section, the application for a waiver of an initial performance test shall accompany the information required for the request for an extension of compliance. If no extension of compliance is requested or if the owner or operator has requested an extension of compliance and the Administrator is still considering that request, the application for a waiver of an initial performance test shall be submitted at least 60 days before the performance test if a site-specific test plan is not submitted.

(ii) If an application for a waiver of a subsequent performance test is made, the application may accompany any required compliance progress report, compliance status report, or excess emissions and continuous monitoring system performance report, but it shall be submitted at least 60 days before the performance test if a site-specific test plan is not submitted.

(iii) Any application for a waiver of a performance test shall include information justifying the owner or operator's request for a waiver, such as the technical or economic infeasibility, or the impracticality, of the affected source performing the required test.

(4) *Approval of request to waive performance test.* The Administrator will approve or deny a request for a waiver of a performance test made under paragraph (b)(3) of this section when he/she—

(i) Approves or denies an extension of compliance under paragraph (a) of this section; or

(ii) Approves or disapproves a site-specific test plan; or

(iii) Makes a determination of compliance following the submission of a required compliance status report or excess emissions and continuous monitoring systems performance report; or

(iv) Makes a determination of suitable progress towards compliance following the submission of a compliance progress report, whichever is applicable.

(5) *Administrator's authority.* Approval of any waiver granted under this section shall not abrogate the Administrator's authority under the Act or in any way prohibit the Administrator from later canceling the waiver. The cancellation will be made only after notice is given to the owner or operator of the affected source.

(c) *Use of an alternative monitoring method.* (1) *General.* Until permission to use an alternative monitoring method has been granted by the Administrator under this paragraph, the owner or operator of an affected source remains subject to the requirements of this section and the relevant standard.

(2) *Alternatives to monitoring methods.* After receipt and consideration of written application, the Administrator may approve alternatives to any monitoring methods or procedures of this part including, but not limited to, the following:

(i) Alternative monitoring requirements when installation of a CMS specified by a relevant standard would not provide accurate measurements due to liquid water or other interferences caused by substances within the effluent gases;

(ii) Alternative monitoring requirements when the affected source is infrequently operated;

(iii) Alternative monitoring requirements to accommodate CEMS that require additional measurements to correct for stack moisture conditions;

(iv) Alternative locations for installing CMS when the owner or operator can demonstrate that installation at alternate locations will enable accurate and representative measurements;

(v) Alternate methods for converting pollutant concentration measurements to units of the relevant standard;

(vi) Alternate procedures for performing daily checks of zero (low-level) and high-level drift that do not involve use of high-level gases or test cells;

(vii) Alternatives to the American Society for Testing and Materials (ASTM) test methods or sampling procedures specified by any relevant standard;

(viii) Alternative CMS that do not meet the design or performance requirements in this part, but adequately demonstrate a definite and consistent relationship between their measurements and the measurements of opacity by a system complying with the

the extension to assure that the health of persons will be protected from imminent endangerment. Any request for an extension of compliance with a relevant standard under this paragraph shall be submitted in writing to the Administrator not later than 15 days after the effective date of the relevant standard.

(5) *Requests for extensions of compliance for BACT or LAER.* The owner or operator of an existing source who has installed BACT or technology required to meet LAER (as specified in paragraph (a)(2)(ii) of this section) prior to the promulgation of a relevant emission standard in this part may request that the Administrator grant an extension allowing the source 5 years from the date on which such installation was achieved, as determined by the Administrator, to comply with the standard. Any request for an extension of compliance with a relevant standard under this paragraph shall be submitted in writing to the Administrator not later than 120 days after the promulgation date of the standard. The Administrator may grant such an extension if he or she finds that the installation of BACT or technology to meet LAER controls the same pollutant (or stream of pollutants) that would be controlled at that source by the relevant emission standard.

(6) *Contents of request.* (i) The request for a compliance extension under paragraph (a)(4) of this section shall include the following information:

(A) A description of the controls to be installed to comply with the standard;

(B) A compliance schedule, including the date by which each step toward compliance will be reached. At a minimum, the list of dates shall include:

(*1*) The date by which contracts for emission control systems or process changes for emission control will be awarded, or the date by which orders will be issued for the purchase of component parts to accomplish emission control or process changes;

(*2*) The date by which on-site construction, installation of emission control equipment, or a process change is to be initiated;

(*3*) The date by which on-site construction, installation of emission control equipment, or a process change is to be completed; and

(*4*) The date by which final compliance is to be achieved.

(C) A description of interim emission control steps, that will be taken during the extension period, including milestones to assure proper operation and maintenance of emission control and process equipment; and

(D) Whether the owner or operator is also requesting an extension of other applicable requirements (e.g., performance testing requirements).

(ii) The request for a compliance extension under paragraph (a)(5) of this section shall include all information needed to demonstrate to the Administrator's satisfaction that the installation of BACT or technology to meet LAER controls the same pollutant (or stream of pollutants) that would be controlled at that source by the relevant emission standard.

(7) *Additional advice.* Advice on requesting an extension of compliance may be obtained from the Administrator.

(8) *Approval of request for extension of compliance.* Paragraphs (a)(9) through (14) of this section concern approval of an extension of compliance requested under paragraphs (a)(4) through (6) of this section.

(9) *General.* Based on the information provided in any request made under paragraphs (a)(4) through (6) of this section, or other information, the Administrator may grant an extension of compliance with an emission standard, as specified in paragraphs (a)(4) and (5) of this section.

(10) *Contents of extension.* The extension will be in writing and will—

(i) Identify each affected source covered by the extension;

(ii) Specify the termination date of the extension;

(iii) Specify the dates by which steps toward compliance are to be taken, if appropriate;

(iv) Specify other applicable requirements to which the compliance extension applies (e.g., performance tests); and

(v)(A) Under paragraph (a)(4) of this section, specify any additional conditions that the Administrator deems necessary to assure installation of the necessary controls and protection of the health of persons during the extension period; or

(B) Under paragraph (a)(5)of this section, specify any additional conditions that the Administrator deems necessary to assure the proper operation and maintenance of the installed controls during the extension period.

(11) *Progress reports.* The owner or operator of an existing source that has been granted an extension of compliance under paragraph (a)(10) of this section may be required to submit to the Administrator progress reports indicating whether the steps toward compliance outlined in the compliance schedule have been reached. The contents of the progress reports and the dates by which they shall be submitted will be specified in the written extension of compliance granted under paragraph (a)(9) of this section.

(12) *Notifications to owners and operators regarding compliance extensions for section 112(d) standards.* (i) The Administrator will notify the owner or operator in writing of approval or intention to deny approval of a request for an extension of compliance within 30 days after receipt of sufficient information to evaluate a request submitted under paragraph (a)(4)(i) or (a)(5) of this section. The 30-day approval or denial period will begin after the owner or operator has been notified in writing that his/her application is complete. The Administrator will notify the owner or operator in writing of the status of his/her application, that is, whether the application contains sufficient information to make a determination, within 30 days after receipt of the original application and within 30 days after receipt of any supplementary information that is submitted.

(ii) When notifying the owner or operator that his/her application is not complete, the Administrator will specify the information needed to complete the application and provide notice of opportunity for the applicant to present, in writing, within 30 days after he/she is notified of the incomplete application, additional information or arguments to the Administrator to enable further action on the application.

(iii) Before denying any request for an extension of compliance, the Administrator will notify the owner or operator in writing of the Administrator's intention to issue the denial, together with—

(A) Notice of the information and findings on which the intended denial is based; and

(B) Notice of opportunity for the owner or operator to present in writing, within 15 days after he/she is notified of the intended denial, additional information or arguments to the Administrator before further action on the request.

(iv) The Administrator's final determination to deny any request for an extension will be in writing and will set forth the specific grounds on which the denial is based. The final determination will be made within 30 days after presentation of additional information or argument (if the application is complete), or within 30 days after the final date specified for the presentation if no presentation is made.

(13) *Notifications to owners and operators regarding compliance extensions for section 112(f) standards.* (i) The Administrator will notify the owner or operator in writing of approval

calendar reporting period, as appropriate), unless the information is submitted with the Periodic Report. The report shall include the information specified in paragraphs (b)(1)(i) through (b)(1)(iv) of this section.

(i) The name, title, and signature of the owner or operator or other responsible official certifying its accuracy.

(ii) The number of startup, shutdown, and malfunction events and the total duration of all periods of startup, shutdown, and malfunction for the reporting period if the total duration amounts to either of the durations in paragraphs (b)(1)(ii)(A) or (B) of this section. Records of the number of CPMS startup, shutdown, and malfunction events and the total duration of all periods of startup, shutdown, and malfunction for the reporting period are required under § 63.998(c)(1)(ii)(C) and (D) of this section.

(A) Total duration of periods of malfunctioning of a CPMS equal to or greater than 5 percent of that CPMS operating time for the reporting period; or

(B) Total duration of periods of startup, shutdown, and malfunction for an affected source equal to or greater than 1 percent of that affected source's operating time for the reporting period.

(iii) Records documenting each startup, shutdown and malfunction event as required under § 63.998(c)(1)(ii)(F).

(iv) Records documenting the total duration of operating time as required under § 63.998(c)(1)(ii)(H).

(2) *Immediate startup, shutdown, and malfunction reports.* Notwithstanding the allowance to reduce the frequency of reporting for startup, shutdown, and malfunction reports under paragraph (b)(1) of this section, any time an action taken by an owner or operator during a startup, shutdown, or malfunction (including actions taken to correct a malfunction) during which excess emissions occur is not consistent with the procedures specified in the affected source's plan, the owner or operator shall report the actions taken for that event within 2 working days after commencing actions inconsistent with the plan, followed by a letter delivered or postmarked within 7 working days after the end of the event. The immediate report required under this paragraph shall contain the name, title, and signature of the owner or operator or other responsible official who is certifying its accuracy, explaining the circumstances of the event, the reasons for not following the startup, shutdown, and malfunction plan, and whether any excess emissions and/or parameter monitoring exceedances are believed to have occurred. Notwithstanding the requirements of the previous sentence, after the effective date of an approved permit program in the State in which an affected source is located, the owner or operator may make alternative reporting arrangements, in advance, with the permitting authority in that State. Procedures governing the arrangement of alternative reporting requirements under this paragraph are specified in § 63.1110(h).

(3) [Reserved]

§ 63.1112 Extension of compliance, and performance test, monitoring, recordkeeping and reporting waivers and alternatives.

(a) *Extension of compliance.* (1) *Extension of compliance with emission standards.* Until an extension of compliance has been granted by the Administrator under this paragraph, the owner or operator of an affected source subject to the requirements of this subpart shall comply with all applicable requirements of this subpart.

(2) *Extension of compliance for early reductions and other reductions.* (i) *Early reductions.* Pursuant to section 112(i)(5) of the Act, if the owner or operator of an existing source demonstrates that the source has achieved a reduction in emissions of hazardous air pollutants in accordance with the provisions of subpart D of this part, the Administrator will grant the owner or operator an extension of compliance with specific requirements of this part, as specified in subpart D of this part.

(ii) *Other reductions.* Pursuant to section 112(i)(6) of the Act, if the owner or operator of an existing source has installed best available control technology (BACT) (as defined in section 169(3) of the Act) or technology required to meet a lowest achievable emission rate (LAER) (as defined in section 171 of the Act) prior to the promulgation of an emission standard in this part applicable to such source and the same pollutant (or stream of pollutants) controlled pursuant to the BACT or LAER installation, the Administrator will grant the owner or operator an extension of compliance with such emission standard that will apply until the date 5 years after the date on which such installation was achieved, as determined by the Administrator.

(3) *Request for extension of compliance.* Paragraphs (a)(4) through (7) of this section concern requests for an extension of compliance with a relevant standard under this part (except requests for an extension of compliance under paragraph (a)(2)(i) of this section will be handled through procedures specified in subpart D of this part).

(4) *Requests for extensions of compliance for section 112 standards.* (i) *Section 112(d) standards.* (A) The owner or operator of an existing source who is unable to comply with a relevant standard established under this part pursuant to section 112(d) of the Act may request that the Administrator grant an extension allowing the source up to 1 additional year to comply with the standard, if such additional period is necessary for the installation of controls. The owner or operator of an affected source who has requested an extension of compliance under this paragraph and who is otherwise required to obtain a title V permit shall apply for such permit or apply to have the source's title V permit revised to incorporate the conditions of the extension of compliance. The conditions of an extension of compliance granted under this paragraph will be incorporated into the affected source's title V permit according to the provisions of part 70 or Federal title V regulations in this chapter (42 U.S.C. 7661), whichever are applicable.

(B) Any request under this paragraph for an extension of compliance with a relevant standard shall be submitted in writing to the appropriate authority not later than 12 months before the affected source's compliance date (as specified in § 63.1102) for sources that are not including emission points in an emissions average, or not later than 18 months before the affected source's compliance date (as specified in § 63.1102) for sources that are including emission points in an emissions average. Emission standards established under this part may specify alternative dates for the submittal of requests for an extension of compliance if alternatives are appropriate for the source categories affected by those standards, e.g., a compliance date specified by the standard is less than 12 (or 18) months after the standard's effective date.

(ii) *Section 112(f) standards.* The owner or operator of an existing source unable to comply with a relevant standard established under this part pursuant to section 112(f) of the Act may request that the Administrator grant an extension allowing the source up to 2 years after the standard's effective date to comply with the standard. The Administrator may grant such an extension if he/she finds that such additional period is necessary for the installation of controls and that steps will be taken during the period of

deadline specified in this subpart or subparts referenced by this subpart. A request for a change to the periodic reporting schedule need only be made once for every schedule change and not once for every semiannual report submitted.

(5) *Alteration of time periods or deadlines.* Notwithstanding time periods or postmark deadlines specified in this subpart for the submittal of information to the Administrator by an owner or operator, or the review of such information by the Administrator, such time periods or deadlines may be changed by mutual agreement between the owner or operator and the Administrator. An owner or operator who wishes to request a change in a time period or postmark deadline for a particular requirement shall request the adjustment in writing as soon as practical before the subject activity is required to take place. The owner or operator shall include in the request whatever information he or she considers useful to convince the Administrator that an adjustment is warranted.

(6) *Approval of request for adjustment.* If, in the Administrator's judgment, an owner or operator's request for an adjustment to a particular time period or postmark deadline is warranted, the Administrator will approve the adjustment. The Administrator will notify the owner or operator in writing of approval or disapproval of the request for an adjustment within 15 calendar days of receiving sufficient information to evaluate the request.

(7) *Notification of delay.* If the Administrator is unable to meet a specified deadline, he or she will notify the owner or operator of any significant delay and inform the owner or operator of the amended schedule.

§ 63.1111 Startup, shutdown, and malfunction.

(a) *Startup, shutdown, and malfunction plan.* (1) *Description and purpose of plan.* The owner or operator of an affected source shall develop and implement a written startup, shutdown, and malfunction plan that describes, in detail, procedures for operating and maintaining the affected source during periods of startup, shutdown, and malfunction. This plan shall also include a program of corrective action for malfunctioning process and air pollution control equipment used to comply with relevant standards under this subpart. The plan shall also address routine or otherwise predictable CPMS malfunctions. This plan shall be developed by the owner or operator by the affected source's compliance date under this subpart. The requirement to develop and implement this plan shall be incorporated into the source's title V permit. This requirement is optional for equipment that must comply with subparts TT or UU under this subpart. It is not optional for equipment equipped with a closed vent system and control device subject to this subpart and subpart SS of this part. The purpose of the startup, shutdown, and malfunction plan is described in paragraphs (a)(1)(i) and (ii) of this section.

(i) To ensure that owners or operators are prepared to correct malfunctions as soon as practical after their occurrence, in order to minimize excess emissions of regulated organic HAP; and

(ii) To reduce the reporting burden associated with periods of startup, shutdown, and malfunction (including corrective action taken to restore malfunctioning process and air pollution control equipment to its normal or usual manner of operation).

(2) *Operation of source.* During periods of startup, shutdown, and malfunction, the owner or operator of an affected source subject to this subpart shall operate and maintain such affected source (including associated air pollution control equipment and CPMS) in accordance with the procedures specified in the startup, shutdown, and malfunction plan developed under paragraph (a)(1) of this section.

(3) *Use of additional procedures.* To satisfy the requirements of this section to develop a startup, shutdown, and malfunction plan, the owner or operator of an affected source may use the affected source's standard operating procedures (SOP) manual, or an Occupational Safety and Health Administration (OSHA) or other plan, provided the alternative plans meet all the requirements of this section and are made available for inspection when requested by the Administrator.

(4) *Revisions to the plan.* Based on the results of a determination made under § 63.1108(b)(3), the Administrator may require that an owner or operator of an affected source make changes to the startup, shutdown, and malfunction plan for that source. The Administrator may require reasonable revisions to a startup, shutdown, and malfunction plan if the Administrator finds that the plan is inadequate as specified in paragraphs (a)(4)(i) through (iv) of this section:

(i) Does not address a startup, shutdown, and malfunction event of the CPMS, the air pollution control equipment, or the affected source that has occurred; or

(ii) Fails to provide for the operation of the affected source (including associated air pollution control equipment and CPMS) during a startup, shutdown, and malfunction event in a manner consistent with good air pollution control practices for minimizing emissions to the extent practical; or

(iii) Does not provide adequate procedures for correcting malfunctioning process and air pollution control equipment as quickly as practicable; or

(iv) Does not provide adequate measures to prevent or minimize excess emissions to the extent practical as specified in § 63.1108(a)(5).

(5) *Additional malfunction plan requirements.* If the startup, shutdown, and malfunction plan fails to address or inadequately addresses an event that meets the characteristics of a malfunction but was not included in the startup, shutdown, and malfunction plan at the time the owner or operator developed the plan, the owner or operator shall revise the startup, shutdown, and malfunction plan within 45 days after the event to include detailed procedures for operating and maintaining the affected source during similar malfunction events and a program of corrective action for similar malfunctions of process or air pollution control equipment or CPMS.

(b) *Startup, shutdown, and malfunction reporting requirements.* (1) *Periodic startup, shutdown, and malfunction reporting requirements.* If actions taken by an owner or operator during a startup, shutdown, and malfunction of an affected source, or of a control device or monitoring system required for compliance (including actions taken to correct a malfunction) are consistent with the procedures specified in the affected source's plan, then the owner or operator shall state such information in a startup, shutdown, and malfunction report. During the reporting period, reports shall only be required for startups, shutdowns, and malfunctions during which excess emissions, as defined in § 63.1108(a)(5), occur during the reporting period. A startup, shutdown, and malfunction report can be submitted as part of a Periodic Report required under § 63.1110(a)(5), or on a more frequent basis if specified otherwise under this subpart or a subpart referenced by this subpart or as established otherwise by the permitting authority in the affected source's title V permit. The startup, shutdown, and malfunction report shall be delivered or postmarked by the 30th day following the end of each calendar half (or other

(2) Identification of the storage vessels subject to this subpart.

(3) Identification of the process vents subject to this subpart.

(4) Identification of the transfer racks subject to this subpart.

(5) For equipment leaks, identification of the process units subject to this subpart.

(6) Identification of other equipment or emission points subject to this subpart.

(7) As an alternative to the requirements specified in paragraphs (c)(1) through (3) and (c)(5) of this section, process units can be identified instead of individual pieces of equipment. For this alternative, the kind of emission point in the process unit that will comply must also be identified.

(d) *Notification of Compliance Status.* (1) *Contents.* The owner or operator shall submit a Notification of Compliance Status for each affected source subject to this subpart containing the information specified in paragraphs (d)(1)(i) and (d)(1)(ii) of this section.

(i) The Notification of Compliance Status shall include the information specified in this subpart and the subparts referenced by this subpart. Alternatively, this information can be submitted as part of a title V permit application or amendment.

(ii) The Notification of Compliance Status shall include a statement from the owner or operator identifying which subpart he or she has elected to comply with, where given a choice, as provided for in § 63.1100(g).

(2) *Due date.* The owner or operator shall submit the Notification of Compliance Status for each affected source 240 days after the compliance date specified for the affected source under this subpart, or 60 days after completion of the initial performance test or initial compliance assessment, whichever is earlier. Notification of Compliance Status reports may be combined for multiple affected sources as long as the due date requirements for all sources covered in the combined report are met.

(e) *Periodic Reports.* The owner or operator of an affected source subject to monitoring requirements of this subpart, or to other requirements of this subpart or subparts referenced by this subpart, where periodic reporting is specified, shall submit a Periodic Report.

(1) *Contents.* Periodic Reports shall include all information specified in this subpart and subparts referenced by this subpart.

(2) *Due date.* The Periodic Report shall be submitted semiannually no later than 60 days after the end of each 6-month period. The first report shall be submitted as specified in paragraph (e)(2)(i) or (ii), as applicable.

(i) The first report shall be submitted no later than the last day of the month that includes the date 8 months (6 months and 60 days) after the date the source became subject to this subpart.

(ii) For affected sources electing to comply with this subpart at initial startup, the first report shall cover the 6 months after the Notification of Compliance Status report is submitted. The first report shall be submitted no later than the last day of the month that includes the date 6 months after the Notification of Compliance Status report is submitted.

(3) *Overlap with title V reports.* Information required by this subpart, which is submitted with a title V periodic report, need not also be included in a subsequent Periodic Report required by this subpart or subpart referenced by this subpart. The title V report shall be referenced in the Periodic Report required by this subpart.

(f) *General report content.* All reports and notifications submitted pursuant to this subpart, including reports that combine information required under this subpart and a subpart referenced by this subpart, shall include the information specified in paragraphs (f)(1) through (4) of this section.

(1) The name, address and telephone number (fax number may also be provided) of the owner or operator.

(2) The name, address and telephone number of the person to whom inquiries should be addressed, if different than the owner or operator.

(3) The address (physical location) of the reporting facility.

(4) Identification of each affected source covered in the submission and identification of the subparts (this subpart and the subparts referenced in this subpart) that are applicable to that affected source. Summaries and groupings of this information are permitted.

(g) *Report and notification submission.* (1) *Submission to the Environmental Protection Agency.* All reports and notifications required under this subpart shall be sent to the appropriate EPA Regional Office and to the delegated State authority, except that request for permission to use an alternative means of emission limitation as provided for in § 63.1113 shall be submitted to the Director of the EPA Office of Air Quality Planning and Standards, U.S. Environmental Protection Agency, MD–10, Research Triangle Park, North Carolina, 27711. The EPA Regional Office may waive the requirement to submit a copy of any reports or notifications at its discretion.

(2) *Submission of copies.* If any State requires a notice that contains all the information required in a report or notification listed in this subpart, an owner or operator may send the appropriate EPA Regional Office a copy of the report or notification sent to the State to satisfy the requirements of this subpart for that report or notification.

(3) *Method of submission.* Wherever this subpart specifies "postmark" dates, submittals may be sent by methods other than the U.S. Mail (e.g., by fax or courier). Submittals shall be sent on or before the specified date.

(4) *Submission by electronic media.* If acceptable to both the Administrator and the owner or operator of an affected source, reports may be submitted on electronic media.

(h) *Adjustment to timing of submittals and review of required communications.* (1) *Alignment with title V submission.* An owner or operator may submit Periodic Reports required by this subpart on the same schedule as the title V periodic report for the facility. The owner or operator using this option need not obtain prior approval, but must ensure that no reporting gaps occur. The owner or operator shall clearly identify the change in reporting schedule in the first report filed under this paragraph. The requirements of paragraph (f) of this section are not waived when implementing this change.

(2) *Establishment of a common schedule.* An owner or operator may arrange by mutual agreement (which may be a standing agreement) with the Administrator a common schedule on which periodic reports required by this subpart shall be submitted throughout the year as long as the reporting period is not extended. Procedures governing the implementation of this provision are specified in paragraphs (h)(3) through (7) of this section.

(3) *Submission requirements.* Except as allowed by paragraph (h)(1) of this section, until an adjustment of a time period or postmark deadline has been approved by the Administrator under paragraphs (h)(5) and (6) of this section, the owner or operator of an affected source remains strictly subject to the required submittal deadlines specified in this subpart and subparts referenced by this subpart.

(4) *Request for adjustment of reporting schedule.* Except as allowed by paragraph (h)(1) of this section, an owner or operator shall request the adjustment provided for in paragraphs (h)(5) and (6) of this section each time he or she wishes to change an applicable time period or postmark

otherwise specified in this subpart or a subpart referenced by this subpart.

(iii) *Operation and maintenance requirements.* The Administrator may determine compliance with the operation and maintenance standards of this subpart by, but not limited to, evaluation of an owner or operator's conformance with operation and maintenance requirements, including the evaluation of monitoring data, as specified in this subpart or a subpart referenced by this subpart.

(5) *Design, equipment, work practice, or operational standards.* The Administrator may determine compliance with design, equipment, work practice, or operational requirements by, but is not limited to, review of records, inspection of the affected source, and by evaluation of an owner or operator's conformance with operation and maintenance requirements as specified in this subpart, and in the subparts referenced by this subpart.

(c) *Finding of compliance.* The Administrator may make a finding concerning an affected source's compliance with an emission standard or operating and maintenance requirement as specified in, but not limited to, paragraphs (a) and (b) of this section, upon obtaining all of the compliance information required by the relevant standard (including the written reports of performance test results, monitoring results, and other information, if applicable) and any information available to the Administrator to determine whether proper operation and maintenance practices are being used. Standards in this subpart and methods of determining compliance are in metric units followed by the equivalents in English units. The Administrator will make findings of compliance with the numerical standards of this subpart using metric units.

(d) *Compliance time.* All terms that define a period of time for completion of required tasks (e.g., weekly, monthly, quarterly, annually), unless specified otherwise in the section or subsection that imposes the requirement, refer to the standard calendar periods.

(1) Notwithstanding time periods specified for completion of required tasks, time periods may be changed by mutual agreement between the owner or operator and the Administrator, as specified in § 63.1110(h). For each time period that is changed by agreement, the revised period shall remain in effect until it is changed. A new request is not necessary for each recurring period.

(2) When the period specified for compliance is a standard calendar period, if the initial compliance date occurs after the beginning of the period, compliance shall be required according to the schedule specified in paragraph (d)(2) (i) or (ii) of this section, as appropriate.

(i) Compliance shall be required before the end of the standard calendar period within which the compliance deadline occurs, if there remain at least 3 days for tasks that must be performed weekly, at least 2 weeks for tasks that must be performed monthly, at least 1 month for tasks that must be performed each quarter, or at least 3 months for tasks that must be performed annually; or

(ii) In all other cases, compliance shall be required before the end of the first full standard calendar period after the period within which the initial compliance deadline occurs.

(3) In all instances where a provision requires completion of a task during each of multiple successive periods, an owner or operator may perform the required task at any time during the specified period, provided the task is conducted at a reasonable interval after completion of the task during the previous period.

§ 63.1109 Recordkeeping requirements.

(a) *Maintaining notifications, records, and reports.* Except as provided in paragraph (b) of this section, the owner or operator of each affected source subject to this subpart shall keep copies of notifications, reports and records required by this subpart and subparts referenced by this subpart for at least 5 years, unless otherwise specified under this subpart.

(b) *Copies of reports.* If the Administrator has waived the requirement of § 63.1110(g)(1) for submittal of copies of reports, the owner or operator is not required to maintain copies of the waived reports. This paragraph applies only to reports and not the underlying records that must be maintained as specified in this subpart and the subparts referenced by this subpart.

(c) *Availability of records.* All records required to be maintained by this subpart or a subpart referenced by this subpart shall be maintained in such a manner that they can be accessed within 2 hours and are suitable for inspection. The most recent 2 years of records shall be retained onsite or shall be accessible to an inspector while onsite. The records of the remaining 3 years, where required, may be retained offsite. Records may be maintained in hard copy or computer-readable form including, but not limited to, on paper, microfilm, computer, computer disk, magnetic tape, or microfiche.

(d) *Control applicability records.* Owners or operators shall maintain records containing information developed and used to assess control applicability under § 63.1103 (e.g., combined total annual emissions of regulated organic HAP).

§ 63.1110 Reporting requirements.

(a) *Required reports.* Each owner or operator of an affected source subject to this subpart shall submit the reports listed in paragraphs (a)(1) through (8) of this section, as applicable.

(1) A Notification of Initial Startup described in paragraph (b) of this section, as applicable.

(2) An Initial Notification described in paragraph (c) of this section.

(3) [Reserved]

(4) A Notification of Compliance Status report described in paragraph (d) of this section.

(5) Periodic Reports described in paragraph (e) of this section.

(6) Application for approval of construction or reconstruction described in § 63.5(d) of subpart A of this part.

(7) Startup, Shutdown, and Malfunction Reports described in § 63.1111 of this subpart.

(8) Other reports. Other reports shall be submitted as specified elsewhere in this subpart and subparts referenced by this subpart.

(b) *Notification of initial startup.* (1) *Contents.* An owner or operator of an affected source for which a notice of initial startup has not been submitted under § 63.5, shall send the Administrator written notification of the actual date of initial startup of an affected source. This paragraph does not apply to an affected source in existence on the effective date of this rule.

(2) *Due date.* The notification of the actual date of initial startup shall be postmarked within 15 days after such date.

(c) *Initial Notification.* Owners or operators of affected sources who are subject to this subpart shall notify the Administrator of the applicability of this subpart by submitting an Initial Notification according to the schedule described in paragraph (c)(1) of this section. The notice shall include the information specified in paragraphs (c)(2) through (7) of this section, as applicable. An application for approval of construction or reconstruction required under § 63.5(d) of subpart A of this part may be used to fulfill the initial notification requirements.

(1) The initial notification shall be postmarked within 1 year after the source becomes subject to this subpart.

an owner or operator and the Administrator do not agree on whether a piece of equipment is not in organic HAP service, however, the procedures in paragraph (a) of this section shall be used to resolve the disagreement.

(c) If an owner or operator determines that a piece of equipment is in organic HAP service, the determination can be revised after following the procedures in paragraph (a) of this section, or by documenting that a change in the process or raw materials no longer causes the equipment to be in organic HAP service.

(d) Samples used in determining the percent organic HAP content shall be representative of the process fluid that is contained in or contacts the equipment.

§ 63.1108 Compliance with standards and operation and maintenance requirements.

(a) *Requirements.* (1) Except as provided in paragraph (a)(2) of this section, the emission limitations and established parameter ranges of this part shall apply at all times except during periods of startup, shutdown, malfunction, or non-operation of the affected source (or specific portion thereof) resulting in cessation of the emissions to which this subpart applies. During periods of startup, shutdown, or malfunction, the owner or operator shall follow the applicable provisions of the startup, shutdown, malfunction plan required by § 63.1111. However, if a startup, shutdown, malfunction or period of non-operation of one portion of an affected source does not affect the ability of a particular emission point to comply with the specific provisions to which it is subject, then that emission point shall still be required to comply with the applicable provisions of this subpart and any of the subparts that are referenced by this subpart during startup, shutdown, malfunction, or period of non-operation.

(2) If equipment leak requirements are referenced by this subpart for a subject source category, such requirements shall apply at all times except during periods of startup, shutdown, or malfunction, process unit shutdown (as defined in § 63.1101), or non-operation of the affected source (or specific portion thereof) in which the lines are drained and depressurized resulting in cessation of the emissions to which the equipment leak requirements apply.

(3) For batch unit operations, shutdown does not include the normal periods between batch cycles; and startup does not include the recharging of batch unit operations, or the transitional conditions due to changes in product.

(4) [Reserved]

(5) During startups, shutdowns, and malfunctions when the emission standards of this subpart and the subparts referenced by this subpart do not apply pursuant to paragraphs (a)(1) through (4) of this section, the owner or operator shall implement, to the extent reasonably available, measures to prevent or minimize excess emissions. The measures to be taken shall be identified in the startup, shutdown, and malfunction plan (if applicable), and may include, but are not limited to, air pollution control technologies, recovery technologies, work practices, pollution prevention, monitoring, and/or changes in the manner of operation of the affected source. Back-up control devices are not required, but may be used if available. Compliance with an inadequate startup, shutdown, and malfunction plan developed pursuant to § 63.1111 is not a shield for failing to comply with good operation and maintenance requirements.

(6) Malfunctions shall be corrected as soon as practical after their occurrence and/or in accordance with the source's startup, shutdown, and malfunction plan developed as specified under § 63.1111.

(7) Operation and maintenance requirements established pursuant to section 112 of the Act are enforceable, independent of emissions limitations or other requirements in relevant standards.

(b) *Compliance assessment procedures.* (1) *Parameter monitoring: compliance with operating conditions.* Compliance with the required operating conditions for the monitored control devices or recovery devices may be determined by, but is not limited to, the parameter monitoring data for emission points that are required to perform continuous monitoring. For each excursion except for excused excursions (as described in § 63.998(b)(6)), and as provided for in paragraph (b)(2) of this section the owner or operator shall be deemed to have failed to have applied the control in a manner that achieves the required operating conditions.

(2) *Parameter monitoring: excursions.* An excursion is not a violation in cases where continuous monitoring is required and the excursion does not count toward the number of excused excursions (as described in § 63.998(b)(6)), if the conditions of paragraphs (b)(2)(i) or (ii) of this section are met. Nothing in this paragraph shall be construed to allow or excuse a monitoring parameter excursion caused by any activity that violates other applicable provisions of this subpart or a subpart referenced by this subpart.

(i) During periods of startup, shutdown, or malfunction (and the source is operated during such periods in accordance with the source's startup, shutdown, and malfunction plan as required by § 63.1111), or

(ii) During periods of non-operation of the affected source or portion thereof (resulting in cessation of the emissions to which the monitoring applies).

(3) *Operation and maintenance procedures.* Determination of whether acceptable operation and maintenance procedures are being used will be based on information available to the Administrator. This information may include, but is not limited to, monitoring results, review of operation and maintenance procedures (including the startup, shutdown, and malfunction plan under § 63.1111), review of operation and maintenance records, and inspection of the affected source, and alternatives approved as specified in § 63.1113.

(4) *Applicability and compliance assessment procedures.* Applicability and compliance with standards shall be governed by, in part, but not limited to, the use of data, tests, and requirements according to paragraphs (b)(4)(i) through (iii) of this section. Compliance with design, equipment, work practice, and operating standards, including those for equipment leaks, shall be determined according to paragraph (b)(5) of this section.

(i) *Applicability assessments.* Unless otherwise specified in a relevant test method required to assess control applicability, each test shall consist of three separate runs using the applicable test method. Each run shall be conducted for the time and under the conditions specified in this subpart. The arithmetic mean of the results of the three runs shall apply when assessing applicability. Upon receiving approval from the Administrator, results of a test run may be replaced with results of an additional test run if it meets the criteria specified in paragraphs (a)(4)(i)(A) through (D) of this section.

(A) A sample is accidentally lost after the testing team leaves the site; or

(B) Conditions occur in which one of the three runs must be discontinued because of forced shutdown; or

(C) Extreme meteorological conditions occur;

(D) Other circumstances occur that are beyond the owner or operator's control.

(ii) *Performance test.* The Administrator may determine compliance with emission limitations of this subpart based on, but not limited to, the results of performance tests conducted according to the procedures specified in § 63.997 of this part, unless

(i) Previous test results, provided the tests are representative of current operating practices at the process unit.

(ii) Bench-scale or pilot-scale test data representative of the process under representative operating conditions.

(iii) Maximum flow rate, TOC emission rate, organic HAP emission rate, organic HAP or TOC concentration, or net heating value limit specified or implied within a permit limit applicable to the process vent.

(iv) Design analysis based on accepted chemical engineering principles, measurable process parameters, or physical or chemical laws or properties. Examples of analytical methods include, but are not limited to those specified in paragraphs (k)(3)(iv)(A) through (k)(3)(iv)(D) of this section:

(A) Use of material balances based on process stoichiometry to estimate maximum TOC or organic HAP concentrations.

(B) Estimation of maximum flow rate based on physical equipment design such as pump or blower capacities.

(C) Estimation of TOC or organic HAP concentrations based on saturation conditions, and

(D) Estimation of maximum expected net heating value based on the stream concentration of each organic compound or, alternatively, as if all TOC in the stream were the compound with the highest heating value.

(4) All data, assumptions, and procedures used in the engineering assessment shall be documented. The owner or operator shall maintain the records specified in paragraphs (l)(1) through (4) of this section, as applicable.

(l) *Applicability assessment recordkeeping requirements.* (1) *TRE index value records.* The owner or operator shall maintain records of measurements, engineering assessments, and calculations performed to determine the TRE index value of the process vent according to the procedures of paragraph (j) of this section, including those records associated with halogen vent stream determination. Documentation of engineering assessments shall include all data, assumptions, and procedures used for the engineering assessments, as specified in paragraph (k) of this section. As specified in paragraph (m) of this section, the owner or operator shall include this information in the Notification of Compliance Status report required by § 63.1110(a)(4).

(2) *Flow rate records.* The owner or operator shall record the flow rate as measured using the sampling site and flow rate determination procedures (if applicable) specified in paragraphs (b) and (f) of this section or determined through engineering assessment as specified in paragraph (k) of this section. As specified in paragraph (m) of this section, the owner or operator shall include this information in the Notification of Compliance Status report required by § 63.1110(a)(4).

(3) *Concentration records.* The owner or operator shall record the regulated organic HAP or TOC concentration (if applicable) as measured using the sampling site and regulated organic HAP or TOC concentration determination procedures specified in paragraphs (e)(1) and (2) of this section, or determined through engineering assessment as specified in paragraph (k) of this section. As specified in paragraph (m) of this section, the owner or operator shall include this information in the Notification of Compliance Status report required by § 63.1110(a)(4).

(4) *Process change records.* The owner or operator shall keep up-to-date, readily accessible records of any process changes that change the control applicability for a process vent. Records are to include any recalculation or measurement of the flow rate, regulated organic HAP or TOC concentration, and TRE index value.

(m) *Applicability assessment reporting requirements.* (1) *Notification of Compliance Status.* The owner or operator shall submit, as part of the Notification of Compliance Status report required by § 63.1110(a)(4), the information recorded in paragraph (l)(1) through (3) of this section.

(2) *Process change.* (i) Whenever a process vent becomes subject to control requirements under subpart SS of this part as a result of a process change, the owner or operator shall submit a report within 60 days after the performance test or applicability assessment, whichever is sooner. The report may be submitted as part of the next Periodic Report required by § 63.1110(a)(5). The report shall include the information specified in paragraphs (m)(2)(i)(A) through (C) of this section.

(A) A description of the process change;

(B) The results of the recalculation of the TOC or organic HAP concentration, flow rate, and/or TRE index value required under paragraphs (e), (f), and (j), and recorded under paragraph (l); and

(C) A statement that the owner or operator will comply with the requirements specified in § 63.1103 by the schedules specified in that section for the affected source.

(ii) If a performance test is required as a result of a process change, the owner or operator shall specify that the performance test has become necessary due to a process change. This specification shall be made in the performance test notification to the Administrator, as specified in § 63.999(a)(1).

(iii) If a process change does not result in additional applicable requirements, then the owner or operator shall include a statement documenting this in the next Periodic Report required by § 63.1110(a)(5) after the process change was made.

(n) *Parameter monitoring of certain process vents.* An owner or operator who maintains a TRE index value (if applicable) in the applicable TRE index value monitoring range as specified in an applicable table presented in § 63.1103 of this subpart without using a recovery device shall report a description of the parameter(s) to be monitored to ensure the process vent is operated in conformance with its design or process and achieves and maintains the TRE index value above the specified level, and an explanation of the criteria used to select parameter(s). An owner or operator who maintains a TRE index value (if applicable) in the applicable TRE index monitoring range as specified in an applicable table presented in § 63.1103 of this subpart by using a recovery device shall comply with the requirements of § 63.993(c).

§ 63.1105 [Reserved]

§ 63.1106 [Reserved]

§ 63.1107 Equipment leaks: applicability assessment procedures and methods.

(a) Each piece of equipment within a process unit that can reasonably be expected to contain equipment in organic HAP service is presumed to be in organic HAP service unless an owner or operator demonstrates that the piece of equipment is not in organic HAP service. For a piece of equipment to be considered not in organic HAP service, it must be determined that the percent organic HAP content can be reasonably expected not to exceed the percent by weight control applicability criteria specified in § 63.1103 for an affected source on an annual average basis. For purposes of determining the percent organic HAP content of the process fluid that is contained in or contacts equipment, Method 18 of 40 CFR part 60, appendix A shall be used.

(b) An owner or operator may use good engineering judgment rather than the procedures in paragraph (a) of this section to determine that the percent organic HAP content does not exceed the percent by weight control applicability criteria specified in § 63.1103 for an affected source. When

$$TRE = 1/E_{HAP} * [A + B(Q_s) + C(H_T) + D(E_{TOC})] \quad \text{[Eq. 5]}$$

Where:

TRE = TRE index value.

A, B, C, D = Coefficients presented in table 8 of this subpart.

E_{HAP} = Emission rate of total organic HAP, kilograms per hour, as calculated according to paragraph (h) or (k) of this section.

Q_s = process vent flow rate, standard cubic meters per minute, at a standard temperature of 20° C, as calculated according to paragraph (f) or (k) of this section.

H_T = process vent net heating value, megaJoules per standard cubic meter, as calculated according to paragraph (g) or (k) of this section.

E_{TOC} = Emission rate of TOC (minus methane and ethane), kilograms per hour, as calculated according to paragraph (h) or (k) of this section.

TABLE 1 OF § 63.1104(j)(1).—COEFFICIENTS FOR TOTAL RESOURCE EFFECTIVENESS [a]

Existing or new?	Halogenated vent stream?	Control device basis	Values of coefficients			
			A	B	C	D
Existing	Yes	Thermal Incinerator and Scrubber.	3.995	5.200×10^{-2}	-1.769×10^{-3}	9.700×10^{-4}
	No	Flare	1.935	3.660×10^{-1}	-7.687×10^{-3}	-7.33×10^{-4}
		Thermal Incinerator 0 Percent Recovery	1.492	6.267×10^{-2}	3.177×10^{-2}	-1.159×10^{-3}
		Thermal Incinerator 70 Percent Recovery	2.519	1.183×10^{-2}	1.300×10^{-2}	4.790×10^{-2}
New	Yes	Thermal Incinerator and Scrubber.	1.0895	1.417×10^{-2}	-4.82×10^{-3}	2.645×10^{-3}
	No	Flare	5.276×10^{-1}	9.98×10–2^{-2}	-2.096×10^{-3}	-2.000×10^{-4}
		Thermal Incinerator 0 Percent Recovery	4.068×10^{-1}	1.71×10^{-2}	8.664×10^{-3}	-3.16×10^{-4}
		Thermal Incinerator 70 Percent Recovery	6.868×10^{-1}	3.21×10^{-3}	3.546×10^{-3}	1.306×10^{-2}

[a] Use according to procedures outlined in this section.
MJ/scm = Mega Joules per standard cubic meter
scm/min = Standard cubic meters per minute

(2) *Nonhalogenated process vents.* The owner or operator of a nonhalogenated process vent shall calculate the TRE index value by using the equation and appropriate nonhalogenated process vent parameters in table 1 of this section for process vents at existing and new sources. The lowest TRE index value is to be selected.

(3) *Halogenated process vents.* The owner or operator of a halogenated process vent stream, as determined according to procedures specified in paragraph (i) or (k) of this section, shall calculate the TRE index value using the appropriate halogenated process vent parameters in table 1 of this section for existing and new sources.

(k) *Engineering assessment.* For purposes of TRE index value determinations, engineering assessments may be used to determine process vent flow rate, net heating value, TOC emission rate, and total organic HAP emission rate for the representative operating condition expected to yield the lowest TRE index value. Engineering assessments shall meet the requirements of paragraphs (k)(1) through (4) of this section. If process vent flow rate or process vent organic HAP or TOC concentration is being determined for comparison with the 0.011 standard cubic meters per minute (scmm) flow rate or the applicable concentration value presented in the tables in § 63.1103, engineering assessment may be used to determine the flow rate or concentration for the representative operating condition expected to yield the highest flow rate or concentration.

(1) If the TRE index value calculated using such engineering assessment and the TRE index value equation in paragraph (j) of this section is greater than 4.0, then the owner or operator is not required to perform the measurements specified in paragraphs (e) through (i) of this section.

(2) If the TRE index value calculated using such engineering assessment and the TRE index value equation in paragraph (j) of this section is less than or equal to 4.0, then the owner or operator is required either to perform the measurements specified in paragraphs (e) through (i) of this section for control applicability assessment or comply with the requirements (or standards) specified in the tables presented in § 63.1103 (as applicable).

(3) Engineering assessment includes, but is not limited to, the examples specified in paragraphs (k)(3)(i) through (iv) of this section:

volumetric flow shall be corrected to 2.3 percent moisture; or

(2) The engineering assessment procedures in paragraph (k) of this section can be used for determining volumetric flow rates.

(g) *Heating value.* The net heating value shall be determined as specified in paragraphs (g)(1) and (2) of this section, or by using the engineering assessment procedures in paragraph (k) of this section.

(1) The net heating value of the process vent shall be calculated using Equation 2:

$$H_T = K_1\left(\sum_{j=1}^{n} D_j H_j\right) \qquad \text{[Eq. 2]}$$

Where:

H_T = Net heating value of the sample, megaJoule per standard cubic meter, where the net enthalpy per mole of process vent is based on combustion at 25° C and 760 millimeters of mercury, but the standard temperature for determining the volume corresponding to 1 mole is 20° C, as in the definition of Q_s (process vent volumetric flow rate).

K_1 = Constant, 1.740×10^{-7} (parts per million)$^{-1}$(gram-mole per standard cubic meter) (megaJoule per kilocalorie), where standard temperature for (gram-mole per standard cubic meter) is 20° C.

Dj = Concentration on a wet basis of compound j in parts per million, as measured by procedures indicated in paragraph (e)(2) of this section. For process vents that pass through a final stream jet and are not condensed, the moisture is assumed to be 2.3 percent by volume.

H_j = Net heat of combustion of compound j, kilocalorie per gram-mole, based on combustion at 25° C and 760 millimeters mercury.

(2) The molar composition of the process vent (D_j) shall be determined using the methods specified in paragraphs (g)(2)(i) through (iii) of this section:

(i) Method 18 of 40 CFR part 60, appendix A to measure the concentration of each organic compound.

(ii) American Society for Testing and Materials D1946–90 to measure the concentration of carbon monoxide and hydrogen.

(iii) Method 4 of 40 CFR part 60, appendix A to measure the moisture content of the stack gas.

(h) *TOC or Organic HAP emission rate.* The emission rate of TOC (minus methane and ethane) (E_{TOC}) and the emission rate of the regulated organic HAP or total organic HAP (E_{HAP}) in the process vent, as required by the TRE index value equation specified in paragraph (j) of this section, shall be calculated using Equation 3:

$$E = K_2\left(\sum_{j=1}^{n} C_j M_j\right) Q_s \qquad \text{[Eq. 3]}$$

Where:

E = Emission rate of TOC (minus methane and ethane) (E_{TOC}) or emission rate of the regulated organic HAP or total organic HAP (E_{HAP}) in the sample, kilograms per hour.

K_2 = Constant, 2.494×10^{-6} (parts per million)$^{-1}$ (gram-mole per standard cubic meter) (kilogram/gram) (minutes/hour), where standard temperature for (gram-mole per standard cubic meter) is 20° C.

n = Number of components in the sample.

C_j = Concentration on a dry basis of organic compound j in parts per million as measured by method 18 of 40 CFR part 60, appendix A as indicated in paragraph (e) of this section. If the TOC emission rate is being calculated, C_j includes all organic compounds measured minus methane and ethane; if the total organic HAP emission rate is being calculated, only organic HAP compounds are included; if the regulated organic HAP emission rate is being calculated, only regulated organic HAP compounds are included.

M_j = Molecular weight of organic compound j, gram/gram-mole.

Q_s = Process vent flow rate, dry standard cubic meter per minute, at a temperature of 20° C.

(i) *Halogenated process vent determination.* In order to determine whether a process vent is halogenated, the mass emission rate of halogen atoms contained in organic compounds shall be calculated according to the procedures specified in paragraphs (i)(1) and (2) of this section. A process vent is considered halogenated if the mass emission rate of halogen atoms contained in the organic compounds is equal to or greater than 0.45 kilograms per hour.

(1) The process vent concentration of each organic compound containing halogen atoms (parts per million by volume, by compound) shall be determined based on one of the procedures specified in paragraphs (i)(1)(i) through (iv) of this section:

(i) Process knowledge that no halogen or hydrogen halides are present in the process vent, or

(ii) Applicable engineering assessment as discussed in paragraph (k) of this section, or

(iii) Concentration of organic compounds containing halogens or hydrogen halides as measured by Method 26 or 26A of 40 CFR part 60, appendix A, or

(iv) Any other method or data that have been validated according to the applicable procedures in method 301 of appendix A of this part.

(2) Equation 4 shall be used to calculate the mass emission rate of halogen atoms:

$$E = K_2 Q\left(\sum_{j=1}^{n}\sum_{i=1}^{m} C_j * L_{j,i} * M_{j,i}\right) \qquad \text{[Eq. 4]}$$

Where:

E = Mass of halogen atoms, dry basis, kilogram per hour.

K_2 = Constant, 2.494×10^{-6} (parts per million)$^{-1}$ (kilogram-mole per standard cubic meter) (minute per hour), where standard temperature is 20° C.

Q = Flow rate of gas stream, dry standard cubic meters per minute, determined according to paragraph (f)(1) or (f)(2) of this section.

n = Number of halogenated compounds j in the gas stream.

j = Halogenated compound j in the gas stream.

m = Number of different halogens i in each compound j of the gas stream.

i = Halogen atom i in compound j of the gas stream.

C_j = Concentration of halogenated compound j in the gas stream, dry basis, parts per million by volume.

L_{ji} = Number of atoms of halogen i in compound j of the gas stream.

M_{ji} = Molecular weight of halogen atom i in compound j of the gas stream, kilogram per kilogram-mole.

(j) *TRE index value.* The owner or operator shall calculate the TRE index value of the process vent using the equations and procedures in this paragraph, as applicable, and shall maintain records specified in paragraph (l)(1) or (m)(2) of this section, as applicable.

(1) *TRE index value equation.* The equation for calculating the TRE index value is Equation 5:

(3) *Sampling site selection method.* Method 1 or 1A of 40 CFR part 60, appendix A, as appropriate, shall be used for selection of the sampling site. No traverse site selection method is needed for process vents smaller than 0.10 meter (0.33 foot) in nominal inside diameter.

(4) *Sampling site when a halogen reduction device is used prior to a combustion device.* An owner or operator using a scrubber to reduce the process vent halogen atom mass emission rate to less than 0.45 kilograms per hour (0.99 pound per hour) prior to a combustion control device in compliance with § 63.1103 (as appropriate) shall determine the halogen atom mass emission rate prior to the combustion device according to the procedures in paragraph (i) of this section.

(c) *Applicability assessment requirement.* The TOC or organic HAP concentrations, process vent volumetric flow rates, process vent heating values, process vent TOC or organic HAP emission rates, halogenated process vent determinations, process vent TRE index values, and engineering assessment process vent control applicability assessment requirements are to be determined during maximum representative operating conditions for the process, except as provided in paragraph (d) of this section, or unless the Administrator specifies or approves alternate operating conditions. Operations during periods of startup, shutdown, and malfunction shall not constitute representative conditions for the purpose of an applicability test.

(d) *Exceptions.* For a process vent stream that consists of at least one process vent from a batch unit operation manifolded with at least one process vent from a continuous unit operation, the TRE shall be calculated during periods when one or more batch emission episodes are occurring that result in the highest organic HAP emission rate (in the combined vent stream that is being routed to the recovery device) that is achievable during the 6-month period that begins 3 months before and ends 3 months after the TRE calculation, without causing any of the situations described in paragraphs (d)(1) through (3) to occur.

(1) Causing damage to equipment;

(2) Necessitating that the owner or operator make product that does not meet an existing specification for sale to a customer; or

(3) Necessitating that the owner or operator make produce in excess of demand.

(e) *TOC or Organic HAP concentration.* The TOC or organic HAP concentrations, used for TRE index value calculations in paragraph (j) of this section, shall be determined based on paragraph (e)(1), (e)(2) or (k) of this section, or any other method or data that have been validated according to the protocol in method 301 of appendix A of this part. For concentrations needed for comparison with the appropriate control applicability concentrations specified in § 63.1103, TOC or organic HAP concentration shall be determined based on paragraph (e)(1), (e)(2), or (k) of this section or any other method or data that has been validated according to the protocol in method 301 of appendix A of this part. The owner or operator shall record the TOC or organic HAP concentration as specified in paragraph (l)(3) of this section.

(1) *Method 18.* The procedures specified in paragraph (e)(1)(i) and (ii) of this section shall be used to calculate parts per million by volume concentration using method 18 of 40 CFR part 60, appendix A:

(i) The minimum sampling time for each run shall be 1 hour in which either an integrated sample or four grab samples shall be taken. If grab sampling is used, then the samples shall be taken at approximately equal intervals in time, such as 15-minute intervals during the run.

(ii) The concentration of either TOC (minus methane and ethane) or regulated organic HAP emissions shall be calculated according to paragraph (e)(1)(ii)(A) or (B) of this section, as applicable.

(A) The TOC concentration (C_{TOC}) is the sum of the concentrations of the individual components and shall be computed for each run using Equation 1:

$$C_{TOC} = \frac{\sum_{i=1}^{x}\left(\sum_{j=1}^{n} C_{ji}\right)}{x} \qquad \text{[Eq. 1]}$$

Where:

C_{TOC} = Concentration of TOC (minus methane and ethane), dry basis, parts per million by volume.

C_{ji} = Concentration of sample component j of the sample i, dry basis, parts per million by volume.

n = Number of components in the sample.

x = Number of samples in the sample run.

(B) The regulated organic HAP or total organic HAP concentration (C_{HAP}) shall be computed according to Equation 1 in paragraph (e)(1)(ii)(A) of this section except that only the regulated or total organic HAP species shall be summed, as appropriate.

(2) *Method 25A.* The procedures specified in paragraphs (e)(2)(i) through (vi) of this section shall be used to calculate parts per million by volume concentration using Method 25A of 40 CFR part 60, appendix A.

(i) Method 25A of 40 CFR part 60, appendix A shall be used only if a single organic HAP compound comprises greater than 50 percent of total organic HAP or TOC, by volume, in the process vent.

(ii) The process vent composition may be determined by either process knowledge, test data collected using an appropriate Environmental Protection Agency method or a method or data validated according to the protocol in Method 301 of appendix A of part 63. Examples of information that could constitute process knowledge include calculations based on material balances, process stoichiometry, or previous test results provided the results are still relevant to the current process vent conditions.

(iii) The organic compound used as the calibration gas for Method 25A of 40 CFR part 60, appendix A shall be the single organic HAP compound present at greater than 50 percent of the total organic HAP or TOC by volume.

(iv) The span value for Method 25A of 40 CFR part 60, appendix A shall be equal to the appropriate control applicability concentration value specified in the applicable table(s) presented in § 63.1103 of this subpart.

(v) Use of Method 25A of 40 CFR part 60, appendix A is acceptable if the response from the high-level calibration gas is at least 20 times the standard deviation of the response from the zero calibration gas when the instrument is zeroed on the most sensitive scale.

(vi) The owner or operator shall demonstrate that the concentration of TOC including methane and ethane measured by Method 25A of 40 CFR part 60, appendix A is below one-half the appropriate control applicability concentration specified in the applicable table for a subject source category in § 63.1103 in order to qualify for a low organic HAP concentration exclusion.

(f) *Volumetric flow rate.* The process vent volumetric flow rate (Q_S), in standard cubic meters per minute at 20 °C, shall be determined as specified in paragraphs (f)(1) or (2) of this section and shall be recorded as specified in § 63.1109.

(1) Use Method 2, 2A, 2C, or 2D of 40 CFR part 60, appendix A, as appropriate. If the process vent tested passes through a final steam jet ejector and is not condensed, the stream

TABLE 6. TO § 63.1103(d)—WHAT ARE MY REQUIREMENTS IF I OWN OR OPERATE A POLYCARBONATE PRODUCTION NEW AFFECTED SOURCE?—Continued

If you own or operate . . .	And if . . .	Then you must . . .
4. A process vent from continuous unit operations or a combined vent stream[a].	The vent stream has a a TRE[b],[c] ≤ 9.6	a. Reduce emissions of total organic HAP by 98 weight-percent; or reduce total organic HAP to a concentration of 20 parts per million by volume; whichever is less stringent, by venting emissions through a closed vent system to any combination of control devices meeting the requirements of subpart SS, as specified in § 63.982(a)(2) (process vent requirements) of this part and vent emissions through a closed vent system to a halogen reduction device meeting the requirements of subpart SS, § 63.994, of this part that reduces hydrogen halides and halogens by 99 weight-percent or to less than 0.45 kilograms per hourd, whichever is less stringent; or b. Reduce the process vent halogen atom mass emission rate to less than 0.45 kilograms per hour by venting emissions through a closed vent system to a halogen reduction device meeting the requirements of subpart SS, § 63.994 (halogen reduction device requirements) of this part and reduce emissions of total organic HAP by 98 weight-percent; or reduce total organic HAP or TOC to a concentration of 20 parts per million by volume; whichever is less stringent, by venting emissions through a closed vent system to any combination of control devices meeting the requirements of subpart SS, as specified in § 63.982(a)(2) (process vent requirements) of this part; or c. Achieve and maintain a TRE index value greater than 9.6
5. Equipment as defined under § 63.1101	The equipment contains or contacts ≥ 5 weight-percent HAPe, and operates ≥ 300 hours per year.	Comply with the requirements of 40 CFR subpart TT (national emission standards for equipment leaks (control level 1)) or subpart UU (national emission standards for equipment leaks (control level 2)) of this part.

[a] Combined vent streams shall use the applicability determination procedures and methods for process vents from continuous unit operations (§ 63.1104).

[b] The TRE equation coefficients for halogenated streams (table 1 of § 63.1104(j)(1)) shall be used to calculate the TRE index value.

[c] The TRE is determined according to the procedures specified in § 63.1104(j). If a dryer is manifolded with such vents, and the vent is routed to a recovery, recapture, or combustion device, then the TRE index value for the vent must be calculated based on the properties of the vent stream (including the contributions of the dryer). If a dryer is manifolded with other vents and not routed to a recovery, recapture, or combustion device, then the TRE index value must be calculated excluding the contributions of the dryer. The TRE index value for the dryer must be calculated separately in this case.

[d] The mass emission rate of halogen atoms contained in organic compounds is determined according to the procedures specified in § 63.1104(i).

[e] The weight-percent organic HAP is determined for equipment according to procedures specified in § 63.1107.

§ 63.1104 Process vents from continuous unit operations: applicability assessment procedures and methods.

(a) *General.* The provisions of this section provide calculation and measurement methods for criteria that are required by § 63.1103 to be used to determine applicability of the control requirements for process vents from continuous unit operations. The owner or operator of a process vent is not required to determine the criteria specified for a process vent that is being controlled in accordance with the applicable weight-percent or TOC concentration requirement in § 63.1103.

(b) *Sampling sites.* For purposes of determining process vent applicability criteria, the sampling site shall be located as specified in (b)(1) through (4) of this section, as applicable.

(1) *Sampling site location if TRE determination is required.* If the applicability criteria specified in the applicable table of § 63.1103 includes a TRE index value, the sampling site for determining volumetric flow rate, regulated organic HAP concentration, total organic HAP or TOC concentration, heating value, and TRE index value, shall be after the final recovery device (if any recovery devices are present) but prior to the inlet of any control device that is present, and prior to release to the atmosphere.

(2) *Sampling site location if TRE determination is not required.* If the applicability criteria specified in the applicable table of § 63.1103 does not include a TRE index value, the sampling site for determining volumetric flow rate, regulated organic HAP concentration, total organic HAP or TOC concentration, and any other specified parameter shall be at the exit from the unit operation before any control device.

TABLE 5 TO § 63.1103(d)—WHAT ARE MY REQUIREMENTS IF I OWN OR OPERATE A POLYCARBONATE PRODUCTION EXISTING AFFECTED SOURCE?—Continued

If you own or operate . . .	And if . . .	Then you must . . .
5. A process vent from continuous unit operations or a combined vent stream[a].	2.7 < TRE[b,c] ≤ 4.0	Monitor and keep records of equipment operating parameters specified to be monitored under subpart SS, §§ 63.990(c) (absorber, condenser, and carbon adsorber monitoring) or 63.995(c) (other noncombustion systems used as a control device monitoring) of this part.
6. Equipment as defined under § 63.1101	The equipment contains or contacts ≥5 weight-percent total organic HAP[d], and operates ≥300 hours per year.	Comply with the requirements of subpart TT (national emission standards for equipment leaks (control level 1)) or subpart UU (national emission standards for equipment leaks (control level 2)) of this part.

[a] Combined vent streams shall use the applicability determination procedures and methods for process vents from continuous unit operations (§ 63.1104).

[b] The TRE equation coefficients for halogenated streams (table 1 of § 63.1104(j)(1)) shall be used to calculate the TRE index value.

[c] The TRE is determined according to the procedures specified in § 63.1104(j). If a dryer is manifolded with such vents, and the vent is routed to a recovery, recapture, or combustion device, then the TRE index value for the vent must be calculated based on the properties of the vent stream (including the contributions of the dryer). If a dryer is manifolded with other vents and not routed to a recovery, recapture, or combustion device, then the TRE index value must be calculated excluding the contributions of the dryer. The TRE index value for the dryer must be calculated separately in this case.

[d] The mass emission rate of halogen atoms contained in organic compounds is determined according to the procedures specified in § 63.1104(i).

[e] The weight-percent organic HAP is determined for equipment according to procedures specified in § 63.1107.

TABLE 6. TO § 63.1103(d)—WHAT ARE MY REQUIREMENTS IF I OWN OR OPERATE A POLYCARBONATE PRODUCTION NEW AFFECTED SOURCE?

If you own or operate . . .	And if . . .	Then you must . . .
1. A storage vessel with: 38 cubic meters ≤ capacity < 151 cubic meters.	13.1 kilopascals ≤ maximum true vapor pressure of total organic HAP < 76.6 kilopascalsa.	a. Reduce emissions of total organic HAP by 95 weight-percent by venting emissions through a closed vent system to any combination of control devices meeting the requirements of subpart SS (national emission standards for closed vent systems, control devices, recovery devices, and routing to a fuel gas system or a process), as specified in § 63.982(a)(1) (storage vessel requirements) of this part; or b. Comply with the requirements of subpart WW (national emission standards for storage vessels (control level 2)) of this part.
2. A storage vessel with: 151 cubic meters ≥capacity.	The vapor pressure of total organic HAP is ≥ 5.2 kilopascals.	Reduce emissions of total organic HAP by 98 weight-percent by venting emissions through a closed vent system to any combination of control devices meeting the requirements of subpart SS, as specified in § 63.982(a)(1) (storage vessel requirements) of this part.
3. A storage vessel with: 38 cubic meters ≤ capacity < 151 cubic meters.	The vapor pressure of total organic HAP is ≥ 76.6 kilopascals.	Reduce emissions of total organic HAP by 95 weight-percent by venting emissions through a closed vent system to any combination of control devices meeting the requirements of subpart SS, as specified in § 63.982(a)(1) (storage vessel requirements) of this part.

assessment procedures if they opt to comply with the most stringent requirements for an applicable emission point pursuant to this subpart. General compliance, recordkeeping, and reporting requirements are specified in §§ 63.1108 through 63.1112. Procedures for approval of alternative means of emission limitations are specified in § 63.1113.

TABLE 5 TO § 63.1103(d)—WHAT ARE MY REQUIREMENTS IF I OWN OR OPERATE A POLYCARBONATE PRODUCTION EXISTING AFFECTED SOURCE?

If you own or operate . . .	And if . . .	Then you must . . .
1. A storage vessel with: 75 cubic meters ≤ capacity < 151 cubic meters.	27.6 kilopascals ≤ maximum true vapor pressure of total organic HAP < 76.6 kilopascals.	Reduce emissions of total organic HAP by 95 weight-percent by venting emissions through a closed vent system to any combination of control devices meeting the requirements of subpart SS (national emission standards for closed vent systems, control devices, recovery devices, and routing to a fuel gas system or a process), as specified in § 63.982(a)(1) (storage vessel requirements) of this part; or comply with the requirements of subpart WW (national emission standards for storage vessels (control level 2)) of this part.
2. A storage vessel with: 151 cubic meters ≤ capacity.	The maximum true vapor pressure of total organic HAP ≥ 5.2 kilopascals.	Reduce emissions of total organic HAP by 98 weight-percent by venting emissions through a closed vent system to any combination of control devices meeting the requirements of subpart SS, as specified in § 63.982(a)(1) (storage vessel requirements) of this part
3. A storage vessel with: 75 cubic meters ≤ capacity < 151 cubic meters.	The maximum true vapor pressure of total organic HAP ≥ 76.6 kilopascals.	Reduce emissions of total organic HAP by 95 weight-percent by venting emissions through a closed vent system to any combination of control devices meeting the requirements of subpart SS, as specified in § 63.982(a)(1) (storage vessel requirements) of this part.
4. A process vent from continuous unit operations or a combined vent stream[a].	The vent stream has a TRE[b,c] ≤ 2.7	a. Reduce emissions of total organic HAP by 98 weight-percent; or reduce total organic HAP to a concentration of 20 parts per million by volume; whichever is less stringent, by venting emissions through a closed vent system to any combination of control devices meeting the requirements of subpart SS, as specified in § 63.982(a)(2) (process vent requirements) of this part and vent emissions through a closed vent system to a halogen reduction device meeting the requirements of subpart SS, § 63.994, of this part, that reduces hydrogen halides and halogens by 99 weight-percent or to less than 0.45 kilograms per hour[d], whichever is less stringent; or b. Reduce the process vent halogen atom mass emission rate to less than 0.45 kilograms per hour by venting emissions through a closed vent system to a halogen reduction device meeting the requirements of subpart SS, § 63.994 (halogen reduction device requirements) of this part and reduce emissions of total organic HAP by 98 weight-percent; or reduce total organic HAP or TOC to a concentration of 20 parts per million by volume; whichever is less stringent, by venting emissions through a closed vent system to any combination of control devices meeting the requirements of subpart SS, as specified in § 63.982(a)(2) (process vent requirements) of this part; or c. Achieve and maintain a TRE index value greater than 2.7.
.....		

TABLE 4. TO § 63.1103(C)—WHAT ARE MY REQUIREMENTS IF I OWN OR OPERATE A HYDROGEN FLUORIDE PRODUCTION EXISTING OR NEW AFFECTED SOURCE?—Continued

If you own or operate . . .	And if . . .	Then you must . . .
3. A transfer rack	The transfer rack is associated with bulk hydrogen fluoride liquid loading into tank trucks and rail cars.	Reduce emissions of hydrogen fluoride by venting emissions through a closed-vent system to a recovery system or wet scrubber that is designed and operated to achieve a 99 weight-percent removal efficiency. Monitoring, recordkeeping, and reporting of wet scrubber operation shall be in accordance with the requirements stated above for a wet scrubber controlling HF emissions from a storage vessel. You also must load hydrogen fluoride into only tank trucks and railcars that have a current certification in accordance with the U.S. DOT pressure test requirements of 49 CFR part 180 for tank trucks and 49 CFR 173.31 for railcars; or have been demonstrated to be vapor-tight (i.e. will sustain a pressure change of not more than 750 Pascals within 5 minutes after it is pressurized to a minimum or 4,500 Pascals) within the preceding 12 months.
4. Equipment	It is in hydrogen fluoride service and operates ≥ 300 hours per year and is not in vacuum service.	Control hydrogen fluoride emissions by using leakless pumps and by implementing a sensory monitoring leak detection program. Equipment that is excluded from sensory monitoring because it operates less than 300 hours per year or is in vacuum service shall be identified by list, location, or other method and the identity shall be recorded. An owner or operator is required to perform sensory monitoring at least once every shift, but no later than within 15 days. When a leak is detected, repair must begin within one hour and be completed as soon as practical. A record shall be kept of each leak detected and repaired including: equipment identification number, date and time the leak was detected and that repair was initiated, and the date of successful repair.

(d) *Polycarbonate production applicability, definitions, and requirements.*

(1) *Applicability.*

(i) *Affected source.* For the polycarbonate production (as defined in paragraph (d)(2) of this section) source category, the affected source shall comprise all emission points, in combination, listed in paragraphs (d)(1)(i)(A) through (D) of this section, that are part of a polycarbonate production process unit located at a major source as defined in section 112(a) of the Act. For the purposes of this rule, a polycarbonate production process unit is a unit that produces polycarbonate by interfacial polymerization from bisphenols and phosgene. Phosgene production units that are associated with polycarbonate production process units are considered to be part of the polycarbonate production process. A phosgene production unit consists of the reactor in which phosgene is formed and all equipment (listed in paragraphs (d)(1)(i)(A) through (D) of this section) downstream of the reactor that provides phosgene for the production of polycarbonate. Therefore, for the purposes of this rule, such a phosgene production unit is considered to be a polycarbonate production process unit.

(A) All storage vessels that store liquids containing organic HAP.

(B) All process vents from continuous and batch unit operations.

(C) All wastewater streams.

(D) Equipment (as defined in § 63.1101 of this subpart) that contains or contacts organic HAP.

(ii) *Compliance schedule.* The compliance schedule, for affected sources as defined in paragraph (d)(1)(i) of this section, is specified in § 63.1102(a).

(2) *Definitions.*

Polycarbonate production means a process engaged in the production of a special class of polyester formed from any dihydroxy compound and any carbonate diester or by ester exchange. Polycarbonate may be produced by solution or emulsion polymerization, although other methods may be used. A typical method for the manufacture of polycarbonate includes the reaction of bisphenol-A with phosgene in the presence of pyridine or other catalyst to form polycarbonate. Methylene chloride or other solvents are used in this polymerization reaction.

(3) *Requirements.* Tables 5 and 6 of this section specify the applicability criteria and standards for existing and new sources within the polycarbonate production source category. The owner or operator must control organic HAP emissions from each affected source emission point by meeting the applicable requirements specified in tables 5 and 6. Applicability assessment procedures and methods are specified in §§ 63.1104 through 63.1107. An owner or operator of an affected source is not required to perform tests, TRE calculations or other applicability

actuated shaft penetrating the pump housing.

Open-ended valve or line means any valve, except relief valves, having one side of the valve seat in contact with process fluid and one side open to the atmosphere, either directly or through open piping.

Pressure release means the emission of materials resulting from the system pressure being greater than the set pressure of the relief device. This release can be one release or a series of releases over a short time period due to a malfunction in the process.

Pressure relief device or valve means a safety device used to prevent operating pressures from exceeding the maximum allowable working pressure of the process equipment. A common pressure relief device is a spring-loaded pressure relief valve. Devices that are actuated either by a pressure of less than or equal to 2.5 pounds per square inch gauge or by a vacuum are not pressure relief devices.

Relief device or valve means a valve used only to release an unplanned, nonroutine discharge. A relief valve discharge can result from an operator error, a malfunction such as a power failure or equipment failure, or other unexpected cause that requires immediate venting of gas from process equipment in order to avoid safety hazards or equipment damage.

Repaired for the purpose of this regulation means equipment is adjusted, or otherwise altered, to eliminate a leak identified by sensory monitoring.

Sampling connection system means an assembly of equipment within a process unit or affected facility used during periods of representative operation to take samples of the process fluid. Equipment used to take nonroutine grab samples is not considered a sampling connection system.

Sensory monitoring means the detection of a potential leak to the atmosphere by walk-through visual, audible, or olfactory monitoring. Comprehensive component-by-component inspection is not required.

Shift means the time a shift operator normally works, typically 8 or 12 hours.

(3) *Requirements.* Table 4 of this section specifies the hydrogen fluoride production source category applicability and control requirements for both existing and new sources. The owner or operator must control hydrogen fluoride emissions from each affected source emission point as specified in table 4. General compliance, recordkeeping, and reporting requirements are specified in §§ 63.1108 through 63.1112. Specific monitoring, recordkeeping, and reporting requirements are specified in table 4. Minimization of emissions from startups, shutdowns, and malfunctions, including those resulting from kiln seals must be addressed in the startup, shutdown, and malfunction plan required by § 63.1111; the plan must also establish reporting and recordkeeping of such events. Procedures for approval of alternative means of emission limitations are specified in § 63.1113.

TABLE 4. TO § 63.1103(C)—WHAT ARE MY REQUIREMENTS IF I OWN OR OPERATE A HYDROGEN FLUORIDE PRODUCTION EXISTING OR NEW AFFECTED SOURCE?

If you own or operate . . .	And if . . .	Then you must . . .
1. A storage vessel	The stored material is hydrogen fluoride	Reduce emissions of hydrogen fluoride by venting displacement emissions created by normal filling or emptying activities through a closed-vent system to a recovery system or wet scrubber that is designed and operated to achieve a 99 weight-percent removal efficiency. The minimum liquid flow rate to the scrubber that achieves a 99 weight-percent removal efficiency shall be established, and may be done so by design analysis. The liquid flow rate to the scrubber shall be continuously monitored and records maintained according to § 63.996 and § 63.998(b), (c), and (d)(3) of 40 CFR subpart SS of this part. The Periodic Report specified in § 63.1110(a)(5) of this subpart shall include the information specified in § 63.999(c) of 40 CFR subpart SS of this part, as applicable.
2. A process vent from continuous unit operations.	The vent stream is from hydrogen fluoride recovery and refining vessels.	Reduce emissions of hydrogen fluoride from the process vent by venting emissions through a closed-vent system to a wet scrubber that is designed and operated to achieve a 99 weight-percent removal efficiency. Monitoring, recordkeeping, and reporting of wet scrubber operation shall be in accordance with the requirements stated above for a wet scrubber controlling hydrogen fluoride emissions from a storage vessel.

TABLE 3. TO § 63.1103(b)(3)(ii).—WHAT ARE MY REQUIREMENTS IF I OWN OR OPERATE AN ACRYLIC AND MODACRYLIC FIBER PRODUCTION EXISTING OR NEW AFFECTED SOURCE AND AM COMPLYING WITH PARAGRAPH (b)(3)(ii) OF THIS SECTION?—Continued

If you own or operate...	Then you must control total organic HAP emissions from the affected source by...
	b. Determine the facility acrylonitrile emission rate in accordance with the requirements specified in paragraph (b)(5) of this section.
3. Equipment as defined under § 63.1101 and it contains or contacts ≥ 10 weight-percent acrylonitrile,[a] and operates ≥ 300 hours per year.	Meeting either of the following standards for equipment leaks: a. Comply with subpart TT of this part; or b. Comply with subpart UU of this part.

[a] The weight-percent organic HAP is determined for equipment according to procedures specified in § 63.1107.

(4) *Fiber spinning line enclosure requirements.* For an owner or operator of a new or modified source electing to comply with paragraph (b)(3)(i) of this section, the fiber spinning line enclosure must be designed and operated to meet the requirements specified in paragraphs (b)(4)(i) through (iv) of this section.

(i) The enclosure must cover the spinning and washing areas of the spinning line.

(ii) The enclosure must be designed and operated in accordance with the criteria for a permanent total enclosure as specified in "Procedure T—Criteria for and Verification of a Permanent or Temporary Total Enclosure" in 40 CFR 52.741, Appendix B.

(iii) The enclosure may have permanent or temporary openings to allow worker access; passage of material into or out of the enclosure by conveyor, vehicles, or other mechanical means; entry of permanent mechanical or electrical equipment; or to direct airflow into the enclosure.

(iv) The owner or operator must perform the verification procedure for the enclosure as specified in section 5.0 to "Procedure T—Criteria for and Verification of a Permanent or Temporary Total Enclosure" initially when the enclosure is first installed and, thereafter, annually.

(5) *Facility acrylonitrile emission rate determination.* For an owner or operator electing to comply with paragraph (b)(3)(ii) of this section, the facility acrylonitrile emission rate must be determined using the requirements specified in paragraphs (b)(5)(i) through (iii) of this section.

(i) The owner or operator must prepare an initial determination of the facility acrylonitrile emission rate.

(ii) Whenever changes to the acrylic or modacrylic fiber production operations at the facility could potentially cause the facility acrylonitrile emission rate to exceed the applicable limit of kilogram of acrylonitrile per Megagram of fiber produced, the owner or operator must prepare a new determination of the facility acrylonitrile emission rate.

(iii) For each determination, the owner or operator must prepare and maintain at the facility site sufficient process data, emissions data, and any other documentation necessary to support the facility acrylonitrile emission rate calculation.

(c) *Hydrogen fluoride production applicability, definitions, and requirements.* (1) *Applicability.* (i) *Affected source.* For the hydrogen fluoride production (as defined in paragraph (c)(2) of this section) source category, the affected source shall comprise all emission points, in combination, listed in paragraphs (c)(1)(i)(A) through (D) of this section, that are associated with a hydrogen fluoride production process unit located at a major source as defined in section 112(a) of the Act.

(A) All storage vessels used to accumulate or store hydrogen fluoride.

(B) All process vents from continuous unit operations associated with hydrogen fluoride recovery and refining operations. These process vents include vents on condensers, distillation units, and water scrubbers.

(C) All transfer racks used to load hydrogen fluoride into tank trucks or railcars.

(D) Equipment in hydrogen fluoride service (as defined in paragraph (c)(2) of this section).

(ii) *Compliance schedule.* The compliance schedule, for affected sources as defined in paragraph (c)(1)(i) of this section, is specified in § 63.1102(a).

(2) *Definitions.*

Connector means flanged, screwed, or other joined fittings used to connect two pipelines or a pipeline and a piece of equipment. A common connector is a flange. Joined fittings welded completely around the circumference of the interface are not considered connectors for the purposes of this subpart.

Equipment means each pump, compressor, agitator, pressure relief device, sampling connection system, open-ended valve or line, valve, connector, and instrumentation system in hydrogen fluoride service; and any control devices or closed-vent systems used to comply with this subpart.

Hydrogen fluoride production means a process engaged in the production and recovery of hydrogen fluoride by reacting calcium fluoride with sulfuric acid. For the purpose of implementing this subpart, hydrogen fluoride production is not a process that produces gaseous hydrogen fluoride for direct reaction with hydrated aluminum to form aluminum fluoride (i.e., the hydrogen fluoride is not recovered as an intermediate or final product prior to reacting with the hydrated aluminum).

In hydrogen fluoride service means that a piece of equipment either contains or contacts a hydrogen fluoride process fluid (liquid or gas).

In vacuum service means that equipment is operating at an internal pressure which is at least 5 kilopascals below ambient pressure.

Instrumentation system means a group of equipment components used to condition and convey a sample of the process fluid to analyzers and instruments for the purpose of determining process operating conditions (e.g., composition, pressure, flow, etc.). Valves and connectors are the predominant type of equipment used in instrumentation systems; however, other types of equipment may also be included in these systems.

Kiln seal means the mechanical or hydraulic seals at both ends of the kiln, designed to prevent the infiltration of moisture and air through the interface of the rotating kiln and stationary pipes and equipment attached to the kiln during normal vacuum operation of the kiln (operation at an internal pressure of at least 0.25 kilopascal [one inch of water] below ambient pressure).

Leakless pump means a pump whose seals are submerged in liquid, a magnetically-driven pump, a pump equipped with a dual mechanical seal system that includes a barrier fluid system, a canned pump, or other pump that is designed with no externally

TABLE 2.—TO § 63.1103(b)(3)(i)—WHAT ARE MY REQUIREMENTS IF I OWN OR OPERATE AN ACRYLIC AND MODACRYLIC FIBER PRODUCTION EXISTING OR NEW AFFECTED SOURCE AND AM COMPLYING WITH PARAGRAPH (b)(3)(i) OF THIS SECTION?—Continued

If you own or operate...	And if...	Then you must...
4. A fiber spinning line that is a new or modified source.	The lines use a spin dope produced from either a suspension polymerization process or solution polymerization process,.	a. Reduce acrylonitrile emissions by 85 weight-percent or more. (For example, by enclosing the spinning and washing areas of the spinning line (as specified in paragraph (b)(4) of this section) and venting through a closed vent system and using any combination of control devices meeting the requirements of subpart SS, as specified in § 63.982(a), of this part); or b. Reduce acrylonitrile emissions from the spinning line to less than or equal to 0.25 kilograms of acrylonitrile per megagram (0.5 pounds of acrylonitrile per ton) of acrylic and modacrylic fiber produced; or c. Reduce the AN concentration of the spin dope to less than 100 ppmw.
5. A fiber spinning line that is an existing source.	The spinning line uses a spin dope produced from a solution polymerization process.	Maintain records and report emissions as specified in §§ 63.1109 through 63.1110. Control of spinning line AN emissions is not required
6. A fiber spinning line that is an existing source.	The spinning line uses a spin dope produced from a suspension polymerization process.	a. Reduce the AN concentration of the spin dope to less than 100 ppmw[b], or b. Reduce acrylonitrile emissions from the spinning line to less than or equal to 0.025 kilograms of acrylonitrile per megagram of acrylic and modacrylic fiber produced.
7. Equipment as defined under § 63.1101	It contains or contacts ≥10 weight-percent acrylonitrile[c], and operates ≥300 hours per year.	Comply with the requirements of subpart TT (national emission standards for equipment leaks (control level 1)) or subpart UU (national emission standards for equipment leaks (control level 2)) of this part.

[a] The mass emission rate of halogen atoms contained in organic compounds is determined according to the procedures specified in § 63.1104(i).
[b] The percent by weight organic HAP is determined according to the procedures specified in § 63.1107.
[c] The weight-percent organic HAP is determined for equipment according to procedures specified in § 63.1107.

(ii) The owner or operator must control organic HAP emissions from the acrylic and modacrylic fibers production facility by meeting the applicable requirements specified in table 3 of this section. The owner or operator must determine the facility acrylonitrile emission rate using the procedures specified in paragraph (b)(5) of this section. Applicability assessment procedures and methods are specified in §§ 63.1104 through 63.1107. An owner or operator of an affected source does not have to perform tests, TRE calculations or other applicability assessment procedures if they opt to comply with the most stringent requirements for an applicable emission point pursuant to this subpart. General compliance, recordkeeping, and reporting requirements are specified in §§ 63.1108 through 63.1112. Procedures for approval of alternative means of emission limitations are specified in § 63.1113.

TABLE 3. TO § 63.1103(b)(3)(ii).—WHAT ARE MY REQUIREMENTS IF I OWN OR OPERATE AN ACRYLIC AND MODACRYLIC FIBER PRODUCTION EXISTING OR NEW AFFECTED SOURCE AND AM COMPLYING WITH PARAGRAPH (b)(3)(ii) OF THIS SECTION?

If you own or operate...	Then you must control total organic HAP emissions from the affected source by...
1. An acrylic and modacrylic fibers production affected source and your facility is an existing source.	Meeting all of following requirements: a. Reduce total acrylonitrile emissions from all affected storage vessels, process vents, wastewater streams associated with the acrylic and modacrylic fibers production process unit as defined in paragraph (b)(2) of this section, and fiber spinning lines operated in your acrylic and modacrylic fibers production facility to less than or equal to 1.0 kilograms (kg) of acrylonitrile per megagram (Mg) of fiber produced. b. Determine the facility acrylonitrile emission rate in accordance with the requirements specified in paragraph(b)(5) of this section.
2. An acrylic and modacrylic fibers production affected source and your facility is a new source.	Meeting all of following requirements: a. Reduce total acrylonitrile emissions from all affected storage vessels, process vents, wastewater streams associated with the acrylic and modacrylic fibers production process unit as defined in paragaph (b)(2) of this section, and fiber spinning lines operated in the acrylic and modacrylic fibers production facility to less than or equal to 0.5 kilograms (kg) of acrylonitrile per megagram (Mg) of fiber produced.

source category control requirement applicability for both existing and new sources. Applicability assessment procedures and methods are specified in §§ 63.1104 through 63.1107. An owner or operator of an affected source is not required to perform tests, or other applicability assessment procedures if they opt to comply with the most stringent requirements for an applicable emission point pursuant to this subpart. General compliance, recordkeeping, and reporting requirements are specified in §§ 63.1108 through 63.1112. Procedures for approval of alternative means of emission limitations are specified in § 63.1113. The owner or operator must control organic HAP emissions from each affected source emission point by meeting the applicable requirements specified in table 2 of this section.

TABLE 2.—TO § 63.1103(b)(3)(i)—WHAT ARE MY REQUIREMENTS IF I OWN OR OPERATE AN ACRYLIC AND MODACRYLIC FIBER PRODUCTION EXISTING OR NEW AFFECTED SOURCE AND AM COMPLYING WITH PARAGRAPH (b)(3)(i) OF THIS SECTION?

If you own or operate...	And if...	Then you must...
1. A storage vessel	The stored material is acrylonitrile	a. Reduce emissions of acrylonitrile by 98 weight-percent by venting emissions through a closed vent system to any combination of control device meeting the requirements of subpart SS (national emission standards for closed vent systems, control devices, recovery devices, and routing to a fuel gas system or a process), as specified in § 63.982(a)(1) (storage vessel requirements) of this part, or 95 weight-percent or greater by venting through a closed vent system to a recovery device meeting the requirements of subpart SS (national emission standards for closed vent systems, control devices, recovery devices, and routing to a fuel gas system or a process), § 63.993 (recovery device requirements) of this part; or b. Comply with the requirements of subpart WW (national emission standards for storage vessels (control level 2)) of this part.
2. A process vent from continuous unit operations (halogenated).	The vent steam has a mass emission rate of halogen atoms contained in organic compounds ≥0.45 kilograms per hour[a] and an acrylonitrile concentration ≥50 parts per million by volume[b] and an average flow rate ≥0.005 cubic meters per minute.	a. Reduce emissions of acrylonitrile or TOC as specified for nonhalogenated process vents from continuous unit operations (other than by using a flare) by venting emissions through a closed vent system to a halogen reduction device meeting the requirements of subpart SS, § 63.994 (halogen reduction devices requirements) of this part that reduces hydrogen halides and halogens by 99 weight-percent or to less than 0.45 kilograms per year, whichever is less stringent; or b. Reduce the process vent halogen atom mass emission rate to less than 0.45 kilograms per hour by venting emissions through a closed vent system to a halogen reduction device meeting the requirements of subpart SS, § 63.994 (halogen reduction devices requirements) of this part and then complying with the requirements specified for process vents from continuous unit operations (nonhalogenated).
3. A process vent from continuous unit operations (nonhalogenated).	The vent steam has a mass emission rate of halogen atoms contained in organic compounds <0.45 kilograms per hour[a], and an acrylonitrile concentration ≥50 parts per million by volume[b] and an average flow rate ≥0.005 cubic meters per minute.	a. Reduce emissions of acrylonitrile by using a flare meeting the requirements of subpart SS, § 63.987 (flare requirements) of this part or b. Reduce emissions of acrylonitrile by 98 weight-percent, or reduce TOC to a concentration of 20 parts per million by volume, whichever is less stringent, by venting emissions through a closed vent system to any combination of control devices meeting the requirements of subpart SS (national emission standards for closed vent systems, control devices, recovery devices, and routing to a fuel gas system or a process), as specified in § 63.982(a)(2) (process vent requirements) of this part.

TABLE 1. TO § 63.1103(a)—WHAT ARE MY REQUIREMENTS IF I OWN OR OPERATE AN ACETAL RESINS PRODUCTION EXISTING OR NEW AFFECTED SOURCE?—Continued

If you own or operate. . .	And if. . .	Then you must. . .
3. A back end process vent from continuous unit operations.	The vent stream has a a TRE[a] < 1.0	a. Reduce emissions of total organic HAP by using a flare meeting the requirements of subpart SS of this part; or b. Reduce emissions of total organic HAP by 98 weight-percent, or reduce TOC to a concentration of 20 parts per million by volume, whichever is less stringent, by venting emissions through a closed vent system to any combination of control devices meeting the requirements of subpart SS, as specified in § 63.982(a)(2) (process vent requirements) of this part; or c. Achieve and maintain a TRE index value greater than 1.0.
4. A back end process vent from continuous unit operations.	1.0 ≤ TRE[a] ≤ 4.0	Monitor and keep records of equipment operating parameters specified to be monitored under subpart SS, §§ 63.990(c)(absorber, condenser, and carbon adsorber monitoring) or 63.995(c) (other noncombustion systems used as a control device monitoring) of this part.
5. Equipment as defined under § 63.1101	The equipment contains or contacts ≥ 10 weight-percent organic HAP[b], and operates ≤ 300 hours per year.	Comply with the requirements of subpart TT (national emission standards for equipment leaks (control level 1)) or subpart UU (national emission standards for equipment leaks (control level 2)) of this part.

a The TRE is determined according to the procedures specified in § 63.1104(j).
b The weight-percent organic HAP is determined for equipment according to procedures specified in § 63.1107.

(b) *Acrylic and modacrylic fiber production applicability, definitions, and requirements.* (1) *Applicability.* (i) *Affected source.* For the acrylic fibers and modacrylic fibers production (as defined in paragraph (b)(2) of this section) source category, the affected source shall comprise all emission points, in combination, listed in paragraphs (b)(1)(i)(A) through (E) of this section, that are associated with a suspension or solution polymerization process unit that produces acrylic and modacrylic fiber located at a major source as defined in section 112(a) of the Act.

(A) All storage vessels that store liquid containing acrylonitrile or organic HAP.

(B) All process vents from continuous unit operations.

(C) All wastewater streams associated with the acrylic and modacrylic fibers production process unit as defined in (b)(2) of this section.

(D) Equipment (as defined in § 63.1101 of this subpart) that contains or contacts acrylonitrile or organic HAP.

(E) All acrylic and modacrylic fiber spinning lines using a spinning solution or suspension having organic acrylonitrile or organic HAP. For the purposes of implementing this paragraph, a spinning line includes the spinning solution filters, spin bath, and the equipment used downstream of the spin bath to wash, dry, or draw the spun fiber.

(ii) *Compliance schedule.* The compliance schedule, for affected sources as defined in paragraph (b)(1)(i) of this section, is specified in § 63.1102(a).

(2) *Definitions.*

Acrylic fiber means a manufactured synthetic fiber in which the fiber-forming substance is any long-chain synthetic polymer composed of at least 85 percent by weight of acrylonitrile units.

Acrylic and modacrylic fibers production means the production of either of the following synthetic fibers composed of acrylonitrile units:

(i) Acrylic fiber.

(ii) Modacrylic fiber.

Acrylonitrile solution polymerization means a process where acrylonitrile and comonomers are dissolved in a solvent to form a polymer solution (typically polyacrylonitrile). The polyacrylonitrile is soluble in the solvent. In contrast to suspension polymerization, the resulting reactor polymer solution (spin dope) is filtered and pumped directly to the fiber spinning process.

Acrylonitrile suspension polymerization means a polymerization process where small drops of acrylonitrile and comonomers are suspended in water in the presence of a catalyst where they polymerize under agitation. Solid beads of polymer are formed in this suspension reaction which are subsequently filtered, washed, refiltered, and dried. The beads must be subsequently redissolved in a solvent to create a spin dope prior to introduction to the fiber spinning process.

Fiber spinning line means the group of equipment and process vents associated with acrylic or modacrylic fiber spinning operations. The fiber spinning line includes (as applicable to the type of spinning process used) the blending and dissolving tanks, spinning solution filters, wet spinning units, spin bath tanks, and the equipment used downstream of the spin bath to wash, dry, or draw the spun fiber.

Modacrylic fiber means a manufactured synthetic fiber in which the fiber-forming substance is any long-chain synthetic polymer composed of at least 35 percent by weight of acrylonitrile units but less than 85 percent by weight of acrylonitrile units.

Spin dope means the liquid mixture of polymer and solvent that is fed to the spinneret to form the acrylic and modacrylic fibers.

(3) *Requirements.* An owner or operator of an affected source must comply with the requirements of paragraph (b)(3)(i) or (ii) of this section.

(i) Table 2 of this section specifies the acrylic and modacrylic fiber production

under this subpart shall comply with this subpart no later than July 1, 2002 if:

(A) The promulgated standard is more stringent than the proposed standard: and

(B) The owner or operator complies with this subpart as proposed during the 3-year period immediately after the effective date of standards for an acetal resins, acrylic and modacrylic fiber, hydrogen fluoride, or polycarbonate production affected source.

(2) *Compliance dates for existing sources.* (i) The owner or operator of an existing acetal resins, acrylic and modacrylic fiber, hydrogen fluoride, or polycarbonate production affected source shall comply with the requirements of this subpart within 3 years after the effective date of standards for the affected source.

(ii) The owner or operator of an acetal resins, acrylic and modacrylic fiber, hydrogen fluoride, or polycarbonate production nonmajor source that increases its emissions of (or its potential to emit) hazardous air pollutants such that the source becomes a major source shall be subject to the relevant standards for existing sources under this subpart. Such sources shall comply with the relevant standard within 3 years of becoming a major source.

§ 63.1103 Source category-specific applicability, definitions, and requirements.

(a) *Acetal resins production applicability, definitions, and requirements.* (1) *Applicability.* (i) *Affected source.* For the acetal resins production source category (as defined in paragraph (a)(2) of this section), the affected source shall comprise all emission points, in combination, listed in paragraphs (a)(1)(i)(A) through (D) of this section, that are associated with an acetal resins production process unit located at a major source, as defined in section 112(a) of the Clean Air Act (Act).

(A) All storage vessels that store liquids containing organic HAP.

(B) All process vents from continuous unit operations (front end process vents and back end process vents).

(C) All wastewater streams associated with the acetal resins production process unit as defined in (a)(2) of this section.

(D) Equipment (as defined in § 63.1101 of this subpart) that contains or contacts organic HAP.

(ii) *Compliance schedule.* The compliance schedule for affected sources as defined in paragraph (a)(1)(i) of this section is specified in § 63.1102(a).

(2) *Definitions.*

Acetal resins production means the production of homopolymers and/or copolymers of alternating oxymethylene units. Acetal resins are also known as polyoxymethylenes, polyacetals, and aldehyde resins. Acetal resins are generally produced by polymerizing formaldehyde (HCHO) with the methylene functional group (CH_2) and are characterized by repeating oxymethylene units (CH_2O) in the polymer backbone.

Back end process vent means any process vent from a continuous unit operation that is not a front end process vent up to the final separation of raw materials and by-products from the stabilized polymer.

Front end process vent means any process vent from a continuous unit operation involved in the purification of formaldehyde feedstock for use in the acetal homopolymer process. All front end process vents are restricted to those vents that occur prior to the polymer reactor.

(3) *Requirements.* Table 1 of this section specifies the acetal resins production standards applicability for existing and new sources. Applicability assessment procedures and methods are specified in §§ 63.1104 through 63.1107. An owner or operator of an affected source is not required to perform tests, TRE calculations or other applicability assessment procedures if they opt to comply with the most stringent requirements for an applicable emission point pursuant to this subpart. General compliance, recordkeeping, and reporting requirements are specified in §§ 63.1108 through 63.1112. Procedures for approval of alternative means of emission limitations are specified in § 63.1113. The owner or operator must control organic HAP emissions from each affected source emission point by meeting the applicable requirements specified in table 1 of this section.

TABLE 1. TO § 63.1103(a)—WHAT ARE MY REQUIREMENTS IF I OWN OR OPERATE AN ACETAL RESINS PRODUCTION EXISTING OR NEW AFFECTED SOURCE?

If you own or operate. . .	And if. . .	Then you must. . .
1. A storage vessel with: 34 cubic meters < capacity.	The maximum true vapor pressure of organic HAP > 17.1 kilopascals (for existing sources) or > 11.7 kilopascals (for new sources).	a. Reduce emissions of total organic HAP by 95 weight-percent by venting emissions through a closed vent system to any combination of control devices meeting the requirements of subpart SS (national emission standards for closed vent systems, control devices, recovery devices, and routing to a fuel gas system or a process), as specified in § 63.982(a)(1) (storage vessel requirements) of this part; or b. Comply with the requirements of subpart WW (national emission standards for storage vessels (control level 2)) of this part.
2. A front end process vent from continuous unit operations.	.....	a. Reduce emissions of total organic HAP by using a flare meeting the requirements of subpart SS of this part; or b. Reduce emissions of total organic HAP by 60 weight-percent, or reduce TOC to a concentration of 20 parts per million by volume, whichever is less stringent, by venting emissions through a closed vent system to any combination of control devices meeting the requirements of subpart SS, as specified in § 63.982(a)(2) (process vent requirements) of this part.

the applicability criteria of this subpart. Process vents process gas streams that are either discharged directly to the atmosphere or are discharged to the atmosphere after diversion through a product recovery device. Process vents include vents from distillate receivers, product separators, and ejector-condensers. Process vents exclude relief valve discharges and leaks from equipment regulated under this subpart. Process vents that process gas streams containing less than or equal to 0.005 weight-percent organic HAP are not subject to the process vent requirements of this subpart.

Product means a compound or chemical which is manufactured as the intended product of the applicable production process unit as defined in § 63.1103. By-products, isolated intermediates, impurities, wastes, and trace contaminants are not considered products.

Recapture device means an individual unit of equipment capable of and used for the purpose of recovering chemicals, but not normally for use, reuse, or sale. For example, a recapture device may recover chemicals primarily for disposal. Recapture devices include, but are not limited to, absorbers, carbon adsorbers, and condensers. For purposes of the monitoring, recordkeeping, and reporting requirements of this subpart, recapture devices are considered recovery devices.

Recovery device means an individual unit of equipment capable of and normally used for the purpose of recovering chemicals for fuel value (i.e., net positive heating value), use, reuse, or for sale for fuel value. Examples of equipment that may be recovery devices include absorbers, carbon adsorbers, condensers, oil-water separators or organic-water separators, or organic removal devices such as decanters, strippers, or thin-film evaporation units. For purposes of the monitoring, recordkeeping, and reporting requirements of this subpart, recapture devices are considered recovery devices.

Research and development facility means laboratory and pilot plant operations whose primary purpose is to conduct research and development into new processes and products, where the operations are under the close supervision of technically trained personnel, and is not engaged in the manufacture of products for commercial sale, except in a de minimis manner.

Shutdown means the cessation of operation of a regulated source and equipment required or used to comply with this subpart, or the emptying and degassing of a storage vessel. Shutdown is defined here for purposes of including, but not limited to, periodic maintenance, replacement of equipment, or repair. Shutdown does not include the routine rinsing or washing of equipment in batch operation between batches.

Startup means the setting into operation of a regulated source and/or equipment required or used to comply with this subpart. Startup includes initial startup, operation solely for testing equipment, the recharging of equipment in batch operation, and transitional conditions due to changes in product for flexible operation units.

Storage vessel or *Tank*, for the purposes of this subpart, means a stationary unit that is constructed primarily of nonearthen materials (such as wood, concrete, steel, fiberglass, or plastic) that provide structural support and is designed to hold an accumulation of liquids or other materials. Storage vessel does not include:

(1) Vessels permanently attached to motor vehicles such as trucks, railcars, barges, or ships;

(2) Bottoms receiver tanks;

(3) Surge control vessels; or

(4) Vessels storing wastewater.

Subsequent startup means any setting into operation of a regulated source and/or equipment required or used to comply with this subpart following the initial startup.

Surge control vessel means a feed drum, recycle drum, or intermediate vessel. Surge control vessels are used within a process unit (as defined in this subpart) when in-process storage, mixing, or management of flow rates or volumes is needed to assist in production of a product.

Total organic compounds or *TOC* means those compounds, excluding methane and ethane, measured according to the procedures of Method 18 or Method 25A of appendix A of part 60.

Total resource effectiveness index value or *TRE index value* means a measure of the supplemental total resource requirement per unit reduction of organic HAP associated with a process vent stream, based on vent stream flow rate, emission rate of organic HAP, net heating value, and corrosion properties (whether or not the vent stream contains halogenated compounds), as quantified by the equations given under § 63.1104(e).

Transfer rack means a single system used to fill bulk cargo tanks mounted on or in a truck or railcar. A transfer rack includes all loading arms, pumps, meters, shutoff valves, relief valves, and other piping and equipment necessary for the transfer operation. Transfer equipment and operations that are physically separate (i.e., do not share common piping, valves, and other equipment) are considered to be separate transfer racks.

Unit operation means distinct equipment used in processing, among other things, to prepare reactants, facilitate reactions, separate and purify products, and recycle materials. Equipment used for these purposes includes, but is not limited to, reactors, distillation columns, extraction columns, absorbers, decanters, dryers, condensers, and filtration equipment.

Vapor balancing system means a piping system that is designed to collect organic HAP vapors displaced from tank trucks or railcars during loading; and to route the collected organic HAP vapors to the storage vessel from which the liquid being loaded originated, or to compress collected organic HAP vapors and commingle with the raw feed of a production process unit.

§ 63.1102 Compliance schedule.

(a) *General requirements.* Affected sources, as defined in § 63.1103(a)(1)(i) for acetyl resins production; § 63.1103(b)(1)(i) for acrylic and modacrylic fiber production; § 63.1103(c)(1)(i) for hydrogen fluoride production; or § 63.1103(d)(1)(i) for polycarbonate production, shall comply with the appropriate provisions of this subpart and the subparts referenced by this subpart according to the schedule described in paragraph (a)(1) or (2) of this section, as appropriate.

(1) *Compliance dates for new and reconstructed sources.* (i) The owner or operator of a new or reconstructed affected source for which construction or reconstruction commences after October 14, 1998 that has an initial startup before the effective date of standards for an acetal resins, acrylic and modacrylic fiber, hydrogen fluoride, or polycarbonate production affected source under this subpart shall comply with this subpart no later than the effective date of standards for the affected source.

(ii) The owner or operator of a new or reconstructed acetal resins, acrylic and modacrylic fiber, hydrogen fluoride, or polycarbonate production affected source that has an initial startup after the effective date of standards for the affected source shall comply with this subpart upon startup of the source.

(iii) The owner or operator of an acetal resins, acrylic and modacrylic fiber, hydrogen fluoride, or polycarbonate production affected source for which construction or reconstruction is commenced after October 14, 1998 but before the effective date of standards for the affected source

bottoms in organic hazardous air pollutant service as defined in § 63.1103 for the applicable chemical manufacturing production unit; and any control device or system used to comply with this subpart.

Equivalent method means any method of sampling and analysis for an air pollutant that has been demonstrated to the Administrator's satisfaction to have a consistent and quantitatively known relationship to the reference method, under specified conditions.

Excess emissions means emissions in excess of those that would have occurred if there were no start-up, shutdown, or malfunction and the owner or operator complied with the relevant provisions of this subpart.

Final recovery device means the last recovery device on a process vent stream from a continuous unit operation at an affected source in a source category where the applicability criteria includes a TRE index value. The final recovery device usually discharges to a combustion device, recapture device, or directly to the atmosphere.

Flexible operation unit means a process unit that manufactures different chemical products periodically by alternating raw materials or operating conditions.

Fuel gas means gases that are combusted to derive useful work or heat.

Fuel gas system means the offsite and onsite piping and flow and pressure control system that gathers gaseous stream(s) generated by onsite operations, may blend them with other sources of gas, and transports the gaseous stream for use as a fuel gas in combustion devices or in-process combustion equipment, such as furnaces and gas turbines, either singly or in combination.

Halogens and hydrogen halides means hydrogen chloride (HCl), chlorine (Cl2), hydrogen bromide (HBr), bromine (Br2), and hydrogen fluoride (HF).

Impurity means a substance that is produced coincidentally with the primary product, or is present in a raw material. An impurity does not serve a useful purpose in the production or use of the primary product and is not isolated.

Initial startup means, for new sources, the first time the source begins production. For additions or changes not defined as a new source by this subpart, initial startup means the first time additional or changed equipment is put into operation. Initial startup does not include operation solely for testing equipment. Initial startup does not include subsequent startup (as defined in this section) of process units following malfunctions or process unit shutdowns. Except for equipment leaks, initial startup also does not include subsequent startups (as defined in this section) of process units following changes in product for flexible operation units or following recharging of equipment in batch unit operations.

Low throughput transfer rack means a transfer rack that transfers less than a total of 11.8 million liters per year of liquid containing regulated HAP.

Malfunction means any sudden, infrequent, and not reasonably preventable failure of air pollution control equipment, process equipment, or a process to operate in a normal or usual manner. Failures that are caused in part by poor maintenance or careless operation are not malfunctions.

Maximum true vapor pressure means the equilibrium partial pressure exerted by the total organic HAP in the stored or transferred liquid at the temperature equal to the highest calendar-month average of the liquid storage or transfer temperature for liquids stored or transferred above or below the ambient temperature or at the local maximum monthly average temperature as reported by the National Weather Service for liquids stored or transferred at the ambient temperature, as determined:

(1) In accordance with methods described in American Petroleum Institute Publication 2517, Evaporation Loss From External Floating-Roof Tanks (incorporated by reference as specified in § 63.14 of subpart A of this part); or

(2) As obtained from standard reference texts; or

(3) As determined by the American Society for Testing and Materials Method D2879–83 (incorporated by reference as specified in § 63.14 of subpart A of this part); or

(4) Any other method approved by the Administrator.

On-site means, with respect to records required to be maintained by this subpart, a location within a plant site that encompasses the affected source. On-site includes, but is not limited to, the affected source to which the records pertain, or central files elsewhere at the plant site.

Organic hazardous air pollutant or *organic HAP* means any organic chemicals that are also HAP.

Permitting authority means one of the following:

(1) The State air pollution control agency, local agency, other State agency, or other agency authorized by the Administrator to carry out a permit program under part 70 of this chapter; or

(2) The Administrator, in the case of EPA-implemented permit programs under title V of the Act (42 U.S.C. 7661) and part 71 of this chapter.

Plant site means all contiguous or adjoining property that is under common control, including properties that are separated only by a road or other public right-of-way. Common control includes properties that are owned, leased, or operated by the same entity, parent entity, subsidiary, or any combination thereof.

Process condenser means a condenser whose primary purpose is to recover material as an integral part of a process. The condenser must support a vapor-to-liquid phase change for periods of source equipment operation that are above the boiling or bubble point of substance(s). Examples of process condensers include distillation condensers, reflux condensers, process condensers in line prior to the vacuum source, and process condensers used in stripping or flashing operations.

Process unit means the equipment assembled and connected by pipes or ducts to process raw and/or intermediate materials and to manufacture an intended product. A process unit includes more than one unit operation. A process unit includes, but is not limited to, process vents, storage vessels, and equipment.

Process unit shutdown means a work practice or operational procedure that stops production from a process unit, or part of a process unit during which practice or procedure it is technically feasible to clear process material from the process unit, or part of the process unit, consistent with safety constraints and during which repairs can be effected. The following are not considered process unit shutdowns:

(1) An unscheduled work practice or operational procedure that stops production from a process unit, or part of a process unit, for less than 24 hours.

(2) An unscheduled work practice or operational procedure that would stop production from a process unit, or part of a process unit, for a shorter period of time than would be required to clear the process unit, or part of the process unit, of materials and start up the unit and result in greater emissions than delay of repair of leaking components until the next scheduled process unit shutdown.

(3) The use of spare equipment and technically feasible bypassing of equipment without stopping production.

Process vent means a piece of equipment that processes a gas stream (both batch and continuous streams) during operation of the unit within a manufacturing process unit that meets

compliance dates specified in § 63.1102 for an affected source subject to this subpart, a process vent that is part of an existing source that is subject to the process vent requirements of this subpart and to the process vent requirements of subpart G (the HON) of this part is in compliance with this subpart if it complies with either such requirement and has notified the Administrator in the Notification of Compliance Status report required by § 63.1110(a)(4).

(3) *Overlap of subpart YY with other regulations for transfer racks.* After the compliance dates specified in § 63.1102 for an affected source subject to this subpart, a transfer rack that is part of an existing source that is subject to the transfer rack requirements of this subpart and to the transfer rack requirements of subpart G (the HON) of this part is in compliance with this subpart if it complies with either such requirement and has notified the Administrator in the Notification of Compliance Status report required by § 63.1110(a)(4).

(4) *Overlap of subpart YY with other regulations for equipment leaks.* (i) After the compliance dates specified in § 63.1102 for an affected source subject to this subpart, equipment that is part of an existing source that is subject to the equipment leak control requirements of subpart TT (National Emission Standards for Equipment Leaks—Control Level 1) pursuant to this subpart and to the equipment leak control requirements of subpart VV of part 60 or subpart V of part 61 is required only to comply with the equipment leak requirements of this subpart.

(ii) After the compliance dates specified in § 63.1102 for an affected source subject to this subpart, equipment that is part of an existing source that is subject to the equipment leak control requirements of subpart UU (National Emission Standards for Equipment Leaks—Control Level 2) of this part pursuant to this subpart and to the equipment leak control requirements of subpart H (the HON) or subpart I of this part is in compliance with the equipment leak control requirements of this subpart if it complies with either such requirement and has notified the Administrator in the Notification of Compliance Status report required by § 63.1110(a)(4).

§ 63.1101 Definitions.

All terms used in this subpart shall have the meaning given them in the Act, in 40 CFR 63.2 (General Provisions), and in this section.

Batch cycle refers to manufacturing a product from start to finish in a batch unit operation.

Batch emission episode means a discrete venting episode that may be associated with a single unit operation. A unit operation may have more than one batch emission episode per batch cycle. For example, a displacement of vapor resulting from the charging of a vessel with organic HAP will result in a discrete emission episode. If the vessel is then heated, there may also be another discrete emission episode resulting from the expulsion of expanded vapor. Both emission episodes may occur during the same batch cycle in the same vessel or unit operation. There are possibly other emission episodes that may occur from the vessel or other process equipment, depending on process operations.

Batch unit operation means a unit operation involving intermittent or discontinuous feed into equipment and, in general, involves the emptying of equipment after the batch cycle ceases and prior to beginning a new batch cycle. Mass, temperature, concentration and other properties of the process may vary with time. Addition of raw material and withdrawal of product do not simultaneously occur in a batch unit operation.

Bottoms receiver means a tank that collects distillation bottoms before the stream is sent for storage or for further downstream processing.

By compound means by individual stream components, not carbon equivalents.

Capacity means the volume of liquid that is capable of being stored in a storage vessel, determined by multiplying the vessel's internal cross-sectional area by the internal height of the shell.

Closed vent system means a system that is not open to the atmosphere and is composed of piping, ductwork, connections, and, if necessary, flow inducing devices that transport gas or vapor from an emission point to a control device. A closed vent system does not include the vapor collection system that is part of any tank truck or railcar or the loading arm or hose that is used for vapor return. For transfer racks, the closed vent system begins at, and includes, the first block valve on the downstream side of the loading arm or hose used to convey displaced vapors.

Combined vent stream means a combination of emission streams from continuous and/or batch unit operations.

Compliance equipment means monitoring equipment used by an owner or operator of an affected source under this subpart to demonstrate compliance with an operation or emission limit standard.

Continuous parameter monitoring system or *CPMS* means the total equipment that may be required to meet the data acquisition and availability requirements of this subpart, and that is used to sample, condition (if applicable), analyze, and provide a record of process or control system parameters.

Continuous unit operation means a unit operation where the inputs and outputs flow continuously. Continuous unit operations typically approach steady-state conditions. Continuous unit operations typically involve the simultaneous addition of raw material and withdrawal of the product.

Control device means, with the exceptions noted below, a combustion device, recovery device, recapture device, or any combination of these devices used to comply with this subpart or a referencing subpart. For process vents from continuous unit operations at affected sources in source categories where the applicability criteria includes a TRE index value, recovery devices are not considered to be control devices. Primary condensers on steam strippers or fuel gas systems are not considered to be control devices.

Day means a calendar day.

Distillate receiver means overhead receivers, overhead accumulators, reflux drums, and condenser(s) including ejector condenser(s) associated with a distillation unit.

Distillation unit means a device or vessel in which one or more feed streams are separated into two or more exit streams, each exit stream having component concentrations different from those in the feed stream(s). The separation is achieved by the redistribution of the components between the liquid and the vapor phases by vaporization and condensation as they approach equilibrium within the distillation unit. Distillation unit includes the distillate receiver, reboiler, and any associated vacuum pump or steam jet.

Emission point means an individual process vent, storage vessel, transfer rack, wastewater stream, kiln, fiber spinning line, equipment leak, or other point where a gaseous stream is released.

Equipment means each of the following that is subject to control under this subpart: pump, compressor, agitator, pressure relief device, sampling collection system, open-ended valve or line, valve, connector, instrumentation system, and surge control vessel and

have different primary products, then the owner or operator shall assign the storage vessel to any one of the process units sharing the storage vessel.

(6) If the predominant use of a storage vessel varies from year to year, then predominant use shall be determined based on the utilization that occurred during the year preceding the date of promulgation of standards for an affected source under this subpart or based on the expected utilization for the 5 years following the promulgation date of standards for an affected source under this subpart for existing affected sources, whichever is more representative of the expected operations for that storage vessel, and based on the expected utilization for the 5 years after initial startup for new affected sources. The determination of predominant use shall be reported in the Notification of Compliance Status Report required by § 63.1110(a)(4). If the predominant use changes, the redetermination of predominant use shall be reported in the next Periodic Report.

(7) If the storage vessel begins receiving material from (or sending material to) another process unit; ceases to receive material from (or send material to) a process unit; or if the applicability of this subpart to a storage vessel has been determined according to the provisions of paragraphs (e)(1) through (6) of this section and there is a significant change in the use of the storage vessel that could reasonably change the predominant use, the owner or operator shall reevaluate the applicability of this subpart to the storage vessel.

(8) Where a storage vessel is located at a major source that includes one or more process units that place material into, or receive materials from, the storage vessel, but the storage vessel is located in a tank farm, the applicability of this subpart shall be determined according to the provisions in paragraphs (e)(8)(i) through (iii) of this section.

(i) The storage vessel may only be assigned to a process unit that utilizes the storage vessel and does not have an intervening storage vessel for that product (or raw material, as appropriate). With respect to any process unit, an intervening storage vessel means a storage vessel connected by hard-piping to the process unit and to the storage vessel in the tank farm so that product or raw material entering or leaving the process unit flows into (or from) the intervening storage vessel and does not flow directly into (or from) the storage vessel in the tank farm.

(ii) If there is only one process unit at a major source that meets the criteria of paragraph (e)(8)(i) of this section with respect to a storage vessel, the storage vessel shall be assigned to that process unit.

(iii) If there are two or more process units at the major source that meet the criteria of paragraph (e)(8)(i) of this section with respect to a storage vessel, the storage vessel shall be assigned to one of those process units according to the provisions of paragraph (e)(6) of this section. The predominant use shall be determined among only those process units that meet the criteria of paragraph (e)(8)(i) of this section.

(f) *Recovery operation equipment ownership determination.* To determine the process unit to which recovery equipment shall belong, the owner or operator shall sequentially follow the procedures specified in paragraphs (f)(1) through (7) of this section, stopping as soon as the determination is made.

(1) If recovery operation equipment is already subject to another subpart of this part on the date standards are promulgated for an affected source, that recovery operation equipment shall belong to the process unit subject to the other subpart.

(2) If recovery operation equipment is used exclusively by a single process unit, the recovery operation shall belong to that process unit.

(3) If recovery operation equipment is shared among process units, then the recovery operation equipment shall belong to that process unit that has the greatest input into or output from the recovery operation equipment (i.e., that process unit has the predominant use of the recovery operation equipment).

(4) If predominant use cannot be determined for recovery operation equipment that is shared among process units and if one of those process units is a process unit subject to this subpart, the recovery operation equipment shall belong to the process unit subject to this subpart.

(5) If predominant use cannot be determined for recovery operation equipment that is shared among process units and if more than one of the process units are process units that have different primary products and that are subject to this subpart, then the owner or operator shall assign the recovery operation equipment to any one of those process units.

(6) If the predominant use of recovery operation equipment varies from year to year, then the predominant use shall be determined based on the utilization that occurred during the year preceding the promulgation date of standards for an affected source under this subpart or based on the expected utilization for the 5 years following the promulgation date for standards for an affected source under this subpart for existing affected sources, whichever is the more representative of the expected operations for the recovery operations equipment, and based on the expected utilization for the first 5 years after initial startup for new affected sources. This determination shall be reported in the Notification of Compliance Status Report required by § 63.1110(a)(4). If the predominant use changes, the redetermination of predominant use shall be reported in the next Periodic Report.

(7) If there is an unexpected change in the utilization of recovery operation equipment that could reasonably change the predominant use, the owner or operator shall redetermine to which process unit the recovery operation belongs by reperforming the procedures specified in paragraphs (f)(2) through (6) of this section.

(g) *Overlap with other regulations.* Paragraphs (g)(1) through (4) of this section specify the applicability of subpart YY emission point requirements when other rules may apply. Where subpart YY of this part allows an owner or operator an option to comply with one or another regulation to comply with subpart YY of this part, an owner or operator must report which regulation they choose to comply with in the Notification of Compliance Status report required by § 63.1110(a)(4).

(1) *Overlap of subpart YY with other regulations for storage vessels.* (i) After the compliance dates specified in § 63.1102 for an affected source subject to this subpart, a storage vessel that is part of an existing source that is subject to the storage vessel requirements of this subpart and the storage vessel requirements of subpart G (the hazardous organic national emission standards for hazardous air pollutants (the HON)) of this part is in compliance with the requirements of this subpart if it complies with either such requirement and has notified the Administrator in the Notification of Compliance Status report required by § 63.1110(a)(4).

(ii) After the compliance dates specified in § 63.1102 for an affected source subject to this subpart, a storage vessel that is part of an existing source that is subject to the storage vessel requirements of this subpart and to the storage vessel requirements of subpart Ka or Kb of part 60 is required only to comply with the storage vessel requirements of this subpart.

(2) *Overlap of subpart YY with other regulations for process vents.* After the

TABLE 1 TO § 63.1100(a).—SOURCE CATEGORY MACT [a] APPLICABILITY

Source category	Storage vessels	Process vents	Transfer racks	Equipment leaks	Waste-water streams	Other	Source category MACT requirements
Acetal Resins Production	Yes	Yes	No	Yes	Yes	No	§ 63.1103(a)
Acrylic and Modacrylic Fibers Production	Yes	Yes	No	Yes	Yes	Yes [b]	§ 63.1103(b)
Hydrogen Fluoride Production	Yes	Yes	Yes	Yes	No	No	§ 63.1103(c)
Polycarbonate Production	Yes	Yes	No	Yes	Yes	No	§ 63.1103(d)

[a] Maximum achievable control technology.
[b] Fiber spinning lines using spinning solution or suspension containing acrylonitrile.

(b) *Subpart A requirements.* The following provisions of subpart A of this part (General Provisions), §§ 63.1 through 63.5, and §§ 63.12 through 63.15, apply to owners or operators of affected sources subject to this subpart.

(c) *Research and development facilities.* The provisions of this subpart do not apply to research and development facilities, consistent with section 112(b)(7) of the Act.

(d) *Primary product determination and applicability.* The primary product of a process unit shall be determined according to the procedures specified in paragraphs (d)(1) and (2) of this section. Paragraphs (d(3), (4), and (5) of this section discuss compliance for those process units operated as flexible operation units.

(1) If a process unit only manufactures one product, then that product shall represent the primary product of the process unit.

(2) If a process unit is designed and operated as a flexible operation unit, the primary product shall be determined as specified in paragraphs (d)(2)(i) or (ii) of this section based on the anticipated operations for the 5 years following the promulgation date for existing affected sources and for the first 5 years after initial startup for new affected sources.

(i) If the flexible operation unit will manufacture one product for the greatest percentage of operating time over the five-year period, then that product shall represent the primary product of the flexible operation unit.

(ii) If the flexible operation unit will manufacture multiple products equally based on operating time, then the product with the greatest production on a mass basis over the five-year period shall represent the primary product of the flexible operation unit.

(3) Once the primary product of a process unit has been determined to be a product produced by a source category subject to this subpart, the owner or operator of the affected source shall comply with the standards for the primary product production process unit.

(4) The determination of the primary product for a process unit, including the assessment of applicability of this subpart to process units that are designed and operated as flexible operation units, shall be reported in the Notification of Compliance Status Report required by § 63.1110(a)(4) when the primary product is determined to be a product produced by a source category subject to requirements under this subpart. The Notification of Compliance Status shall include the information specified in either paragraph (d)(4)(i) or (ii) of this section. If the primary product is determined to be something other than a product produced by a source category subject to requirements under this subpart, the owner or operator shall retain information, data, and analyses used to document the basis for the determination that the primary product is not produced by a source category subject to requirements under this subpart.

(i) If the process unit manufactures only one product subject to requirements under this subpart, the identity of that product.

(ii) If the process unit is designed and operated as a flexible operation unit, the information specified in paragraphs (d)(4)(ii)(A) through (C) of this section, as appropriate.

(A) The identity of the primary product.

(B) Information concerning operating time and/or production mass for each product that was used to make the determination of the primary product under paragraph (d)(2)(i) or (ii) of this section.

(5) When a flexible operation unit that is subject to this subpart is producing a product other than a product subject to this subpart, or is producing a product subject to this subpart that is not the primary product, the owner or operator shall comply with either paragraph (d)(5) (i) or (ii) of this section for each emission point.

(i) The owner or operator shall control emissions during the production of all products in accordance with the requirements for the production of the primary product. As appropriate, the owner or operator shall demonstrate that the parameter monitoring level established for the primary product is also appropriate for those periods when products other than the primary product are being produced. Documentation of this demonstration shall be submitted in the Notification of Compliance Status report required by § 63.1110(a)(4).

(ii) The owner or operator shall determine, for the production of each product, whether control is required in accordance with the applicable criteria for the primary product in § 63.1103. If control is required, the owner or operator shall establish separate parameter monitoring levels, as appropriate, for the production of each product. The parameter monitoring levels developed shall be submitted in the Notification of Compliance Status report required by § 63.1110(a)(4).

(e) *Storage vessel ownership determination.* To determine the process unit to which a storage vessel shall belong, the owner or operator shall sequentially follow the procedures specified in paragraphs (e)(1) through (8) of this section, stopping as soon as the determination is made.

(1) If a storage vessel is already subject to another subpart of this part on the date of promulgation for an affected source under the generic MACT, that storage vessel shall belong to the process unit subject to the other subpart.

(2) If a storage vessel is dedicated to a single process unit, the storage vessel shall belong to that process unit.

(3) If a storage vessel is shared among process units, then the storage vessel shall belong to that process unit located on the same plant site as the storage vessel that has the greatest input into or output from the storage vessel (i.e., the process unit has the predominant use of the storage vessel.)

(4) If predominant use cannot be determined for a storage vessel that is shared among process units and if only one of those process units is subject to this subpart, the storage vessel shall belong to that process unit.

(5) If predominant use cannot be determined for a storage vessel that is shared among process units and if more than one of the process units are subject to standards under this subpart that

Section 3, Part E, Weight Loss Test Method for the Measurement of Deck-Fitting Loss Factors for Internal Floating-Roof Tanks.

(c) An alternate combination of control devices may be substituted for any combination of rim seal and deck fitting control devices specified in § 63.1063 if the alternate combination emits no more than the combination specified in § 63.1063. The emissions from an alternate combination of control devices shall be determined using AP-42 or as specified in paragraph (b) of this section. The emissions from a combination of control devices specified in § 63.1063 shall be determined using AP-42. Requests for the use of alternate devices shall be made as specified in § 63.1066(b)(3).

§ 63.1065 Recordkeeping requirements.

The owner or operator shall keep the records required in paragraph (a) of this section for as long as liquid is stored. Records required in paragraphs (b), (c) and (d) of this section shall be kept for at least 5 years. Records shall be kept in such a manner that they can be readily accessed within 24 hours. Records may be kept in hard copy or computer-readable form including, but not limited to, on paper, microfilm, computer, floppy disk, magnetic tape, or microfiche.

(a) *Vessel dimensions and capacity.* A record shall be kept of the dimensions of the storage vessel, an analysis of the capacity of the storage vessel, and an identification of the liquid stored.

(b) *Inspection results.* Records of floating roof inspection results shall be kept as specified in paragraphs (b)(1) and (b)(2) of this section.

(1) If the floating roof passes inspection, a record shall be kept that includes the information specified in paragraphs (b)(1)(i) and (b)(1)(ii) of this section. If the floating roof fails inspection, a record shall be kept that includes the information specified in paragraphs (b)(1)(i) through (b)(1)(v) of this section.

(i) Identification of the storage vessel that was inspected.

(ii) The date of the inspection.

(iii) A description of all inspection failures.

(iv) A description of all repairs and the dates they were made.

(v) The date the storage vessel was removed from service, if applicable.

(2) A record shall be kept of EFR seal gap measurements, including the raw data obtained and any calculations performed.

(c) *Floating roof landings.* The owner or operator shall keep a record of the date when a floating roof is set on its legs or other support devices. The owner or operator shall also keep a record of the date when the roof was refloated, and the record shall indicate whether the process of refloating was continuous.

(d) An owner or operator who elects to use an extension in accordance with § 63.1063(e)(2) or § 63.1063(c)(2)(iv)(B) shall keep the documentation required by those paragraphs.

§ 63.1066 Reporting requirements.

(a) *Notification of initial startup.* If the referencing subpart requires that a notification of initial startup be filed, then the content of the notification of initial startup shall include (at a minimum) the information specified in the referencing subpart and the information specified in paragraphs (a)(1) and (a)(2) of this section.

(1) The identification of each storage vessel, its capacity and the liquid stored in the storage vessel.

(2) A statement of whether the owner or operator of the source can achieve compliance by the compliance date specified in referencing subpart.

(b) *Periodic reports.* Report the information specified in paragraphs (b)(1) through (b)(4) of this section, as applicable, in the periodic report specified in the referencing subpart.

(1) *Notification of inspection.* To provide the Administrator the opportunity to have an observer present, the owner or operator shall notify the Administrator at least 30 days before an inspection required by §§ 63.1063(d)(1) or (d)(3). If an inspection is unplanned and the owner or operator could not have known about the inspection 30 days in advance, then the owner or operator shall notify the Administrator at least 7 days before the inspection. Notification shall be made by telephone immediately followed by written documentation demonstrating why the inspection was unplanned. Alternatively, the notification including the written documentation may be made in writing and sent so that it is received by the Administrator at least 7 days before the inspection. If a delegated State or local agency is notified, the owner or operator is not required to notify the Administrator. A delegated State or local agency may waive the requirement for notification of inspections.

(2) *Inspection results.* The owner or operator shall submit a copy of the inspection record (required in § 63.1065) when inspection failures occur.

(3) *Requests for alternate devices.* The owner or operator requesting the use of an alternate control device shall submit a written application including emissions test results and an analysis demonstrating that the alternate device has an emission factor that is less than or equal to the device specified in § 63.1063.

(4) Requests for extensions. An owner or operator who elects to use an extension in accordance with § 63.1063(e)(2) or § 63.1063(c)(2)(iv)(B) shall submit the documentation required by those paragraphs.

6. Part 63 is amended by adding subpart YY, consisting of §§ 63.1100 through 63.1113, to read as follows.

Subpart YY—National Emission Standards for Hazardous Air Pollutants for Source Categories: Generic Maximum Achievable Control Technology Standards

Sec.

63.1100 Applicability.
63.1101 Definitions.
63.1102 Compliance schedule.
63.1103 Source category-specific applicability, definitions, and requirements.
63.1104 Process vents from continuous unit operations: applicability assessment procedures and methods.
63.1105 [Reserved]
63.1106 [Reserved]
63.1107 Equipment leaks: applicability assessment procedures and methods.
63.1108 Compliance with standards and operation and maintenance requirements.
63.1109 Recordkeeping requirements.
63.1110 Reporting requirements.
63.1111 Startup, shutdown, and malfunction.
63.1112 Extension of compliance, and performance test, monitoring, recordkeeping, and reporting waivers and alternatives.
63.1113 Procedures for approval of alternative means of emission limitation.

Subpart YY—National Emission Standards for Hazardous Air Pollutants for Source Categories: Generic Maximum Achievable Control Technology Standards

§ 63.1100 Applicability.

(a) *General.* This subpart applies to source categories and affected sources specified in § 63.1103(a) through (d) of this subpart. The affected emission points, by source category, are summarized in table 1 of this section. This table also delineates the section and paragraph of the rule that directs an owner or operator of an affected source to source category-specific control, monitoring, recordkeeping, and reporting requirements.

than 45 days after determining the floating roof is unsafe. If the vessel cannot be emptied within 45 days, the owner or operator may utilize up to two extensions of up to 30 additional days each. If the vessel cannot be emptied within 45 days, the owner or operator may utilize up to two extensions of up to 30 additional days each. Documentation of a decision to use an extension shall include an explanation of why it was unsafe to perform the inspection, documentation that alternative storage capacity is unavailable, and a schedule of actions that will ensure that the vessel will be emptied as soon as practical.

(d) *Inspection procedure requirements.* Floating roof inspections shall be conducted as specified in paragraphs (d)(1) through (d)(3) of this section, as applicable. If a floating roof fails an inspection, the owner or operator shall comply with the repair requirements of paragraph (e) of this section.

(1) Floating roof (IFR and EFR) inspections shall be conducted by visually inspecting the floating roof deck, deck fittings, and rim seals from within the storage vessel. The inspection may be performed entirely from the top side of the floating roof, as long as there is visual access to all deck components specified in paragraph (a) of this section. Any of the conditions described in paragraphs (d)(1)(i) through (d)(1)(v) of this section constitutes inspection failure.

(i) Stored liquid on the floating roof.

(ii) Holes or tears in the primary or secondary seal (if one is present).

(iii) Floating roof deck, deck fittings, or rim seals that are not functioning as designed (as specified in paragraph (a) of this section).

(iv) Failure to comply with the operational requirements of paragraph (b) of this section.

(v) Gaps of more than 0.32 centimeters (1/8 inch) between any deck fitting gasket, seal, or wiper (required by paragraph (a) of this section) and any surface that it is intended to seal.

(2) Tank-top inspections of IFR's shall be conducted by visually inspecting the floating roof deck, deck fittings, and rim seal through openings in the fixed roof. Any of the conditions described in paragraphs (d)(1)(i) through (d)(1)(iv) of this section constitutes inspection failure. Identification of holes or tears in the rim seal is required only for the seal that is visible from the top of the storage vessel.

(3) Seal gap inspections for EFR's shall determine the presence and size of gaps between the rim seals and the wall of the storage vessel by the procedures specified in paragraph (d)(3)(i) of this section. Any exceedance of the gap requirements specified in paragraphs (d)(3)(ii) and (d)(3)(iii) of this section constitutes inspection failure.

(i) Rim seals shall be measured for gaps at one or more levels while the EFR is floating, as specified in paragraphs (d)(3)(i)(A) through (d)(3)(i)(F) of this section.

(A) The inspector shall hold a 0.32 centimeter (1/8 inch) diameter probe vertically against the inside of the storage vessel wall, just above the rim seal, and attempt to slide the probe down between the seal and the vessel wall. Each location where the probe passes freely (without forcing or binding against the seal) between the seal and the vessel wall constitutes a gap.

(B) The length of each gap shall be determined by inserting the probe into the gap (vertically) and sliding the probe along the vessel wall in each direction as far as it will travel freely without binding between the seal and the vessel wall. The circumferential length along which the probe can move freely is the gap length.

(C) The maximum width of each gap shall be determined by inserting probes of various diameters between the seal and the vessel wall. The smallest probe diameter should be 0.32 centimeter, and larger probes should have diameters in increments of 0.32 centimeter. The diameter of the largest probe that can be inserted freely anywhere along the length of the gap is the maximum gap width.

(D) The average width of each gap shall be determined by averaging the minimum gap width (0.32 centimeter) and the maximum gap width.

(E) The area of a gap is the product of the gap length and average gap width.

(F) The ratio of accumulated area of rim seal gaps to storage vessel diameter shall be determined by adding the area of each gap, and dividing the sum by the nominal diameter of the storage vessel. This ratio shall be determined separately for primary and secondary rim seals.

(ii) The ratio of seal gap area to vessel diameter for the primary seal shall not exceed 212 square centimeters per meter of vessel diameter (10 square inches per foot of vessel diameter), and the maximum gap width shall not exceed 3.81 centimeters (1.5 inches).

(iii) The ratio of seal gap area to vessel diameter for the secondary seal shall not exceed 21.2 square centimeters per meter (1 square inch per foot), and the maximum gap width shall not exceed 1.27 centimeters (0.5 inches), except when the secondary seal must be pulled back or removed to inspect the primary seal.

(e) *Repair requirements.* Conditions causing inspection failures under paragraph (d) of this section shall be repaired as specified in paragraph (e)(1) or (e)(2) of this section.

(1) If the inspection is performed while the storage vessel is not storing liquid, repairs shall be completed before the refilling of the storage vessel with liquid.

(2) If the inspection is performed while the storage vessel is storing liquid, repairs shall be completed or the vessel removed from service within 45 days. If a repair cannot be completed and the vessel cannot be emptied within 45 days, the owner or operator may use up to 2 extensions of up to 30 additional days each. Documentation of a decision to use an extension shall include a description of the failure, shall document that alternate storage capacity is unavailable, and shall specify a schedule of actions that will ensure that the control equipment will be repaired or the vessel will be completely emptied as soon as practical.

§ 63.1064 Alternative means of emission limitation.

(a) An alternate control device may be substituted for a control device specified in § 63.1063 if the alternate device has an emission factor less than or equal to the emission factor for the device specified in § 63.1063. Requests for the use of alternate devices shall be made as specified in § 63.1066(b)(3). Emission factors for the devices specified in § 63.1063 are published in EPA Report No. AP-42, Compilation of Air Pollutant Emission Factors.

(b) Tests to determine emission factors for an alternate device shall accurately simulate conditions under which the device will operate, such as wind, temperature, and barometric pressure. Test methods that can be used to perform the testing required in this paragraph include, but are not limited to, the methods listed in paragraphs (b)(1) through (b)(3) of this section.

(1) American Petroleum Institute (API) Manual of Petroleum Measurement Standards, Chapter 19, Section 3, Part A, Wind Tunnel Test Method for the Measurement of Deck-Fitting Loss Factors for External Floating-Roof Tanks.

(2) API Manual of Petroleum Measurement Standards, Chapter 19, Section 3, Part B, Air Concentration Test Method for the Measurement of Rim Seal Loss Factors for Floating-Roof Tanks.

(3) API Manual of Petroleum Measurement Standards, Chapter 19,

in paragraph (a)(1) or (a)(2) of this section, as provided in § 63.1064.

(b) [Reserved]

§ 63.1063 Floating roof requirements.

The owner or operator who elects to use a floating roof to comply with the requirements of § 63.1062 shall comply with the requirements in paragraphs (a) through (e) of this section.

(a) *Design requirements.* (1) *Rim seals.* (i) *Internal floating roof.* An IFR shall be equipped with one of the seal configurations listed in paragraphs (a)(1)(i)(A) through (a)(1)(i)(C) of this section.

(A) A liquid-mounted seal.

(B) A mechanical shoe seal.

(C) Two seals mounted one above the other. The lower seal may be vapor-mounted.

(D) If the IFR is equipped with a vapor-mounted seal as of the proposal date for a referencing subpart, paragraphs (a)(1)(i)(A) through (a)(1)(i)(C) of this section do not apply until the next time the storage vessel is completely emptied and degassed, or 10 years after promulgation of the referencing subpart, whichever occurs first.

(ii) *External floating roof.* An EFR shall be equipped with one of the seal configurations listed in paragraphs (a)(1)(ii)(A) and (a)(1)(ii)(B) of this section.

(A) A liquid-mounted seal and a secondary seal.

(B) A mechanical shoe seal and a secondary seal. The upper end of the shoe(s) shall extend a minimum of 61 centimeters (24 inches) above the stored liquid surface.

(C) If the EFR is equipped with a liquid-mounted seal or mechanical shoe seal, or a vapor-mounted seal and secondary seal, as of the proposal date for a referencing subpart, the seal options specified in paragraphs (a)(1)(ii)(A) and (a)(1)(ii)(B) of this section do not apply until the next time the storage vessel is completely emptied and degassed, or 10 years after the promulgation date of the referencing subpart, whichever occurs first.

(2) *Deck fittings.* Openings through the deck of the floating roof shall be equipped as described in paragraphs (a)(2)(i) through (a)(2)(viii) of this section.

(i) Each opening except those for automatic bleeder vents (vacuum breaker vents) and rim space vents shall have its lower edge below the surface of the stored liquid.

(ii) Each opening except those for automatic bleeder vents (vacuum breaker vents), rim space vents, leg sleeves, and deck drains shall be equipped with a deck cover. The deck cover shall be equipped with a gasket between the cover and the deck.

(iii) Each automatic bleeder vent (vacuum breaker vent) and rim space vent shall be equipped with a gasketed lid, pallet, flapper, or other closure device.

(iv) Each opening for a fixed roof support column may be equipped with a flexible fabric sleeve seal instead of a deck cover.

(v) Each opening for a sample well or deck drain (that empties into the stored liquid) may be equipped with a slit fabric seal or similar device that covers at least 90 percent of the opening, instead of a deck cover.

(vi) Each cover on access hatches and gauge float wells shall be designed to be bolted or fastened when closed.

(vii) Each opening for an unslotted guidepole shall be equipped with a pole wiper, and each unslotted guidepole shall be equipped with a gasketed cap on the top of the guidepole.

(viii) Each opening for a slotted guidepole shall be equipped with one of the control device configurations specified in paragraphs (a)(2)(viii)(A) and (a)(2)(viii)(B) of this section.

(A) A pole wiper and a pole float. The wiper or seal of the pole float shall be at or above the height of the pole wiper.

(B) A pole wiper and a pole sleeve.

(ix) If the floating roof does not meet the requirements listed in paragraphs (a)(2)(i) through (a)(2)(viii) of this section as of the proposal date of the referencing subpart, these requirements do not apply until the next time the vessel is completely emptied and degassed, or 10 years after the promulgation date of the referencing subpart, whichever occurs first.

(b) *Operational requirements.* (1) The floating roof shall float on the stored liquid surface at all times, except when the floating roof is supported by its leg supports or other support devices (e.g., hangers from the fixed roof).

(2) When the storage vessel is storing liquid, but the liquid depth is insufficient to float the floating roof, the process of filling to the point of refloating the floating roof shall be continuous and shall be performed as soon as practical.

(3) Each cover over an opening in the floating roof, except for automatic bleeder vents (vacuum breaker vents) and rim space vents, shall be closed at all times, except when the cover must be open for access.

(4) Each automatic bleeder vent (vacuum breaker vent) and rim space vent shall be closed at all times, except when required to be open to relieve excess pressure or vacuum, in accordance with the manufacturer's design.

(5) Each unslotted guidepole cap shall be closed at all times except when gauging the liquid level or taking liquid samples.

(c) *Inspection frequency requirements.* (1) *Internal floating roofs.* Internal floating roofs shall be inspected as specified in paragraph (d)(1) of this section before the initial filling of the storage vessel. Subsequent inspections shall be performed as specified in paragraph (c)(1)(i) or (c)(1)(ii) of this section.

(i) Internal floating roofs shall be inspected as specified in paragraphs (c)(1)(i)(A) and (c)(1)(i)(B) of this section.

(A) At least once per year the IFR shall be inspected as specified in paragraph (d)(2) of this section.

(B) Each time the storage vessel is completely emptied and degassed, or every 10 years, whichever occurs first, the IFR shall be inspected as specified in paragraph (d)(1) of this section.

(ii) Instead of the inspection frequency specified in paragraph (c)(1)(i) of this section, internal floating roofs with two rim seals may be inspected as specified in paragraph (d)(1) of this section each time the storage vessel is completely emptied and degassed, or every 5 years, whichever occurs first.

(2) *External floating roofs.* External floating roofs shall be inspected as specified in paragraphs (c)(2)(i) through (c)(2)(iv) of this section.

(i) Within 90 days after the initial filling of the storage vessel, the primary and secondary rim seals shall be inspected as specified in paragraph (d)(3) of this section.

(ii) The secondary seal shall be inspected at least once every year, and the primary seal shall be inspected at least every 5 years, as specified in paragraph (d)(3) of this section.

(iii) Each time the storage vessel is completely emptied and degassed, or every 10 years, whichever occurs first, the EFR shall be inspected as specified in paragraph (d)(1) of this section.

(iv) If the owner or operator determines that it is unsafe to perform the floating roof inspections specified in paragraphs (c)(2)(i) and (c)(2)(ii) of this section, the owner or operator shall comply with the requirements of paragraph (c)(2)(iv)(A) or (c)(2)(iv)(B) of this section.

(A) The inspections shall be performed no later than 30 days after the determination that the floating roof is unsafe.

(B) The storage vessel shall be removed from liquid service no later

TABLE 1 TO SUBPART UU.—BATCH PROCESSES MONITORING FREQUENCY FOR EQUIPMENT OTHER THAN CONNECTORS—Continued

Operating time (% of year)	Equivalent continuous process monitoring frequency time in use		
	Monthly	Quarterly	Semiannually
75 to 100%	Monthly	Quarterly	Semiannually.

5. Part 63 is amended by adding subpart WW, consisting of §§ 63.1060 through 63.1066, to read as follows.

Subpart WW—National Emission Standards for Storage Vessels (Tanks)—Control Level 2

Sec.
63.1060 Applicability.
63.1061 Definitions.
63.1062 Storage vessel control requirements.
63.1063 Floating roof requirements.
63.1064 Alternative means of emission limitation.
63.1065 Recordkeeping requirements.
63.1066 Reporting requirements.

Subpart WW—National Emission Standards for Storage Vessels (Tanks)—Control Level 2

§ 63.1060 Applicability.

The provisions of this subpart apply to the control of air emissions from storage vessels for which another subpart references the use of this subpart for such air emission control. These air emission standards for storage vessels are placed here for administrative convenience and only apply to those owners and operators of facilities subject to a referencing subpart. The provisions of subpart A (General Provisions) of this part do not apply to this subpart except as noted in the referencing subpart.

§ 63.1061 Definitions.

All terms used in this subpart shall have the meaning given them in the Act and in this section.

Capacity means the volume of liquid that is capable of being stored in a vessel, determined by multiplying the vessel's internal cross-sectional area by the internal height of the shell.

Deck cover means a device which covers an opening in a floating roof deck. Some deck covers move horizontally relative to the deck (i.e., a sliding cover).

Empty or *emptying* means the partial or complete removal of stored liquid from a storage vessel. Storage vessels that contain liquid only as wall or bottom clingage, or in pools due to bottom irregularities, are considered completely empty.

External floating roof or *EFR* means a floating roof located in a storage vessel without a fixed roof.

Fill or *filling* means the introduction of liquid into a storage vessel, but not necessarily to capacity.

Fixed roof means a roof that is mounted (i.e., permanently affixed) on a storage vessel and that does not move with fluctuations in stored liquid level.

Flexible fabric sleeve seal means a seal made of an elastomeric fabric (or other material) which covers an opening in a floating roof deck, and which allows the penetration of a fixed roof support column. The seal is attached to the rim of the deck opening and extends to the outer surface of the column. The seal is draped (but does not contact the stored liquid) to allow the horizontal movement of the deck relative to the column.

Floating roof means a roof that floats on the surface of the liquid in a storage vessel. A floating roof substantially covers the stored liquid surface (but is not necessarily in contact with the entire surface), and is comprised of a deck, a rim seal, and miscellaneous deck fittings.

Initial fill or *initial filling means* the first introduction of liquid into a storage vessel that is either newly constructed or has not been in liquid service for a year or longer.

Internal floating roof or *IFR* means a floating roof located in a storage vessel with a fixed roof. For the purposes of this subpart, an external floating roof located in a storage vessel to which a fixed roof has been added is considered to be an internal floating roof.

Liquid-mounted seal means a resilient or liquid-filled rim seal designed to contact the stored liquid.

Mechanical shoe seal or *metallic shoe seal* means a rim seal consisting of a band of metal (or other suitable material) as the sliding contact with the wall of the storage vessel, and a fabric seal to close the annular space between the band and the rim of the floating roof deck. The band is typically formed as a series of sheets (shoes) that are overlapped or joined together to form a ring. The lower end of the band extends into the stored liquid.

Pole float means a float located inside a guidepole that floats on the surface of the stored liquid. The rim of the float has a wiper or seal that extends to the inner surface of the pole.

Pole sleeve means a device which extends from either the cover or the rim of an opening in a floating roof deck to the outer surface of a pole that passes through the opening. The sleeve extends into the stored liquid.

Pole wiper means a seal that extends from either the cover or the rim of an opening in a floating roof deck to the outer surface of a pole that passes through the opening.

Referencing subpart means the subpart that refers an owner or operator to this subpart.

Rim seal means a device attached to the rim of a floating roof deck that spans the annular space between the deck and the wall of the storage vessel. When a floating roof has only one such device, it is a primary seal; when there are two seals (one mounted above the other), the lower seal is the primary seal and the upper seal is the secondary seal.

Slotted guidepole means a guidepole or gaugepole that has slots or holes through the wall of the pole. The slots or holes allow the stored liquid to flow into the pole at liquid levels above the lowest operating level.

Storage vessel or *Tank* means a stationary unit that is constructed primarily of nonearthen materials (such as wood, concrete, steel, fiberglass, or plastic) which provide structural support and is designed to hold an accumulation of liquids or other materials.

Vapor-mounted seal means a rim seal designed not to be in contact with the stored liquid. Vapor-mounted seals may include, but are not limited to, resilient seals and flexible wiper seals.

§ 63.1062 Storage vessel control requirements.

(a) For each storage vessel to which this subpart applies, the owner or operator shall comply with one of the requirements listed in paragraphs (a)(1) through (a)(3) of this section.

(1) Operate and maintain an IFR.

(2) Operate and maintain an EFR.

(3) *Equivalent requirements.* Comply with an equivalent to the requirements

owner or operator shall keep records of the dates and results of monitoring following a pressure release, as specified in § 63.1030(c)(3).

(6) For compressors, the owner or operator shall maintain the records specified in paragraphs (c)(6)(i) and (c)(6)(ii) of this section.

(i) For criteria as to failure of the seal system and/or the barrier fluid system, record the design criteria and explanations and any changes and the reason for the changes, as specified in § 63.1031(d)(2).

(ii) For compressors operating under the alternative compressor standard, record the dates and results of each compliance test as specified in § 63.1031(f)(2).

(7) For a pump QIP program, the owner or operator shall maintain the records specified in paragraphs (c)(7)(i) through (c)(7)(v) of this section.

(i) Individual pump records as specified in § 63.1035(d)(2).

(ii) Trial evaluation program documentation as specified in § 63.1035(d)(6)(iii).

(iii) Engineering evaluation documenting the basis for judgement that superior emission performance technology is not applicable as specified in § 63.1035(d)(6)(vi).

(iv) Quality assurance program documentation as specified in § 63.1035(d)(7).

(v) QIP records as specified in § 63.1035(e).

(8) For process units complying with the batch process unit alternative, the owner or operator shall maintain the records specified in paragraphs (c)(8)(i) and (c)(8)(ii) of this section.

(i) Pressure test records as specified in § 63.1036(b)(7).

(ii) Records for equipment added to the process unit as specified in § 63.1036(d).

(9) For process units complying with the enclosed-vented process unit alternative, the owner or operator shall maintain the records for enclosed-vented process units as specified in § 63.1037(b).

§ 63.1039 Reporting requirements.

(a) *Initial Compliance Status Report.* Each owner or operator shall submit an Initial Compliance Status Report according to the procedures in the referencing subpart. The notification shall include the information listed in paragraphs (a)(1) through (a)(3) of this section, as applicable.

(1) The notification shall provide the information listed in paragraphs (a)(1)(i) through (a)(1)(iv) of this section for each process unit or affected facility subject to the requirements of this subpart.

(i) Process unit or affected facility identification.

(ii) Number of each equipment type (e.g., valves, pumps) excluding equipment in vacuum service.

(iii) Method of compliance with the standard (e.g., "monthly leak detection and repair" or "equipped with dual mechanical seals").

(iv) Planned schedule for requirements in §§ 63.1025 and 63.1026.

(2) The notification shall provide the information listed in paragraphs (a)(2)(i) and (a)(2)(ii) of this section for each process unit or affected facility subject to the requirements of § 63.1036(b).

(i) Batch products or product codes subject to the provisions of this subpart, and

(ii) Planned schedule for pressure testing when equipment is configured for production of products subject to the provisions of this subpart.

(3) The notification shall provide the information listed in paragraphs (a)(3)(i) and (a)(3)(ii) of this section for each process unit or affected facility subject to the requirements in § 63.1037.

(i) Process unit or affected facility identification.

(ii) A description of the system used to create a negative pressure in the enclosure and the control device used to comply with the requirements of § 63.1034 of this part.

(b) *Periodic Reports.* The owner or operator shall report the information specified in paragraphs (b)(1) through (b)(8) of this section, as applicable, in the Periodic Report specified in the referencing subpart.

(1) For the equipment specified in paragraphs (b)(1)(i) through (b)(1)(v) of this section, report in a summary format by equipment type, the number of components for which leaks were detected and for valves, pumps and connectors show the percent leakers, and the total number of components monitored. Also include the number of leaking components that were not repaired as required by § 63.1024, and for valves and connectors, identify the number of components that are determined by § 63.1025(c)(3) to be nonrepairable.

(i) Valves in gas and vapor service and in light liquid service pursuant to § 63.1025(b) and (c).

(ii) Pumps in light liquid service pursuant to § 63.1026(b) and (c).

(iii) Connectors in gas and vapor service and in light liquid service pursuant to § 63.1027(b) and (c).

(iv) Agitators in gas and vapor service and in light liquid service pursuant to § 63.1028(c).

(v) Compressors pursuant to § 63.1031(d).

(2) Where any delay of repair is utilized pursuant to § 63.1024(d), report that delay of repair has occurred and report the number of instances of delay of repair.

(3) If applicable, report the valve subgrouping information specified in § 63.1025(b)(4)(iv).

(4) For pressure relief devices in gas and vapor service pursuant to § 63.1030(b) and for compressors pursuant to § 63.1031(f) that are to be operated at a leak detection instrument reading of less than 500 parts per million, report the results of all monitoring to show compliance conducted within the semiannual reporting period.

(5) Report, if applicable, the initiation of a monthly monitoring program for valves pursuant to § 63.1025(b)(3)(i).

(6) Report, if applicable, the initiation of a quality improvement program for pumps pursuant to § 63.1035.

(7) Where the alternative means of emissions limitation for batch processes is utilized, report the information listed in § 63.1036(f).

(8) Report the information listed in paragraph (a) of this section for the Initial Compliance Status Report for process units or affected facilities with later compliance dates. Report any revisions to items reported in an earlier Initial Compliance Status Report if the method of compliance has changed since the last report.

TABLE 1 TO SUBPART UU.—BATCH PROCESSES MONITORING FREQUENCY FOR EQUIPMENT OTHER THAN CONNECTORS

Operating time (% of year)	Equivalent continuous process monitoring frequency time in use		
	Monthly	Quarterly	Semiannually
0 to <25%	Quarterly	Annually	Annually.
25 to <50%	Quarterly	Semiannually	Annually.
50 to <75%	Bimonthly	Three times	Semiannually.

detected, except as provided in paragraph (e) of this section.

(d) *Added equipment recordkeeping.* (1) For batch product-process units or affected facilities that the owner or operator elects to monitor as provided under paragraph (c) of this section, the owner or operator shall prepare a list of equipment added to batch product process units or affected facilities since the last monitoring period required in paragraphs (c)(3)(ii) and (c)(3)(iii) of this section.

(2) Maintain records demonstrating the proportion of the time during the calendar year the equipment is in use in a batch process that is subject to the provisions of this subpart. Examples of suitable documentation are records of time in use for individual pieces of equipment or average time in use for the process unit or affected facility. These records are not required if the owner or operator does not adjust monitoring frequency by the time in use, as provided in paragraph (c)(3)(iii) of this section.

(3) Record and keep pursuant to the referencing subpart and this subpart, the date and results of the monitoring required in paragraph (c)(3)(i) of this section for equipment added to a batch product-process unit or affected facility since the last monitoring period required in paragraphs (c)(3)(ii) and (c)(3)(iii) of this section. If no leaking equipment is found during this monitoring, the owner or operator shall record that the inspection was performed. Records of the actual monitoring results are not required.

(e) *Delay of repair.* Delay of repair of equipment for which leaks have been detected is allowed if the replacement equipment is not available providing the conditions specified in paragraphs (e)(1) and (e)(2) of this section are met.

(1) Equipment supplies have been depleted and supplies had been sufficiently stocked before the supplies were depleted.

(2) The repair is made no later than 10 calendar days after delivery of the replacement equipment.

(f) *Periodic report contents.* For owners or operators electing to meet the requirements of paragraph (b) of this section, the Periodic Report to be filed pursuant to § 63.1039(b) shall include the information listed in paragraphs (f)(1) through (f)(4) of this section for each process unit.

(1) Batch product process equipment train identification;

(2) The number of pressure tests conducted;

(3) The number of pressure tests where the equipment train failed the pressure test; and (4) The facts that explain any delay of repairs.

§ 63.1037 Alternative means of emission limitation: Enclosed-vented process units or affected facilities.

(a) *Use of closed vent system and control device.* Process units or affected facilities or portions of process units at affected facilities enclosed in such a manner that all emissions from equipment leaks are vented through a closed vent system to a control device or routed to a fuel gas system or process meeting the requirements of § 63.1034 are exempt from the requirements of §§ 63.1025 through 63.1033 and 63.1035. The enclosure shall be maintained under a negative pressure at all times while the process unit or affected facility is in operation to ensure that all emissions are routed to a control device.

(b) *Recordkeeping.* Owners and operators choosing to comply with the requirements of this section shall maintain the records specified in paragraphs (b)(1) through (b)(3) of this section.

(1) Identification of the process unit(s) or affected facilities and the regulated materials they handle.

(2) A schematic of the process unit or affected facility, enclosure, and closed vent system.

(3) A description of the system used to create a negative pressure in the enclosure to ensure that all emissions are routed to the control device.

§ 63.1038 Recordkeeping requirements.

(a) *Recordkeeping system.* An owner or operator of more than one regulated source subject to the provisions of this subpart may comply with the recordkeeping requirements for these regulated sources in one recordkeeping system. The recordkeeping system shall identify each record by regulated source and the type of program being implemented (e.g., quarterly monitoring, quality improvement) for each type of equipment. The records required by this subpart are summarized in paragraphs (b) and (c) of this section.

(b) *General equipment leak records.* (1) As specified in § 63.1022(a) and (b), the owner or operator shall keep general and specific equipment identification if the equipment is not physically tagged and the owner or operator is electing to identify the equipment subject to this subpart through written documentation such as a log or other designation.

(2) The owner or operator shall keep a written plan as specified in § 63.1022(c)(4) for any equipment that is designated as unsafe- or difficult-to-monitor.

(3) The owner or operator shall maintain a record of the identity and an explanation as specified in § 63.1022(d)(2) for any equipment that is designated as unsafe-to-repair.

(4) As specified in § 63.1022(e), the owner or operator shall maintain the identity of compressors operating with an instrument reading of less than 500 parts per million.

(5) The owner or operator shall keep records associated with the determination that equipment is in heavy liquid service as specified in § 63.1022(f).

(6) The owner or operator shall keep records for leaking equipment as specified in § 63.1023(e)(2).

(7) The owner or operator shall keep records for leak repair as specified in § 63.1024(f) and records for delay of repair as specified in § 63.1024(d).

(c) *Specific equipment leak records.* (1) For valves, the owner or operator shall maintain the records specified in paragraphs (c)(1)(i) and (c)(1)(ii) of this section.

(i) The monitoring schedule for each process unit as specified in § 63.1025(b)(3)(vi).

(ii) The valve subgrouping records specified in § 63.1025(b)(4)(iv), if applicable.

(2) For pumps, the owner or operator shall maintain the records specified in paragraphs (c)(2)(i) through (c)(2)(iii) of this section.

(i) Documentation of pump visual inspections as specified in § 63.1026(b)(4).

(ii) Documentation of dual mechanical seal pump visual inspections as specified in § 63.1026(e)(1)(v).

(iii) For the criteria as to the presence and frequency of drips for dual mechanical seal pumps, records of the design criteria and explanations and any changes and the reason for the changes, as specified in § 63.1026(e)(1)(i).

(3) For connectors, the owner or operator shall maintain the monitoring schedule for each process unit as specified in § 63.1027(b)(3)(v).

(4) For agitators, the owner or operator shall maintain the following records:

(i) Documentation of agitator seal visual inspections as specified in § 63.1028; and

(ii) For the criteria as to the presence and frequency of drips for agitators, the owner or operator shall keep records of the design criteria and explanations and any changes and the reason for the changes, as specified in § 63.1028(e)(1)(vi).

(5) For pressure relief devices in gas and vapor or light liquid service, the

test except as specified in paragraph (e) of this section.

(5) *Gas pressure test procedure for pressure or vacuum loss.* The procedures specified in paragraphs (b)(5)(i) through (b)(5)(v) of this section shall be used to pressure test batch product-process equipment for pressure or vacuum loss to demonstrate compliance with the requirements of paragraph (b)(3)(i) of this section.

(i) The batch product-process equipment train shall be pressurized with a gas to a pressure less than the set pressure of any safety relief devices or valves or to a pressure slightly above the operating pressure of the equipment, or alternatively the equipment shall be placed under a vacuum.

(ii) Once the test pressure is obtained, the gas source or vacuum source shall be shut off.

(iii) The test shall continue for not less than 15 minutes unless it can be determined in a shorter period of time that the allowable rate of pressure drop or of pressure rise was exceeded. The pressure in the batch product-process equipment shall be measured after the gas or vacuum source is shut off and at the end of the test period. The rate of change in pressure in the batch product-process equipment shall be calculated using the following equation:

$$\Delta(P/t) = \left(|P_f - P_i|\right)/(t_f - t_i) \qquad \text{[Eq. 5]}$$

Where:

Δ (P/t) = Change in pressure, pounds per square inch gauge per hour.

P_f = Final pressure, pounds per square inch gauge.

P_i = Initial pressure, pounds per square inch gauge.

$t_f - t_i$ = Elapsed time, hours.

(iv) The pressure shall be measured using a pressure measurement device (gauge, manometer, or equivalent) that has a precision of ±2.5 millimeter mercury (0.10 inch of mercury) in the range of test pressure and is capable of measuring pressures up to the relief set pressure of the pressure relief device. If such a pressure measurement device is not reasonably available, the owner or operator shall use a pressure measurement device with a precision of at least ± 10 percent of the test pressure of the equipment and shall extend the duration of the test for the time necessary to detect a pressure loss or rise that equals a rate of 1 pound per square inch gauge per hour (7 kilopascals per hour).

(v) An alternative procedure may be used for leak testing the equipment if the owner or operator demonstrates the alternative procedure is capable of detecting a pressure loss or rise.

(6) *Pressure test procedure using test liquid.* The procedures specified in paragraphs (b)(6)(i) through (b)(6)(iv) of this section shall be used to pressure-test batch product-process equipment using a liquid to demonstrate compliance with the requirements of paragraph (b)(3)(ii) of this section.

(i) The batch product-process equipment train, or section of the equipment train, shall be filled with the test liquid (e.g., water, alcohol) until normal operating pressure is obtained. Once the equipment is filled, the liquid source shall be shut off.

(ii) The test shall be conducted for a period of at least 60 minutes, unless it can be determined in a shorter period of time that the test is a failure.

(iii) Each seal in the equipment being tested shall be inspected for indications of liquid dripping or other indications of fluid loss. If there are any indications of liquids dripping or of fluid loss, a leak is detected.

(iv) An alternative procedure may be used for leak testing the equipment, if the owner or operator demonstrates the alternative procedure is capable of detecting losses of fluid.

(7) *Pressure testing recordkeeping.* The owner or operator of a batch product process who elects to pressure test the batch product process equipment train to demonstrate compliance with this subpart shall maintain records of the information specified in paragraphs (b)(7)(i) through (b)(7)(v) of this section.

(i) The identification of each product, or product code, produced during the calendar year. It is not necessary to identify individual items of equipment in a batch product process equipment train.

(ii) Physical tagging of the equipment to identify that it is in regulated material service and subject to the provisions of this subpart is not required. Equipment in a batch product process subject to the provisions of this subpart may be identified on a plant site plan, in log entries, or by other appropriate methods.

(iii) The dates of each pressure test required in paragraph (b) of this section, the test pressure, and the pressure drop observed during the test.

(iv) Records of any visible, audible, or olfactory evidence of fluid loss.

(v) When a batch product process equipment train does not pass two consecutive pressure tests, the information specified in paragraphs (b)(7)(v)(A) through (b)(7)(v)(E) of this section shall be recorded in a log and kept for 2 years:

(A) The date of each pressure test and the date of each leak repair attempt.

(B) Repair methods applied in each attempt to repair the leak.

(C) The reason for the delay of repair.

(D) The expected date for delivery of the replacement equipment and the actual date of delivery of the replacement equipment; and

(E) The date of successful repair.

(c) *Equipment monitoring.* The following requirements shall be met if an owner or operator elects to monitor the equipment in a batch process to detect leaks by the method specified in § 63.1023(b) and, as applicable, § 63.1023(c), to demonstrate compliance with this subpart.

(1) The owner or operator shall comply with the requirements of §§ 63.1025 through 63.1035 as modified by paragraphs (c)(2) through (c)(4) of this section.

(2) The equipment shall be monitored for leaks by the method specified in § 63.1023(b) and, as applicable, § 63.1023(c), when the equipment is in regulated material service or is in use with any other detectable material.

(3) The equipment shall be monitored for leaks as specified in paragraphs (c)(3)(i) through (c)(3)(iv) of this section.

(i) Each time the equipment is reconfigured for the production of a new product, the reconfigured equipment shall be monitored for leaks within 30 days of start-up of the process. This initial monitoring of reconfigured equipment shall not be included in determining percent leaking equipment in the process unit or affected facility.

(ii) Connectors shall be monitored in accordance with the requirements in § 63.1027.

(iii) Equipment other than connectors shall be monitored at the frequencies specified in table 1 to this subpart. The operating time shall be determined as the proportion of the year the batch product-process that is subject to the provisions of this subpart is operating.

(iv) The monitoring frequencies specified in paragraph (c)(3)(iii) of this section are not requirements for monitoring at specific intervals and can be adjusted to accommodate process operations. An owner or operator may monitor anytime during the specified monitoring period (e.g., month, quarter, year), provided the monitoring is conducted at a reasonable interval after completion of the last monitoring campaign. For example, if the equipment is not operating during the scheduled monitoring period, the monitoring can be done during the next period when the process is operating.

(4) If a leak is detected, it shall be repaired as soon as practical but not later than 15 calendar days after it is

(8) *Pump or pump seal replacement.* Three years after the start of the quality improvement program for plant sites with 400 or more valves or 100 or more employees and at the start of the fourth year of the quality improvement program for plant sites with less than 400 valves and less than 100 employees, the owner or operator shall replace, as described in paragraphs (d)(8)(i) and (d)(8)(ii) of this section, the pumps or pump seals that are not superior emission performance technology with pumps or pump seals that have been identified as superior emission performance technology and that comply with the quality assurance standards for the pump category. Superior emission performance technology is that category or design of pumps or pump seals with emission performance that when combined with appropriate process, operating, and maintenance practices, will result in less than 10 percent leaking pumps for specific applications in the process unit, affected facility, or plant site. Superior emission performance technology includes material or design changes to the existing pump, pump seal, seal support system, installation of multiple mechanical seals or equivalent, or pump replacement.

(i) Pumps or pump seals shall be replaced at the rate of 20 percent per year based on the total number of pumps in light liquid service. The calculated value shall be rounded to the nearest nonzero integer value. The minimum number of pumps or pump seals shall be one. Pump replacement shall continue until all pumps subject to the requirements of § 63.1026 are pumps determined to be superior performance technology.

(ii) The owner or operator may delay replacement of pump seals or pumps with superior technology until the next planned process unit or affected facility shutdown, provided the number of pump seals and pumps replaced is equivalent to the 20 percent or greater annual replacement rate.

(iii) The pumps shall be maintained as specified in the quality assurance program.

(e) *QIP recordkeeping.* In addition to the records required by paragraph (d)(2) of this section, the owner or operator shall maintain records for the period of the quality improvement program for the process unit or affected facility as specified in paragraphs (e)(1) through (e)(6) of this section.

(1) When using a pump quality improvement program as specified in this section, record the information specified in paragraphs (e)(1)(i) through (e)(1)(iii) of this section.

(i) The rolling average percent leaking pumps.

(ii) Documentation of all inspections conducted under the requirements of paragraph (d)(4) of this section, and any recommendations for design or specification changes to reduce leak frequency.

(iii) The beginning and ending dates while meeting the requirements of paragraph (d) of this section.

(2) If a leak is not repaired within 15 calendar days after discovery of the leak, the reason for the delay and the expected date of successful repair.

(3) Records of all analyses required in paragraph (d) of this section. The records will include the information specified in paragraphs (e)(3)(i) through (e)(3)(iv) of this section.

(i) A list identifying areas associated with poorer than average performance and the associated service characteristics of the stream, the operating conditions and maintenance practices.

(ii) The reasons for rejecting specific candidate superior emission performing pump technology from performance trials.

(iii) The list of candidate superior emission performing valve or pump technologies, and documentation of the performance trial program items required under paragraph (d)(6)(iii) of this section.

(iv) The beginning date and duration of performance trials of each candidate superior emission performing technology.

(4) All records documenting the quality assurance program for pumps as specified in paragraph (d)(7) of this section, including records indicating that all pumps replaced or modified during the period of the quality improvement program are in compliance with the quality assurance.

(5) Records documenting compliance with the 20 percent or greater annual replacement rate for pumps as specified in paragraph (d)(8) of this section.

(6) Information and data to show the corporation has fewer than 100 employees, including employees providing professional and technical contracted services.

§ 63.1036 Alternative means of emission limitation: Batch processes.

(a) *General requirement.* As an alternative to complying with the requirements of §§ 63.1025 through 63.1033 and § 63.1035, an owner or operator of a batch process that operates in regulated material service during the calendar year may comply with one of the standards specified in paragraphs (b) and (c) of this section, or the owner or operator may petition for approval of an alternative standard under the provisions of § 63.1021(b). The alternative standards of this section provide the options of pressure testing or monitoring the equipment for leaks. The owner or operator may switch among the alternatives provided the change is documented as specified in paragraph (b)(7) of this section.

(b) *Pressure testing of the batch equipment.* The following requirements shall be met if an owner or operator elects to use pressure testing of batch product-process equipment to demonstrate compliance with this subpart.

(1) *Reconfiguration.* Each time equipment is reconfigured for production of a different product or intermediate, the batch product-process equipment train shall be pressure-tested for leaks before regulated material is first fed to the equipment and the equipment is placed in regulated material service.

(i) When the batch product-process equipment train is reconfigured to produce a different product, pressure testing is required only for the new or disturbed equipment.

(ii) Each batch product process that operates in regulated material service during a calendar year shall be pressure-tested at least once during that calendar year.

(iii) Pressure testing is not required for routine seal breaks, such as changing hoses or filters, that are not part of the reconfiguration to produce a different product or intermediate.

(2) *Testing procedures.* The batch product process equipment shall be tested either using the procedures specified in paragraph (b)(5) of this section for pressure vacuum loss or with a liquid using the procedures specified in paragraph (b)(6) of this section.

(3) *Leak detection.* (i) For pressure or vacuum tests using a gas, a leak is detected if the rate of change in pressure is greater than 6.9 kilopascals (1 pound per square inch gauge) in 1 hour or if there is visible, audible, or olfactory evidence of fluid loss.

(ii) For pressure tests using a liquid, a leak is detected if there are indications of liquids dripping or if there is other evidence of fluid loss.

(4) *Leak repair.* (i) If a leak is detected, it shall be repaired and the batch product-process equipment shall be retested before start-up of the process.

(ii) If a batch product-process fails the retest (the second of two consecutive pressure tests), it shall be repaired as soon as practical, but not later than 30 calendar days after the second pressure

site, a company, or a group of process units.

(v) The first analysis of the data shall be completed no later than 18 months after the start of the quality improvement program. The first analysis shall be performed using data collected for a minimum of 6 months. An analysis of the data shall be done each year the process unit or affected facility is in the quality improvement program.

(6) *Trial evaluation program.* A trial evaluation program shall be conducted at each plant site for which the data analysis does not identify use of superior performing pump seal technology or pumps that can be applied to the areas identified as having poorer than average performance, except as provided in paragraph (d)(6)(v) of this section. The trial program shall be used to evaluate the feasibility of using in the process unit or affected facility (or plant site) the pump designs or seal technologies, and operating and maintenance practices that have been identified by others as having low emission performance.

(i) The trial evaluation program shall include on-line trials of pump seal technologies or pump designs and operating and maintenance practices that have been identified in the available literature or in analysis by others as having the ability to perform with leak rates below 10 percent in similar services, as having low probability of failure, or as having no external actuating mechanism in contact with the process fluid. If any of the candidate superior performing pump seal technologies or pumps is not included in the performance trials, the reasons for rejecting specific technologies from consideration shall be documented as required in paragraph (e)(3)(ii) of this section.

(ii) The number of pump seal technologies or pumps in the trial evaluation program shall be the lesser of 1 percent or two pumps for programs involving single process units or affected facilities and the lesser of 1 percent or five pumps for programs involving a plant site or groups of process units or affected facilities. The minimum number of pumps or pump seal technologies in a trial program shall be one.

(iii) The trial evaluation program shall specify and include documentation of the information specified in paragraphs (d)(6)(iii)(A) through (d)(6)(iii)(D) of this section.

(A) The candidate superior performing pump seal designs or technologies to be evaluated, the stages for evaluating the identified candidate pump designs or pump seal technologies, including the time period necessary to test the applicability;

(B) The frequency of monitoring or inspection of the equipment;

(C) The range of operating conditions over which the component will be evaluated; and

(D) Conclusions regarding the emission performance and the appropriate operating conditions and services for the trial pump seal technologies or pumps.

(iv) The performance trials shall initially be conducted, at least, for a 6-month period beginning not later than 18 months after the start of the quality improvement program. No later than 24 months after the start of the quality improvement program, the owner or operator shall have identified pump seal technologies or pump designs that, combined with appropriate process, operating, and maintenance practices, operate with low emission performance for specific applications in the process unit or affected facility. The owner or operator shall continue to conduct performance trials as long as no superior performing design or technology has been identified, except as provided in paragraph (d)(6)(vi) of this section. The initial list of superior emission performance pump designs or pump seal technologies shall be amended in the future, as appropriate, as additional information and experience are obtained.

(v) Any plant site with fewer than 400 valves and owned by a corporation with fewer than 100 employees shall be exempt from trial evaluations of pump seals or pump designs. Plant sites exempt from the trial evaluations of pumps shall begin the pump seal or pump replacement program at the start of the fourth year of the quality improvement program.

(vi) An owner or operator who has conducted performance trials on all alternative superior emission performance technologies suitable for the required applications in the process unit or affected facility may stop conducting performance trials provided that a superior performing design or technology has been demonstrated or there are no technically feasible alternative superior technologies remaining. The owner or operator shall prepare an engineering evaluation documenting the physical, chemical, or engineering basis for the judgment that the superior emission performance technology is technically infeasible or demonstrating that it would not reduce emissions.

(7) *Quality assurance program.* Each owner or operator shall prepare and implement a pump quality assurance program that details purchasing specifications and maintenance procedures for all pumps and pump seals in the process unit or affected facility. The quality assurance program may establish any number of categories, or classes, of pumps as needed to distinguish among operating conditions and services associated with poorer than average emission performance as well as those associated with better than average emission performance. The quality assurance program shall be developed considering the findings of the data analysis required under paragraph (d)(5) of this section; and, if applicable, the findings of the trial evaluation required in paragraph (d)(6) of this section; and the operating conditions in the process unit or affected facility. The quality assurance program shall be updated each year as long as the process unit or affected facility has the greater of either 10 percent or more leaking pumps or has three leaking pumps.

(i) The quality assurance program shall meet the requirements specified in paragraphs (d)(7)(i)(A) through (d)(7)(i)(D) of this section.

(A) Establish minimum design standards for each category of pumps or pump seal technology. The design standards shall specify known critical parameters such as tolerance, manufacturer, materials of construction, previous usage, or other applicable identified critical parameters;

(B) Require that all equipment orders specify the design standard (or minimum tolerances) for the pump or the pump seal;

(C) Provide for an audit procedure for quality control of purchased equipment to ensure conformance with purchase specifications. The audit program may be conducted by the owner or operator of the plant site or process unit or affected facility, or by a designated representative; and

(D) Detail off-line pump maintenance and repair procedures. These procedures shall include provisions to ensure that rebuilt or refurbished pumps and pump seals will meet the design specifications for the pump category and will operate so that emissions are minimized.

(ii) The quality assurance program shall be established no later than the start of the third year of the quality improvement program for plant sites with 400 or more valves or 100 or more employees; and no later than the start of the fourth year of the quality improvement program for plant sites with less than 400 valves and less than 100 employees.

date specified in the referencing subpart.

(b) *Compliance standard.* (1) Owners or operators routing emissions from equipment leaks to a fuel gas system or process shall comply with the provisions of subpart SS of this part, except as provided in § 63.1002(b).

(2) Owners or operators of closed vent systems and control devices used to comply with the provisions of this subpart shall comply with the provisions of subpart SS of this part and (b)(2)(i) through (b)(2)(iii) of this section, except as provided in § 63.1002(b).

(i) Nonflare control devices shall be designed and operated to reduce emissions of regulated material vented to them with an efficiency of 95 percent or greater, or to an exit concentration of 20 parts per million by volume, whichever is less stringent. The 20 parts per million by volume standard is not applicable to the provisions of § 63.1016.

(ii) Enclosed combustion devices shall be designed and operated to reduce emissions of regulated material vented to them with an efficiency of 95 percent or greater, or to an exit concentration of 20 parts per million by volume, on a dry basis, corrected to 3 percent oxygen, whichever is less stringent, or to provide a minimum residence time of 0.50 seconds at a minimum temperature of 760° C (1400° F).

(iii) Flares used to comply with the provisions of this subpart shall comply with the requirements of subpart SS of this part.

§ 63.1035 Quality improvement program for pumps.

(a) *Criteria.* If, on a 6-month rolling average, at least the greater of either 10 percent of the pumps in a process unit or affected facility (or plant site) or three pumps in a process unit or affected facility (or plant site) leak, the owner or operator shall comply with the requirements specified in paragraphs (a)(1) and (a)(2) of this section.

(1) Pumps that are in food and medical service or in polymerizing monomer service shall comply with all requirements except for those specified in paragraph (d)(8) of this section.

(2) Pumps that are not in food and medical or polymerizing monomer service shall comply with all of the requirements of this section.

(b) *Exiting the QIP.* The owner or operator shall comply with the requirements of this section until the number of leaking pumps is less than the greater of either 10 percent of the pumps or three pumps, calculated as a 6-month rolling average, in the process unit or affected facility (or plant site). Once the performance level is achieved, the owner or operator shall comply with the requirements in § 63.1026.

(c) *Resumption of QIP.* If, in a subsequent monitoring period, the process unit or affected facility (or plant site) has greater than either 10 percent of the pumps leaking or three pumps leaking (calculated as a 6-month rolling average), the owner or operator shall resume the quality improvement program starting at performance trials.

(d) *QIP requirements.* The quality improvement program shall meet the requirements specified in paragraphs (d)(1) through (d)(8) of this section.

(1) The owner or operator shall comply with the requirements in § 63.1026.

(2) *Data collection.* The owner or operator shall collect the data specified in paragraphs (d)(2)(i) through (d)(2)(v) of this section and maintain records for each pump in each process unit or affected facility (or plant site) subject to the quality improvement program. The data may be collected and the records may be maintained on a process unit, affected facility, or plant site basis.

(i) Pump type (e.g., piston, horizontal or vertical centrifugal, gear, bellows); pump manufacturer; seal type and manufacturer; pump design (e.g., external shaft, flanged body); materials of construction; if applicable, barrier fluid or packing material; and year installed.

(ii) Service characteristics of the stream such as discharge pressure, temperature, flow rate, corrosivity, and annual operating hours.

(iii) The maximum instrument readings observed in each monitoring observation before repair, response factor for the stream if appropriate, instrument model number, and date of the observation.

(iv) If a leak is detected, the repair methods used and the instrument readings after repair.

(v) If the data will be analyzed as part of a larger analysis program involving data from other plants or other types of process units or affected facilities, a description of any maintenance or quality assurance programs used in the process unit or affected facility that are intended to improve emission performance.

(3) The owner or operator shall continue to collect data on the pumps as long as the process unit or affected facility (or plant site) remains in the quality improvement program.

(4) *Pump or pump seal inspection.* The owner or operator shall inspect all pumps or pump seals that exhibited frequent seal failures and were removed from the process unit or affected facility due to leaks. The inspection shall determine the probable cause of the pump seal failure or of the pump leak and shall include recommendations, as appropriate, for design changes or changes in specifications to reduce leak potential.

(5)(i) *Data analysis.* The owner or operator shall analyze the data collected to comply with the requirements of paragraph (d)(2) of this section to determine the services, operating or maintenance practices, and pump or pump seal designs or technologies that have poorer than average emission performance and those that have better than average emission performance. The analysis shall determine if specific trouble areas can be identified on the basis of service, operating conditions or maintenance practices, equipment design, or other process-specific factors.

(ii) The analysis shall also be used to determine if there are superior performing pump or pump seal technologies that are applicable to the service(s), operating conditions, or pump or pump seal designs associated with poorer than average emission performance. A superior performing pump or pump seal technology is one with a leak frequency of less than 10 percent for specific applications in the process unit, affected facility, or plant site. A candidate superior performing pump or pump seal technology is one demonstrated or reported in the available literature or through a group study as having low emission performance and as being capable of achieving less than 10 percent leaking pumps in the process unit or affected facility (or plant site).

(iii) The analysis shall include consideration of the information specified in paragraphs (d)(5)(iii)(A) through (d)(5)(iii)(C) of this section.

(A) The data obtained from the inspections of pumps and pump seals removed from the process unit or affected facility due to leaks;

(B) Information from the available literature and from the experience of other plant sites that will identify pump designs or technologies and operating conditions associated with low emission performance for specific services; and

(C) Information on limitations on the service conditions for the pump seal technology operating conditions as well as information on maintenance procedures to ensure continued low emission performance.

(iv) The data analysis may be conducted through an inter- or intra-company program (or through some combination of the two approaches) and may be for a single process unit, a plant

(2) Equipped with a barrier fluid system degassing reservoir that is routed to a process or fuel gas system or connected by a closed-vent system to a control device that meets the requirements of either § 63.1034 or § 63.1021(b); or

(3) Equipped with a closed-loop system that purges the barrier fluid directly into a process stream.

(c) *Barrier fluid system.* The barrier fluid shall not be in light liquid service. Each barrier fluid system shall be equipped with a sensor that will detect failure of the seal system, barrier fluid system, or both. Each sensor shall be observed daily or shall be equipped with an alarm unless the compressor is located within the boundary of an unmanned plant site.

(d) *Failure criterion and leak detection.* (1) The owner or operator shall determine, based on design considerations and operating experience, a criterion that indicates failure of the seal system, the barrier fluid system, or both. If the sensor indicates failure of the seal system, the barrier fluid system, or both based on the criterion, a leak is detected and shall be repaired pursuant to § 63.1024, as applicable.

(2) The owner or operator shall keep records of the design criteria and an explanation of the design criteria; and any changes to these criteria and the reasons for the changes.

(e) *Routed to a process or fuel gas system or equipped with a closed vent system.* A compressor is exempt from the requirements of paragraphs (b) through (d) of this section if it is equipped with a system to capture and transport leakage from the compressor drive shaft seal to a process or a fuel gas system or to a closed vent system that captures and transports leakage from the compressor to a control device meeting the requirements of either § 63.1034 or § 63.1021(b).

(f) *Alternative compressor standard.* (1) Any compressor that is designated, as described in § 63.1022(e), as operating with an instrument reading of less than 500 parts per million above background shall operate at all times with an instrument reading of less than 500 parts per million. A compressor so designated is exempt from the requirements of paragraphs (b) through (d) of this section if the compressor is demonstrated, initially upon designation, annually, and at other times requested by the Administrator to be operating with an instrument reading of less than 500 parts per million above background, as measured by the method specified in § 63.1023(b) and, as applicable, § 63.1023(c).

(2) The owner or operator shall record the dates and results of each compliance test including the background level measured and the maximum instrument reading measured during each compliance test.

§ 63.1032 Sampling connection systems standards.

(a) *Compliance schedule.* The owner or operator shall comply with this section no later than the compliance dates specified in the referencing subpart.

(b) *Equipment requirement.* Each sampling connection system shall be equipped with a closed-purge, closed-loop, or closed vent system, except as provided in §§ 63.1021(b), 63.1036, 63.1037, or paragraph (d) of this section. Gases displaced during filling of the sample container are not required to be collected or captured.

(c) *Equipment design and operation.* Each closed-purge, closed-loop, or closed vent system as required in paragraph (b) of this section shall meet the applicable requirements specified in paragraphs (c)(1) through (c)(5) of this section.

(1) The system shall return the purged process fluid directly to a process line or to a fuel gas system that meets the requirements of either § 63.1034 or § 63.1021(b); or

(2) [Reserved]

(3) Be designed and operated to capture and transport all the purged process fluid to a control device that meets the requirements of either § 63.1034 or § 63.1021(b); or

(4) Collect, store, and transport the purged process fluid to a system or facility identified in paragraph (c)(4)(i), (c)(4)(ii), or (c)(4)(iii) of this section.

(i) A waste management unit as defined in 40 CFR 63.111 or subpart G, if the waste management unit is subject to and operating in compliance with the provisions of 40 CFR part 63, subpart G, applicable to group 1 wastewater streams. If the purged process fluid does not contain any regulated material listed in Table 9 of 40 CFR part 63, subpart G, the waste management unit need not be subject to, and operated in compliance with the requirements of 40 CFR part 63, subpart G, applicable to group 1 wastewater steams provided the facility has a National Pollution Discharge Elimination System (NPDES) permit or sends the wastewater to an NPDES-permitted facility.

(ii) A treatment, storage, or disposal facility subject to regulation under 40 CFR parts 262, 264, 265, or 266; or

(iii) A facility permitted, licensed, or registered by a State to manage municipal or industrial solid waste, if the process fluids are not hazardous waste as defined in 40 CFR part 261.

(5) Containers that are part of a closed purge system must be covered or closed when not being filled or emptied.

(d) *In-situ sampling systems.* In-situ sampling systems and sampling systems without purges are exempt from the requirements of paragraphs (b) and (c) of this section.

§ 63.1033 Open-ended valves or lines standards.

(a) *Compliance schedule.* The owner or operator shall comply with this section no later than the compliance date specified in the referencing subpart.

(b) *Equipment and operational requirements.* (1) Each open-ended valve or line shall be equipped with a cap, blind flange, plug, or a second valve, except as provided in §§ 63.1021(b), 63.1036, 63.1037, and paragraphs (c) and (d) of this section. The cap, blind flange, plug, or second valve shall seal the open end at all times except during operations requiring process fluid flow through the open-ended valve or line, or during maintenance. The operational provisions of paragraphs (b)(2) and (b)(3) of this section also apply.

(2) Each open-ended valve or line equipped with a second valve shall be operated in a manner such that the valve on the process fluid end is closed before the second valve is closed.

(3) When a double block and bleed system is being used, the bleed valve or line may remain open during operations that require venting the line between the block valves but shall comply with paragraph (b)(1) of this section at all other times.

(c) *Emergency shutdown exemption.* Open-ended valves or lines in an emergency shutdown system that are designed to open automatically in the event of a process upset are exempt from the requirements of paragraph (b) of this section.

(d) *Polymerizing materials exemption.* Open-ended valves or lines containing materials that would autocatalytically polymerize or, would present an explosion, serious overpressure, or other safety hazard if capped or equipped with a double block and bleed system as specified in paragraph (b) of this section are exempt from the requirements of paragraph (b) of this section.

§ 63.1034 Closed vent systems and control devices; or emissions routed to a fuel gas system or process standards.

(a) *Compliance schedule.* The owner or operator shall comply with this section no later than the compliance

detected and shall be repaired pursuant to § 63.1024, as applicable.

(B) The owner or operator shall keep records of the design criteria and an explanation of the design criteria; and any changes to these criteria and the reasons for the changes.

(2) *No external shaft.* Any agitator that is designed with no externally actuated shaft penetrating the agitator housing is exempt from paragraph (c) of this section.

(3) *Routed to a process or fuel gas system or equipped with a closed vent system.* Any agitator that is routed to a process or fuel gas system that captures and transports leakage from the agitator to a control device meeting the requirements of either § 63.1034 or § 63.1021(b) is exempt from the requirements of paragraph (c) of this section.

(4) *Unmanned plant site.* Any agitator that is located within the boundary of an unmanned plant site is exempt from the weekly visual inspection requirement of paragraphs (c)(3) and (e)(1)(iv) of this section, and the daily requirements of paragraph (e)(1)(v) of this section, provided that each agitator is visually inspected as often as practical and at least monthly.

(5) *Difficult-to-monitor agitator seals.* Any agitator seal that is designated, as described in § 63.1022(c)(2), as a difficult-to-monitor agitator seal is exempt from the requirements of paragraph (c) of this section and the owner or operator shall monitor the agitator seal according to the written plan specified in § 63.1022(c)(4).

(6) *Equipment obstructions.* Any agitator seal that is obstructed by equipment or piping that prevents access to the agitator by a monitor probe is exempt from the monitoring requirements of paragraph (c) of this section.

(7) *Unsafe-to-monitor agitator seals.* Any agitator seal that is designated, as described in § 63.1022(c)(1), as an unsafe-to-monitor agitator seal is exempt from the requirements of paragraph (c) of this section and the owner or operator of the agitator seal monitors the agitator seal according to the written plan specified in § 63.1022(c)(4).

§ 63.1029 Pumps, valves, connectors, and agitators in heavy liquid service; pressure relief devices in liquid service; and instrumentation systems standards.

(a) *Compliance schedule.* The owner or operator shall comply with this section no later than the compliance dates specified in the referencing subpart.

(b) *Leak detection.* (1) *Monitoring method.* Unless otherwise specified in §§ 63.1021(b), 63.1036, or 63.1037, the owner or operator shall comply with paragraphs (b)(1) and (b)(2) of this section. Pumps, valves, connectors, and agitators in heavy liquid service; pressure relief devices in light liquid or heavy liquid service; and instrumentation systems shall be monitored within 5 calendar days by the method specified in § 63.1023(b) and, as applicable, § 63.1023(c), if evidence of a potential leak to the atmosphere is found by visual, audible, olfactory, or any other detection method, unless the potential leak is repaired as required in paragraph (c) of this section.

(2) *Instrument reading that defines a leak.* If an instrument reading of 10,000 parts per million or greater for agitators, 5,000 parts per million or greater for pumps handling polymerizing monomers, 2,000 parts per million or greater for pumps in food and medical service, or 2,000 parts per million or greater for all other pumps (including pumps in food/medical service), or 500 parts per million or greater for valves, connectors, instrumentation systems, and pressure relief devices is measured pursuant to paragraph (b)(1) of this section, a leak is detected and shall be repaired pursuant to § 63.1024, as applicable.

(c) *Leak repair.* For equipment identified in paragraph (b) of this section that is not monitored by the method specified in § 63.1023(b) and, as applicable, § 63.1023(c), repaired shall mean that the visual, audible, olfactory, or other indications of a leak to the atmosphere have been eliminated; that no bubbles are observed at potential leak sites during a leak check using soap solution; or that the system will hold a test pressure.

§ 63.1030 Pressure relief devices in gas and vapor service standards.

(a) *Compliance schedule.* The owner or operator shall comply with this section no later than the compliance dates specified in the referencing subpart.

(b) *Compliance standard.* Except during pressure releases as provided for in paragraph (c) of this section, or as otherwise specified in §§ 63.1036, 63.1037, or paragraphs (d) and (e) of this section, each pressure relief device in gas and vapor service shall be operated with an instrument reading of less than 500 parts per million as measured by the method specified in § 63.1023(b) and, as applicable, § 63.1023(c).

(c) *Pressure relief requirements.* (1) After each pressure release, the pressure relief device shall be returned to a condition indicated by an instrument reading of less than 500 parts per million, as soon as practical, but no later than 5 calendar days after each pressure release, except as provided in § 63.1024(d).

(2) The pressure relief device shall be monitored no later than five calendar days after the pressure to confirm the condition indicated by an instrument reading of less than 500 parts per million above background, as measured by the method specified in § 63.1023(b) and, as applicable, § 63.1023(c).

(3) The owner or operator shall record the dates and results of the monitoring required by paragraph (c)(2) of this section following a pressure release including the background level measured and the maximum instrument reading measured during the monitoring.

(d) *Pressure relief devices routed to a process or fuel gas system or equipped with a closed vent system and control device.* Any pressure relief device that is routed to a process or fuel gas system or equipped with a closed vent system capable of capturing and transporting leakage from the pressure relief device to a control device meeting the requirements of § 63.1034 is exempt from the requirements of paragraphs (b) and (c) of this section.

(e) *Rupture disk exemption.* Any pressure relief device that is equipped with a rupture disk upstream of the pressure relief device is exempt from the requirements of paragraphs (b) and (c) of this section provided the owner or operator installs a replacement rupture disk upstream of the pressure relief device as soon as practical after each pressure release but no later than 5 calendar days after each pressure release, except as provided in § 63.1024(d).

§ 63.1031 Compressors standards.

(a) *Compliance schedule.* The owner or operator shall comply with this section no later than the compliance dates specified in the referencing subpart.

(b) *Seal system standard.* Each compressor shall be equipped with a seal system that includes a barrier fluid system and that prevents leakage of process fluid to the atmosphere, except as provided in §§ 63.1021(b), 63.1036, 63.1037, and paragraphs (e) and (f) of this section. Each compressor seal system shall meet the applicable requirements specified in paragraph (b)(1), (b)(2), or (b)(3) of this section.

(1) Operated with the barrier fluid at a pressure that is greater than the compressor stuffing box pressure at all times (except during periods of startup, shutdown, or malfunction); or

$$\%C_L = C_L/C_t \times 100 \quad \text{[Eq. 4]}$$

Where:

$\%C_L$ = Percent leaking connectors as determined through periodic monitoring required in paragraphs (a) and (b)(3)(i) through (b)(3)(iii) of this section.

C_L = Number of connectors measured at 500 parts per million or greater, by the method specified in § 63.1023(b).

C_t = Total number of monitored connectors in the process unit or affected facility.

(d) *Leak repair.* If a leak is detected pursuant to paragraphs (a) and (b) of this section, then the leak shall be repaired using the procedures in § 63.1024, as applicable.

(e) *Special provisions for connectors.* (1) *Unsafe-to-monitor connectors.* Any connector that is designated, as described in § 63.1022(c)(1), as an unsafe-to-monitor connector is exempt from the requirements of paragraphs (a) and (b) of this section and the owner or operator shall monitor according to the written plan specified in § 63.1022(c)(4).

(2) *Inaccessible, ceramic, or ceramic-lined connectors.* (i) Any connector that is inaccessible or that is ceramic or ceramic-lined (e.g., porcelain, glass, or glass-lined), is exempt from the monitoring requirements of paragraphs (a) and (b) of this section, from the leak repair requirements of paragraph (d) of this section, and from the recordkeeping and reporting requirements of §§ 63.1038 and 63.1039. An inaccessible connector is one that meets any of the provisions specified in paragraphs (e)(2)(i)(A) through (e)(2)(i)(F) of this section, as applicable.

(A) Buried;

(B) Insulated in a manner that prevents access to the connector by a monitor probe;

(C) Obstructed by equipment or piping that prevents access to the connector by a monitor probe;

(D) Unable to be reached from a wheeled scissor-lift or hydraulic-type scaffold that would allow access to connectors up to 7.6 meters (25 feet) above the ground.

(E) Inaccessible because it would require elevating the monitoring personnel more than 2 meters (7 feet) above a permanent support surface or would require the erection of scaffold;

(F) Not able to be accessed at any time in a safe manner to perform monitoring. Unsafe access includes, but is not limited to, the use of a wheeled scissor-lift on unstable or uneven terrain, the use of a motorized man-lift basket in areas where an ignition potential exists, or access would require near proximity to hazards such as electrical lines, or would risk damage to equipment.

(ii) If any inaccessible, ceramic or ceramic-lined connector is observed by visual, audible, olfactory, or other means to be leaking, the visual, audible, olfactory, or other indications of a leak to the atmosphere shall be eliminated as soon as practical.

§ 63.1028 Agitators in gas and vapor service and in light liquid service standards.

(a) *Compliance schedule.* The owner or operator shall comply with this section no later than the compliance dates specified in the referencing subpart.

(b) [Reserved]

(c) *Leak detection.* (1) *Monitoring method.* Each agitator seal shall be monitored monthly to detect leaks by the methods specified in § 63.1023(b) and, as applicable, § 63.1023(c), except as provided in § 63.1021(b), § 63.1036, § 63.1037, or paragraph (e) of this section.

(2) *Instrument reading that defines a leak.* If an instrument reading equivalent of 10,000 parts per million or greater is measured, a leak is detected.

(3) *Visual inspection.* (i) Each agitator seal shall be checked by visual inspection each calendar week for indications of liquids dripping from the agitator seal. The owner or operator shall document that the inspection was conducted and the date of the inspection.

(ii) If there are indications of liquids dripping from the agitator seal, the owner or operator shall follow the procedures specified in paragraphs (c)(3)(ii)(A) or (c)(3)(ii)(B) of this section prior to the next required inspection.

(A) The owner or operator shall monitor the agitator seal as specified in § 63.1023(b) and, as applicable, § 63.1023(c), to determine if there is a leak of regulated material. If an instrument reading of 10,000 parts per million or greater is measured, a leak is detected, and it shall be repaired according to paragraph (d) of this section; or

(B) The owner or operator shall eliminate the indications of liquids dripping from the agitator seal.

(d) *Leak repair.* If a leak is detected, then the leak shall be repaired using the procedures in § 63.1024.

(e) *Special provisions for agitators.* (1) *Dual mechanical seal.* Each agitator equipped with a dual mechanical seal system that includes a barrier fluid system is exempt from the requirements of paragraph (c) of this section, provided the requirements specified in paragraphs (e)(1)(i) through (e)(1)(vi) of this section are met.

(i) Each dual mechanical seal system shall meet the applicable requirements specified in paragraphs (e)(1)(i)(A), (e)(1)(i)(B), or (e)(1)(i)(C) of this section.

(A) Operated with the barrier fluid at a pressure that is at all times (except during periods of startup, shutdown, or malfunction) greater than the agitator stuffing box pressure; or

(B) Equipped with a barrier fluid degassing reservoir that is routed to a process or fuel gas system or connected by a closed-vent system to a control device that meets the requirements of either § 63.1034 or § 63.1021(b); or

(C) Equipped with a closed-loop system that purges the barrier fluid into a process stream.

(ii) The barrier fluid is not in light liquid service.

(iii) Each barrier fluid system is equipped with a sensor that will detect failure of the seal system, the barrier fluid system, or both.

(iv) Each agitator seal is checked by visual inspection each calendar week for indications of liquids dripping from the agitator seal. If there are indications of liquids dripping from the agitator seal at the time of the weekly inspection, the owner or operator shall follow the procedure specified in paragraphs (e)(1)(iv)(A) or (e)(1)(iv)(B) of this section prior to the next required inspection.

(A) The owner or operator shall monitor the agitator seal as specified in § 63.1023(b) and, as applicable, § 63.1023(c), to determine the presence of regulated material in the barrier fluid. If an instrument reading equivalent to or greater than 10,000 ppm is measured, a leak is detected and it shall be repaired using the procedures in § 63.1024, or

(B) The owner or operator shall eliminate the visual indications of liquids dripping.

(v) Each sensor as described in paragraph (e)(1)(iii) of this section is observed daily or is equipped with an alarm unless the agitator seal is located within the boundary of an unmanned plant site.

(vi) The owner or operator of each dual mechanical seal system shall meet the requirements specified in paragraphs (e)(1)(vi)(A) and (e)(1)(vi)(B).

(A) The owner or operator shall determine, based on design considerations and operating experience, criteria that indicates failure of the seal system, the barrier fluid system, or both and applicable to the presence and frequency of drips. If indications of liquids dripping from the agitator seal exceed the criteria, or if, based on the criteria the sensor indicates failure of the seal system, the barrier fluid system, or both, a leak is

owner or operator shall follow the procedure specified in paragraphs (e)(1)(v)(A) or (e)(1)(v)(B) of this section prior to the next required inspection.

(A) The owner or operator shall monitor the pump as specified in § 63.1023(b) and, as applicable, § 63.1023 (c), to determine if there is a leak of regulated material in the barrier fluid. If an instrument reading of 1,000 parts per million or greater is measured, a leak is detected and it shall be repaired using the procedures in § 63.1024; or

(B) The owner or operator shall eliminate the visual indications of liquids dripping.

(vi) If indications of liquids dripping from the pump seal exceed the criteria established in paragraph (e)(1)(i) of this section, or if based on the criteria established in paragraph (e)(1)(i) of this section the sensor indicates failure of the seal system, the barrier fluid system, or both, a leak is detected.

(vii) Each sensor as described in paragraph (e)(1)(iv) of this section is observed daily or is equipped with an alarm unless the pump is located within the boundary of an unmanned plant site.

(viii) When a leak is detected pursuant to paragraph (e)(1)(vi) of this section, it shall be repaired as specified in § 63.1024.

(2) *No external shaft.* Any pump that is designed with no externally actuated shaft penetrating the pump housing is exempt from the requirements of paragraph (b) of this section.

(3) *Routed to a process or fuel gas system or equipped with a closed vent system.* Any pump that is routed to a process or fuel gas system or equipped with a closed vent system capable of capturing and transporting leakage from the pump to a control device meeting the requirements of § 63.1034 of this part or § 63.1021(b) is exempt from the requirements of paragraph (b) of this section.

(4) *Unmanned plant site.* Any pump that is located within the boundary of an unmanned plant site is exempt from the weekly visual inspection requirement of paragraphs (b)(4) and (e)(1)(v) of this section, and the daily requirements of paragraph (e)(1)(vii) of this section, provided that each pump is visually inspected as often as practical and at least monthly.

(5) *90 percent exemption.* If more than 90 percent of the pumps at a process unit or affected facility meet the criteria in either paragraph (e)(1) or (e)(2) of this section, the process unit or affected facility is exempt from the percent leaking calculation in paragraph (c) of this section.

(6) *Unsafe-to-monitor pumps.* Any pump that is designated, as described in § 63.1022(c)(1)(ii), as an unsafe-to-monitor pump is exempt from the requirements of paragraph (b) of this section and the requirements of § 63.1024 and the owner or operator shall monitor the pump according to the written plan specified in § 63.1022(c)(4)

§ 63.1027 Connectors in gas and vapor service and in light liquid service standards.

(a) *Compliance schedule.* The owner or operator shall monitor all connectors in each process unit initially for leaks by the later of either 12 months after the compliance date as specified in a referencing subpart or 12 months after initial startup. If all connectors in each process unit have been monitored for leaks prior to the compliance date specified in the referencing subpart, no initial monitoring is required provided either no process changes have been made since the monitoring or the owner or operator can determine that the results of the monitoring, with or without adjustments, reliably demonstrate compliance despite process changes. If required to monitor because of a process change, the owner or operator is required to monitor only those connectors involved in the process change.

(b) *Leak detection.* Except as allowed in § 63.1021(b), § 63.1036, § 63.1037, or as specified in paragraph (e) of this section, the owner or operator shall monitor all connectors in gas and vapor and light liquid service as specified in paragraphs (a) and (b)(3) of this section.

(1) *Monitoring method.* The connectors shall be monitored to detect leaks by the method specified in § 63.1023(b) and, as applicable, § 63.1023(c).

(2) *Instrument reading that defines a leak.* If an instrument reading greater than or equal to 500 parts per million is measured, a leak is detected.

(3) *Monitoring periods.* The owner or operator shall perform monitoring, subsequent to the initial monitoring required in paragraph (a) of this section, as specified in paragraphs (b)(3)(i) through (b)(3)(iii) of this section, and shall comply with the requirements of paragraphs (b)(3)(iv) and (b)(3)(v) of this section. The required period in which monitoring must be conducted shall be determined from paragraphs (b)(3)(i) through (b)(3)(iii) of this section using the monitoring results from the preceding monitoring period. The percent leaking connectors shall be calculated as specified in paragraph (c) of this section.

(i) If the percent leaking connectors in the process unit was greater than or equal to 0.5 percent, then monitor within 12 months (1 year).

(ii) If the percent leaking connectors in the process unit was greater than or equal to 0.25 percent but less than 0.5 percent, then monitor within 4 years. An owner or operator may comply with the requirements of this paragraph by monitoring at least 40 percent of the connectors within 2 years of the start of the monitoring period, provided all connectors have been monitored by the end of the 4 year monitoring period.

(iii) If the percent leaking connectors in the process unit was less than 0.25 percent, then monitor as provided in paragraph (b)(3)(iii)(A) of this section and either paragraph (b)(3)(iii)(B) or (b)(3)(iii)(C) of this section, as appropriate.

(A) An owner or operator shall monitor at least 50 percent of the connectors within 4 years of the start of the monitoring period.

(B) If the percent leaking connectors calculated from the monitoring results in paragraph (b)(3)(iii)(A) of this section is greater than or equal to 0.35 percent of the monitored connectors, the owner or operator shall monitor as soon as practical, but within the next 6 months, all connectors that have not yet been monitored during the monitoring period. At the conclusion of monitoring, a new monitoring period shall be started pursuant to paragraph (b)(3) of this section, based on the percent leaking connectors of the total monitored connectors.

(C) If the percent leaking connectors calculated from the monitoring results in paragraph (b)(3)(iii)(A) of this section is less than 0.35 percent of the monitored connectors, the owner or operator shall monitor all connectors that have not yet been monitored within 8 years of the start of the monitoring period.

(iv) If, during the monitoring conducted pursuant to paragraph (b)(3)(i) through (b)(3)(iii) of this section, a connector is found to be leaking, it shall be re-monitored once within 90 days after repair to confirm that it is not leaking.

(v) The owner or operator shall keep a record of the start date and end date of each monitoring period under this section for each process unit.

(c) *Percent leaking connectors calculation.* For use in determining the monitoring frequency, as specified in paragraphs (a) and (b)(3) of this section, the percent leaking connectors as used in paragraphs (a) and (b)(3) of this section shall be calculated by using equation number 4.

of paragraph (b) of this section and the owner or operator shall monitor the valve according to the written plan specified in § 63.1022(c)(4).

(3) *Fewer than 250 valves.* Any equipment located at a plant site with fewer than 250 valves in regulated material service is exempt from the requirements for monthly monitoring specified in paragraph (b)(3)(i) of this section. Instead, the owner or operator shall monitor each valve in regulated material service for leaks once each quarter, as provided in paragraphs (e)(1) and (e)(2) of this section.

§ 63.1026 Pumps in light liquid service standards.

(a) *Compliance schedule.* The owner or operator shall comply with this section no later than the compliance dates specified in the referencing subpart.

(b) *Leak detection.* Unless otherwise specified in § 63.1021(b), § 63.1036, § 63.1037, or paragraph (e) of this section, the owner or operator shall monitor each pump to detect leaks and shall comply with all other provisions of this section.

(1) *Monitoring method and frequency.* The pumps shall be monitored monthly to detect leaks by the method specified in § 63.1023(b) and, as applicable, § 63.1023(c).

(2) *Instrument reading that defines a leak.* The instrument reading that defines a leak is specified in paragraphs (b)(2)(i) through (b)(2)(iii) of this section.

(i) 5,000 parts per million or greater for pumps handling polymerizing monomers;

(ii) 2,000 parts per million or greater for pumps in food/medical service; and

(iii) 1,000 parts per million or greater for all other pumps.

(3) *Leak repair exception.* For pumps to which a 1,000 parts per million leak definition applies, repair is not required unless an instrument reading of 2,000 parts per million or greater is detected.

(4) *Visual inspection.* Each pump shall be checked by visual inspection each calendar week for indications of liquids dripping from the pump seal. The owner or operator shall document that the inspection was conducted and the date of the inspection. If there are indications of liquids dripping from the pump seal at the time of the weekly inspection, the owner or operator shall follow the procedure specified in either paragraph (b)(4)(i) or (b)(4)(ii) of this section.

(i) The owner or operator shall monitor the pump as specified in § 63.1023(b) and, as applicable, § 63.1023(c). If the instrument reading indicates a leak as specified in paragraph (b)(2) of this section, a leak is detected and it shall be repaired using the procedures in § 63.1024, except as specified in paragraph (b)(3) of this section; or

(ii) The owner or operator shall eliminate the visual indications of liquids dripping.

(c) *Percent leaking pumps calculation.* *(1) The owner or operator shall decide no later than the compliance date of this part or upon revision of an operating permit whether to calculate percent leaking pumps on a process unit basis or group of process units basis. Once the owner or operator has decided, all subsequent percentage calculations shall be made on the same basis.*

(2) If, when calculated on a 6-month rolling average, at least the greater of either 10 percent of the pumps in a process unit or three pumps in a process unit leak, the owner or operator shall implement a quality improvement program for pumps that complies with the requirements of § 63.1035.

(3) The number of pumps at a process unit or affected facility shall be the sum of all the pumps in regulated material service, except that pumps found leaking in a continuous process unit or affected facility within 1 month after start-up of the pump shall not count in the percent leaking pumps calculation for that one monitoring period only.

(4) Percent leaking pumps shall be determined by the following equation:

$$\%P_L = \left((P_L - P_S)/(P_T - P_S)\right) \times 100 \qquad \text{[Eq. 3]}$$

Where:

$\%P_L$ = Percent leaking pumps

P_L = Number of pumps found leaking as determined through monthly monitoring as required in paragraph (b)(1) of this section. Do not include results from inspection of unsafe-to-monitor pumps pursuant to paragraph (e)(6) of this section.

P_S = Number of pumps leaking within 1 month of start-up during the current monitoring period.

P_T = Total pumps in regulated material service, including those meeting the criteria in paragraphs (e)(1), (e)(2), (e)(3), and (e)(6) of this section.

(d) *Leak repair.* If a leak is detected pursuant to paragraph (b) of this section, then the leak shall be repaired using the procedures in § 63.1024, as applicable, unless otherwise specified in paragraph (b)(5) of this section for leaks identified by visual indications of liquids dripping.

(e) *Special provisions for pumps.* *(1) Dual mechanical seal pumps.* Each pump equipped with a dual mechanical seal system that includes a barrier fluid system is exempt from the requirements of paragraph (b) of this section, provided the requirements specified in paragraphs (e)(1)(i) through (e)(1)(viii) of this section are met.

(i) The owner or operator determines, based on design considerations and operating experience, criteria applicable to the presence and frequency of drips and to the sensor that indicates failure of the seal system, the barrier fluid system, or both. The owner or operator shall keep records at the plant of the design criteria and an explanation of the design criteria; and any changes to these criteria and the reasons for the changes. This record must be available for review by an inspector.

(ii) Each dual mechanical seal system shall meet the requirements specified in paragraph (e)(1)(ii)(A), (e)(1)(ii)(B), or (e)(1)(ii)(C) of this section.

(A) Each dual mechanical seal system is operated with the barrier fluid at a pressure that is at all times (except periods of startup, shutdown, or malfunction) greater than the pump stuffing box pressure; or

(B) Equipped with a barrier fluid degassing reservoir that is routed to a process or fuel gas system or connected by a closed-vent system to a control device that complies with the requirements of either § 63.1034 or § 63.1021(b) of this part; or

(C) Equipped with a closed-loop system that purges the barrier fluid into a process stream.

(iii) The barrier fluid is not in light liquid service.

(iv) Each barrier fluid system is equipped with a sensor that will detect failure of the seal system, the barrier fluid system, or both.

(v) Each pump is checked by visual inspection each calendar week for indications of liquids dripping from the pump seal. The owner or operator shall document that the inspection was conducted and the date of the inspection. If there are indications of liquids dripping from the pump seal at the time of the weekly inspection, the

$$\%V_{LO} = \frac{\sum_{i=1}^{n}\left(\%V_{Li} \times V_i\right)}{\sum_{i=1}^{n} V_i} \qquad \text{[Eq. 1]}$$

where:

$\%V_{LO}$ = Overall performance of total valves in the applicable process unit or group of process units

$\%V_{Li}$ = Percent leaking valves in subgroup i, most recent value calculated according to the procedures in paragraphs (c)(1)(ii) and (c)(2) of this section.

V_i = Number of valves in subgroup i.

n = Number of subgroups.

(iv) The owner or operator shall maintain records specified in paragraphs (b)(4)(iv)(A) through (b)(4)(iv)(D) of this section.

(A) Which valves are assigned to each subgroup.

(B) Monitoring results and calculations made for each subgroup for each monitoring period.

(C) Which valves are reassigned, the last monitoring result prior to reassignment, and when they were reassigned, and

(D) The results of the semiannual overall performance calculation required in paragraph (b)(4)(iii) of this section.

(v) The owner or operator shall notify the Administrator no later than 30 days prior to the beginning of the next monitoring period of the decision to subgroup valves. The notification shall identify the participating process units and the number of valves assigned to each subgroup, if applicable, and may be included in the next Periodic Report.

(vi) The owner or operator shall submit in the periodic reports the information specified in paragraphs (b)(4)(vi)(A) and (b)(4)(vi)(B).

(A) Total number of valves in each subgroup, and

(B) Results of the semiannual overall performance calculation required by paragraph (b)(4)(iii) of this section.

(vii) To determine the monitoring frequency for each subgroup, the calculation procedures of paragraph (c)(2) of this section shall be used.

(viii) Except for the overall performance calculations required by paragraphs (b)(4)(i) and (iii) of this section, each subgroup shall be treated as if it were a process unit for the purposes of applying the provisions of this section.

(c) *Percent leaking valves calculation.* (1) *Calculation basis and procedures.* (i) The owner or operator shall decide no later than the compliance date of this part or upon revision of an operating permit whether to calculate percent leaking valves on a process unit or group of process units basis. Once the owner or operator has decided, all subsequent percentage calculations shall be made on the same basis and this shall be the basis used for comparison with the subgrouping criteria specified in paragraph (b)(4)(i) of this section.

(ii) The percent leaking valves for each monitoring period for each process unit or valve subgroup, as provided in paragraph (b)(4) of this section, shall be calculated using the following equation:

$$\%V_L = \left(V_L / V_T\right) \times 100 \qquad \text{[Eq. 2]}$$

where:

$\%V_L$ = Percent leaking valves.

V_L = Number of valves found leaking, excluding nonrepairable valves, as provided in paragraph (c)(3) of this section, and including those valves found leaking pursuant to paragraphs (d)(2)(iii)(A) and (d)(2)(iii)(B) of this section.

V_T = The sum of the total number of valves monitored.

(2) *Calculation for monitoring frequency.* When determining monitoring frequency for each process unit or valve subgroup subject to monthly, quarterly, or semiannual monitoring frequencies, the percent leaking valves shall be the arithmetic average of the percent leaking valves from the last two monitoring periods. When determining monitoring frequency for each process unit or valve subgroup subject to annual or biennial (once every 2 years) monitoring frequencies, the percent leaking valves shall be the arithmetic average of the percent leaking valves from the last three monitoring periods.

(3) *Nonrepairable valves.* (i) Nonrepairable valves shall be included in the calculation of percent leaking valves the first time the valve is identified as leaking and nonrepairable and as required to comply with paragraph (c)(3)(ii) of this section. Otherwise, a number of nonrepairable valves (identified and included in the percent leaking valves calculation in a previous period) up to a maximum of 1 percent of the total number of valves in regulated material service at a process unit or affected facility may be excluded from calculation of percent leaking valves for subsequent monitoring periods.

(ii) If the number of nonrepairable valves exceeds 1 percent of the total number of valves in regulated material service at a process unit or affected facility, the number of nonrepairable valves exceeding 1 percent of the total number of valves in regulated material service shall be included in the calculation of percent leaking valves.

(d) *Leak repair.* (1) If a leak is determined pursuant to paragraph (b), (e)(1), or (e)(2) of this section, then the leak shall be repaired using the procedures in § 63.1024, as applicable.

(2) After a leak has been repaired, the valve shall be monitored at least once within the first 3 months after its repair. The monitoring required by this paragraph is in addition to the monitoring required to satisfy the definition of repaired and first attempt at repair.

(i) The monitoring shall be conducted as specified in § 63.1023(b) and (c) of this section, as appropriate, to determine whether the valve has resumed leaking.

(ii) Periodic monitoring required by paragraph (b) of this section may be used to satisfy the requirements of this paragraph, if the timing of the monitoring period coincides with the time specified in this paragraph. Alternatively, other monitoring may be performed to satisfy the requirements of this paragraph, regardless of whether the timing of the monitoring period for periodic monitoring coincides with the time specified in this paragraph.

(iii) If a leak is detected by monitoring that is conducted pursuant to paragraph (d)(2) of this section, the owner or operator shall follow the provisions of paragraphs (d)(2)(iii)(A) and (d)(2)(iii)(B) of this section, to determine whether that valve must be counted as a leaking valve for purposes of paragraph (c)(1)(ii) of this section.

(A) If the owner or operator elected to use periodic monitoring required by paragraph (b) of this section to satisfy the requirements of paragraph (d)(2) of this section, then the valve shall be counted as a leaking valve.

(B) If the owner or operator elected to use other monitoring, prior to the periodic monitoring required by paragraph (b) of this section, to satisfy the requirements of paragraph (d)(2) of this section, then the valve shall be counted as a leaking valve unless it is repaired and shown by periodic monitoring not to be leaking.

(e) *Special provisions for valves.* (1) *Unsafe-to-monitor valves.* Any valve that is designated, as described in § 63.1022(c)(1), as an unsafe-to-monitor valve is exempt from the requirements of paragraphs (b) and (d)(2) of this section and the owner or operator shall monitor the valve according to the written plan specified in § 63.1022(c)(4).

(2) *Difficult-to-monitor valves.* Any valve that is designated, as described in § 63.1022(c)(2), as a difficult-to-monitor valve is exempt from the requirements

maintained pursuant to the referencing subpart.

(1) The date of first attempt to repair the leak.

(2) The date of successful repair of the leak.

(3) Maximum instrument reading measured by Method 21 of 40 CFR part 60, appendix A at the time the leak is successfully repaired or determined to be nonrepairable.

(4) "Repair delayed" and the reason for the delay if a leak is not repaired within 15 calendar days after discovery of the leak as specified in paragraphs (f)(4)(i) and (f)(4)(ii) of this section.

(i) The owner or operator may develop a written procedure that identifies the conditions that justify a delay of repair. The written procedures may be included as part of the startup, shutdown, and malfunction plan, as required by the referencing subpart for the source, or may be part of a separate document that is maintained at the plant site. In such cases, reasons for delay of repair may be documented by citing the relevant sections of the written procedure.

(ii) If delay of repair was caused by depletion of stocked parts, there must be documentation that the spare parts were sufficiently stocked on-site before depletion and the reason for depletion.

(5) Dates of process unit or affected facility shutdowns that occur while the equipment is unrepaired.

§ 63.1025 Valves in gas and vapor service and in light liquid service standards.

(a) *Compliance schedule.* (1) The owner or operator shall comply with this section no later than the compliance dates specified in the referencing subpart.

(2) The use of monitoring data generated before the regulated source became subject to the referencing subpart to qualify initially for less frequent monitoring is governed by the provisions of § 63.1023(b)(6).

(b) *Leak detection.* Unless otherwise specified in § 63.1021(b) or paragraph (e) of this section, or the referencing subpart, the owner or operator shall monitor all valves at the intervals specified in paragraphs (b)(3) and/or (b)(4) of this section and shall comply with all other provisions of this section.

(1) *Monitoring method.* The valves shall be monitored to detect leaks by the method specified in § 63.1023(b) and, as applicable, § 63.1023(c).

(2) *Instrument reading that defines a leak.* The instrument reading that defines a leak is 500 parts per million or greater.

(3) *Monitoring frequency.* The owner or operator shall monitor valves for leaks at the intervals specified in paragraphs (b)(3)(i) through (b)(3)(v) of this section and shall keep the record specified in paragraph (b)(3)(vi) of this section.

(i) If at least the greater of 2 valves or 2 percent of the valves in a process unit leak, as calculated according to paragraph (c) of this section, the owner or operator shall monitor each valve once per month.

(ii) At process units with less than the greater of 2 leaking valves or 2 percent leaking valves, the owner or operator shall monitor each valve once each quarter, except as provided in paragraphs (b)(3)(iii) through (b)(3)(v) of this section. Monitoring data generated before the regulated source became subject to the referencing subpart and meeting the criteria of either § 63.1023(b)(1) through (b)(5), or § 63.1023(b)(6), may be used to qualify initially for less frequent monitoring under paragraphs (b)(3)(iii) through (b)(3)(v) of this section.

(iii) At process units with less than 1 percent leaking valves, the owner or operator may elect to monitor each valve once every two quarters

(iv) At process units with less than 0.5 percent leaking valves, the owner or operator may elect to monitor each valve once every four quarters.

(v) At process units with less than 0.25 percent leaking valves, the owner or operator may elect to monitor each valve once every 2 years.

(vi) The owner or operator shall keep a record of the monitoring schedule for each process unit.

(4) *Valve subgrouping.* For a process unit or a group of process units to which this subpart applies, an owner or operator may choose to subdivide the valves in the applicable process unit or group of process units and apply the provisions of paragraph (b)(3) of this section to each subgroup. If the owner or operator elects to subdivide the valves in the applicable process unit or group of process units, then the provisions of paragraphs (b)(4)(i) through (b)(4)(viii) of this section apply.

(i) The overall performance of total valves in the applicable process unit or group of process units to be subdivided shall be less than 2 percent leaking valves, as detected according to paragraphs (b)(1) and (b)(2) of this section and as calculated according to paragraphs (c)(1)(ii) and (c)(2) of this section.

(ii) The initial assignment or subsequent reassignment of valves to subgroups shall be governed by the provisions of paragraphs (b)(4)(ii)(A) through (b)(4)(ii)(C) of this section.

(A) The owner or operator shall determine which valves are assigned to each subgroup. Valves with less than one year of monitoring data or valves not monitored within the last twelve months must be placed initially into the most frequently monitored subgroup until at least one year of monitoring data have been obtained.

(B) Any valve or group of valves can be reassigned from a less frequently monitored subgroup to a more frequently monitored subgroup provided that the valves to be reassigned were monitored during the most recent monitoring period for the less frequently monitored subgroup. The monitoring results must be included with that less frequently monitored subgroup's associated percent leaking valves calculation for that monitoring event.

(C) Any valve or group of valves can be reassigned from a more frequently monitored subgroup to a less frequently monitored subgroup provided that the valves to be reassigned have not leaked for the period of the less frequently monitored subgroup (e.g., for the last 12 months, if the valve or group of valves is to be reassigned to a subgroup being monitored annually). Nonrepairable valves may not be reassigned to a less frequently monitored subgroup.

(iii) The owner or operator shall determine every 6 months if the overall performance of total valves in the applicable process unit or group of process units is less than 2 percent leaking valves and so indicate the performance in the next Periodic Report. If the overall performance of total valves in the applicable process unit or group of process units is 2 percent leaking valves or greater, the owner or operator shall no longer subgroup and shall revert to the program required in paragraphs (b)(1) through (b)(3) of this section for that applicable process unit or group of process units. An owner or operator can again elect to comply with the valve subgrouping procedures of paragraph (b)(4) of this section if future overall performance of total valves in the process unit or group of process units is again less than 2 percent. The overall performance of total valves in the applicable process unit or group of process units shall be calculated as a weighted average of the percent leaking valves of each subgroup according to Equation number 1:

instrument is not considered a minor departure.

(c) *Instrument monitoring using background adjustments.* The owner or operator may elect to adjust or not to adjust the instrument readings for background. If an owner or operator elects not to adjust instrument readings for background, the owner or operator shall monitor the equipment according to the procedures specified in paragraphs (b)(1) through (b)(5) of this section. In such cases, all instrument readings shall be compared directly to the applicable leak definition for the monitored equipment to determine whether there is a leak or to determine compliance with § 63.1030(b) (pressure relief devices) or § 63.1031(f) (alternative compressor standard). If an owner or operator elects to adjust instrument readings for background, the owner or operator shall monitor the equipment according to the procedures specified in paragraphs (c)(1) through (c)(4) of this section.

(1) The requirements of paragraphs (b)(1) through (b)(5) of this section shall apply.

(2) The background level shall be determined, using the procedures in Method 21 of 40 CFR part 60, appendix A.

(3) The instrument probe shall be traversed around all potential leak interfaces as close to the interface as possible as described in Method 21 of 40 CFR part 60, appendix A.

(4) The arithmetic difference between the maximum concentration indicated by the instrument and the background level shall be compared to the applicable leak definition for the monitored equipment to determine whether there is a leak or to determine compliance with § 63.1030(b) (pressure relief devices) or § 63.1031(f) (alternative compressor standard).

(d) *Sensory monitoring methods.* Sensory monitoring consists of visual, audible, olfactory, or any other detection method used to determine a potential leak to the atmosphere.

(e) *Leaking equipment identification and records.* (1) When each leak is detected pursuant to the monitoring specified in paragraph (a) of this section, a weatherproof and readily visible identification, shall be attached to the leaking equipment.

(2) When each leak is detected, the information specified in § 63.1024(f) shall be recorded and kept pursuant to the referencing subpart, except for the information for connectors complying with the 8 year monitoring period allowed under § 63.1027(b)(3)(iii) shall be kept 5 years beyond the date of its last use.

§ 63.1024 Leak repair.

(a) *Leak repair schedule.* The owner or operator shall repair each leak detected as soon as practical, but not later than 15 calendar days after it is detected, except as provided in paragraphs (d) and (e) of this section. A first attempt at repair as defined in this subpart shall be made no later than 5 calendar days after the leak is detected. First attempt at repair for pumps includes, but is not limited to, tightening the packing gland nuts and/or ensuring that the seal flush is operating at design pressure and temperature. First attempt at repair for valves includes, but is not limited to, tightening the bonnet bolts, and/or replacing the bonnet bolts, and/or tightening the packing gland nuts, and/or injecting lubricant into the lubricated packing.

(b) [Reserved]

(c) *Leak identification removal.* (1) *Valves and connectors in gas/vapor and light liquid service.* The leak identification on a valve in gas/vapor or light liquid service may be removed after it has been monitored as specified in § 63.1025(d)(2), and no leak has been detected during that monitoring. The leak identification on a connector in gas/vapor or light liquid service may be removed after it has been monitored as specified in § 63.1027(b)(3)(iv) and no leak has been detected during that monitoring.

(2) *Other equipment.* The identification that has been placed, pursuant to § 63.1023(e)(1), on equipment determined to have a leak, except for a valve or for a connector in gas/vapor or light liquid service that is subject to the provisions of § 63.1027(b)(3)(iv), may be removed after it is repaired.

(d) *Delay of repair.* Delay of repair is allowed for any of the conditions specified in paragraphs (d)(1) through (d)(5) of this section. The owner or operator shall maintain a record of the facts that explain any delay of repairs and, where appropriate, why the repair was technically infeasible without a process unit shutdown.

(1) Delay of repair of equipment for which leaks have been detected is allowed if repair within 15 days after a leak is detected is technically infeasible without a process unit or affected facility shutdown. Repair of this equipment shall occur as soon as practical, but no later than the end of the next process unit or affected facility shutdown, except as provided in paragraph (d)(5) of this section.

(2) Delay of repair of equipment for which leaks have been detected is allowed for equipment that is isolated from the process and that does not remain in regulated material service.

(3) Delay of repair for valves, connectors, and agitators is also allowed if the provisions of paragraphs (d)(3)(i) and (d)(3)(ii) of this section are met.

(i) The owner or operator determines that emissions of purged material resulting from immediate repair would be greater than the fugitive emissions likely to result from delay of repair, and

(ii) When repair procedures are effected, the purged material is collected and destroyed, collected and routed to a fuel gas system or process, or recovered in a control device complying with either § 63.1034 or § 63.1021(b) of this part.

(4) Delay of repair for pumps is also allowed if the provisions of paragraphs (d)(4)(i) and (d)(4)(ii) of this section are met.

(i) Repair requires replacing the existing seal design with a new system that the owner or operator has determined under the provisions of § 63.1035(d) will provide better performance or one of the specifications of paragraphs (d)(4)(i)(A) through (d)(4)(i)(C) of this section are met.

(A) A dual mechanical seal system that meets the requirements of § 63.1026(e)(1) will be installed;

(B) A pump that meets the requirements of § 63.1026(e)(2) will be installed; or

(C) A system that routes emissions to a process or a fuel gas system or a closed vent system and control device that meets the requirements of § 63.1026(e)(3) will be installed; and

(ii) Repair is completed as soon as practical, but not later than 6 months after the leak was detected.

(5) Delay of repair beyond a process unit or affected facility shutdown will be allowed for a valve if valve assembly replacement is necessary during the process unit or affected facility shutdown, and valve assembly supplies have been depleted, and valve assembly supplies had been sufficiently stocked before the supplies were depleted. Delay of repair beyond the second process unit or affected facility shutdown will not be allowed unless the third process unit or affected facility shutdown occurs sooner than 6 months after the first process unit or affected facility shutdown.

(e) *Unsafe-to-repair—connectors.* Any connector that is designated, as described in § 63.1022(d), as an unsafe-to-repair connector is exempt from the requirements of § 63.1027(d), and paragraph (a) of this section.

(f) *Leak repair records.* For each leak detected, the information specified in paragraphs (f)(1) through (f)(5) of this section shall be recorded and

subject to the provisions of § 63.1024(e) may be designated unsafe-to-repair if the owner or operator determines that repair personnel would be exposed to an immediate danger as a consequence of complying with the repair requirements of this subpart, and if the connector will be repaired before the end of the next process unit or affected facility shutdown as specified in § 63.1024(e)(2).

(2) *Identification of equipment.* The identity of connectors designated as unsafe-to-repair and an explanation why the connector is unsafe-to-repair shall be recorded.

(e) *Special equipment designations: Compressors operating with an instrument reading of less than 500 parts per million-above background.* Identify the compressors that the owner or operator elects to designate as operating with an instrument reading of less than 500 parts per million above background, under the provisions of § 63.1031(f).

(f) *Special equipment designations: Equipment in heavy liquid service.* The owner or operator of equipment in heavy liquid service shall comply with the requirements of either paragraph (f)(1) or (f)(2) of this section, as provided in paragraph (f)(3) of this section.

(1) Retain information, data, and analyses used to determine that a piece of equipment is in heavy liquid service.

(2) When requested by the Administrator, demonstrate that the piece of equipment or process is in heavy liquid service.

(3) A determination or demonstration that a piece of equipment or process is in heavy liquid service shall include an analysis or demonstration that the process fluids do not meet the definition of "in light liquid service." Examples of information that could document this include, but are not limited to, records of chemicals purchased for the process, analyses of process stream composition, engineering calculations, or process knowledge.

§ 63.1023 Instrument and sensory monitoring for leaks.

(a) *Monitoring for leaks.* The owner or operator of a regulated source subject to this subpart shall monitor regulated equipment as specified in paragraph (a)(1) of this section for instrument monitoring and paragraph (a)(2) of this section for sensory monitoring.

(1) *Instrument monitoring for leaks.* (i) Valves in gas and vapor service and in light liquid service shall be monitored pursuant to § 63.1025(b).

(ii) Pumps in light liquid service shall be monitored pursuant to § 63.1026(b).

(iii) Connectors in gas and vapor service and in light liquid service shall be monitored pursuant to § 63.1027(b).

(iv) Agitators in gas and vapor service and in light liquid service shall be monitored pursuant to § 63.1028(c).

(v) Pressure relief devices in gas and vapor service shall be monitored pursuant to § 63.1030(c).

(vi) Compressors designated to operate with an instrument reading less than 500 parts per million above background, as described in § 63.1022(e), shall be monitored pursuant to § 63.1031(f).

(2) *Sensory monitoring for leaks.* (i) Pumps in light liquid service shall be observed pursuant to §§ 63.1026(b)(4) and (e)(1)(v).

(ii) [Reserved].

(iii) Agitators in gas and vapor service and in light liquid service shall be observed pursuant to § 63.1028(c)(3) or (e)(1)(iv).

(iv) [Reserved].

(b) *Instrument monitoring methods.* Instrument monitoring, as required under this subpart, shall comply with the requirements specified in paragraphs (b)(1) through (b)(6) of this section.

(1) *Monitoring method.* Monitoring shall comply with Method 21 of 40 CFR part 60, appendix A, except as otherwise provided in this section.

(2) *Detection instrument performance criteria.* (i) Except as provided for in paragraph (b)(2)(ii) of this section, the detection instrument shall meet the performance criteria of Method 21 of 40 CFR part 60, appendix A, except the instrument response factor criteria in section 3.1.2, paragraph (a) of Method 21 shall be for the representative composition of the process fluid not each individual VOC in the stream. For process streams that contain nitrogen, air, water or other inerts that are not HAP or VOC, the representative stream response factor shall be determined on an inert-free basis. The response factor may be determined at any concentration for which monitoring for leaks will be conducted.

(ii) If there is no instrument commercially available that will meet the performance criteria specified in paragraph (b)(2)(i) of this section, the instrument readings may be adjusted by multiplying by the representative response factor of the process fluid, calculated on an inert-free basis as described in paragraph (b)(2)(i) of this section.

(3) *Detection instrument calibration procedure.* The detection instrument shall be calibrated before use on each day of its use by the procedures specified in Method 21 of 40 CFR part 60, appendix A.

(4) *Detection instrument calibration gas.* Calibration gases shall be zero air (less than 10 parts per million of hydrocarbon in air): and the gases specified in paragraph (b)(4)(i) of this section except as provided in paragraph (b)(4)(ii) of this section.

(i) Mixtures of methane in air at a concentration no more than 2,000 parts per million greater than the leak definition concentration of the equipment monitored. If the monitoring instrument's design allows for multiple calibration scales, then the lower scale shall be calibrated with a calibration gas that is no higher than 2,000 parts per million above the concentration specified as a leak, and the highest scale shall be calibrated with a calibration gas that is approximately equal to 10,000 parts per million. If only one scale on an instrument will be used during monitoring, the owner or operator need not calibrate the scales that will not be used during that day's monitoring.

(ii) A calibration gas other than methane in air may be used if the instrument does not respond to methane or if the instrument does not meet the performance criteria specified in paragraph (b)(2)(i) of this section. In such cases, the calibration gas may be a mixture of one or more of the compounds to be measured in air.

(5) *Monitoring performance.* Monitoring shall be performed when the equipment is in regulated material service or is in use with any other detectable material.

(6) *Monitoring data.* Monitoring data obtained prior to the regulated source becoming subject to the referencing subpart that do not meet the criteria specified in paragraphs (b)(1) through (b)(5) of this section may still be used to qualify initially for less frequent monitoring under the provisions in § 63.1025(a)(2), (b)(3) or (b)(4) for valves or § 63.1027(b)(3) for connectors provided the departures from the criteria or from the specified monitoring frequency of § 63.1025(b)(3) or (b)(4) or § 63.1027(b)(3) are minor and do not significantly affect the quality of the data. Examples of minor departures are monitoring at a slightly different frequency (such as every 6 weeks instead of monthly or quarterly), following the performance criteria of section 3.1.2, paragraph (a) of Method 21 of Appendix A of 40 CFR part 60 instead of paragraph (b)(2) of this section, or monitoring using a different leak definition if the data would indicate the presence or absence of a leak at the concentration specified in this subpart. Failure to use a calibrated

(iii) For each kind of equipment for which permission is requested, the emission reduction achieved by the alternative means of emission limitation shall be demonstrated.

(iv) Each owner or operator applying for such permission shall commit, in writing, for each kind of equipment to work practices that provide for emission reductions equal to or greater than the emission reductions achieved by the required work practices.

(v) The Administrator will compare the demonstrated emission reduction for the alternative means of emission limitation to the demonstrated emission reduction for the required work practices and will consider the commitment in paragraph (d)(2)(iv) of this section.

(vi) The Administrator may condition the permission on requirements that may be necessary to ensure operation and maintenance to achieve the same or greater emission reduction as the required work practices of this subpart.

(3) An owner or operator may offer a unique approach to demonstrate the alternative means of emission limitation.

(4) If, in the judgement of the Administrator, an alternative means of emission limitation will be approved, the Administrator will publish a notice of the determination in the **Federal Register** using the procedures specified in the referencing subpart.

§ 63.1022 Equipment identification.

(a) *General equipment identification.* Equipment subject to this subpart shall be identified. Identification of the equipment does not require physical tagging of the equipment. For example, the equipment may be identified on a plant site plan, in log entries, by designation of process unit or affected facility boundaries by some form of weatherproof identification, or by other appropriate methods.

(b) *Additional equipment identification.* In addition to the general identification required by paragraph (a) of this section, equipment subject to any of the provisions in §§ 63.1023 through 63.1034 shall be specifically identified as required in paragraphs (b)(1) through (b)(5) of this section, as applicable. This paragraph does not apply to an owner or operator of a batch product process who elects to pressure test the batch product process equipment train pursuant to § 63.1036.

(1) *Connectors.* Except for inaccessible, ceramic, or ceramic-lined connectors meeting the provision of § 63.1027(e)(2) and instrumentation systems identified pursuant to paragraph (b)(4) of this section, identify the connectors subject to the requirements of this subpart. Connectors need not be individually identified if all connectors in a designated area or length of pipe subject to the provisions of this subpart are identified as a group, and the number of connectors subject is indicated. With respect to connectors, the identification shall be complete no later than the completion of the initial survey required by paragraph (a) of this section.

(2) *Routed to a process or fuel gas system or equipped with a closed vent system and control device.* Identify the equipment that the owner or operator elects to route to a process or fuel gas system or equip with a closed vent system and control device, under the provisions of § 63.1026(e)(3) (pumps in light liquid service), § 63.1028(e)(3) (agitators), § 63.1030(d) (pressure relief devices in gas and vapor service), § 63.1031(e) (compressors), or § 63.1037(a) (alternative means of emission limitation for enclosed-vented process units).

(3) *Pressure relief devices.* Identify the pressure relief devices equipped with rupture disks, under the provisions of § 63.1030(e).

(4) *Instrumentation systems.* Identify instrumentation systems subject to the provisions of § 63.1029 of this subpart. Individual components in an instrumentation system need not be identified.

(5) *Equipment in service less than 300 hours per calendar year.* The identity, either by list, location (area or group), or other method, of equipment in regulated material service less than 300 hours per calendar year within a process unit or affected facilities subject to the provisions of this subpart shall be recorded.

(c) *Special equipment designations: Equipment that is unsafe or difficult-to-monitor.* (1) *Designation and criteria for unsafe-to-monitor.* Valves meeting the provisions of § 63.1025(e)(1), pumps meeting the provisions of § 63.1026(e)(6), connectors meeting the provisions of § 63.1027(e)(1), and agitators meeting the provisions of § 63.1028(e)(7) may be designated unsafe-to-monitor if the owner or operator determines that monitoring personnel would be exposed to an immediate danger as a consequence of complying with the monitoring requirements of this subpart. Examples of unsafe-to-monitor equipment include, but is not limited to, equipment under extreme pressure or heat.

(2) *Designation and criteria for difficult-to-monitor.* Valves meeting the provisions of § 63.1025(e)(2) may be designated difficult-to-monitor if the provisions of paragraph (c)(2)(i) apply. Agitators meeting the provisions of § 63.1028(e)(5) may be designated difficult-to-monitor if the provisions of paragraph (c)(2)(ii) apply.

(i) *Valves.* (A) The owner or operator of the valve determines that the valve cannot be monitored without elevating the monitoring personnel more than 2 meters (7 feet) above a support surface or it is not accessible in a safe manner when it is in regulated material service; and

(B) The process unit or affected facility within which the valve is located is an existing source, or the owner or operator designates less than 3 percent of the total number of valves in a new source as difficult-to-monitor.

(ii) *Agitators.* The owner or operator determines that the agitator cannot be monitored without elevating the monitoring personnel more than 2 meters (7 feet) above a support surface or it is not accessible in a safe manner when it is in regulated material service.

(3) *Identification of unsafe or difficult-to-monitor equipment.* The owner or operator shall record the identity of equipment designated as unsafe-to-monitor according to the provisions of paragraph (c)(1) of this section and the planned schedule for monitoring this equipment. The owner or operator shall record the identity of equipment designated as difficult-to-monitor according to the provisions of paragraph (c)(2) of this section, the planned schedule for monitoring this equipment, and an explanation why the equipment is unsafe or difficult-to-monitor. This record must be kept at the plant and be available for review by an inspector.

(4) *Written plan requirements.* (i) The owner or operator of equipment designated as unsafe-to-monitor according to the provisions of paragraph (c)(1) of this section shall have a written plan that requires monitoring of the equipment as frequently as practical during safe-to-monitor times, but not more frequently than the periodic monitoring schedule otherwise applicable, and repair of the equipment according to the procedures in § 63.1024 if a leak is detected.

(ii) The owner or operator of equipment designated as difficult-to-monitor according to the provisions of paragraph (c)(2) of this section shall have a written plan that requires monitoring of the equipment at least once per calendar year and repair of the equipment according to the procedures in § 63.1024 if a leak is detected.

(d) *Special equipment designations: Equipment that is unsafe-to-repair.* (1) *Designation and criteria.* Connectors

Pressure relief device or valve means a safety device used to prevent operating pressures from exceeding the maximum allowable working pressure of the process equipment. A common pressure relief device is a spring-loaded pressure relief valve. Devices that are actuated either by a pressure of less than or equal to 2.5 pounds per square inch gauge or by a vacuum are not pressure relief devices.

Process unit means the equipment specified in the definitions of process unit in the applicable referencing subpart. If the referencing subpart does not define process unit, then for the purposes of this part, process unit means the equipment assembled and connected by pipes or ducts to process raw materials and to manufacture an intended product.

Process unit shutdown means a work practice or operational procedure that stops production from a process unit, or part of a process unit during which it is technically feasible to clear process material from a process unit, or part of a process unit, consistent with safety constraints and during which repairs can be affected. The following are not considered process unit shutdowns:

(1) An unscheduled work practice or operations procedure that stops production from a process unit, or part of a process unit, for less than 24 hours.

(2) An unscheduled work practice or operations procedure that would stop production from a process unit, or part of a process unit, for a shorter period of time than would be required to clear the process unit, or part of the process unit, of materials and start up the unit, and would result in greater emissions than delay of repair of leaking components until the next scheduled process unit shutdown.

(3) The use of spare equipment and technically feasible bypassing of equipment without stopping production.

Referencing subpart means the subpart that refers an owner or operator to this subpart.

Regulated material, for purposes of this part, refers to gas from volatile organic liquids (VOL), volatile organic compounds (VOC), hazardous air pollutants (HAP), or other chemicals or groups of chemicals that are regulated by the referencing subpart.

Regulated source for the purposes of this part, means the stationary source, the group of stationary sources, or the portion of a stationary source that is regulated by a referencing subpart.

Relief device or valve means a valve used only to release an unplanned, nonroutine discharge. A relief valve discharge can result from an operator error, a malfunction such as a power failure or equipment failure, or other unexpected cause that requires immediate venting of gas from process equipment in order to avoid safety hazards or equipment damage.

Repaired, for the purposes of this subpart, means that equipment is adjusted, or otherwise altered, to eliminate a leak as defined in the applicable sections of this subpart and unless otherwise specified in applicable provisions of this subpart, is monitored as specified in §§ 63.1023(b) and (c) to verify that emissions from the equipment are below the applicable leak definition.

Routed to a process or route to a process means the emissions are conveyed to any enclosed portion of a process unit where the emissions are predominantly recycled and/or consumed in the same manner as a material that fulfills the same function in the process and/or transformed by chemical reaction into materials that are not regulated materials and/or incorporated into a product; and/or recovered.

Sampling connection system means an assembly of equipment within a process unit or affected facility used during periods of representative operation to take samples of the process fluid. Equipment used to take nonroutine grab samples is not considered a sampling connection system.

Screwed (threaded) connector means a threaded pipe fitting where the threads are cut on the pipe wall and the fitting requires only two pieces to make the connection (i.e., the pipe and the fitting).

Sensor means a device that measures a physical quantity or the change in a physical quantity, such as temperature, pressure, flow rate, pH, or liquid level.

Set pressure means for the purposes of this subpart, the pressure at which a properly operating pressure relief device begins to open to relieve atypical process system operating pressure.

Start-up means the setting into operation of a piece of equipment or a control device that is subject to this subpart.

§ 63.1021 Alternative means of emission limitation.

(a) *Performance standard exemption.* The provisions of paragraph (b) of this section do not apply to the performance standards of § 63.1030(b) for pressure relief devices or § 63.1031(f) for compressors operating under the alternative compressor standard.

(b) *Requests by owners or operators.* An owner or operator may request a determination of alternative means of emission limitation to the requirements of §§ 63.1025 through 63.1034 as provided in paragraph (d) of this section. If the Administrator makes a determination that a means of emission limitation is a permissible alternative, the owner or operator shall either comply with the alternative or comply with the requirements of §§ 63.1025 through 63.1034.

(c) *Requests by manufacturers of equipment.* (1) Manufacturers of equipment used to control equipment leaks of the regulated material may apply to the Administrator for permission for an alternative means of emission limitation that achieves a reduction in emissions of the regulated material achieved by the equipment, design, and operational requirements of this subpart.

(2) The Administrator will grant permission according to the provisions of paragraph (d) of this section.

(d) *Permission to use an alternative means of emission limitation.* Permission to use an alternative means of emission limitation shall be governed by the procedures in paragraphs (d)(1) through (d)(4) of this section.

(1) Where the standard is an equipment, design, or operational requirement, the requirements of paragraphs (d)(1)(i) through (d)(1)(iii) of this section apply.

(i) Each owner or operator applying for permission to use an alternative means of emission limitation shall be responsible for collecting and verifying emission performance test data for an alternative means of emission limitation.

(ii) The Administrator will compare test data for the means of emission limitation to test data for the equipment, design, and operational requirements.

(iii) The Administrator may condition the permission on requirements that may be necessary to ensure operation and maintenance to achieve at least the same emission reduction as the equipment, design, and operational requirements of this subpart.

(2) Where the standard is a work practice, the requirements of paragraphs (d)(2)(i) through (d)(2)(vi) of this section apply.

(i) Each owner or operator applying for permission to use an alternative means of emission limitation shall be responsible for collecting and verifying test data for the alternative.

(ii) For each kind of equipment for which permission is requested, the emission reduction achieved by the required work practices shall be demonstrated for a minimum period of 12 months.

analyze, and provide a record of process or control system parameters.

Control device means any combustion device, recovery device, recapture device, or any combination of these devices used to comply with this part. Such equipment or devices include, but are not limited to, absorbers, carbon adsorbers, condensers, incinerators, flares, boilers, and process heaters. Primary condensers on steam strippers or fuel gas systems are not considered control devices.

Distance piece means an open or enclosed casing through which the piston rod travels, separating the compressor cylinder from the crankcase.

Double block and bleed system means two block valves connected in series with a bleed valve or line that can vent the line between the two block valves.

Equipment means each pump, compressor, agitator, pressure relief device, sampling connection system, open-ended valve or line, valve, connector, and instrumentation system in regulated material service; and any control devices or systems used to comply with this subpart.

First attempt at repair, for the purposes of this subpart, means to take action for the purpose of stopping or reducing leakage of organic material to the atmosphere, followed by monitoring as specified in §§ 63.1023(b) and (c) of this subpart in to verify whether the leak is repaired, unless the owner or operator determines by other means that the leak is not repaired.

Fuel gas means gases that are combusted to derive useful work or heat.

Fuel gas system means the offsite and onsite piping and flow and pressure control system that gathers gaseous stream(s) generated by onsite operations, may blend them with other sources of gas, and transports the gaseous stream for use a fuel gas in combustion equipment, such as furnaces and gas turbines, either singly or in combination.

In food and medical service means that a piece of equipment in regulated material service contacts a process stream used to manufacture a Food and Drug Administration regulated product where leakage of a barrier fluid into the process stream would cause any of the following:

(1) A dilution of product quality so that the product would not meet written specifications,

(2) An exothermic reaction which is a safety hazard,

(3) The intended reaction to be slowed down or stopped, or

(4) An undesired side reaction to occur.

In gas and vapor service means that a piece of equipment in regulated material service contains a gas or vapor at operating conditions.

In heavy liquid service means that a piece of equipment in regulated material service is not in gas and vapor service or in light liquid service.

In light liquid service means that a piece of equipment in regulated material service contains a liquid that meets the following conditions:

(1) The vapor pressure of one or more of the organic compounds is greater than 0.3 kilopascals at 20° C.

(2) The total concentration of the pure organic compounds constituents having a vapor pressure greater than 0.3 kilopascals at 20° C is equal to or greater than 20 percent by weight of the total process stream, and

(3) The fluid is a liquid at operating conditions.

(Note to definition of "in light liquid service": Vapor pressures may be determined by standard reference texts or ASTM D–2879.)

In liquid service means that a piece of equipment in regulated material service is not in gas and vapor service.

In organic hazardous air pollutant or in organic HAP service means that piece of equipment either contains or contracts a fluid (liquid or gas) that is at least 5 percent by weight of total organic HAP's as determined according to the provisions of § 63.180(d) of subpart H. The provisions of § 63.180(d) of subpart H also specify how to determine that a piece of equipment is not in organic HAP service.

In regulated material service means, for the purposes of this subpart, equipment which meets the definition of "in VOC service," "in VHAP service," "in organic hazardous air pollutant service," or "in" other chemicals or groups of chemicals "service" as defined in the referencing subpart.

In-situ sampling systems means nonextractive samplers or in-line samplers.

In vacuum service means that equipment is operating at an internal pressure which is at least 5 kilopascals below ambient pressure.

Initial startup means for new sources, the first time the source begins production. For additions or changes not defined as a new source by this subpart, initial startup means the first time additional or changed equipment is put into operation. Initial startup does not include operation solely for testing of equipment. Initial startup does not include subsequent startup of process units following malfunction or process unit shutdowns. Except for equipment leaks, initial startup also does not include subsequent startups (of process units following changes in product for flexible operation units or following recharging of equipment in batch unit operations).

Instrumentation system means a group of equipment components used to condition and convey a sample of the process fluid to analyzers and instruments for the purpose of determining process operating conditions (e.g., composition, pressure, flow, etc.). Valves and connectors are the predominant type of equipment used in instrumentation systems; however, other types of equipment may also be included in these systems. Only valves nominally 1.27 centimeters (0.5 inches) and smaller, and connectors nominally 1.91 centimeters (0.75 inches) and smaller in diameter are considered instrumentation systems for the purposes of this subpart. Valves greater than nominally 1.27 centimeters (0.5 inches) and connectors greater than nominally 1.91 centimeters (0.75 inches) associated with instrumentation systems are not considered part of instrumentation systems and must be monitored individually.

Liquids dripping means any visible leakage from the seal including dripping, spraying, misting, clouding, and ice formation. Indications of liquids dripping include puddling or new stains that are indicative of an existing evaporated drip.

Nonrepairable means that it is technically infeasible to repair a piece of equipment from which a leak has been detected without a process unit or affected facility shutdown.

Open-ended valve or line means any valve, except relief valves, having one side of the valve seat in contact with process fluid and one side open to atmosphere, either directly or through open piping.

Organic monitoring device means a unit of equipment used to indicate the concentration level of organic compounds based on a detection principle such as infra-red, photoionization, or thermal conductivity.

Polymerizing monomer means a compound which may form polymer buildup in pump mechanical seals resulting in rapid mechanical seal failure.

Pressure release means the emission of materials resulting from the system pressure being greater than the set pressure of the relief device. This release can be one release or a series of releases over a short time period due to a malfunction in the process.

(ii) For each month during the semiannual reporting period.

(A) Number of valves for which leaks were detected as described in § 63.1006(b).

(B) Number of valves for which leaks were not repaired as required in § 63.1006(d).

(C) Number of pumps for which leaks were detected as described in § 63.1007(b) and § 63.1007(e)(1)(vi).

(D) Number of pumps for which leaks were not repaired as required in §§ 63.1007(d) and (e)(5).

(E) Number of compressors for which leaks were detected as described in § 63.1012(d)(1).

(F) Number of compressors for which leaks were not repaired as required in § 63.1012(d)(1), and

(G) The facts that explain each delay of repair and, where appropriate, why the repair was technically infeasible without a process unit or affected facility shutdown.

(iii) Dates of process unit or affected facility shutdowns which occurred within the periodic report reporting period.

(iv) Revisions to items reported according to paragraph (a)(1) of this section if changes have occurred since the initial report or subsequent revisions to the initial report.

(b) *Special notifications.* An owner or operator electing to comply with either of the alternatives in § 63.1006(b)(5) or (6) shall notify the Administrator of the alternative standard selected before implementing either of the provisions.

4. Part 63 is amended by adding subpart UU as follows:

Subpart UU—National Emission Standards for Equipment Leaks—Control Level 2 Standards

Sec.

63.1019 Applicability.
63.1020 Definitions.
63.1021 Alternative means of emission limitation.
63.1022 Equipment identification.
63.1023 Instrument and sensory monitoring for leaks.
63.1024 Leak repair.
63.1025 Valves in gas and vapor service and in light liquid service standards.
63.1026 Pumps in light liquid service standards.
63.1027 Connectors in gas and vapor service and in light liquid service standards.
63.1028 Agitators in gas and vapor service and in light liquid service standards.
63.1029 Pumps, valves, connectors, and agitators in heavy liquid service; pressure relief devices in liquid service; and instrumentation systems standards.
63.1030 Pressure relief devices in gas and vapor service standards.
63.1031 Compressors standards.
63.1032 Sampling connection systems standards.
63.1033 Open-ended valves or lines standards.
63.1034 Closed vent systems and control devices; or emissions routed to a fuel gas system or process standards.
63.1035 Quality improvement program for pumps.
63.1036 Alternative means of emission limitation: Batch processes.
63.1037 Alternative means of emission limitation: Enclosed vented process units or affected facilities.
63.1038 Recordkeeping requirements.
63.1039 Reporting requirements.
Table 1 to Subpart UU—Batch Processes Monitoring Frequency for Equipment Other Than Connectors

Subpart UU—National Emission Standards for Equipment Leaks—Control Level 2 Standards

§ 63.1019 Applicability.

(a) The provisions of this subpart apply to the control of air emissions from equipment leaks for which another subpart references the use of this subpart for such air emission control. These air emission standards for equipment leaks are placed here for administrative convenience and only apply to those owners and operators of facilities subject to a referencing subpart. The provisions of 40 CFR part 63, subpart A (General Provisions) do not apply to this subpart except as noted in the referencing subpart.

(b) *Equipment subject to this subpart.* The provisions of this subpart and the referencing subpart apply to equipment that contains or contacts regulated material. This subpart applies to pumps, compressors, agitators, pressure relief devices, sampling connection systems, open-ended valves or lines, valves, connectors, instrumentation systems, and closed vent systems and control devices used to meet the requirements of this subpart.

(c) *Equipment in vacuum service.* Equipment in vacuum service is excluded from the requirements of this subpart.

(d) *Equipment in service less than 300 hours per calendar year.* Equipment intended to be in regulated material service less than 300 hours per calendar year is excluded from the requirements of §§ 63.1025 through 63.1034 and § 63.1036 if it is identified as required in § 63.1022(b)(5).

(e) *Lines and equipment not containing process fluids.* Lines and equipment not containing process fluids are not subject to the provisions of this subpart. Utilities, and other non-process lines, such as heating and cooling systems that do not combine their materials with those in the processes they serve, are not considered to be part of a process unit or affected facility.

§ 63.1020 Definitions.

All terms used in this part shall have the meaning given them in the Act and in this section.

Batch process means a process in which the equipment is fed intermittently or discontinuously. Processing then occurs in this equipment after which the equipment is generally emptied. Examples of industries that use batch processes include pharmaceutical production and pesticide production.

Batch product-process equipment train means the collection of equipment (e.g., connectors, reactors, valves, pumps, etc.) configured to produce a specific product or intermediate by a batch process.

Car-seal means a seal that is placed on a device that is used to change the position of a valve (e.g., from opened to closed) in such a way that the position of the valve cannot be changed without breaking the seal.

Closed-loop system means an enclosed system that returns process fluid to the process and is not vented directly to the atmosphere.

Closed-purge system means a system or combination of systems and portable containers to capture purged liquids. Containers must be covered or closed when not being filled or emptied.

Closed-vent system means a system that is not open to the atmosphere and is composed of piping, ductwork, connections, and, if necessary, flow inducing devices that transport gas or vapor from an emission point to a control device.

Combustion device means an individual unit of equipment, such as a flare, incinerator, process heater, or boiler, used for the combustion of organic emissions.

Connector means flanged, screwed, or other joined fittings used to connect two pipelines or a pipeline and a piece of equipment. A common connector is a flange. Joined fittings welded completely around the circumference of the interface are not considered connectors for the purpose of this regulation. For the purpose of reporting and recordkeeping, connector means joined fittings that are not inaccessible, ceramic, or ceramic-lined (e.g., porcelain, glass, or glass-lined) as described in § 63.1027(e)(2).

Continuous parameter monitoring system (CPMS) means the total equipment that may be required to meet the data acquisition and availability requirements of this part, used to sample, condition (if applicable),

greater or to reduce emissions of regulated material to a concentration of 20 parts per million by volume or, for an enclosed combustion device, to provide a minimum of 760° C (1400° F). Owners and operators of closed vent systems and nonflare control devices used to comply with this subpart shall comply with the provisions of subpart SS of this part, except as provided in § 63.1002(b).

(2) Owners or operators of closed vent systems and flares used to comply with the provisions of this subpart shall design and operate the flare as specified in subpart SS of this part, except as provided in § 63.1002(b).

(3) Owners or operators routing emissions from equipment leaks to a fuel gas system or process shall comply with the provisions of subpart SS of this part, except as provided in § 63.1002(b).

§ 63.1016 Alternative means of emission limitation: Enclosed-vented process units.

(a) *Use of closed vent system and control device.* Process units of affected facilities or portions of process units of affected facilities enclosed in such a manner that all emissions from equipment leaks are routed to a process or fuel gas system or collected and vented through a closed vent system to a control device meeting the requirements of either § 63.1015 or § 63.1002(b) are exempt from the requirements of §§ 63.1006 through 63.1014. The enclosure shall be maintained under a negative pressure at all times while the process unit or affected facility is in operation to ensure that all emissions are routed to a control device.

(b) *Recordkeeping.* Owners and operators choosing to comply with the requirements of this section shall maintain the records specified in paragraphs (b)(1) through (b)(3) of this section.

(1) Identification of the process unit(s) or affected facilities and the regulated materials they handle.

(2) A schematic of the process unit or affected facility, enclosure, and closed vent system.

(3) A description of the system used to create a negative pressure in the enclosure to ensure that all emissions are routed to the control device.

§ 63.1017 Recordkeeping requirements.

(a) *Recordkeeping system.* An owner or operator of more than one regulated source subject to the provisions of this subpart may comply with the recordkeeping requirements for these regulated sources in one recordkeeping system. The recordkeeping system shall identify each record by regulated source and the type of program being implemented (e.g., quarterly monitoring) for each type of equipment. The records required by this subpart are summarized in paragraphs (b) and (c) of this section.

(b) *General equipment leak records.* (1) As specified in § 63.1003(a) through (d), the owner or operator shall keep general and specific equipment identification if the equipment is not physically tagged and the owner or operator is electing to identify the equipment subject to this subpart through written documentation such as a log or other designation.

(2) The owner or operator shall keep a written plan as specified in § 63.1003(c)(5) for any equipment that is designated as unsafe or difficult-to-monitor.

(3) The owner or operator shall maintain the identity and an explanation as specified in § 63.1003(d)(1) for any equipment that is designated as unsafe-to-repair.

(4) As specified in § 63.1003(e), the owner or operator shall maintain the identity of compressors operating with an instrument reading of less than 500 parts per million.

(5) The owner or operator shall keep records for leaking equipment as specified in § 63.1004(e).

(6) The owner or operator shall keep records for delay of repair as specified in § 63.1005(c) and records for leak repair as specified in § 63.1005(e).

(c) *Specific equipment leak records.* (1) For valves, the owner or operator shall maintain the monitoring schedule for each process unit as specified in § 63.1006(b), and the records specified in § 63.1006(e)(4)(i)(B).

(2) For pumps, the owner or operator shall maintain the records specified in paragraphs (c)(2)(i) through (c)(2)(iii) of this section.

(i) Documentation of pump visual inspections as specified in § 63.1007(b)(4).

(ii) Documentation of dual mechanical seal pump visual inspections as specified in § 63.1007(e)(1)(v).

(iii) For the criteria as to the presence and frequency of drips for dual mechanical seal pumps, records of the design criteria and explanations and any changes and the reason for the changes, as specified in § 63.1007(e)(1)(i).

(3) [Reserved]

(4) For agitators, the owner or operator shall maintain records specified in paragraphs (c)(4)(i) and (c)(4)(ii) of this section.

(i) Documentation of the agitator seal visual inspections as specified in § 63.1009(b)(3).

(ii) Documentation of the design criteria and explanations and any changes and the reason for the changes, as specified in § 63.1009(e)(1)(vi)(A).

(5) For pressure relief devices in gas and vapor or light liquid service, the owner or operator shall keep records of the dates and results of monitoring following a pressure release, as specified in § 63.1011(c)(3).

(6) For compressors, the owner or operator shall maintain the records specified in paragraphs (c)(6)(i) and (c)(6)(ii) of this section.

(i) For criteria as to failure of the seal system and/or the barrier fluid system, record the design criteria and explanations and any changes and the reason for the changes, as specified in § 63.1012(d)(2).

(ii) For compressors operating under the alternative compressor standard, record the dates and results of each compliance test as specified in § 63.1012(f)(2).

(7) For process units complying with the enclosed-vented process unit alternative, the owner or operator shall maintain the records for enclosed-vented process units as specified in § 63.1016(b).

§ 63.1018 Reporting requirements.

(a) *Periodic Reports.* The owner or operator shall report the information specified in paragraphs (a)(1) through (a)(2) of this section, as applicable, in the periodic report specified in the referencing subpart.

(1) The initial Periodic Report shall include the information specified in paragraphs (a)(1)(i) through (a)(1)(iv) and (a)(2) of this section.

(i) Process unit or affected facility identification.

(ii) Number of valves subject to the requirements of § 63.1006, excluding those valves designated for no detectable emissions under the provisions of § 63.1006(e)(4).

(iii) Number of pumps subject to the requirements of § 63.1007, excluding those pumps designated for no detectable emissions under the provisions of § 63.1007(e)(2) and those pumps complying with the closed vent system provisions of § 63.1007(e)(3).

(iv) Number of compressors subject to the requirements of § 63.1012, excluding those compressors designated for no detectable emissions under the provisions of § 63.1012(f) and those compressors complying with the closed vent system provisions of § 63.1012(e).

(2) Each periodic report shall contain the information listed in paragraphs (a)(2)(i) through (a)(2)(iv) of this section, as applicable.

(i) Process unit identification.

(2) The owner or operator shall keep records of the design criteria and an explanation of the design criteria; and any changes to these criteria and the reasons for the changes.

(e) *Routed to a process or fuel gas system or equipped with a closed vent system and control device.* A compressor is exempt from the requirements of paragraphs (b) through (d) of this section if it is equipped with a system to capture and transport leakage from the compressor drive shaft seal to a process or a fuel gas system or to a closed vent system that captures and transports leakage from the compressor to a control device meeting the requirements of § 63.1015.

(f) *Alternative compressor standard.* (1) Any compressor that is designated as described in § 63.1003(e)(e) as operating with no detectable emissions shall operate at all times with an instrument reading of less than 500 parts per million. A compressor so designated is exempt from the requirements of paragraphs (b) through (d) of this section if the compressor is demonstrated initially upon designation, annually, and at other times requested by the Administrator to be operating with an instrument reading of less than 500 parts per million as measured by the method specified in § 63.1004(c). A compressor may not be designated or operated having an instrument reading of less than 500 parts per million as described in § 63.1003(e) if the compressor has a maximum instrument reading greater than 500 parts per million.

(2) The owner or operator shall record the dates and results of each compliance test including the background level measured and the maximum instrument reading measured during each compliance test.

(g) *Reciprocating compressor exemption.* Any existing reciprocating compressor in a process unit or affected facility that becomes an affected facility under provisions of 40 CFR 60.14 or 60.15 is exempt from paragraphs (b), (c), and (d) of this section provided the owner or operator demonstrates that recasting the distance piece or replacing the compressor are the only options available to bring the compressor into compliance with the provisions of the above exempted paragraphs of this section.

§ 63.1013 Sampling connection systems standards.

(a) *Compliance schedule.* The owner or operator shall comply with this section no later than the compliance dates specified in the referencing subpart.

(b) *Equipment requirement.* Each sampling connection system shall be equipped with a closed purge, closed loop, or closed vent system, except as provided in paragraph (d) of this section. Gases displaced during filling of the sample container are not required to be collected or captured.

(c) *Equipment design and operation.* Each closed-purge, closed-loop, or closed vent system except as provided in paragraph (d) of this section shall meet the applicable requirements specified in paragraphs (c)(1) through (c)(5) of this section.

(1) The system shall return the purged process fluid directly to a process line or fuel gas system meeting the compliance determinations in §§ 63.1015 or 63.1002(b) as appropriate; or

(2) Collect and recycle the purged process fluid to a process; or

(3) Be designed and operated to capture and transport all the purged process fluid to a control device that meets the requirements of § 63.1015; or

(4) Collect, store, and transport the purged process fluid to a system or facility identified in paragraph (c)(4)(i), (c)(4)(ii), or (c)(4)(iii) of this section.

(i) A waste management unit as defined in 40 CFR 63.111 or 40 CFR part 63, subpart G, if the waste management unit is complying with the provisions of 40 CFR part 63, subpart G, applicable to group 1 wastewater streams. If the purged process fluid does not contain any organic HAP listed in table 9 of 40 CFR part 63, subpart G, the waste management unit need not be subject to, and operated in compliance with the requirements of 40 CFR part 63, subpart G, applicable to subject wastewater steams provided the facility has a National Pollution Discharge Elimination System (NPDES) permit or sends the wastewater to an NPDES-permitted facility.

(ii) A treatment, storage, or disposal facility subject to regulation under 40 CFR part 262, 264, 265, or 266; or

(iii) A facility permitted, licensed, or registered by a State to manage municipal or industrial solid waste, if the process fluids are not hazardous waste as defined in 40 CFR part 261.

(5) Containers that are part of a closed-purge system must be covered or closed when not being filled or emptied.

(d) *In-situ sampling systems.* In-situ sampling systems and sampling systems without purges are exempt from the requirements of paragraphs (b) and (c) of this section.

§ 63.1014 Open-ended valves or lines standards.

(a) *Compliance schedule.* The owner or operator shall comply with this section no later than the compliance dates specified in the referencing subpart.

(b) *Equipment and operational requirements.*

(1) Each open-ended valve or line shall be equipped with a cap, blind flange, plug, or a second valve, except as provided in § 63.1002(b) and paragraphs (c) and (d) of this section. The cap, blind flange, plug, or second valve shall seal the open end at all times except during operations requiring process fluid flow through the open-ended valve or line, or during maintenance. The operational provisions of paragraphs (b)(2) and (b)(3) of this section also apply.

(2) Each open-ended valve or line equipped with a second valve shall be operated in a manner such that the valve on the process fluid end is closed before the second valve is closed.

(3) When a double block and bleed system is being used, the bleed valve or line may remain open during operations that require venting the line between the block valves but shall comply with paragraph (b)(1) of this section at all other times.

(c) *Emergency shutdown exemption.* Open-ended valves or lines in an emergency shutdown system that are designed to open automatically in the event of a process upset are exempt from the requirements of paragraph (b) of this section.

(d) *Polymerizing materials exemption.* Open-ended valves or lines containing materials that would autocatalytically polymerize or, would present an explosion, serious over pressure, or other safety hazard if capped or equipped with a double block and bleed system as specified in paragraph (b) of this section are exempt from the requirements of paragraph (b) of this section.

§ 63.1015 Closed vent systems and control devices; or emissions routed to a fuel gas system or process.

(a) *Compliance schedule.* The owner or operator shall comply with this section no later than the compliance dates specified in the referencing subpart.

(b) *Compliance standard.* (1) Owners or operators of closed vent systems and nonflare control devices used to comply with provisions of this subpart shall design and operate the closed vent system and nonflare control devices to reduce emissions of regulated material with an efficiency of 95 percent or

the weekly visual inspection requirement of paragraphs (b)(3) and (e)(1)(iv) of this section, and the daily requirements of paragraph (e)(1)(v) of this section, provided that each agitator is visually inspected as often as practical and at least monthly.

(5) *Difficult-to-monitor agitator seals.* Any agitator seal that is designated, as described in § 63.1003(c)(2), as a difficult-to-monitor agitator seal is exempt from the requirements of paragraph (b) of this section and the owner or operator shall monitor the agitator seal according to the written plan specified in § 63.1003(c)(5).

(6) *Equipment obstructions.* Any agitator seal that is obstructed by equipment or piping that prevents access to the agitator by a monitor probe is exempt from the monitoring requirements of paragraph (b) of this section.

(7) *Unsafe-to-monitor agitator seals.* Any agitator seal that is designated, as described in § 63.1003(c)(1), as an unsafe-to-monitor agitator seal is exempt from the requirements of paragraph (b) of this section and the owner or operator of the agitator seal monitors the agitator seal according to the written plan specified in § 63.1003(c)(5).

§ 63.1010 Pumps, valves, connectors, and agitators in heavy liquid service; pressure relief devices in liquid service; and instrumentation systems standards.

(a) *Compliance schedule.* The owner or operator shall comply with this section no later than the compliance dates specified in the referencing subpart.

(b) *Leak detection.* (1) *Monitoring method.* Unless otherwise specified in § 63.1002(b), or § 63.1016, the owner or operator shall comply with paragraphs (b)(1) and (b)(2) of this section. Pumps, valves, connectors, and agitators in heavy liquid service; pressure relief devices in light liquid or heavy liquid service; and instrumentation systems shall be monitored within 5 calendar days by the method specified in § 63.1004(b) if evidence of a potential leak to the atmosphere is found by visual, audible, olfactory, or any other detection method. If such a potential leak is repaired as required in paragraph (c) of this section, it is not necessary to monitor the system for leaks by the method specified in § 63.1004(b).

(2) *Instrument reading that defines a leak.* For systems monitored by the method specified in § 63.1004(b), if an instrument reading of 10,000 parts per million or greater is measured, a leak is detected. If a leak is detected, it shall be identified pursuant to § 63.1004(e) and repaired pursuant to § 63.1005.

(c) *Leak repair.* If a leak is determined pursuant to this section, then the leak shall be repaired using the procedures in § 63.1005, as applicable. For equipment identified in paragraph (b) of this section that is not monitored by the method specified in § 63.1004(b), repaired shall mean that the visual, audible, olfactory, or other indications of a leak to the atmosphere have been eliminated; that no bubbles are observed at potential leak sites during a leak check using soap solution; or that the system will hold a test pressure.

§ 63.1011 Pressure relief devices in gas and vapor service standards.

(a) *Compliance schedule.* The owner or operator shall comply with this section no later than the compliance dates specified in the referencing subpart.

(b) *Compliance standard.* Except during pressure releases as provided for in paragraph (c) of this section, each pressure relief device in gas or vapor service shall be operated with an instrument reading of less than 500 parts per million as measured by the method specified in § 63.1004(c).

(c) *Pressure relief requirements.* (1) After each pressure release, the pressure relief device shall be returned to a condition indicated by an instrument reading of less than 500 parts per million, as soon as practical, but no later than 5 calendar days after each pressure release, except as provided in paragraph (d) of this section.

(2) The pressure relief device shall be monitored no later than five calendar days after the pressure release and being returned to regulated material service to confirm the condition indicated by an instrument reading of less than 500 parts per million, as measured by the method specified in § 63.1004(c).

(3) The owner or operator shall record the dates and results of the monitoring required by paragraph (c)(2) of this section following a pressure release including maximum instrument reading measured during the monitoring and the background level measured if the instrument reading is adjusted for background.

(d) *Pressure relief devices routed to a process or fuel gas system or equipped with a closed vent system and control device.* Any pressure relief device that is routed to a process or fuel gas system or equipped with a closed vent system that captures and transports leakage from the pressure relief device to a control device meeting the requirements of § 63.1015 is exempt from the requirements of paragraphs (b) and (c) of this section.

(e) *Rupture disk exemption.* Any pressure relief device that is equipped with a rupture disk upstream of the pressure relief device is exempt from the requirements of paragraphs (b) and (c) of this section provided the owner or operator installs a replacement rupture disk upstream of the pressure relief device as soon as practical after each pressure release, but no later than 5 calendar days after each pressure release, except as provided in § 63.1005(d).

§ 63.1012 Compressor standards.

(a) *Compliance schedule.* The owner or operator shall comply with this section no later than the compliance dates specified in the referencing subpart.

(b) *Seal system standard.* Each compressor shall be equipped with a seal system that includes a barrier fluid system and that prevents leakage of process fluid to the atmosphere, except as provided in § 63.1002(b) and paragraphs (e) and (f) of this section. Each compressor seal system shall meet the requirements specified in paragraphs (b)(1), (b)(2), or (b)(3) of this section.

(1) Operated with the barrier fluid at a pressure that is greater than the compressor stuffing box pressure at all times (except during periods of startup, shutdown, or malfunction); or

(2) Equipped with a barrier fluid system degassing reservoir that is routed to a process or fuel gas system or connected by a closed-vent system to a control device that meets the requirements of § 63.1015; or

(3) Equipped with a closed-loop system that purges the barrier fluid directly into a process stream.

(c) *Barrier fluid system.* The barrier fluid shall not be in light liquid service. Each barrier fluid system shall be equipped with a sensor that will detect failure of the seal system, barrier fluid system, or both. Each sensor shall be observed daily or shall be equipped with an alarm unless the compressor is located within the boundary of an unmanned plant site.

(d) *Failure criterion and leak detection.* (1) The owner or operator shall determine, based on design considerations and operating experience, a criterion that indicates failure of the seal system, the barrier fluid system, or both. If the sensor indicates failure of the seal system, the barrier fluid system, or both based on the criterion, a leak is detected and shall be repaired pursuant to § 63.1005, as applicable.

the weekly visual inspection requirement of paragraphs (b)(3) and (e)(1)(iv) of this section, and the daily requirements of paragraph (e)(1)(v) of this section, provided that each agitator is visually inspected as often as practical and at least monthly.

(5) *Difficult-to-monitor agitator seals.* Any agitator seal that is designated, as described in § 63.1003(c)(2), as a difficult-to-monitor agitator seal is exempt from the requirements of paragraph (b) of this section and the owner or operator shall monitor the agitator seal according to the written plan specified in § 63.1003(c)(5).

(6) *Equipment obstructions.* Any agitator seal that is obstructed by equipment or piping that prevents access to the agitator by a monitor probe is exempt from the monitoring requirements of paragraph (b) of this section.

(7) *Unsafe-to-monitor agitator seals.* Any agitator seal that is designated, as described in § 63.1003(c)(1), as an unsafe-to-monitor agitator seal is exempt from the requirements of paragraph (b) of this section and the owner or operator of the agitator seal monitors the agitator seal according to the written plan specified in § 63.1003(c)(5).

§ 63.1010 Pumps, valves, connectors, and agitators in heavy liquid service; pressure relief devices in liquid service; and instrumentation systems standards.

(a) *Compliance schedule.* The owner or operator shall comply with this section no later than the compliance dates specified in the referencing subpart.

(b) *Leak detection.* (1) *Monitoring method.* Unless otherwise specified in § 63.1002(b), or § 63.1016, the owner or operator shall comply with paragraphs (b)(1) and (b)(2) of this section. Pumps, valves, connectors, and agitators in heavy liquid service; pressure relief devices in light liquid or heavy liquid service; and instrumentation systems shall be monitored within 5 calendar days by the method specified in § 63.1004(b) if evidence of a potential leak to the atmosphere is found by visual, audible, olfactory, or any other detection method. If such a potential leak is repaired as required in paragraph (c) of this section, it is not necessary to monitor the system for leaks by the method specified in § 63.1004(b).

(2) *Instrument reading that defines a leak.* For systems monitored by the method specified in § 63.1004(b), if an instrument reading of 10,000 parts per million or greater is measured, a leak is detected. If a leak is detected, it shall be identified pursuant to § 63.1004(e) and repaired pursuant to § 63.1005.

(c) *Leak repair.* If a leak is determined pursuant to this section, then the leak shall be repaired using the procedures in § 63.1005, as applicable. For equipment identified in paragraph (b) of this section that is not monitored by the method specified in § 63.1004(b), repaired shall mean that the visual, audible, olfactory, or other indications of a leak to the atmosphere have been eliminated; that no bubbles are observed at potential leak sites during a leak check using soap solution; or that the system will hold a test pressure.

§ 63.1011 Pressure relief devices in gas and vapor service standards.

(a) *Compliance schedule.* The owner or operator shall comply with this section no later than the compliance dates specified in the referencing subpart.

(b) *Compliance standard.* Except during pressure releases as provided for in paragraph (c) of this section, each pressure relief device in gas or vapor service shall be operated with an instrument reading of less than 500 parts per million as measured by the method specified in § 63.1004(c).

(c) *Pressure relief requirements.* (1) After each pressure release, the pressure relief device shall be returned to a condition indicated by an instrument reading of less than 500 parts per million, as soon as practical, but no later than 5 calendar days after each pressure release, except as provided in paragraph (d) of this section.

(2) The pressure relief device shall be monitored no later than five calendar days after the pressure release and being returned to regulated material service to confirm the condition indicated by an instrument reading of less than 500 parts per million, as measured by the method specified in § 63.1004(c).

(3) The owner or operator shall record the dates and results of the monitoring required by paragraph (c)(2) of this section following a pressure release including maximum instrument reading measured during the monitoring and the background level measured if the instrument reading is adjusted for background.

(d) *Pressure relief devices routed to a process or fuel gas system or equipped with a closed vent system and control device.* Any pressure relief device that is routed to a process or fuel gas system or equipped with a closed vent system that captures and transports leakage from the pressure relief device to a control device meeting the requirements of § 63.1015 is exempt from the requirements of paragraphs (b) and (c) of this section.

(e) *Rupture disk exemption.* Any pressure relief device that is equipped with a rupture disk upstream of the pressure relief device is exempt from the requirements of paragraphs (b) and (c) of this section provided the owner or operator installs a replacement rupture disk upstream of the pressure relief device as soon as practical after each pressure release, but no later than 5 calendar days after each pressure release, except as provided in § 63.1005(d).

§ 63.1012 Compressor standards.

(a) *Compliance schedule.* The owner or operator shall comply with this section no later than the compliance dates specified in the referencing subpart.

(b) *Seal system standard.* Each compressor shall be equipped with a seal system that includes a barrier fluid system and that prevents leakage of process fluid to the atmosphere, except as provided in § 63.1002(b) and paragraphs (e) and (f) of this section. Each compressor seal system shall meet the requirements specified in paragraphs (b)(1), (b)(2), or (b)(3) of this section.

(1) Operated with the barrier fluid at a pressure that is greater than the compressor stuffing box pressure at all times (except during periods of startup, shutdown, or malfunction); or

(2) Equipped with a barrier fluid system degassing reservoir that is routed to a process or fuel gas system or connected by a closed-vent system to a control device that meets the requirements of § 63.1015; or

(3) Equipped with a closed-loop system that purges the barrier fluid directly into a process stream.

(c) *Barrier fluid system.* The barrier fluid shall not be in light liquid service. Each barrier fluid system shall be equipped with a sensor that will detect failure of the seal system, barrier fluid system, or both. Each sensor shall be observed daily or shall be equipped with an alarm unless the compressor is located within the boundary of an unmanned plant site.

(d) *Failure criterion and leak detection.* (1) The owner or operator shall determine, based on design considerations and operating experience, a criterion that indicates failure of the seal system, the barrier fluid system, or both. If the sensor indicates failure of the seal system, the barrier fluid system, or both based on the criterion, a leak is detected and shall be repaired pursuant to § 63.1005, as applicable.

(2) *Inaccessible, ceramic, or ceramic-lined connectors.* (i) Any connector that is inaccessible or that is ceramic or ceramic-lined (e.g., porcelain, glass, or glass-lined), is exempt from the monitoring requirements of paragraph (b) of this section, the leak repair requirements of paragraph (c) of this section, and the recordkeeping and reporting requirements of § 63.1017 and § 63.1018. An inaccessible connector is a connector that meets any of the provisions specified in paragraphs (d)(2)(i)(A) through (d)(2)(i)(F) of this section, as applicable.

(A) Buried;

(B) Insulated in a manner that prevents access to the connector by a monitor probe;

(C) Obstructed by equipment or piping that prevents access to the connector by a monitor probe; or

(D) Unable to be reached from a wheeled scissor-lift or hydraulic-type scaffold that would allow access to connectors up to 7.6 meters (25 feet) above the ground.

(E) Inaccessible because it would require elevating the monitoring personnel more than 2 meters (7 feet) above a permanent support surface or would require the erection of scaffold;

(F) Not able to be accessed at any time in a safe manner to perform monitoring. Unsafe access includes, but is not limited to, the use of a wheeled scissor-lift on unstable or uneven terrain, the use of a motorized man-lift basket in areas where an ignition potential exists, or access would require near proximity to hazards such as electrical lines, or would risk damage to equipment.

(ii) If any inaccessible ceramic or ceramic-lined connector is noted to have a leak by visual, audible, olfactory, or other means, the leak to the atmosphere shall be eliminated as soon as practical.

§ 63.1009 Agitators in gas and vapor service and in light liquid service standards.

(a) *Compliance schedule.* The owner or operator shall comply with this section no later than the compliance dates specified in the referencing subpart.

(b) *Leak detection.* (1) *Monitoring method.* Each agitator seal shall be monitored monthly to detect leaks by the methods specified in § 63.1004(b), or § 63.1016, except as provided in § 63.1002(b) or in paragraph (e) of this section.

(2) *Instrument reading that defines a leak.* If an instrument reading equivalent of 10,000 parts per million or greater is measured, a leak is detected.

(3) *Visual inspection.* Each agitator seal shall be checked by visual inspection each calendar week for indications of liquids dripping from the agitator seal. The owner or operator shall document that the inspection was conducted and the date of the inspection. If there are indications of liquids dripping from the agitator seal, the owner or operator shall follow the procedures specified in paragraphs (b)(3)(i) and (b)(3)(ii) of this section prior to the next required inspection.

(i) The owner or operator shall monitor the agitator seal as specified in § 63.1004(b) to determine if there is a leak of regulated material. If an instrument reading of 10,000 parts per million or greater is measured, a leak is detected, and it shall be repaired using the procedures in paragraph (d) of this section;

(ii) The owner or operator shall eliminate the indications of liquids dripping from the agitator seal.

(c) [Reserved]

(d) *Leak repair.* If a leak is detected, then the leak shall be repaired using the procedures in § 63.1005, as applicable.

(e) *Special provisions for agitators.* (1) *Dual mechanical seal.* Each agitator equipped with a dual mechanical seal system that includes a barrier fluid system is exempt from the requirements of paragraph (b) of this section, provided the requirements specified in paragraphs (e)(1)(i) through (e)(1)(vi) of this section are met.

(i) Each dual mechanical seal system shall meet the applicable requirement specified in paragraphs (e)(1)(i)(A), (e)(1)(i)(B), or (e)(1)(i)(C) of this section.

(A) Operated with the barrier fluid at a pressure that is at all times (except during periods of startup, shutdown, or malfunction) greater than the agitator stuffing box pressure; or

(B) Equipped with a barrier fluid degassing reservoir that is routed to a process or fuel gas system or connected by a closed vent system to a control device that meets the requirements of § 63.1015; or

(C) Equipped with a closed-loop system that purges the barrier fluid into a process stream.

(ii) The barrier fluid is not in light liquid service.

(iii) Each barrier fluid system is equipped with a sensor that will detect failure of the seal system, the barrier fluid system, or both.

(iv) Each agitator seal is checked by visual inspection each calendar week for indications of liquids dripping from the agitator seal. If there are indications of liquids dripping from the agitator seal at the time of the weekly inspection, the owner or operator shall follow the procedure specified in either paragraph (e)(1)(iv)(A) or (e)(1)(iv)(B) of this section prior to the next required inspection.

(A) The owner or operator shall monitor the agitator seal shall as specified in § 63.1004(b) to determine the presence of regulated material in the barrier fluid. If an instrument reading of 10,000 parts per million or greater is measured, a leak is detected and it shall be repaired using the procedures in § 63.1005; or

(B) The owner or operator shall eliminate the visual indications of liquids dripping.

(v) Each sensor as described in paragraph (e)(1)(iii) of this section is observed daily or is equipped with an alarm unless the agitator seal is located within the boundary of an unmanned plant site.

(vi) The owner or operator of each dual mechanical seal system shall meet the requirements specified in paragraphs (e)(1)(vi)(A) through (e)(1)(vi)(D).

(A) The owner or operator shall determine, based on design considerations and operating experience, criteria applicable to the presence and frequency of drips and to the sensor that indicates failure of the seal system, the barrier fluid system, or both.

(B) The owner or operator shall keep records of the design criteria and an explanation of the design criteria; and any changes to these criteria and the reasons for the changes.

(C) If indications of liquids dripping from the agitator seal exceed the criteria established in paragraphs (e)(1)(vi)(A) and (e)(1)(vi)(B) of this section, or if, based on the criteria established in paragraphs (e)(1)(vi)(A) and (e)(1)(vi)(B) of this section, the sensor indicates failure of the seal system, the barrier fluid system, or both, a leak is detected.

(D) When a leak is detected, it shall be repaired using the procedures in § 63.1005.

(2) *No external shaft.* Any agitator that is designed with no externally actuated shaft penetrating the agitator housing is exempt from the requirements of paragraph (b) of this section.

(3) *Routed to a process or fuel gas system or equipped with a closed vent system.* Any agitator that is routed to a process or fuel gas system or equipped with a closed vent system that captures and transports leakage from the agitator to a control device meeting the requirements of § 63.1015 is exempt from the monitoring requirements of paragraph (b) of this section.

(4) *Unmanned plant site.* Any agitator that is located within the boundary of an unmanned plant site is exempt from

the percent leaking pumps calculation for that one monitoring period only.

(3) Percent leaking pumps shall be determined by the following equation:

$$\%P_L = \left((P_L - P_S)/(P_T - P_S)\right) \times 100 \qquad \text{[Eq. 1]}$$

Where:

$\%P_L$ = Percent leaking pumps

P_L = Number of pumps found leaking as determined through monthly monitoring as required in paragraph (b) of this section. Do not include results from inspection of unsafe-to-monitor pumps pursuant to paragraph (e)(6) of this section.

P_T = Total pumps in regulated material service, including those meeting the criteria in paragraphs (e)(1), (e)(2), (e)(3), and (e)(6) of this section.

P_S = Number of pumps leaking within 1 month of start-up during the current monitoring period.

(d) *Leak repair.* If a leak is detected pursuant to paragraph (b) of this section, then the leak shall be repaired using the procedures in § 63.1005, as applicable, unless otherwise specified in paragraph (b)(4) of this section for leaks identified by visual indications of liquids dripping.

(e) *Special provisions for pumps.* (1) *Dual mechanical seal pumps.* Each pump equipped with a dual mechanical seal system that includes a barrier fluid system is exempt from the requirements of paragraph (b) of this section, provided the requirements specified in paragraphs (e)(1)(i) through (e)(1)(viii) of this section are met.

(i) The owner or operator determines, based on design considerations and operating experience, criteria applicable to the presence and frequency of drips and to the sensor that indicates failure of the seal system, the barrier fluid system, or both. The owner or operator shall keep records at the plant of the design criteria and an explanation of the design criteria, and any changes to these criteria and the reasons for the changes. This record must be available for review by an inspector.

(ii) Each dual mechanical seal system shall meet the requirements specified in paragraphs (e)(1)(ii)(A) through (e)(1)(ii)(C) of this section.

(A) Each dual mechanical seal system is operated with the barrier fluid at a pressure that is at all times (except periods of startup, shutdown, or malfunction) greater than the pump stuffing box pressure; or

(B) Equipped with a barrier fluid degassing reservoir that is routed to a process or fuel gas system or connected by a closed vent system to a control device that complies with the requirements of subpart SS of this part; or

(C) Equipped with a closed-loop system that purges the barrier fluid into a process stream.

(iii) The barrier fluid is not in light liquid service.

(iv) Each barrier fluid system is equipped with a sensor that will detect failure of the seal system, the barrier fluid system, or both.

(v) Each pump is checked by visual inspection each calendar week for indications of liquids dripping from the pump seal. The owner or operator shall document that the inspection was conducted and the date of the inspection. If there are indications of liquids dripping from the pump seal at the time of the weekly inspection, the owner or operator shall follow the procedure specified in either paragraph (e)(1)(v)(A) or (e)(1)(v)(B) of this section prior to the next required inspection.

(A) The owner or operator shall monitor the pump as specified in § 63.1004(b) to determine if there is a leak of regulated material in the barrier fluid; if an instrument reading of 10,000 parts per million or greater is measured, a leak is detected and shall be repaired using the procedures in § 63.1005; or

(B) The owner or operator shall eliminate the visual indications of liquids dripping.

(vi) If indications of liquids dripping from the pump seal exceed the criteria established in paragraph (e)(1)(i) of this section, or if based on the criteria established in paragraph (e)(1)(i) of this section the sensor indicates failure of the seal system, the barrier fluid system, or both, a leak is detected.

(vii) Each sensor as described in paragraph (e)(1)(iv) of this section is observed daily or is equipped with an alarm unless the pump is located within the boundary of an unmanned plant site.

(viii) When a leak is detected pursuant to paragraph (e)(1)(vi) of this section, it shall be repaired as specified in § 63.1005.

(2) *No external shaft.* Any pump that is designed with no externally actuated shaft penetrating the pump housing is exempt from the requirements of paragraph (b) of this section.

(3) *Routed to a process or fuel gas system or equipped with a closed vent system.* Any pump that is routed to a process or a fuel gas system or equipped with a closed vent system that captures and transports leakage from the pump to a control device meeting the requirements of § 63.1015 is exempt from requirements of paragraph (b) of this section.

(4) *Unmanned plant site.* Any pump that is located within the boundary of an unmanned plant site is exempt from the weekly visual inspection requirement of paragraphs (b)(3), and (e)(1)(v) of this section, and the daily requirements of paragraph (e)(1)(vii) of this section, provided that each pump is visually inspected as often as practical and at least monthly.

(5) *Unsafe-to-monitor pumps.* Any pump that is designated, as described in § 63.1003(c)(1), as an unsafe-to-monitor pump is exempt from the requirements of paragraph (b) of this section and the requirements of § 63.1005 and the owner or operator shall monitor the pump according to the written plan specified in § 63.1003(c)(5).

§ 63.1008 Connectors in gas and vapor service and in light liquid service standards.

(a) *Compliance schedule.* The owner or operator shall comply with this section no later than the compliance dates specified in the referencing subpart.

(b) *Leak detection.* Unless otherwise specified in § 63.1002(b), or § 63.1016 of this subpart, or the referencing subpart, the owner or operator shall monitor all connectors within 5 days by the method specified in § 63.1004(b) if evidence of a potential leak is found by visual, audible, olfactory, or any other detection method. No monitoring is required if the evidence of a potential leak is eliminated within 5 days. If an instrument reading of 10,000 parts per million or greater is measured, a leak is detected.

(c) *Leak repair.* If a leak is detected pursuant to paragraph (b) of this section, then the leak shall be repaired using the procedures in § 63.1005, as applicable.

(d) *Special provisions for connectors.* (1) *Unsafe-to-monitor connectors.* Any connector that is designated, as described in § 63.1003(c)(1), as an unsafe-to-monitor connector is exempt from the requirements of paragraph (b) of this section and the owner or operator shall monitor according to the written plan specified in § 63.1003(c)(5).

paragraph (c) of this section, an owner or operator may begin to monitor for leaks once every year.

(iii) If the percent of valves leaking is greater than 2.0, the owner or operator shall comply with paragraph (b)(3) of this section, but can elect to comply with paragraph (b)(6) of this section if future percent of valves leaking is again equal to or less than 2.0.

(iv) The owner or operator shall keep a record of the monitoring schedule and the percent of valves found leaking during each monitoring period.

(c) *Percent leaking valves calculation—calculation basis and procedures.* (1) The owner or operator shall decide no later than the compliance date of this subpart, or upon revision of an operating permit whether to calculate percent leaking valves on a process unit or group of process units basis. Once the owner or operator has decided, all subsequent percentage calculations shall be made on the same basis and this shall be the basis used for comparison with the subgrouping criteria specified in paragraph (b)(5)(i) of this section.

(2) The percent of valves leaking shall be determined by dividing the sum of valves found leaking during current monitoring and valves for which repair has been delayed by the total number of valves subject to the requirements of this section.

(d) *Leak repair.* (1) If a leak is determined pursuant to paragraph (b), (e)(1), or (e)(2) of this section, then the leak shall be repaired using the procedures in § 63.1005, as applicable.

(2) After a leak determined pursuant to paragraph (b) or (e)(2) of this section has been repaired, the valve shall be monitored at least once within the first 3 months after its repair. The monitoring required by this paragraph is in addition to the monitoring required to satisfy the definition of repair.

(i) The monitoring shall be conducted as specified in § 63.1004(b) and (c), as appropriate, to determine whether the valve has resumed leaking.

(ii) Periodic monitoring required by paragraph (b) of this section may be used to satisfy the requirements of this paragraph, if the timing of the monitoring period coincides with the time specified in this paragraph. Alternatively, other monitoring may be performed to satisfy the requirements of this paragraph, regardless of whether the timing of the monitoring period for periodic monitoring coincides with the time specified in this paragraph.

(iii) If a leak is detected by monitoring that is conducted pursuant to paragraph (d)(2) of this section, the owner or operator shall follow the provisions of paragraphs (d)(2)(iii)(A) and (d)(2)(iii)(B) of this section, to determine whether that valve must be counted as a leaking valve for purposes of paragraph (c) of this section.

(A) If the owner or operator elected to use periodic monitoring required by paragraph (b) of this section to satisfy the requirements of paragraph (d)(2) of this section, then the valve shall be counted as a leaking valve.

(B) If the owner or operator elected to use other monitoring, prior to the periodic monitoring required by paragraph (b) of this section, to satisfy the requirements of paragraph (d)(2) of this section, then the valve shall be counted as a leaking valve unless it is repaired and shown by periodic monitoring not to be leaking.

(e) *Special provisions for valves.* (1) *Unsafe-to-monitor valves.* Any valve that is designated, as described in § 63.1003(c)(1), as an unsafe-to-monitor valve, is exempt from the monitoring requirements of paragraph (b) of this section, and the owner or operator shall monitor the valve according to the written plan specified in § 63.1003(c)(5).

(2) *Difficult-to-monitor.* Any valve that is designated, as described in § 63.1003(c)(2), as a difficult-to-monitor valve, is exempt from the requirements of paragraph (b) of this section, and the owner or operator shall monitor the valve according to the written plan specified in § 63.1003(c)(5).

(3) *Less than 250 valves.* Any equipment located at a plant site with fewer than 250 valves in regulated material service is exempt from the monthly monitoring specified in paragraph (b)(3)(i) of this section. Instead, the owner or operator shall monitor each valve in regulated material service for leaks once each quarter, or comply with paragraphs (b)(3)(ii)(A), (b)(3)(ii)(B), or (b)(3)(ii)(C) of this section except as provided in paragraphs (e)(1) and (e)(2) of this section.

(4) *No detectable emissions.* (i) Any valve that is designated, as described in § 63.1003(e), as having no detectable emissions is exempt from the requirements of paragraphs (b) through (c) of this section if the owner or operator meets the criteria specified in paragraphs (e)(4)(i)(A) and (e)(4)(i)(B) of this section.

(A) Tests the valve for operation with emissions less than 500 parts per million above background as determined by the method specified in § 63.1004(c) initially upon designation, annually, and at other times requested by the Administrator, and

(B) Records the dates of each compliance demonstration, the background level measured during each compliance test, and the maximum instrument reading measured at the equipment during each compliance test.

(ii) A valve may not be designated or operated for no detectable emissions, as described in § 63.1003(e), if the valve has an instrument reading greater than 500 parts per million above background.

§ 63.1007 Pumps in light liquid service standards.

(a) *Compliance schedule.* The owner or operator shall comply with this section no later than the compliance date specified in the referencing subpart.

(b) *Leak detection.* Unless otherwise specified in § 63.1002(b), or § 63.1016 of this subpart or paragraph (e) of this section, the owner or operator shall monitor each pump monthly to detect leaks and shall comply with all other provisions of this section.

(1) *Monitoring method.* The pumps shall be monitored to detect leaks by the method specified in § 63.1004(b) of this subpart.

(2) *Instrument reading that defines a leak.* The instrument reading that defines a leak is 10,000 parts per million.

(3) *Visual inspection.* Each pump shall be checked by visual inspection each calendar week for indications of liquids dripping from the pump seal. The owner or operator shall document that the inspection was conducted and the date of the inspection. If there are indications of liquids dripping from the pump seal, a leak is detected. Unless the owner or operator demonstrates (e.g., through instrument monitoring) that the indications of liquids dripping are due to a condition other than process fluid drips, the leak shall be repaired according to the procedures of paragraph (b)(4) of this section.

(4) *Visual inspection: Leak repair.* Where a leak is identified by visual indications of liquids dripping, repair shall mean that the visual indications of liquids dripping have been eliminated.

(c) *Percent leaking pumps calculation.* (1) The owner or operator shall decide no later than the compliance date of this part or upon revision of an operating permit whether to calculate percent leaking pumps on a process unit basis or group of process units basis. Once the owner or operator has decided, all subsequent percentage calculations shall be made on the same basis.

(2) The number of pumps at a process unit shall be the sum of all the pumps in regulated material service, except that pumps found leaking in a continuous process unit or within 1 month after startup of the pump shall not count in

(C) A system that routes emissions to a process or a fuel gas system or a closed vent system and control device that meets the requirements of § 63.1007(e)(3) will be installed.

(ii) Repair is to be completed as soon as practical, but not later than 6 months after the leak was detected.

(5) Delay of repair beyond a process unit or affected facility shutdown will be allowed for a valve if valve assembly replacement is necessary during the process unit or affected facility shutdown, and valve assembly supplies have been depleted, and valve assembly supplies had been sufficiently stocked before the supplies were depleted. Delay of repair beyond the second process unit or affected facility shutdown will not be allowed unless the third process unit or affected facility shutdown occurs sooner than 6 months after the first process unit or affected facility shutdown.

(d) *Unsafe-to-repair-connectors.* Any connector that is designated, as described in § 63.1003(d), as an unsafe-to-repair connector is exempt from the requirements of § 63.1008(b), and paragraph (a) of this section.

(e) *Leak repair records.* For each leak detected, the information specified in paragraphs (e)(1) through (e)(5) of this section shall be recorded and maintained pursuant to the referencing subpart.

(1) The date of first attempt to repair the leak.

(2) The date of successful repair of the leak.

(3) Maximum instrument reading measured by Method 21 of 40 CFR part 60, appendix A at the time the leak is successfully repaired or determined to be nonrepairable.

(4) "Repair delayed" and the reason for the delay if a leak is not repaired within 15 calendar days after discovery of the leak as specified in paragraphs (e)(4)(i) and (e)(4)(ii) of this section.

(i) The owner or operator may develop a written procedure that identifies the conditions that justify a delay of repair. The written procedures may be included as part of the startup, shutdown, and malfunction plan, as required by the referencing subpart for the source, or may be part of a separate document that is maintained at the plant site. In such cases, reasons for delay of repair may be documented by citing the relevant sections of the written procedure.

(ii) If delay of repair was caused by depletion of stocked parts, there must be documentation that the spare parts were sufficiently stocked on site before depletion and the reason for depletion.

(5) Dates of process unit or affected facility shutdowns that occur while the equipment is unrepaired.

§ 63.1006 Valves in gas and vapor service and in light liquid service standards.

(a) *Compliance schedule.* (1) The owner or operator shall comply with this section no later than the compliance dates specified in the referencing subpart.

(2) The use of monitoring data generated before the regulated source became subject to the referencing subpart to initially qualify for less frequent monitoring is governed by the provisions of § 63.1004(b)(6).

(b) *Leak detection.* Unless otherwise specified in § 63.1002(b), or § 63.1016, or in paragraph (e) of this section, or the referencing subpart, the owner or operator shall monitor all valves at the intervals specified in paragraphs (b)(3) through (b)(6) of this section and shall comply with all other provisions of this section.

(1) *Monitoring method.* The valves shall be monitored to detect leaks by the method specified in § 63.1004(b) and (c).

(2) *Instrument reading that defines a leak.* The instrument reading that defines a leak is 10,000 parts per million or greater.

(3) *Monitoring period.* (i) Each valve shall be monitored monthly to detect leaks, except as provided in paragraphs (b)(3)(ii), (e)(1), (e)(2), and (e)(4) of this section. An owner or operator may otherwise elect to comply with one of the alternative standards in paragraphs (b)(5) or (b)(6) of this section as specified in paragraph (b)(4) of this section.

(ii)(A) Any valve for which a leak is not detected for 2 successive months may be monitored the same month (first, second, or third month) of every quarter, beginning with the next quarter, until a leak is detected. The first quarterly monitoring shall occur less than 3 months following the last monthly monitoring.

(B) If a leak is detected, the valve shall be monitored monthly until a leak is not detected for 2 successive months.

(C) For purposes of paragraph (b) of this section, quarter means a 3-month period with the first quarter concluding on the last day of the last full month during the 180 days following initial startup.

(4) *Allowance of alternative standards.* An owner or operator may elect to comply with one of the alternatives specified in either paragraph (b)(5) or (b)(6) of this section if the percentage of valves leaking is equal to or less than 2.0 percent as determined by the procedure in paragraph (c) of this section. An owner or operator must notify the Administrator before implementing one of the alternatives specified in either paragraph (b)(5) or (b)(6) of this section.

(5) *Allowable percentage alternative.* An owner or operator choosing to comply with the allowable percentage alternative shall have an allowable percentage of leakers no greater than 2.0 percent for each affected facility or process unit and shall comply with paragraphs (b)(5)(i) and (b)(5)(ii) of this section.

(i) A compliance demonstration for each affected facility or process unit or affected facility complying with this alternative shall be conducted initially upon designation, annually, and at other times requested by the Administrator. For each such demonstration, all valves in gas and vapor and light liquid service within the affected facility or process unit shall be monitored within 1 week by the methods specified in § 63.1004(b). If an instrument reading exceeds the equipment leak level specified in the referencing subpart, a leak is detected. The leak percentage shall be calculated as specified in paragraph (c) of this section.

(ii) If an owner or operator decides no longer to comply with this alternative, the owner or operator must notify the Administrator in writing that the work practice standard described in paragraph (b)(3) of this section will be followed.

(6) *Skip period alternatives.* An owner or operator may elect to comply with one of the alternative work practices specified in paragraphs (b)(6)(i) or (b)(6)(ii) of this section. An owner or operator electing to use one of these skip period alternatives shall comply with paragraphs (b)(6)(iii) and (b)(6)(iv) of this section. Before using either skip period alternative, the owner or operator shall initially comply with the requirements of paragraph (b)(3) of this section. Monitoring data generated before the regulated source became subject to the referencing subpart that meets the criteria of either § 63.1004(b)(1) through (b)(5), or § 63.1004(b)(6), may be used to initially qualify for skip period alternatives.

(i) After 2 consecutive quarterly leak detection periods with the percent of valves leaking equal to or less than 2.0 as determined by the procedure in paragraph (c) of this section, an owner or operator may begin to monitor for leaks once every 6 months.

(ii) After 5 consecutive quarterly leak detection periods with the percent of valves leaking equal to or less than 2.0 as determined by the procedure in

approximately, but less than, 10,000 parts per million. A calibration gas other than methane in air or n-hexane in air may be used if the instrument does not respond to methane or n-hexane or if the instrument does not meet the performance criteria specified in paragraph (b)(2)(i) of this section. In such cases, the calibration gas may be a mixture of one or more compounds to be measured in air.

(5) *Monitoring performance.* Monitoring shall be performed when the equipment is in regulated material service or is in use with any other detectable material.

(6) *Monitoring data.* Monitoring data obtained prior to the regulated source becoming subject to the referencing subpart that do not meet the criteria specified in paragraphs (b)(1) through (b)(5) of this section may still be used to initially qualify for less frequent monitoring under the provisions in § 63.1006(a)(2), (b)(3) or (b)(4) for valves provided the departures from the criteria specified or from the specified monitoring frequency of § 63.1006(b)(3) are minor and do not significantly affect the quality of the data. Examples of minor departures are monitoring at a slightly different frequency (such as every six weeks instead of monthly or quarterly), following the performance criteria of section 3.1.2(a) of Method 21 of Appendix A of 40 CFR part 60 instead of paragraph (b)(2) of this section, or monitoring at a different leak definition if the data would indicate the presence or absence of a leak at the concentration specified in the referencing subpart. Failure to use a calibrated instrument is not considered a minor departure.

(c) *Instrument monitoring using background adjustments.* The owner or operator may elect to adjust or not to adjust the instrument readings for background. If an owner or operator elects not to adjust instrument readings for background, the owner or operator shall monitor the equipment according to the procedures specified in paragraphs (b)(1) through (b)(4) of this section. In such case, all instrument readings shall be compared directly to the applicable leak definition for the monitored equipment to determine whether there is a leak or to determine compliance with § 63.1011(b) (pressure relief devices in gas and vapor service) or § 63.1012(f) (compressors). If an owner or operator elects to adjust instrument readings for background, the owner or operator shall monitor the equipment according to the procedures specified in paragraphs (c)(1) through (c)(4) of this section.

(1) The requirements of paragraphs (b)(1) through (b)(4) of this section shall apply.

(2) The background level shall be determined, using the procedures in Method 21 of 40 CFR part 60, appendix A.

(3) The instrument probe shall be traversed around all potential leak interfaces as close to the interface as possible (as described in Method 21 of 40 CFR part 60, appendix A).

(4) The arithmetic difference between the maximum concentration indicated by the instrument and the background level shall be compared to the applicable leak definitions for the monitored equipment to determine whether there is a leak or to determine compliance with § 63.1011(b) (pressure relief devices in gas and vapor service) or § 63.1012(f) (compressors).

(d) *Sensory monitoring methods.* Sensory monitoring, as required under this subpart, shall consist of detection of a potential leak to the atmosphere by visual, audible, olfactory, or any other detection method.

(e) *Leaking equipment identification and records.* (1) When each leak is detected pursuant to the monitoring specified in paragraph (a) of this section, a weatherproof and readily visible identification, marked with the equipment identification, shall be attached to the leaking equipment.

(2) When each leak is detected, the information specified in § 63.1005(e) shall be recorded and kept pursuant to the referencing subpart.

§ 63.1005 Leak repair.

(a) *Leak repair schedule.* The owner or operator shall repair each leak detected no later than 15 calendar days after it is detected, except as provided in paragraphs (c) and (d) of this section. A first attempt at repair shall be made no later than 5 calendar days after the leak is detected. First attempt at repair for pumps includes, but is not limited to, tightening the packing gland nuts and/or ensuring that the seal flush is operating at design pressure and temperature. First attempt at repair for valves includes, but is not limited to, tightening the bonnet bolts, and/or replacing the bonnet bolts, and/or tightening the packing gland nuts, and/or injecting lubricant into the lubricated packing.

(b) *Leak identification removal.* (1) *Valves in gas/vapor and light liquid service.* The leak identification on a valve in gas/vapor or light liquid service may be removed after it has been monitored as specified in § 63.1006(b), and no leak has been detected during that monitoring. The leak identification on a connector in gas/vapor or light liquid service may be removed after it has been monitored as specified in § 63.1008(b) and no leak has been detected during that monitoring.

(2) *Other equipment.* The identification that has been placed, pursuant to § 63.1004(e), on equipment determined to have a leak, except for a valve in gas/vapor or light liquid service, may be removed after it is repaired.

(c) *Delay of repair.* Delay of repair can be used as specified in any of paragraphs (c)(1) through (c)(5) of this section. The owner or operator shall maintain a record of the facts that explain any delay of repairs and, where appropriate, why the repair was technically infeasible without a process unit shutdown.

(1) Delay of repair of equipment for which leaks have been detected is allowed if the repair is technically infeasible without a process unit or affected facility shutdown within 15 days after a leak is detected. Repair of this equipment shall occur as soon as practical, but not later than by the end of the next process unit or affected facility shutdown, except as provided in paragraph (c)(5) of this section.

(2) Delay of repair of equipment for which leaks have been detected is allowed for equipment that is isolated from the process and that does not remain in regulated material service.

(3) Delay of repair for valves, connectors, and agitators is also allowed if the criteria specified in paragraphs (c)(3)(i) and (c)(3)(ii) are met.

(i) The owner or operator determines that emissions of purged material resulting from immediate repair would be greater than the fugitive emissions likely to result from delay of repair, and

(ii) When repair procedures are effected, the purged material is collected and destroyed, or recovered in a control or recovery device, or routed to a fuel gas system or process complying with § 63.1015 or § 63.1002(b) of this part.

(4) Delay of repair for pumps is allowed if the criteria specified in paragraphs (c)(4)(i) and (c)(4)(ii) are met.

(i) Repair requires replacing the existing seal design with a new system that the owner or operator has determined will provide better performance or one of the specifications of paragraphs (c)(4)(i)(A) through (c)(4)(i)(C) of this section are met.

(A) A dual mechanical seal system that meets the requirements of § 63.1007(e)(1) will be installed,

(B) A pump that meets the requirements of § 63.1007(e)(2) will be installed; or

(2) *Designation and criteria for difficult-to-monitor.* Valves meeting the provisions of § 63.1006(e)(2) of this subpart may be designated difficult-to-monitor if the provisions of paragraph (c)(2)(i) of this section apply. Agitators meeting the provisions of § 63.1009(f)(5) may be designated difficult-to-monitor if the provisions of paragraph (c)(2)(ii) apply.

(i) *Valves.* (A) The owner or operator of the valve determines that the equipment cannot be monitored without elevating the monitoring personnel more than 2 meters (7 feet) above a support surface or it is not accessible in a safe manner when it is in regulated material service.

(B) The process unit or affected facility within which the valve is located is an existing source, or the owner or operator designates less than 3 percent of the total number of valves in a new source as difficult-to-monitor.

(ii) *Agitators.* The owner or operator determines that the agitator cannot be monitored without elevating the monitoring personnel more than 2 meters (7 feet) above a support surface or it is not accessible in a safe manner when it is in regulated material service.

(3) [Reserved]

(4) *Identification of unsafe or difficult-to-monitor equipment.* The owner or operator shall record the identity of equipment designated as unsafe-to-monitor according to the provisions of paragraph (c)(1) of this section and the planned schedule for monitoring this equipment. The owner or operator shall record the identity of equipment designated as difficult-to-monitor according to the provisions of paragraph (c)(2) of this section, the planned schedule for monitoring this equipment, and an explanation why the equipment is difficult-to-monitor. This record must be kept at the plant and be available for review by an inspector.

(5) *Written plan requirements.* (i) The owner or operator of equipment designated as unsafe-to-monitor except connectors meeting the provisions of § 63.1008(d)(1) according to the provisions of paragraph (c)(1)(i) of this section shall have a written plan that requires monitoring of the equipment as frequently as practical during safe-to-monitor times, but not more frequently than the periodic monitoring schedule otherwise applicable, and repair of the equipment according to the procedures in § 63.1005 if a leak is detected.

(ii) The owner or operator of equipment designated as difficult-to-monitor according to the provisions of paragraph (c)(2) of this section shall have a written plan that requires monitoring of the equipment at least once per calendar year, and repair of the equipment according to the procedures in § 63.1005 if a leak is detected.

(d) *Special equipment designations: Unsafe-to-repair.* (1) *Designation and criteria.* Connectors subject to the provisions of § 63.1005(e) may be considered unsafe-to-repair if the owner or operator determines that repair personnel would be exposed to an immediate danger as a consequence of complying with the repair requirements of this subpart, and if the connector will be repaired before the end of the next process unit or affected facility shutdown as specified in § 63.1005(e) of this subpart.

(2) *Identification of equipment.* The identity of connectors designated as unsafe-to-repair and an explanation why the connector is unsafe-to-repair shall be recorded.

(e) *Special equipment designations: Equipment operating with no detectable emissions.* (1) *Designation and criteria.* Equipment may be designated as having no detectable emissions if it has no external actuating mechanism in contact with the process fluid, and is operated with emissions less than 500 parts per million above background as determined by the method specified in §§ 63.1004(b) and (c).

(2) *Identification of equipment.* The identity of equipment designated as no detectable emissions shall be recorded.

(3) *Identification of compressors operating under no detectable emissions.* Identify the compressors that the owner or operator elects to designate as operating with an instrument reading of less than 500 parts per million above background, under the provisions of § 63.1012(f).

§ 63.1004 Instrument and sensory monitoring for leaks.

(a) *Monitoring for leaks.* The owner or operator of a regulated source subject to this subpart shall monitor all regulated equipment as specified in paragraph (a)(1) of this section for instrument monitoring and paragraph (a)(2) of this section for sensory monitoring.

(1) *Instrument monitoring for leaks.* (i) Valves in gas and vapor service and in light liquid service shall be monitored pursuant to § 63.1006(b).

(ii) Pumps in light liquid service shall be monitored pursuant to § 63.1007(b).

(iii) Connectors in gas and vapor service and in light liquid service shall be monitored pursuant to § 63.1008(b).

(iv) Agitators in gas and vapor service and in light liquid service shall be monitored pursuant to § 63.1009(b).

(v) Pressure relief devices in gas and vapor service shall be monitored pursuant to § 63.1011(c).

(vi) Compressors designated to operate with an instrument reading less than 500 parts per million as described in § 63.1003(e), shall be monitored pursuant to § 63.1012(f).

(2) *Sensory monitoring for leaks.* (i) Pumps in light liquid service shall be observed pursuant to § 63.1007(b)(3) and (e)(1)(v).

(ii) [Reserved]

(iii) Agitators in gas and vapor service and in light liquid service shall be observed pursuant to § 63.1009(b)(3) or (e)(1)(iv).

(iv) [Reserved]

(b) *Instrument monitoring methods.* Instrument monitoring, as required under this subpart, shall comply with the requirements specified in paragraphs (b)(1) through (b)(6) of this section.

(1) *Monitoring method.* Monitoring shall comply with Method 21 of 40 CFR part 60, appendix A.

(2) *Detection instrument performance criteria.* (i) Except as provided for in paragraph (b)(2)(ii) of this section, the detection instrument shall meet the performance criteria of Method 21 of 40 CFR part 60, appendix A, except the instrument response factor criteria in section 3.1.2(a) of Method 21 shall be for the representative composition of the process fluid, and not for each individual HAP, VOC or other regulated material individual chemical compound in the stream. For process streams that contain nitrogen, air, water, or other inerts that are not regulated materials, the representative stream response factor shall be calculated on an inert-free basis. The response factor may be determined at any concentration for which monitoring for leaks will be conducted.

(ii) If there is no instrument commercially available that will meet the performance criteria specified in paragraph (b)(2)(i) of this section, the instrument readings may be adjusted by multiplying by the representative response factor of the process fluid, calculated on an inert-free basis as described in paragraph (b)(2)(i) of this section.

(3) *Detection instrument calibration procedure.* The detection instrument shall be calibrated before use on each day of its use by the procedures specified in Method 21 of 40 CFR part 60, appendix A.

(4) *Detection instrument calibration gas.* Calibration gases shall be zero air (less than 10 parts per million of hydrocarbon in air); and a mixture of methane in air at a concentration of approximately, but less than, 10,000 parts per million; or a mixture of n-hexane in air at a concentration of

fitting requires only two pieces to make the connection (*i.e.*, the pipe and the fitting).

Sensor means a device that measures a physical quantity or the change in a physical quantity, such as temperature, pressure, flow rate, pH, or liquid level.

Set pressure means the pressure at which a properly operating pressure relief device begins to open to relieve atypical process system operating pressure.

Start-up means the setting into operation of a piece of equipment or a control device that is subject to this subpart.

§ 63.1002 Compliance determination.

(a) *General procedures for compliance determination.* Compliance with this subpart will be determined by review of the records required by § 63.1017 and the reports required by § 63.1018, by review of performance test results, and by inspections.

(b) *Alternative means of emission limitation.* The provisions of paragraph (b) of this section do not apply to the performance standards of § 63.1001(b) for pressure relief devices, § 63.1006(e)(4) for valves designated as having no detectable emissions or § 63.1012(f) for compressors operating under the alternative compressor standard.

(1) An owner or operator may request a determination of alternative means of emission limitation to the requirements of §§ 63.1005 through 63.1015 as provided in paragraphs (b)(2) through (b)(6) of this section. If the Administrator makes a determination that an alternative means of emission limitation is a permissible alternative, the owner or operator shall comply with the alternative.

(2) Permission to use an alternative means of emission limitation shall be governed by the following procedures in paragraphs (b)(3) through (b)(6) of this section.

(3) Where the standard is an equipment, design, or operational requirement the criteria specified in paragraphs (b)(3)(i) and (b)(3)(ii) shall be met.

(i) Each owner or operator applying for permission to use an alternative means of emission limitation shall be responsible for collecting and verifying emission performance test data for an alternative means of emission limitation.

(ii) The Administrator will compare test data for the means of emission limitation to test data for the equipment, design, and operational requirements.

(4) Where the standard is a work practice the criteria specified in paragraphs (b)(4)(i) through (b)(4)(iv) shall be met.

(i) Each owner or operator applying for permission shall be responsible for collecting and verifying test data for an alternative means of emission limitation.

(ii) For each kind of equipment for which permission is requested, the emission reduction achieved by the alternative means of emission limitation shall be demonstrated.

(iii) The Administrator will compare the demonstrated emission reduction for the alternative means of emission limitation to the demonstrated emission reduction for the required work practices.

(iv) The Administrator may condition the permission on requirements that may be necessary to ensure operation and maintenance to achieve the same or greater emission reduction as the required work practices of this subpart.

(5) An owner or operator may offer a unique approach to demonstrate the alternative means of emission limitation.

(6) If, in the judgement of the Administrator, an alternative means of emission limitation will be approved, the Administrator will publish a notice of the determination in the **Federal Register**.

(7)(i) Manufacturers of equipment used to control equipment leaks of a regulated material may apply to the Administrator for permission for an alternative means of emission limitation that achieves a reduction in emissions of the regulated material achieved by the equipment, design, and operational requirements of this subpart.

(ii) The Administrator will grant permission according to the provisions of paragraphs (b)(3), (b)(4), (b)(5) and (b)(6) of this section.

§ 63.1003 Equipment identification.

(a) *General equipment identification.* Equipment subject to this subpart shall be identified. Identification of the equipment does not require physical tagging of the equipment. For example, the equipment may be identified on a plant site plan, in log entries, by designation of process unit or affected facility boundaries by some form of weatherproof identification, or by other appropriate methods.

(b) *Additional equipment identification.* In addition to the general identification required by paragraph (a) of this section, equipment subject to any of the provisions in §§ 63.1006 to 63.1015 shall be specifically identified as required in paragraphs (b)(1) through (b)(5) of this section, as applicable.

(1) *Connectors.* Except for inaccessible, ceramic, or ceramic-lined connectors meeting the provisions of § 63.1008(d)(2) and instrumentation systems identified pursuant to paragraph (b)(4) of this section, identify the connectors subject to the requirements of this subpart. Connectors need not be individually identified if all connectors in a designated area or length of pipe subject to the provisions of this subpart are identified as a group, and the number of connectors subject is indicated.

(2) *Routed to a process or fuel gas system or equipped with a closed vent system and control device.* Identify the equipment that the owner or operator elects to route to a process or fuel gas system or equip with a closed vent system and control device, under the provisions of § 63.1007(e)(3) (pumps in light liquid service), § 63.1009(e)(3) (agitators in gas and vapor service and in light liquid service), § 63.1011(d) (pressure relief devices in gas and vapor service), § 63.1012(e) (compressors), or § 63.1016 (alternative means of emission limitation for enclosed vented process units) of this subpart.

(3) *Pressure relief devices.* Identify the pressure relief devices equipped with rupture disks, under the provisions of § 63.1011(e) of this subpart.

(4) *Instrumentation systems.* Identify instrumentation systems subject to the provisions of § 63.1010 of this subpart. Individual components in an instrumentation system need not be identified.

(5) *Equipment in service less than 300 hours per calendar year.* The identity, either by list, location (area or group), or other method, of equipment in regulated material service less than 300 hours per calendar year within a process unit or affected facilities subject to the provisions of this subpart shall be recorded.

(c) *Special equipment designations: Equipment that is unsafe or difficult-to-monitor.* (1) *Designation and criteria for unsafe-to-monitor.* Valves meeting the provisions of § 63.1006(e)(1), pumps meeting the provisions of § 63.1007(e)(5), connectors meeting the provisions of § 63.1008(d)(1), and agitators meeting the provisions of § 63.1009(e)(7) may be designated unsafe-to-monitor if the owner or operator determines that monitoring personnel would be exposed to an immediate danger as a consequence of complying with the monitoring requirements of this subpart. Examples of an unsafe-to-monitor equipment include, but is not limited to, equipment under extreme pressure or heat.

determine that a piece of equipment is not in organic HAP service.

In regulated material service means, for the purposes of this subpart, equipment which meets the definition of "in VOC service", "in VHAP service", "in organic hazardous air pollutant service," or "in other chemicals or groups of chemicals service" as defined in the referencing subpart.

In-situ sampling systems means nonextractive samplers or in-line samplers.

In vacuum service means that equipment is operating at an internal pressure which is at least 5 kilopascals below ambient pressure.

Initial startup means for new sources, the first time the source begins production. For additions or changes not defined as a new source by this subpart, initial startup means the first time additional or changed equipment is put into operation. Initial startup does not include operation solely for testing of equipment. Initial startup does not include subsequent startup of process units following malfunction or process unit shutdowns. Except for equipment leaks, initial startup also does not include subsequent startups (of process units following changes in product for flexible operation units or following recharging of equipment in batch unit operations).

Instrumentation system means a group of equipment components used to condition and convey a sample of the process fluid to analyzers and instruments for the purpose of determining process operating conditions (*e.g.*, composition, pressure, flow, etc.). Valves and connectors are the predominant type of equipment used in instrumentation systems; however, other types of equipment may also be included in these systems. Only valves nominally 1.27 centimeters (0.5 inches) and smaller, and connectors nominally 1.91 centimeters (0.75 inches) and smaller in diameter are considered instrumentation systems for the purposes of this subpart. Valves greater than nominally 1.27 centimeters (0.5 inches) and connectors greater than nominally 1.91 centimeters (0.75 inches) associated with instrumentation systems are not considered part of instrumentation systems and must be monitored individually.

Liquids dripping means any visible leakage from the seal including dripping, spraying, misting, clouding, and ice formation. Indications of liquids dripping include puddling or new stains that are indicative of an existing evaporated drip.

Nonrepairable means that it is technically infeasible to repair a piece of equipment from which a leak has been detected without a process unit or affected facility shutdown.

Open-ended valve or line means any valve, except relief valves, having one side of the valve seat in contact with process fluid and one side open to atmosphere, either directly or through open piping.

Organic monitoring device means a unit of equipment used to indicate the concentration level of organic compounds based on a detection principle such as infra-red, photo ionization, or thermal conductivity.

Pressure release means the emission of materials resulting from the system pressure being greater than the set pressure of the relief device. This release can be one release or a series of releases over a short time period due to a malfunction in the process.

Pressure relief device or valve means a safety device used to prevent operating pressures from exceeding the maximum allowable working pressure of the process equipment. A common pressure relief device is a spring-loaded pressure relief valve. Devices that are actuated either by a pressure of less than or equal to 2.5 pounds per square inch gauge or by a vacuum are not pressure relief devices.

Process unit means the equipment specified in the definitions of process unit in the applicable referencing subpart. If the referencing subpart does not define process unit, then for the purposes of this part, process unit means the equipment assembled and connected by pipes or ducts to process raw materials and to manufacture an intended product.

Process unit shutdown means a work practice or operational procedure that stops production from a process unit, or part of a process unit during which it is technically feasible to clear process material from a process unit, or part of a process unit, consistent with safety constraints and during which repairs can be affected. The following are not considered process unit shutdowns:

(1) An unscheduled work practice or operations procedure that stops production from a process unit, or part of a process unit, for less than 24 hours.

(2) An unscheduled work practice or operations procedure that would stop production from a process unit, or part of a process unit, for a shorter period of time than would be required to clear the process unit, or part of the process unit, of materials and start up the unit, and would result in greater emissions than delay of repair of leaking components until the next scheduled process unit shutdown.

(3) The use of spare equipment and technically feasible bypassing of equipment without stopping production.

Referencing subpart means the subpart which refers an owner or operator to this subpart.

Regulated material, for purposes of this subpart, refers to gases from volatile organic liquids (VOL), volatile organic compounds (VOC), hazardous air pollutants (HAP), or other chemicals or groups of chemicals that are regulated by the referencing subpart.

Regulated source for the purposes of this subpart, means the stationary source, the group of stationary sources, or the portion of a stationary source that is regulated by a referencing subpart.

Relief device or valve means a valve used only to release an unplanned, nonroutine discharge. A relief valve discharge can result from an operator error, a malfunction such as a power failure or equipment failure, or other unexpected cause that requires immediate venting of gas from process equipment in order to avoid safety hazards or equipment damage.

Repaired, for the purposes of this subpart means the following:

(1) Equipment is adjusted, or otherwise altered, to eliminate a leak as defined in the applicable sections of this subpart, and

(2) Equipment, unless otherwise specified in applicable provisions of this subpart, is monitored as specified in § 63.1004(b) and, as applicable in §§ 63.1004(c) and 63.1015 of this part as appropriate, to verify that emissions from the equipment are below the applicable leak definition.

Routed to a process or route to a process means the emissions are conveyed to any enclosed portion of a process unit where the emissions are predominantly recycled and/or consumed in the same manner as a material that fulfills the same function in the process and/or transformed by chemical reaction into materials that are not regulated materials and/or incorporated into a product; and /or recovered.

Sampling connection system means an assembly of equipment within a process unit or affected facility used during periods of representative operation to take samples of the process fluid. Equipment used to take nonroutine grab samples is not considered a sampling connection system.

Screwed (threaded) connector means a threaded pipe fitting where the threads are cut on the pipe wall and the

63.1005 Leak repair.
63.1006 Valves in gas and vapor service and in light liquid service standards.
63.1007 Pumps in light liquid service standards.
63.1008 Connectors in gas and vapor service and in light liquid service standards.
63.1009 Agitators in gas and vapor service and in light liquid service standards.
63.1010 Pumps, valves, connectors, and agitators in heavy liquid service; pressure relief devices in liquid service; and instrumentation systems standards.
63.1011 Pressure relief devices in gas and vapor service standards.
63.1012 Compressor standards.
63.1013 Sampling connection systems standards.
63.1014 Open-ended valves or lines standards.
63.1015 Closed vent systems and control devices; or emissions routed to a fuel gas system or process standards.
63.1016 Alternative means of emission limitation: Enclosed-vented process units.
63.1017 Recordkeeping requirements.
63.1018 Reporting requirements.

Subpart TT—National Emission Standards for Equipment Leaks—Control Level 1

§ 63.1000 Applicability.

(a) The provisions of this subpart apply to the control of air emissions from equipment leaks for which another subpart references the use of this subpart for such air emission control. These air emission standards for equipment leaks are placed here for administrative convenience and only apply to those owners and operators of facilities subject to the referencing subpart. The provisions of 40 CFR part 63 subpart A (General Provisions) do not apply to this subpart except as noted in the referencing subpart.

(b) [Reserved]

(c) *Exemptions.* Paragraphs (c)(1) through (c)(3) delineate equipment that is excluded from the requirements of this subpart.

(1) *Equipment in vacuum service.* Equipment that is in vacuum service is excluded from the requirements of this subpart.

(2) *Equipment in service less than 300 hours per calendar year.* Equipment that is in regulated material service less than 300 hours per calendar year is excluded from the requirements of §§ 63.1006 through 63.1015 of this subpart if it is identified as required in paragraph (c)(2)(ii) of this section.

(3) *Lines and equipment not containing process fluids.* Except as provided in a referencing subpart, lines and equipment not containing process fluids are not subject to the provisions of this subpart. Utilities, and other nonprocess lines, such as heating and cooling systems which do not combine their materials with those in the processes they serve, are not considered to be part of a process unit or affected facility.

§ 63.1001 Definitions.

All terms used in this part shall have the meaning given them in the Act and in this section.

Closed-loop system means an enclosed system that returns process fluid to the process and is not vented directly to the atmosphere.

Closed-purge system means a system or combination of systems and portable containers to capture purged liquids. Containers must be covered or closed when not being filled or emptied.

Closed-vent system means a system that is not open to the atmosphere and is composed of piping, ductwork, connections, and, if necessary, flow inducing devices that transport gas or vapor from an emission point to a control device.

Combustion device means an individual unit of equipment, such as a flare, incinerator, process heater, or boiler, used for the combustion of organic emissions.

Connector means flanged, screwed, or other joined fittings used to connect two pipelines or a pipeline and a piece of equipment. A common connector is a flange. Joined fittings welded completely around the circumference of the interface are not considered connectors for the purpose of this regulation. For the purpose of reporting and recordkeeping, connector means joined fittings that are not inaccessible, ceramic, or ceramic-lined (*e.g.*, porcelain, glass, or glass-lined) as described in § 63.1008(d)(2) of this subpart.

Control device means any combustion device, recovery device, recapture device, or any combination of these devices used to comply with this part. Such equipment or devices include, but are not limited to, absorbers, carbon adsorbers, condensers, incinerators, flares, boilers, and process heaters. Primary condensers on steam strippers or fuel gas systems are not considered control devices.

Distance piece means an open or enclosed casing through which the piston rod travels, separating the compressor cylinder from the crankcase.

Double block and bleed system means two block valves connected in series with a bleed valve or line that can vent the line between the two block valves.

Equipment means each pump, compressor, agitator, pressure relief device, sampling connection system, open-ended valve or line, valve, connector, and instrumentation system in regulated material service; and any control devices or systems used to comply with this subpart.

First attempt at repair, for the purposes of this subpart, means to take action for the purpose of stopping or reducing leakage of organic material to the atmosphere, followed by monitoring as specified in § 63.1004(b) and, as applicable, in § 63.1004(c) of this subpart, as appropriate, to verify whether the leak is repaired, unless the owner or operator determines by other means that the leak is not repaired.

Fuel gas means gases that are combusted to derive useful work or heat.

Fuel gas system means the offsite and onsite piping and flow and pressure control system that gathers gaseous stream(s) generated by onsite operations, may blend them with other sources of gas, and transports the gaseous stream for use as a fuel gas in combustion equipment, such as furnaces and gas turbines, either singly or in combination.

In gas or vapor service means that a piece of equipment in regulated material service contains a gas or vapor at operating conditions.

In heavy liquid service means that a piece of equipment in regulated material is not in gas or vapor service or in light liquid service.

In light liquid service means that a piece of equipment in regulated-material service contains a liquid that meets the following conditions:

(1) The vapor pressure of one or more of the organic compounds is greater than 0.3 kilopascals at 20° C.

(2) The total concentration of the pure organic compounds constituents having a vapor pressure greater than 0.3 kilopascals at 20° C is equal to or greater than 20 percent by weight of the total process stream, and

(3) The fluid is a liquid at operating conditions.

(Note to definition of "In light liquid service": Vapor pressures may be determined by standard reference texts or ASTM D-2879.)

In liquid service means that a piece of equipment in regulated material service is not in gas or vapor service.

In organic hazardous air pollutant or in organic HAP service means that a piece of equipment either contains or contracts a fluid (liquid or gas) that is at least 5 percent by weight of total organic HAP's as determined according to the provisions of § 63.180(d) of subpart H. The provisions of § 63.180(d) of Subpart H also specify how to

63.985(a), or 63.987(a) due to planned routine maintenance.

(iii) A description of the planned routine maintenance during the next 6-month periodic reporting period that is anticipated to be performed for the control system when it is not expected to meet the required control efficiency. This description shall include the type of maintenance necessary, planned frequency of maintenance, and expected lengths of maintenance periods.

(5) If a control device other than a flare is used to control emissions from storage vessels or low throughput transfer racks, the periodic report shall describe each occurrence when the monitored parameters were outside of the parameter ranges documented in the Notification of Compliance Status in accordance with paragraph (b)(3) of this section. The description shall include the information specified in paragraphs (c)(5)(i) and (ii) of this section.

(i) Identification of the control device for which the measured parameters were outside of the established ranges, and

(ii) The cause for the measured parameters to be outside of the established ranges.

(6) For process vents and transfer racks (except low throughput transfer racks), periodic reports shall include the information specified in paragraphs (c)(6)(i) through (iv) of this section.

(i) Periodic reports shall include the daily average values of monitored parameters, calculated as specified in § 63.998(b)(3)(i) for any days when the daily average value is outside the bounds as defined in § 63.998(c)(2)(iii) or (c)(3)(iii), or the data availability requirements defined in paragraphs (c)(6)(i)(A) through (D) of this section are not met, whether these excursions are excused or unexcused excursions. For excursions caused by lack of monitoring data, the duration of periods when monitoring data were not collected shall be specified. An excursion means any of the cases listed in paragraphs (c)(6)(i)(A) through (C) of this section. If the owner or operator elects not to retain the daily average values pursuant to § 63.998(b)(5)(ii)(A), the owner or operator shall report this in the periodic report.

(A) When the daily average value of one or more monitored parameters is outside the permitted range.

(B) When the period of control or recovery device operation is 4 hours or greater in an operating day and monitoring data are insufficient to constitute a valid hour of data for at least 75 percent of the operating hours.

(C) When the period of control or recovery device operation is less than 4 hours in an operating day and more than one of the hours during the period of operation does not constitute a valid hour of data due to insufficient monitoring data.

(D) Monitoring data are insufficient to constitute a valid hour of data as used in paragraphs (c)(6)(i)(B) and (C) of this section, if measured values are unavailable for any of the 15-minute periods within the hour.

(ii) Report all carbon-bed regeneration cycles during which the parameters recorded under § 63.998(a)(2)(ii)(C) were outside the ranges established in the Notification of Compliance Status or in the operating permit.

(iii) The provisions of paragraph (c)(6)(i) and (ii) of this section do not apply to any low throughput transfer rack for which the owner or operator has elected to comply with § 63.985 or to any storage vessel for which the owner or operator is not required, by the applicable monitoring plan established under § 63.985(c)(1), to keep continuous records. If continuous records are required, the owner or operator shall specify in the monitoring plan whether the provisions of paragraphs (c)(6)(i) and (c)(6)(ii) of this section apply.

(iv) If the owner or operator has chosen to use the alternative recordkeeping requirements of § 63.998(b)(5), and has not notified the Administrator in the Notification of Compliance Status that the alternative recordkeeping provisions are being implemented as specified in paragraph (b)(5) of this section, the owner or operator shall notify the Administrator in the periodic report submitted immediately preceding implementation of the alternative. The notifications specified in § 63.998(b)(5)(ii) shall be included in the next Periodic Report following the identified event.

(7) As specified in § 63.997(c)(3), if an owner or operator at a facility not required to obtain a title V permit elects at a later date to replace an existing control or recovery device with a different control or recovery device, then the Administrator shall be notified by the owner or operator before implementing the change. This notification may be included in the facility's periodic reporting.

(d) *Requests for approval of monitoring alternatives.* (1) *Alternatives to the continuous operating parameter monitoring and recordkeeping provisions.* Requests for approval to use alternatives to continuous operating parameter monitoring and recordkeeping provisions, as provided for in § 63.996(d)(1), shall be submitted as specified in a referencing subpart, and the referencing subpart will govern the review and approval of such requests. The information specified in paragraphs (d)(1)(i) and (ii) of this section shall be included.

(i) A description of the proposed alternative system; and

(ii) Information justifying the owner or operator's request for an alternative method, such as the technical or economic infeasibility, or the impracticality, of the regulated source using the required method.

(2) *Monitoring a different parameter than those listed.* Requests for approval to monitor a different parameter than those established in § 63.996(c)(6) of this section or to set unique monitoring parameters, as provided for in § 63.996(d)(2), shall be submitted as specified as specified in a referencing subpart, and the referencing subpart will govern the review and approval of such requests. The information specified in paragraphs (d)(2)(i) through (iii) of this section shall be included in the request.

(i) A description of the parameter(s) to be monitored to ensure the control technology or pollution prevention measure is operated in conformance with its design and achieves the specified emission limit, percent reduction, or nominal efficiency, and an explanation of the criteria used to select the parameter(s);

(ii) A description of the methods and procedures that will be used to demonstrate that the parameter indicates proper operation of the control device, the schedule for this demonstration, and a statement that the owner or operator will establish a range for the monitored parameter(s) as part of the Notification of Compliance Status if required under a referencing subpart, unless this information has already been submitted; and

(iii) The frequency and content of monitoring, recording, and reporting, if monitoring and recording is not continuous, or if reports of daily average values when the monitored parameter value is outside the established range will not be included in periodic reports under paragraph (c) of this section. The rationale for the proposed monitoring, recording, and reporting system shall be included.

3. Part 63 is amended by adding subpart TT to read as follows:

Subpart TT—National Emission Standards for Equipment Leaks—Control Level 1

Sec.
63.1000 Applicability.
63.1001 Definitions.
63.1002 Compliance determination.
63.1003 Equipment identification.
63.1004 Instrument and sensory monitoring for leaks.

operator who elects to comply with § 63.982 by routing emissions from a storage vessel or low throughput transfer rack to a nonflare control device, as specified in § 63.985, shall submit, with the Notification of Compliance Status required by a referencing subpart, the applicable information specified in paragraphs (b)(2)(i) through (vi) of this section. Owners and operators who elect to comply with § 63.985(b)(1)(i) by submitting a design evaluation shall submit the information specified in paragraphs (b)(2)(i) through (iv) of this section. Owners and operators who elect to comply with § 63.985(b)(1)(ii) by submitting performance test results from a control device for a storage vessel or low throughput transfer rack shall submit the information specified in paragraphs (b)(2)(i), (ii), (iv), and (v) of this section. Owners and operators who elect to comply with § 63.985(b)(1)(ii) by submitting performance test results from a shared control device shall submit the information specified in paragraph (b)(2)(vi) of this section.

(i) A description of the parameter or parameters to be monitored to ensure that the control device is being properly operated and maintained, an explanation of the criteria used for selection of that parameter (or parameters), and the frequency with which monitoring will be performed (e.g., when the liquid level in the storage vessel is being raised). If continuous records are specified, indicate whether the provisions of § 63.999(c)(6) apply.

(ii) The operating range for each monitoring parameter identified in the monitoring plan required by § 63.985(c)(1). The specified operating range shall represent the conditions for which the control device is being properly operated and maintained.

(iii) The documentation specified in § 63.985(b)(1)(i), if the owner or operator elects to prepare a design evaluation.

(iv) The provisions of paragraph (c)(6) of this section do not apply to any low throughput transfer rack for which the owner or operator has elected to comply with § 63.985 or to any storage vessel for which the owner or operator is not required, by the applicable monitoring plan established under § 63.985(c)(1), to keep continuous records. If continuous records are required, the owner or operator shall specify in the monitoring plan whether the provisions of paragraph (c)(6) of this section apply.

(v) A summary of the results of the performance test described in § 63.985(b)(1)(ii). If such a performance test is conducted, submit the results of the performance test, including the information specified in § 63.999(a)(2)(ii) and (iii).

(vi) Identification of the storage vessel or transfer rack and control device for which the performance test will be submitted, and identification of the emission point(s), if any, that share the control device with the storage vessel or transfer rack and for which the performance test will be conducted.

(3) *Operating range for monitored parameters.* The owner or operator shall submit as part of the Notification of Compliance Status, the operating range for each monitoring parameter identified for each control, recovery, or halogen reduction device as determined pursuant to § 63.996(c)(6). The specified operating range shall represent the conditions for which the control, recovery, or halogen reduction device is being properly operated and maintained. This report shall include the information in paragraphs (b)(3)(i) through (iii) of this section, as applicable, unless the range and the operating day have been established in the operating permit.

(i) The specific range of the monitored parameter(s) for each emission point:

(ii) The rationale for the specific range for each parameter for each emission point, including any data and calculations used to develop the range and a description of why the range indicates proper operation of the control, recovery, or halogen reduction device, as specified in paragraphs (b)(3)(ii)(A), (B), or (C) of this section, as applicable.

(A) If a performance test or TRE index value determination is required by a referencing subpart for a control, recovery or halogen reduction device, the range shall be based on the parameter values measured during the TRE index value determination or performance test and may be supplemented by engineering assessments and/or manufacturer's recommendations. TRE index value determinations and performance testing are not required to be conducted over the entire range of permitted parameter values.

(B) If a performance test or TRE index value determination is not required by a referencing subpart for a control, recovery, or halogen reduction device, the range may be based solely on engineering assessments and/or manufacturer's recommendations.

(C) The range may be based on ranges or limits previously established under a referencing subpart.

(iii) A definition of the source's operating day for purposes of determining daily average values of monitored parameters. The definition shall specify the times at which an operating day begins and ends.

(4) *Halogen reduction device.* The owner or operator shall submit as part of the Notification of Compliance Status the information recorded pursuant to § 63.998(a)(4).

(5) *Alternative recordkeeping.* The owner or operator shall notify the Administrator in the Notification of Compliance Status if the alternative recordkeeping requirements of § 63.998(b)(5) are being implemented. If the Notification of Compliance Status has already been submitted, the notification must be in the periodic report submitted immediately preceding implementation of the alternative, as specified in paragraph (c)(6)(iv) of this section.

(c) *Periodic reports.* (1) Periodic reports shall include the reporting period dates, the total source operating time for the reporting period, and, as applicable, all information specified in this section and in the referencing subpart, including reports of periods when monitored parameters are outside their established ranges.

(2) For closed vent systems subject to the requirements of § 63.983, the owner or operator shall submit as part of the periodic report the information specified in paragraphs (c)(2)(i) through (iii) of this section, as applicable.

(i) The information recorded in § 63.998(d)(1)(iii)(B) through (E):

(ii) Reports of the times of all periods recorded under § 63.998(d)(1)(ii)(A) when the vent stream is diverted from the control device through a bypass line: and

(iii) Reports of all times recorded under § 63.998(d)(1)(ii)(B) when maintenance is performed in car-sealed valves, when the seal is broken, when the bypass line valve position is changed, or the key for a lock-and-key type configuration has been checked out.

(3) For flares subject to this subpart, report all periods when all pilot flames were absent or the flare flame was absent as recorded in § 63.998(a)(1)(i)(C).

(4) For storage vessels, the owner or operator shall include in each periodic report required the information specified in paragraphs (c)(4)(i) through (iii) of this section.

(i) For the 6-month period covered by the periodic report, the information recorded in § 63.998(d)(2)(ii)(A) through (C).

(ii) For the time period covered by the periodic report and the previous periodic report, the total number of hours that the control system did not meet the requirements of §§ 63.983(a),

referencing subpart. The records specified in paragraph (d)(4)(i) of this section shall be retained for the life of the equipment. The records specified in paragraph (d)(4)(ii) of this section shall be retained for 5 years.

(i) The design specifications and performance demonstrations specified in paragraphs (d)(4)(i)(A) through (C) of this section.

(A) Detailed schematics, design specifications of the control device, and piping and instrumentation diagrams.

(B) The dates and descriptions of any changes in the design specifications.

(C) A description of the parameter or parameters monitored, as required in a referencing subpart, to ensure that control devices are operated and maintained in conformance with their design and an explanation of why that parameter (or parameters) was selected for the monitoring.

(ii) Records of operation of closed vent systems and control devices, as specified in paragraphs (d)(4)(ii)(A) through (C) of this section.

(A) Dates and durations when the closed vent systems and control devices required are not operated as designed as indicated by the monitored parameters.

(B) Dates and durations during which the monitoring system or monitoring device is inoperative.

(C) Dates and durations of start-ups and shutdowns of control devices required in this subpart.

(5) *Records of monitored parameters outside of range.* The owner or operator shall record the occurrences and the cause of periods when the monitored parameters are outside of the parameter ranges documented in the Notification of Compliance Status report. This information shall also be reported in the Periodic Report.

§ 63.999 Notifications and other reports.

(a) *Performance test and flare compliance assessment notifications and reports.* (1) *General requirements.* General requirements for performance test and flare compliance assessment notifications and reports are specified in paragraphs (a)(1)(i) through (iii) of this section.

(i) The owner or operator shall notify the Administrator of the intention to conduct a performance test or flare compliance assessment at least 30 days before such a compliance demonstration is scheduled to allow the Administrator the opportunity to have an observer present. If after 30 days notice for such an initially scheduled compliance demonstration, there is a delay (due to operational problems, etc.) in conducting the scheduled compliance demonstration, the owner or operator of an affected facility shall notify the Administrator as soon as possible of any delay in the original demonstration date. The owner or operator shall provide at least 7 days prior notice of the rescheduled date of the compliance demonstration, or arrange a rescheduled date with the Administrator by mutual agreement.

(ii) Unless specified differently in this subpart or a referencing subpart, performance test and flare compliance assessment reports, not submitted as part of a Notification of Compliance Status report, shall be submitted to the Administrator within 60 days of completing the test or determination.

(iii) Any application for a waiver of an initial performance test or flare compliance assessment, as allowed by § 63.997(b)(2), shall be submitted no later than 90 days before the performance test or compliance assessment is required. The application for a waiver shall include information justifying the owner or operator's request for a waiver, such as the technical or economic infeasibility, or the impracticality, of the source performing the test.

(iv) Any application to substitute a prior performance test or compliance assessment for an initial performance test or compliance assessment, as allowed by § 63.997(b)(1), shall be submitted no later than 90 days before the performance test or compliance test is required. The application for substitution shall include information demonstrating that the prior performance test or compliance assessment was conducted using the same methods specified in § 63.997(e) or § 63.987(b)(3), as applicable. The application shall also include information demonstrating that no process changes have been made since the test, or that the results of the performance test or compliance assessment reliably demonstrate compliance despite process changes.

(2) *Performance test and flare compliance assessment report submittal and content requirements.* Performance test and flare compliance assessment reports shall be submitted as specified in paragraphs (a)(2)(i) through (iii) of this section.

(i) For performance tests or flare compliance assessments, the Notification of Compliance Status or performance test and flare compliance assessment report shall include one complete test report as specified in paragraph (a)(2)(ii) of this section for each test method used for a particular kind of emission point and other applicable information specified in (a)(2)(iii) of this section. For additional tests performed for the same kind of emission point using the same method, the results and any other information required in applicable sections of this subpart shall be submitted, but a complete test report is not required.

(ii) A complete test report shall include a brief process description, sampling site description, description of sampling and analysis procedures and any modifications to standard procedures, quality assurance procedures, record of operating conditions during the test, record of preparation of standards, record of calibrations, raw data sheets for field sampling, raw data sheets for field and laboratory analyses, documentation of calculations, and any other information required by the test method.

(iii) The performance test or flare compliance assessment report shall also include the information specified in (a)(2)(iii)(A) through (C) of this section, as applicable.

(A) For flare compliance assessments, the owner or operator shall submit the records specified in § 63.998(a)(1)(i).

(B) For nonflare control device and halogen reduction device performance tests as required under §§ 63.988(b), 63.990(b), 63.994(b), or 63.995(b), also submit the records specified in § 63.998(a)(2)(ii), as applicable.

(C) For recovery devices also submit the records specified in § 63.998(a)(3), as applicable.

(b) *Notification of Compliance Status.* (1) *Routing storage vessel or transfer rack emissions to a process or fuel gas system.* An owner or operator who elects to comply with § 63.982 by routing emissions from a storage vessel or transfer rack to a process or to a fuel gas system, as specified in § 63.984, shall submit as part of the Notification of Compliance Status the information specified in paragraphs (b)(1)(i) and (ii), or (iii) of this section, as applicable.

(i) If storage vessels emissions are routed to a process, the owner or operator shall submit the information specified in § 63.984(b)(2) and (3).

(ii) As specified in § 63.984(c), if storage vessels emissions are routed to a fuel gas system, the owner or operator shall submit a statement that the emission stream is connected to the fuel gas system and whether the conveyance system is subject to the requirements of § 63.983.

(iii) As specified in § 63.984(c), report that the transfer rack emission stream is being routed to a fuel gas system or process, when complying with a referencing subpart.

(2) *Routing storage vessel or low throughput transfer rack emissions to a nonflare control device.* An owner or

system as a control device shall keep readily accessible, continuous records of the equipment operating parameters specified to be monitored under §§ 63.990(c) (absorber, condenser, and carbon adsorber monitoring), 63.993(c) (recovery device monitoring), or 63.995(c) (other noncombustion systems used as a control device monitoring) or as approved by the Administrator in accordance with a referencing subpart. For transfer racks, continuous records are required while the transfer vent stream is being vented.

(ii) Each owner or operator shall keep records of the daily average value of each continuously monitored parameter for each operating day determined according to the procedures specified in paragraph (b)(3)(i) of this section. If carbon adsorber regeneration stream flow and carbon bed regeneration temperature are monitored, the records specified in paragraphs (c)(3)(ii)(A) and (B) of this section shall be kept instead of the daily averages.

(A) Records of total regeneration stream mass or volumetric flow for each carbon-bed regeneration cycle.

(B) Records of the temperature of the carbon bed after each regeneration and within 15 minutes of completing any cooling cycle.

(iii) Each owner or operator subject to the provisions of this subpart shall keep up-to-date, readily accessible records of periods of operation during which the parameter boundaries are exceeded. The parameter boundaries are established pursuant to § 63.996(c)(6).

(d) *Other records.* (1) *Closed vent system records.* For closed vent systems the owner or operator shall record the information specified in paragraphs (d)(1)(i) through (iv) of this section, as applicable.

(i) For closed vent systems collecting regulated material from a regulated source, the owner or operator shall record the identification of all parts of the closed vent system, that are designated as unsafe or difficult to inspect, an explanation of why the equipment is unsafe or difficult to inspect, and the plan for inspecting the equipment required by § 63.983(b)(2)(ii) or (iii) of this section.

(ii) For each closed vent system that contains bypass lines that could divert a vent stream away from the control device and to the atmosphere, the owner or operator shall keep a record of the information specified in either paragraph (d)(1)(ii)(A) or (B) of this section, as applicable.

(A) Hourly records of whether the flow indicator specified under § 63.983(a)(3)(i) was operating and whether a diversion was detected at any time during the hour, as well as records of the times of all periods when the vent stream is diverted from the control device or the flow indicator is not operating.

(B) Where a seal mechanism is used to comply with § 63.983(a)(3)(ii), hourly records of flow are not required. In such cases, the owner or operator shall record that the monthly visual inspection of the seals or closure mechanisms has been done, and shall record the occurrence of all periods when the seal mechanism is broken, the bypass line valve position has changed, or the key for a lock-and-key type lock has been checked out, and records of any car-seal that has been broken.

(iii) For a closed vent system collecting regulated material from a regulated source, when a leak is detected as specified in § 63.983(d)(2), the information specified in paragraphs (d)(1)(iii)(A) through (F) of this section shall be recorded and kept for 5 years.

(A) The instrument and the equipment identification number and the operator name, initials, or identification number.

(B) The date the leak was detected and the date of the first attempt to repair the leak.

(C) The date of successful repair of the leak.

(D) The maximum instrument reading measured by the procedures in § 63.983(c) after the leak is successfully repaired or determined to be nonrepairable.

(E) "Repair delayed" and the reason for the delay if a leak is not repaired within 15 days after discovery of the leak. The owner or operator may develop a written procedure that identifies the conditions that justify a delay of repair. In such cases, reasons for delay of repair may be documented by citing the relevant sections of the written procedure.

(F) Copies of the Periodic Reports as specified in § 63.999(c), if records are not maintained on a computerized database capable of generating summary reports from the records.

(iv) For each instrumental or visual inspection conducted in accordance with § 63.983(b)(1) for closed vent systems collecting regulated material from a regulated source during which no leaks are detected, the owner or operator shall record that the inspection was performed, the date of the inspection, and a statement that no leaks were detected.

(2) *Storage vessel and transfer rack records.* An owner or operator shall keep readily accessible records of the information specified in paragraphs (d)(2)(i) and (ii) of this section, as applicable.

(i) A record of the measured values of the parameters monitored in accordance with § 63.985(c) or § 63.987(c).

(ii) A record of the planned routine maintenance performed on the control system during which the control system does not meet the applicable specifications of §§ 63.983(a), 63.985(a), or 63.987(a), as applicable, due to the planned routine maintenance. Such a record shall include the information specified in paragraphs (d)(2)(ii)(A) through (C) of this section. This information shall be submitted in the Periodic Reports as specified in § 63.999(c)(4).

(A) The first time of day and date the requirements of §§ 63.983(a), § 63.985(a), or § 63.987(a), as applicable, were not met at the beginning of the planned routine maintenance, and

(B) The first time of day and date the requirements of §§ 63.983(a), 63.985(a), or 63.987(a), as applicable, were met at the conclusion of the planned routine maintenance.

(C) A description of the type of maintenance performed.

(3) *Regulated source and control equipment start-up, shutdown and malfunction records.* (i) Records of the occurrence and duration of each start-up, shutdown, and malfunction of operation of process equipment or of air pollution control equipment used to comply with this part during which excess emissions (as defined in a referencing subpart) occur.

(ii) For each start-up, shutdown, and malfunction during which excess emissions occur, records that the procedures specified in the source's start-up, shutdown, and malfunction plan were followed, and documentation of actions taken that are not consistent with the plan. For example, if a start-up, shutdown, and malfunction plan includes procedures for routing control device emissions to a backup control device (e.g., the incinerator for a halogenated stream could be routed to a flare during periods when the primary control device is out of service), records must be kept of whether the plan was followed. These records may take the form of a "checklist," or other form of recordkeeping that confirms conformance with the start-up, shutdown, and malfunction plan for the event.

(4) *Equipment leak records.* The owner or operator shall maintain records of the information specified in paragraphs (d)(4)(i) and (ii) of this section for closed vent systems and control devices if specified by the equipment leak provisions in a

Thereafter, the superseded description may be stored off-site.

(ii) If an owner or operator has elected to implement the requirements of paragraph (b)(5)(i) of this section, and a period of 6 consecutive months has passed without an excursion as defined in paragraph (b)(6)(i) of this section, the owner or operator is no longer required to record the daily average value for that parameter for that unit of equipment, for any operating day when the daily average value is less than the maximum, or greater than the minimum established limit. With approval by the Administrator, monitoring data generated prior to the compliance date of this subpart shall be credited toward the period of 6 consecutive months, if the parameter limit and the monitoring were required and/or approved by the Administrator.

(A) If the owner or operator elects not to retain the daily average values, the owner or operator shall notify the Administrator in the next Periodic Report, as specified in § 63.999(c)(6)(i). The notification shall identify the parameter and unit of equipment.

(B) If there is an excursion as defined in paragraph (b)(6)(i) of this section on any operating day after the owner or operator has ceased recording daily averages as provided in paragraph (b)(5)(ii) of this section, the owner or operator shall immediately resume retaining the daily average value for each operating day, and shall notify the Administrator in the next Periodic Report, as specified in § 63.999(c). The owner or operator shall continue to retain each daily average value until another period of 6 consecutive months has passed without an excursion as defined in paragraph (b)(6)(i) of this section.

(C) The owner or operator shall retain the records specified in paragraphs (b)(5)(i)(A) through (F) of this section for the duration specified in a referencing subpart. For any week, if compliance with paragraphs (b)(5)(i)(A) through (D) of this section does not result in retention of a record of at least one occurrence or measured parameter value, the owner or operator shall record and retain at least one parameter value during a period of operation other than a start-up, shutdown, or malfunction.

(6)(i) For the purposes of this section, an excursion means that the daily average value of monitoring data for a parameter is greater than the maximum, or less than the minimum established value, except as provided in paragraphs (b)(6)(i)(A) and (B) of this section.

(A) The daily average value during any start-up, shutdown or malfunction shall not be considered an excursion if the owner or operator follows the applicable provisions of the start-up, shutdown, and malfunction plan required by a referencing subpart and maintains the records specified in paragraph (d)(3) of this section.

(B) An excused excursion, as described in paragraph (b)(6)(ii), does not count toward the number of excursions for the purposes of this subpart.

(ii) One excused excursion for each control device or recovery device for each semiannual period is allowed. If a source has developed a start-up, shutdown and malfunction plan, and a monitored parameter is outside its established range or monitoring data are not collected during periods of start-up, shutdown, or malfunction (and the source is operated during such periods in accordance with the start-up, shutdown, and malfunction plan) or during periods of nonoperation of the process unit or portion thereof (resulting in cessation of the emissions to which monitoring applies), then the excursion is not a violation and, in cases where continuous monitoring is required, the excursion does not count as the excused excursion for determining compliance.

(c) *Nonflare control and recovery device regulated source monitoring records.* (1) *Monitoring system records.* For process vents and high throughput transfer racks, the owner or operator subject to this subpart shall keep the records specified in this paragraph, as well as records specified elsewhere in this subpart.

(i) For a CPMS used to comply with this part, a record of the procedure used for calibrating the CPMS.

(ii) For a CPMS used to comply with this subpart, records of the information specified in paragraphs (c)(ii)(A) through (H) of this section, as indicated in a referencing subpart.

(A) The date and time of completion of calibration and preventive maintenance of the CPMS.

(B) The "as found" and "as left" CPMS readings, whenever an adjustment is made that affects the CPMS reading and a "no adjustment" statement otherwise.

(C) The start time and duration or start and stop times of any periods when the CPMS is inoperative.

(D) Records of the occurrence and duration of each start-up, shutdown, and malfunction of CPMS used to comply with this subpart during which excess emissions (as defined in a referencing subpart) occur.

(E) For each start-up, shutdown, and malfunction during which excess emissions as defined in a referencing subpart occur, records whether the procedures specified in the source's start-up, shutdown, and malfunction plan were followed, and documentation of actions taken that are not consistent with the plan. These records may take the form of a "checklist," or other form of recordkeeping that confirms conformance with the start-up, shutdown, and malfunction plan for the event.

(F) Records documenting each start-up, shutdown, and malfunction event.

(G) Records of CPMS start-up, shutdown, and malfunction event that specify that there were no excess emissions during the event, as applicable.

(H) Records of the total duration of operating time.

(2) *Combustion control and halogen reduction device monitoring records.* (i) Each owner or operator using a combustion control or halogen reduction device to comply with this subpart shall keep the following records up-to-date and readily accessible, as applicable. Continuous records of the equipment operating parameters specified to be monitored under §§ 63.988(c) (incinerator, boiler, and process heater monitoring), 63.994(c) (halogen reduction device monitoring), and 63.995(c) (other combustion systems used as control device monitoring) or approved by the Administrator in accordance with a referencing subpart.

(ii) Each owner or operator shall keep records of the daily average value of each continuously monitored parameter for each operating day determined according to the procedures specified in paragraph (b)(3)(i) of this section. For catalytic incinerators, record the daily average of the temperature upstream of the catalyst bed and the daily average of the temperature differential across the bed. For halogen scrubbers record the daily average pH and the liquid-to-gas ratio.

(iii) Each owner or operator subject to the provisions of this subpart shall keep up-to-date, readily accessible records of periods of operation during which the parameter boundaries are exceeded. The parameter boundaries are established pursuant to § 63.996(c)(6).

(3) *Monitoring records for recovery devices, absorbers, condensers, carbon adsorbers or other noncombustion systems used as control devices.* (i) Each owner or operator using a recovery device to achieve and maintain a TRE index value greater than the control applicability level specified in the referencing subpart but less than 4.0 or using an absorber, condenser, carbon adsorber or other non-combustion

(3) *Records of daily averages.* In addition to the records specified in paragraph (a), owners or operators shall keep records as specified in paragraphs (b)(3)(i) and (ii) of this section and submit reports as specified in § 63.999(c), unless an alternative recordkeeping system has been requested and approved under a referencing subpart.

(i) Except as specified in paragraph (b)(3)(ii) of this section, daily average values of each continuously monitored parameter shall be calculated from data meeting the specifications of paragraph (b)(2) of this section for each operating day and retained for 5 years.

(A) The daily average shall be calculated as the average of all values for a monitored parameter recorded during the operating day. The average shall cover a 24-hour period if operation is continuous, or the period of operation per operating day if operation is not continuous (e.g., for transfer racks the average shall cover periods of loading). If values are measured more frequently than once per minute, a single value for each minute may be used to calculate the daily average instead of all measured values.

(B) The operating day shall be the period defined in the operating permit or in the Notification of Compliance Status. It may be from midnight to midnight or another daily period.

(ii) If all recorded values for a monitored parameter during an operating day are within the range established in the Notification of Compliance Status or in the operating permit, the owner or operator may record that all values were within the range and retain this record for 5 years rather than calculating and recording a daily average for that operating day. In such cases, the owner or operator may not discard the recorded values as allowed in paragraph (b)(1)(iii) of this section.

(4) [Reserved]

(5) *Alternative recordkeeping.* For any parameter with respect to any item of equipment associated with a process vent or transfer rack (except low throughput transfer loading racks), the owner or operator may implement the recordkeeping requirements in paragraphs (b)(5)(i) or (ii) of this section as alternatives to the recordkeeping provisions listed in paragraphs (b)(1) through (3) of this section. The owner or operator shall retain each record required by paragraphs (b)(5)(i) or (ii) of this section as provided in a referencing subpart.

(i) The owner or operator may retain only the daily average value, and is not required to retain more frequently monitored operating parameter values, for a monitored parameter with respect to an item of equipment, if the requirements of paragraphs (b)(5)(i)(A) through (F) of this section are met. The owner or operator shall notify the Administrator in the Notification of Compliance Status as specified in § 63.999(b)(5) or, if the Notification of Compliance Status has already been submitted, in the Periodic Report immediately preceding implementation of the requirements of this paragraph, as specified in § 63.999(c)(6)(iv).

(A) The monitoring system is capable of detecting unrealistic or impossible data during periods of operation other than start-ups, shutdowns or malfunctions (e.g., a temperature reading of −200° C on a boiler), and will alert the operator by alarm or other means. The owner or operator shall record the occurrence. All instances of the alarm or other alert in an operating day constitute a single occurrence.

(B) The monitoring system generates a running average of the monitoring values, updated at least hourly throughout each operating day, that have been obtained during that operating day, and the capability to observe this average is readily available to the Administrator on-site during the operating day. The owner or operator shall record the occurrence of any period meeting the criteria in paragraphs (b)(5)(i)(B)(*1*) through (*3*) of this section. All instances in an operating day constitute a single occurrence.

(*1*) The running average is above the maximum or below the minimum established limits;

(*2*) The running average is based on at least six one-hour average values; and

(*3*) The running average reflects a period of operation other than a start-up, shutdown, or malfunction.

(C) The monitoring system is capable of detecting unchanging data during periods of operation other than start-ups, shutdowns or malfunctions, except in circumstances where the presence of unchanging data is the expected operating condition based on past experience (e.g., pH in some scrubbers), and will alert the operator by alarm or other means. The owner or operator shall record the occurrence. All instances of the alarm or other alert in an operating day constitute a single occurrence.

(D) The monitoring system will alert the owner or operator by an alarm, if the running average parameter value calculated under paragraph (b)(5)(i)(B) of this section reaches a set point that is appropriately related to the established limit for the parameter that is being monitored.

(E) The owner or operator shall verify the proper functioning of the monitoring system, including its ability to comply with the requirements of paragraph (b)(5)(i) of this section, at the times specified in paragraphs (b)(5)(i)(E)(*1*) through (*3*) of this section. The owner or operator shall document that the required verifications occurred.

(*1*) Upon initial installation.

(*2*) Annually after initial installation.

(*3*) After any change to the programming or equipment constituting the monitoring system that might reasonably be expected to alter the monitoring system's ability to comply with the requirements of this section.

(F) The owner or operator shall retain the records identified in paragraphs (b)(5)(i)(F)(*1*) through (*4*) of this section.

(*1*) Identification of each parameter, for each item of equipment, for which the owner or operator has elected to comply with the requirements of paragraph (b)(5)(i) of this section.

(*2*) A description of the applicable monitoring system(s), and of how compliance will be achieved with each requirement of paragraph (b)(5)(i)(A) through (E) of this section. The description shall identify the location and format (e.g., on-line storage; log entries) for each required record. If the description changes, the owner or operator shall retain both the current and the most recent superseded description. The description, and the most recent superseded description, shall be retained as provided in the subpart that references this subpart, except as provided in paragraph (b)(5)(i)(F)(*1*) of this section.

(*3*) A description, and the date, of any change to the monitoring system that would reasonably be expected to affect its ability to comply with the requirements of paragraph (b)(5)(i) of this section.

(*4*) Owners and operators subject to paragraph (b)(5)(i)(F)(*2*) of this section shall retain the current description of the monitoring system as long as the description is current, but not less than 5 years from the date of its creation. The current description shall be retained on-site at all times or be accessible from a central location by computer or other means that provides access within 2 hours after a request. The owner or operator shall retain the most recent superseded description at least until 5 years from the date of its creation. The superseded description shall be retained on-site (or accessible from a central location by computer that provides access within 2 hours after a request) at least 6 months after being superseded.

44 megawatts and where the process vent stream is introduced with combustion air or used as a secondary fuel and is not mixed with the primary fuel, record the percent reduction of organic regulated material or TOC, or the concentration of regulated material or TOC (parts per million by volume, by compound) determined as specified in § 63.997(e)(2) at the outlet of the combustion device.

(C) *Other nonflare control devices.* Where an owner or operator seeks to use an absorber, condenser, or carbon adsorber as a control device, the information specified in paragraphs (a)(2)(ii)(C)(*1*) through (*5*) of this section shall be recorded, as applicable.

(*1*) Where an absorber is used as the control device, the exit specific gravity and average exit temperature of the absorbing liquid averaged over the same time period as the performance test (both measured while the vent stream is normally routed and constituted); or

(*2*) Where a condenser is used as the control device, the average exit (product side) temperature averaged over the same time period as the performance test while the vent stream is routed and constituted normally; or

(*3*) Where a carbon adsorber is used as the control device, the total regeneration stream mass flow during each carbon-bed regeneration cycle during the period of the performance test, and temperature of the carbon-bed after each regeneration during the period of the performance test (and within 15 minutes of completion of any cooling cycle or cycles; or

(*4*) As an alternative to paragraph (a)(2)(ii)(C)(*1*), (*2*), or (*3*) of this section, the concentration level or reading indicated by an organics monitoring device at the outlet of the absorber, condenser, or carbon adsorber averaged over the same time period as the performance test while the vent stream is normally routed and constituted.

(*5*) For an absorber, condenser, or carbon adsorber used as a control device, the percent reduction of regulated material achieved by the control device or concentration of regulated material (parts per million by volume, by compound) at the outlet of the control device.

(D) *Halogen reduction devices.* When using a scrubber following a combustion device to control a halogenated vent stream, record the information specified in paragraphs (a)(2)(ii)(D)(*1*) through (*3*) of this section.

(*1*) The percent reduction or scrubber outlet mass emission rate of total hydrogen halides and halogens as specified in § 63.997(e)(3).

(*2*) The pH of the scrubber effluent averaged over the time period of the performance test; and

(*3*) The scrubber liquid-to-gas ratio averaged over the time period of the performance test.

(3) *Recovery device monitoring records during TRE index value determination.* For process vents that require control of emissions under a referencing subpart, owners or operators using a recovery device to maintain a TRE above a level specified in the referencing subpart shall maintain the continuous records specified in paragraph (a)(3)(i) through (v) of this section, as applicable, and submit reports as specified in § 63.999(a)(2)(iii)(C).

(i) Where an absorber is the final recovery device in the recovery system and the saturated scrubbing fluid and specific gravity of the scrubbing fluid is greater than or equal to 0.02 specific gravity units, the exit specific gravity (or alternative parameter that is a measure of the degree of absorbing liquid saturation if approved by the Administrator) and average exit temperature of the absorbing liquid averaged over the same time period as the TRE index value determination (both measured while the vent stream is normally routed and constituted); or

(ii) Where a condenser is the final recovery device in the recovery system, the average exit (product side) temperature averaged over the same time period as the TRE index value determination while the vent stream is routed and constituted normally; or

(iii) Where a carbon adsorber is the final recovery device in the recovery system, the total regeneration stream mass flow during each carbon-bed regeneration cycle during the period of the TRE index value determination, and temperature of the carbon-bed after each regeneration during the period of the TRE index value determination (and within 15 minutes of completion of any cooling cycle or cycles); or

(iv) As an alternative to paragraph (a)(3)(i), (ii), or (iii) of this section, the concentration level or reading indicated by an organics monitoring device at the outlet of the absorber, condenser, or carbon adsorber averaged over the same time period as the TRE index value determination while the vent stream is normally routed and constituted.

(v) All measurements and calculations performed to determine the TRE index value of the vent stream as specified in a referencing subpart.

(4) *Halogen concentration records.* Record the halogen concentration in the vent stream determined according to the procedures specified in a referencing subpart. Submit this record in the Notification of Compliance Status, as specified in § 63.999(b)(4). If the owner or operator designates the vent stream as halogenated, then this shall be recorded and reported in the Notification of Compliance Status report.

(b) *Continuous records and monitoring system data handling.* (1) *Continuous records.* Where this subpart requires a continuous record, the owner or operator shall maintain a record as specified in paragraphs (b)(1)(i) through (iv) of this section, as applicable:

(i) A record of values measured at least once every 15 minutes or each measured value for systems which measure more frequently than once every 15 minutes; or

(ii) A record of block average values for 15-minute or shorter periods calculated from all measured data values during each period or from at least one measured data value per minute if measured more frequently than once per minute.

(iii) Where data is collected from an automated continuous parameter monitoring system, the owner or operator may calculate and retain block hourly average values from each 15-minute block average period or from at least one measured value per minute if measured more frequently than once per minute, and discard all but the most recent three valid hours of continuous (15-minute or shorter) records, if the hourly averages do not exclude periods of CPMS breakdown or malfunction. An automated CPMS records the measured data and calculates the hourly averages through the use of a computerized data acquisition system.

(iv) A record as required by an alternative approved under a referencing subpart.

(2) *Excluded data.* Monitoring data recorded during periods identified in paragraphs (b)(2)(i) through (iii) of this section shall not be included in any average computed to determine compliance with an emission limit in a referencing subpart.

(i) Monitoring system breakdowns, repairs, preventive maintenance, calibration checks, and zero (low-level) and high-level adjustments;

(ii) Periods of non-operation of the process unit (or portion thereof), resulting in cessation of the emissions to which the monitoring applies; and

(iii) Start-ups, shutdowns, and malfunctions, if the owner or operator follows the applicable provisions of the start-up, shutdown, and malfunction plan required by a referencing subpart and maintains the records specified in paragraph (d)(3) of this section.

$$E_o = \frac{\sum_{j=1}^{n} M_{oj}}{T} \quad \text{[Eq. 9]}$$

Where:

E_i, E_o = Mass flow rate of organic compounds at the inlet (i) and outlet (o) of the control device, kilograms per hour.

n = Number of testing intervals.

M_{ij}, M_{oj} = Mass of organic compounds at the inlet (i) or outlet (o) during testing interval j, kilograms.

T = Total time of all testing intervals, hours.

(3) An owner or operator using a halogen scrubber or other halogen reduction device to control process vent and transfer rack halogenated vent streams in compliance with a referencing subpart, who is required to conduct a performance test to determine compliance with a control efficiency or emission limit for hydrogen halides and halogens, shall follow the procedures specified in paragraphs (e)(3) (i) through (iv) of this section.

(i) For an owner or operator determining compliance with the percent reduction of total hydrogen halides and halogens, sampling sites shall be located at the inlet and outlet of the scrubber or other halogen reduction device used to reduce halogen emissions. For an owner or operator determining compliance with a kilogram per hour outlet emission limit for total hydrogen halides and halogens, the sampling site shall be located at the outlet of the scrubber or other halogen reduction device and prior to any releases to the atmosphere.

(ii) Except as provided in paragraph (e)(1)(iv) of this section, Method 26 or Method 26A of 40 CFR part 60, appendix A, shall be used to determine the concentration, in milligrams per dry standard cubic meter, of total hydrogen halides and halogens that may be present in the vent stream. The mass emissions of each hydrogen halide and halogen compound shall be calculated from the measured concentrations and the gas stream flow rate.

(iii) To determine compliance with the percent removal efficiency, the mass emissions for any hydrogen halides and halogens present at the inlet of the halogen reduction device shall be summed together. The mass emissions of the compounds present at the outlet of the scrubber or other halogen reduction device shall be summed together. Percent reduction shall be determined by comparison of the summed inlet and outlet measurements.

(iv) To demonstrate compliance with a kilogram per hour outlet emission limit, the test results must show that the mass emission rate of total hydrogen halides and halogens measured at the outlet of the scrubber or other halogen reduction device is below the kilogram per hour outlet emission limit specified in a referencing subpart.

§ 63.998 Recordkeeping requirements.

(a) *Compliance assessment, monitoring, and compliance records.* (1) *Conditions of flare compliance assessment, monitoring, and compliance records.* Upon request, the owner or operator shall make available to the Administrator such records as may be necessary to determine the conditions of flare compliance assessments performed pursuant to § 63.987(b).

(i) *Flare compliance assessment records.* When using a flare to comply with this subpart, record the information specified in paragraphs (a)(1)(i)(A) through (C) of this section for each flare compliance assessment performed pursuant to § 63.987(b). As specified in § 63.999(a)(2)(iii)(A), the owner or operator shall include this information in the flare compliance assessment report.

(A) Flare design (i.e., steam-assisted, air-assisted, or non-assisted);

(B) All visible emission readings, heat content determinations, flow rate measurements, and exit velocity determinations made during the flare compliance assessment; and

(C) All periods during the flare compliance assessment when all pilot flames are absent or, if only the flare flame is monitored, all periods when the flare flame is absent.

(ii) *Monitoring records.* Each owner or operator shall keep up to date and readily accessible hourly records of whether the monitor is continuously operating and whether the flare flame or at least one pilot flame is continuously present. For transfer racks, hourly records are required only while the transfer rack vent stream is being vented.

(iii) *Compliance records.* (A) Each owner or operator shall keep records of the times and duration of all periods during which the flare flame or all the pilot flames are absent. This record shall be submitted in the periodic reports as specified in § 63.999(c)(8).

(B) Each owner or operator shall keep records of the times and durations of all periods during which the monitor is not operating.

(2) *Nonflare control device performance test records.* (i) *Availability of performance test records.* Upon request, the owner or operator shall make available to the Administrator such records as may be necessary to determine the conditions of performance tests performed pursuant to §§ 63.988(b), 63.990(b), 63.994(b), or 63.995(b).

(ii) *Nonflare control device and halogen reduction device performance test records.* (A) *General requirements.* Each owner or operator subject to the provisions of this subpart shall keep up-to-date, readily accessible continuous records of the data specified in (a)(2)(ii)(B) through (D) of this section, as applicable, measured during each performance test performed pursuant to §§ 63.988(b), 63.990(b), 63.994(b), or 63.995(b), and also include that data in the Notification of Compliance Status required under § 63.999(b). The same data specified in this section shall be submitted in the reports of all subsequently required performance tests where either the emission control efficiency of a combustion device, or the outlet concentration of TOC or regulated material is determined.

(B) *Nonflare combustion device.* Where an owner or operator subject to the provisions of this paragraph seeks to demonstrate compliance with a percent reduction requirement or a parts per million by volume requirement using a nonflare combustion device the information specified in (a)(2)(ii)(B)(*1*) through (*6*) of this section shall be recorded.

(*1*) For thermal incinerators, record the fire box temperature averaged over the full period of the performance test.

(*2*) For catalytic incinerators, record the upstream and downstream temperatures and the temperature difference across the catalyst bed averaged over the full period of the performance test.

(*3*) For a boiler or process heater with a design heat input capacity less than 44 megawatts and a vent stream that is not introduced with or as the primary fuel, record the fire box temperature averaged over the full period of the performance test.

(*4*) For an incinerator, record the percent reduction of organic regulated material, if applicable, or TOC achieved by the incinerator determined as specified in § 63.997(e)(2)(iv), as applicable, or the concentration of organic regulated material (parts per million by volume, by compound) determined as specified in § 63.997(e)(2)(iii) at the outlet of the incinerator.

(*5*) For a boiler or process heater, record a description of the location at which the vent stream is introduced into the boiler or process heater.

(*6*) For a boiler or process heater with a design heat input capacity of less than

procedures in Method 301 of appendix A of this part may be used. Method 25A or 25B of 40 CFR part 60, appendix A may be used for transfer racks as detailed in paragraph (e)(2)(iv)(E) of this section. Procedures specified in paragraphs (e)(2)(iv)(A) through (e)(2)(iv)(E) of this section shall be used to calculate percent reduction efficiency.

(A) *Sampling time.* The minimum sampling time for each run shall be 1 hour in which either an integrated sample or a minimum of four grab samples shall be taken. If grab sampling is used, then the samples shall be taken at approximately equal intervals in time, such as 15-minute intervals during the run.

(B) *Mass rate of TOC or total organic regulated material.* The mass rate of either TOC (minus methane and ethane) or total organic regulated material (E_i, E_o) shall be computed as applicable.

(*1*) Equations 4 and 5 shall be used.

$$E_i = K_2\left(\sum_{j=1}^{n} C_{ij}M_{ij}\right)Q_i \qquad \text{[Eq. 4]}$$

$$E_o = K_2\left(\sum_{j=1}^{n} C_{oj}M_{oj}\right)Q_o \qquad \text{[Eq. 5]}$$

Where:

E_i, E_o = Emission rate of TOC (minus methane and ethane) (E_{TOC}) or emission rate of total organic regulated material (E_{RM}) in the sample at the inlet and outlet of the control device, respectively, dry basis, kilogram per hour.

K_2 = Constant, 2.494×10^{-6} (parts per million)$^{-1}$ (gram-mole per standard cubic meter) (kilogram per gram) (minute per hour), where standard temperature (gram-mole per standard cubic meter) is 20 °C.

n = Number of components in the sample.

C_{ij}, C_{oj} = Concentration on a dry basis of organic compound j in parts per million by volume of the gas stream at the inlet and outlet of the control device, respectively. If the TOC emission rate is being calculated, C_{ij} and C_{oj} include all organic compounds measured minus methane and ethane; if the total organic regulated material emissions rate is being calculated, only organic regulated material are included.

M_{ij}, M_{oj} = Molecular weight of organic compound j, gram per gram-mole, of the gas stream at the inlet and outlet of the control device, respectively.

Q_i, Q_o = Process vent flow rate, dry standard cubic meter per minute, at a temperature of 20° C, at the inlet and outlet of the control device, respectively.

(*2*) Where the mass rate of TOC is being calculated, all organic compounds (minus methane and ethane) measured by method 18 of 40 CFR part 60, appendix A, are summed using Equations 4 and 5 in paragraph (e)(2)(iv)(B)(*1*) of this section.

(*3*) Where the mass rate of total organic regulated material is being calculated, only the species comprising the regulated material shall be summed using Equations 4 and 5 in paragraph (e)(2)(iv)(B)(*1*) of this section.

(C) *Percent reduction in TOC or total organic regulated material for continuous unit operations and a combination of both continuous and batch unit operations.* For continuous unit operations and for a combination of both continuous and batch unit operations, the percent reduction in TOC (minus methane and ethane) or total organic regulated material shall be calculated using Equation 6.

$$R = \frac{E_i - E_o}{E_i}(100) \qquad \text{[Eq. 6]}$$

Where:

R = Control efficiency of control device, percent.

E_i = Mass rate of TOC (minus methane and ethane) or total organic regulated material at the inlet to the control device as calculated under paragraph (e)(2)(iv)(B) of this section, kilograms TOC per hour or kilograms organic regulated material per hour.

E_o = Mass rate of TOC (minus methane and ethane) or total organic regulated material at the outlet of the control device, as calculated under paragraph (e)(2)(iv)(B) of this section, kilograms TOC per hour or kilograms total organic regulated material per hour.

(D) *Vent stream introduced with combustion air or as secondary fuel.* If the vent stream entering a boiler or process heater with a design capacity less than 44 megawatts is introduced with the combustion air or as a secondary fuel, the weight-percent reduction of total organic regulated material or TOC (minus methane and ethane) across the device shall be determined by comparing the TOC (minus methane and ethane) or total organic regulated material in all combusted vent streams and primary and secondary fuels with the TOC (minus methane and ethane) or total organic regulated material exiting the combustion device, respectively.

(E) *Transfer racks.* Method 25A of 40 CFR part 60, appendix A, may also be used for the purpose of determining compliance with the percent reduction requirement for transfer racks.

(*1*) If Method 25A of 40 CFR part 60, appendix A, is used to measure the concentration of organic compounds (C_{TOC}), the principal organic regulated material in the vent stream shall be used as the calibration gas.

(*2*) An emission testing interval shall consist of each 15-minute period during the performance test. For each interval, a reading from each measurement shall be recorded.

(*3*) The average organic compound concentration and the volume measurement shall correspond to the same emissions testing interval.

(*4*) The mass at the inlet and outlet of the control device during each testing interval shall be calculated using Equation 7.

$$M_j = FKV_sC_t \qquad \text{[Eq. 7]}$$

Where:

M_j = Mass of organic compounds emitted during testing interval j, kilograms.

F = 10^{-6} = Conversion factor, (cubic meters regulated material per cubic meters air) * (parts per million by volume)$^{-1}$.

K = Density, kilograms per standard cubic meter organic regulated material.

= 659 kilograms per standard cubic meter organic regulated material. (Note: The density term cancels out when the percent reduction is calculated. Therefore, the density used has no effect. The density of hexane is given so that it can be used to maintain the units of M_j.)

V_s = Volume of air-vapor mixture exhausted at standard conditions, 20 °C and 760 millimeters mercury, standard cubic meters.

C_t = Total concentration of organic compounds (as measured) at the exhaust vent, parts per million by volume, dry basis.

(*5*) The organic compound mass emission rates at the inlet and outlet of the control device shall be calculated using Equations 8 and 9 as follows:

$$E_i = \frac{\sum_{j=1}^{n} M_{ij}}{T} \qquad \text{[Eq. 8]}$$

owner or operator to conduct a performance test of a control device, or a halogen reduction device, an owner or operator shall conduct that performance test using the procedures in paragraphs (e)(2)(i) through (iv) of this section, as applicable. The regulated material concentration and percent reduction may be measured as either total organic regulated material or as TOC minus methane and ethane according to the procedures specified.

(i) *Selection of sampling sites.* Method 1 or 1A of 40 CFR part 60, appendix A, as appropriate, shall be used for selection of the sampling sites.

(A) For determination of compliance with a percent reduction requirement of total organic regulated material or TOC, sampling sites shall be located as specified in paragraphs (e)(2)(i)(A)(*1*) and (e)(2)(i)(A)(*2*) of this section, and at the outlet of the control device.

(*1*) With the exceptions noted below in paragraphs (e)(2)(i)(A)(*2*) and (*3*), the control device inlet sampling site shall be located at the exit from the unit operation before any control device.

(*2*) For process vents from continuous unit operations at affected sources in subcategories where the applicability criteria includes a TRE index value, the control device inlet sampling site shall be located after the final recovery device.

(*3*) If a vent stream is introduced with the combustion air or as a secondary fuel into a boiler or process heater with a design capacity less than 44 megawatts, selection of the location of the inlet sampling sites shall ensure the measurement of total organic regulated material or TOC (minus methane and ethane) concentrations, as applicable, in all vent streams and primary and secondary fuels introduced into the boiler or process heater.

(B) For determination of compliance with a parts per million by volume total regulated material or TOC limit in a referencing subpart, the sampling site shall be located at the outlet of the control device.

(ii) *Gas volumetric flow rate.* The gas volumetric flow rate shall be determined using Method 2, 2A, 2C, or 2D of 40 CFR part 60, appendix A, as appropriate.

(iii) *Total organic regulated material or TOC concentration.* To determine compliance with a parts per million by volume total organic regulated material or TOC (minus methane and ethane) limit, the owner or operator shall use Method 18 of 40 CFR part 60, appendix A, to measure either TOC minus methane and ethane or total organic regulated material, as applicable. Alternatively, any other method or data that have been validated according to the applicable procedures in Method 301 of appendix A of 40 CFR part 63, may be used. Method 25A of 40 CFR part 60, appendix A may be used for transfer racks as detailed in paragraph (e)(2)(iii)(D) of this section. The procedures specified in paragraphs (e)(2)(iii)(A) through (D) of this section shall be used to calculate parts per million by volume concentration, corrected to 3 percent oxygen if a combustion device is the control device and supplemental combustion air is used to combust the emissions.

(A) *Sampling time.* For continuous unit operations and for a combination of both continuous and batch unit operations, the minimum sampling time for each run shall be 1 hour in which either an integrated sample or a minimum of four grab samples shall be taken. If grab sampling is used, then the samples shall be taken at approximately equal intervals in time, such as 15 minute intervals during the run.

(B) *Concentration calculation.* The concentration of either TOC (minus methane or ethane) or total organic regulated material shall be calculated according to paragraph (e)(2)(iii)(B) (*1*) or (*2*) of this section.

(*1*) The TOC concentration (C_{TOC}) is the sum of the concentrations of the individual components and shall be computed for each run using Equation 2.

$$C_{TOC} = \sum_{i=1}^{x} \frac{\left(\sum_{j=1}^{n} C_{ji}\right)}{x} \qquad \text{[Eq. 2]}$$

Where:

C_{TOC} = Concentration of TOC (minus methane and ethane), dry basis, parts per million by volume.

x = Number of samples in the sample run.

n = Number of components in the sample.

C_{ji} = Concentration of sample components j of sample I, dry basis, parts per million by volume.

(*2*) The total organic regulated material (C_{REG}) shall be computed according to Equation 2 in paragraph (e)(2)(iii)(B)(*1*) of this section except that only the regulated species shall be summed.

(C) *Concentration correction calculation.* The concentration of TOC or total organic regulated material, as applicable, shall be corrected to 3 percent oxygen if a combustion device is the control device and supplemental combustion air is used to combust the emissions.

(*1*) The emission rate correction factor (or excess air), integrated sampling and analysis procedures of Method 3B of 40 CFR part 60, appendix A, shall be used to determine the oxygen concentration. The sampling site shall be the same as that of the organic regulated material or organic compound samples, and the samples shall be taken during the same time that the organic regulated material or organic compound samples are taken.

(*2*) The concentration corrected to 3 percent oxygen (C_c) shall be computed using Equation 3.

$$C_c = C_m \left(\frac{17.9}{20.9 - \%O_{2d}} \right) \qquad \text{[Eq. 3]}$$

Where:

C_c = Concentration of TOC or organic regulated material corrected to 3 percent oxygen, dry basis, parts per million by volume.

C_m = Concentration of TOC (minus methane and ethane) or organic regulated material, dry basis, parts per million by volume.

$\%O_{2d}$ = Concentration of oxygen, dry basis, percentage by volume.

(D) *Transfer racks.* Method 25A of 40 CFR part 60, appendix A may be used for the purpose of determining compliance with a parts per million by volume limit for transfer racks. If Method 25A of 40 CFR part 60, appendix A is used, the procedures specified in paragraphs (e)(2)(iii)(D) (*1*) through (*4*) of this section shall be used to calculate the concentration of organic compounds (C_{TOC}):

(*1*) The principal organic regulated material in the vent stream shall be used as the calibration gas.

(*2*) The span value for Method 25A of 40 CFR part 60, appendix A, shall be between 1.5 and 2.5 times the concentration being measured.

(*3*) Use of Method 25A of 40 CFR part 60, appendix A, is acceptable if the response from the high-level calibration gas is at least 20 times the standard deviation of the response from the zero calibration gas when the instrument is zeroed on the most sensitive scale.

(*4*) The concentration of TOC shall be corrected to 3 percent oxygen using the procedures and Equation 3 in paragraph (e)(2)(iii)(C)(*2*) of this section if a combustion device is the control device and supplemental combustion air is used to combust emissions.

(iv) *Percent reduction calculation.* To determine compliance with a percent reduction requirement, the owner or operator shall use Method 18 of 40 CFR part 60, appendix A; alternatively, any other method or data that have been validated according to the applicable

performed using the methods specified in § 63.987(b);

(ii) For flares used to replace an existing final recovery device that is used on an applicable process vent, the owner or operator shall comply with the applicable provisions in a referencing subpart and in this subpart;

(iii) For incinerators, boilers, or process heaters used to replace an existing control device, a performance test shall be performed, using the methods specified in § 63.997;

(iv) For absorbers, condensers, or carbon adsorbers used to replace an existing control device on a process vent or a transfer rack, a performance test shall be performed, using the methods specified in § 63.997;

(v) For absorbers, condensers, or carbon adsorbers used to replace an existing final recovery device on a process vent, the owner or operator shall comply with the applicable provisions of a referencing subpart and this subpart;

(d) *Performance testing facilities.* If required to do performance testing, the owner or operator of each new regulated source and, at the request of the Administrator, the owner or operator of each existing regulated source, shall provide performance testing facilities as specified in paragraphs (d)(1) through (5) of this section.

(1) Sampling ports adequate for test methods applicable to such source. This includes, as applicable, the requirements specified in (d)(1)(i) and (ii) of this section.

(i) Constructing the air pollution control system such that volumetric flow rates and pollutant emission rates can be accurately determined by applicable test methods and procedures; and

(ii) Providing a stack or duct free of cyclonic flow during performance tests, as demonstrated by applicable test methods and procedures;

(2) Safe sampling platform(s);

(3) Safe access to sampling platform(s);

(4) Utilities for sampling and testing equipment; and

(5) Any other facilities that the Administrator deems necessary for safe and adequate testing of a source.

(e) *Performance test procedures.* Where §§ 63.985 through 63.995 require the owner or operator to conduct a performance test of a control device or a halogen reduction device, the owner or operator shall follow the requirements of paragraphs (e)(1)(i) through (v) of this section, as applicable.

(1) *General procedures.* (i) *Continuous unit operations.* For continuous unit operations, performance tests shall be conducted at maximum representative operating conditions for the process, unless the Administrator specifies or approves alternate operating conditions. During the performance test, an owner or operator may operate the control or halogen reduction device at maximum or minimum representative operating conditions for monitored control or halogen reduction device parameters, whichever results in lower emission reduction. Operations during periods of start-up, shutdown, and malfunction shall not constitute representative conditions for the purpose of a performance test.

(ii) [Reserved]

(iii) *Combination of both continuous and batch unit operations.* For a combination of both continuous and batch unit operations, performance tests shall be conducted at maximum representative operating conditions. For the purpose of conducting a performance test on a combined vent stream, maximum representative operating conditions shall be when batch emission episodes are occurring that result in the highest organic HAP emission rate (for the combined vent stream) that is achievable during the 6-month period that begins 3 months before and ends 3 months after the compliance assessment (e.g. TRE calculation, performance test) without causing any of the situations described in paragraphs (e)(1)(iii)(A) through (C) of this section.

(A) Causing damage to equipment;

(B) Necessitating that the owner or operator make product that does not meet an existing specification for sale to a customer; or

(C) Necessitating that the owner or operator make product in excess of demand.

(iv) *Alternatives to performance test requirements.* Performance tests shall be conducted and data shall be reduced in accordance with the test methods and procedures set forth in this subpart, in each relevant standard, and, if required, in applicable appendices of 40 CFR parts 51, 60, 61, and 63 unless the Administrator specifies one of the provisions in paragraphs (e)(1)(iv)(A) through (E) of this section.

(A) Specifies or approves, in specific cases, the use of a test method with minor changes in methodology; or

(B) Approves the use of an alternative test method, the results of which the Administrator has determined to be adequate for indicating whether a specific regulated source is in compliance. The alternate method or data shall be validated using the applicable procedures of Method 301 of appendix A of 40 CFR part 63; or

(C) Approves shorter sampling times and smaller sample volumes when necessitated by process variables or other factors; or

(D) Waives the requirement for the performance test as specified in paragraph (b)(2) of this section because the owner or operator of a regulated source has demonstrated by other means to the Administrator's satisfaction that the regulated source is in compliance with the relevant standard; or

(E) Approves the use of an equivalent method.

(v) *Performance test runs.* Except as provided in paragraphs (e)(1)(v)(A) and (B) of this section, each performance test shall consist of three separate runs using the applicable test method. Each run shall be conducted for at least 1 hour and under the conditions specified in this section. For the purpose of determining compliance with an applicable standard, the arithmetic means of results of the three runs shall apply. In the event that a sample is accidentally lost or conditions occur in which one of the three runs must be discontinued because of forced shutdown, failure of an irreplaceable portion of the sample train, extreme meteorological conditions, or other circumstances, beyond the owner or operator's control, compliance may, upon the Administrator's approval, be determined using the arithmetic mean of the results of the two other runs.

(A) For control devices used to control emissions from transfer racks (except low throughput transfer racks that are capable of continuous vapor processing but do not handle continuous emissions or multiple loading arms of a transfer rack that load simultaneously), each run shall represent at least one complete tank truck or tank car loading period, during which regulated materials are loaded, and samples shall be collected using integrated sampling or grab samples taken at least four times per hour at approximately equal intervals of time, such as 15-minute intervals.

(B) For intermittent vapor processing systems used for controlling transfer rack emissions (except low throughput transfer racks that do not handle continuous emissions or multiple loading arms of a transfer rack that load simultaneously), each run shall represent at least one complete control device cycle, and samples shall be collected using integrated sampling or grab samples taken at least four times per hour at approximately equal intervals of time, such as 15-minute intervals.

(2) *Specific procedures.* Where §§ 63.985 through 63.995 require the

upon a prior performance test meeting the specifications of § 63.997(b)(1) or a prior TRE index value determination, as applicable, or upon existing ranges or limits established under a referencing subpart. Where the regeneration stream flow and carbon bed temperature are monitored, the range shall be in terms of the total regeneration stream flow per regeneration cycle and the temperature of the carbon bed determined within 15 minutes of the completion of the regeneration cooling cycle.

(d) *Alternatives to monitoring requirements.* (1) *Alternatives to the continuous operating parameter monitoring and recordkeeping provisions.* An owner or operator may request approval to use alternatives to the continuous operating parameter monitoring and recordkeeping provisions listed in §§ 63.988(c), 63.990(c), 63.993(c), 63.994(c), 63.998(a)(2) through (4), 63.998(c)(2) and (3), as specified in § 63.999(d)(1).

(2) *Monitoring a different parameter than those listed.* An owner or operator may request approval to monitor a different parameter than those established in paragraph (c)(6) of this section or to set unique monitoring parameters if directed by §§ 63.994(c)(2) or 63.995(c), as specified in § 63.999(d)(2).

§ 63.997 Performance test and compliance assessment requirements for control devices.

(a) *Performance tests and flare compliance assessments.* Where §§ 63.985 through 63.995 require, or the owner or operator elects to conduct, a performance test of a control device or a halogen reduction device, or a compliance assessment for a flare, the requirements of paragraphs (b) through (d) of this section apply.

(b) *Prior test results and waivers.* Initial performance tests and initial flare compliance assessments are required only as specified in this subpart or a referencing subpart.

(1) Unless requested by the Administrator, an owner or operator is not required to conduct a performance test or flare compliance assessment under this subpart if a prior performance test or compliance assessment was conducted using the same methods specified in § 63.997(e) or § 63.987(b)(3), as applicable, and either no process changes have been made since the test, or the owner or operator can demonstrate that the results of the performance test or compliance demonstration, with or without adjustments, reliably demonstrate compliance despite process changes. An owner or operator may request permission to substitute a prior performance test or compliance assessment by written application to the Administrator as specified in § 63.999(a)(1)(iv).

(2) Individual performance tests and flare compliance assessments may be waived upon written application to the Administrator, per § 63.999(a)(1)(iii), if, in the Administrator's judgment, the source is meeting the relevant standard(s) on a continuous basis, the source is being operated under an extension or waiver of compliance, or the owner or operator has requested an extension or waiver of compliance and the Administrator is still considering that request.

(3) Approval of any waiver granted under this section shall not abrogate the Administrator's authority under the Act or in any way prohibit the Administrator from later canceling the waiver. The cancellation will be made only after notification is given to the owner or operator of the source.

(c) *Performance tests and flare compliance assessments schedule.* (1) Unless a waiver of performance testing or flare compliance assessment is obtained under this section or the conditions of a referencing subpart, the owner or operator shall perform such tests as specified in paragraphs (c)(1)(i) through (vii) of this section.

(i) Within 180 days after the effective date of a relevant standard for a new source that has an initial start-up date before the effective date of that standard; or

(ii) Within 180 days after initial start-up for a new source that has an initial start-up date after the effective date of a relevant standard; or

(iii) Within 180 days after the compliance date specified in a referencing subpart for an existing source, or within 180 days after start-up of an existing source if the source begins operation after the effective date of the relevant emission standard; or

(iv) Within 180 days after the compliance date for an existing source subject to an emission standard established pursuant to section 112(f) of the Act; or

(v) Within 180 days after the termination date of the source's extension of compliance or a waiver of compliance for an existing source that obtains an extension of compliance under § 63.1112(a), or waiver of compliance under 40 CFR 61.11; or

(vi) Within 180 days after the compliance date for a new source, subject to an emission standard established pursuant to section 112(f) of the Act, for which construction or reconstruction is commenced after the proposal date of a relevant standard established pursuant to section 112(d) of the Act but before the proposal date of the relevant standard established pursuant to section 112(f); or

(vii) When the promulgated emission standard in a referencing subpart is more stringent than the standard that was proposed, the owner or operator of a new or reconstructed source subject to that standard for which construction or reconstruction is commenced between the proposal and promulgation dates of the standard shall comply with performance testing requirements within 180 days after the standard's effective date, or within 180 days after start-up of the source, whichever is later. If a promulgated standard in a referencing subpart is more stringent than the proposed standard, the owner or operator may choose to demonstrate compliance initially with either the proposed or the promulgated standard. If the owner or operator chooses to comply with the proposed standard initially, the owner or operator shall conduct a second performance test within 3 years and 180 days after the effective date of the standard, or after start-up of the source, whichever is later, to demonstrate compliance with the promulgated standard.

(2) The Administrator may require an owner or operator to conduct performance tests and compliance assessments at the regulated source at any time when the action is authorized by section 114 of the Act.

(3) Unless already permitted by the applicable title V permit, if an owner or operator elects to use a recovery device to replace an existing control device at a later date, or elects to use a different flare, nonflare control device or recovery device to replace an existing flare, nonflare control device or final recovery device at a later date, the owner or operator shall notify the Administrator, either by amendment of the regulated source's title V permit or, if title V is not applicable, by submission of the notice specified in § 63.999(c)(7) before implementing the change. Upon implementing the change, a compliance demonstration or performance test shall be performed according to the provisions of paragraphs (c)(3)(i) through (v) of this section, as applicable, within 180 days. The compliance assessment report shall be submitted to the Administrator within 60 days of completing the determination, as provided in § 63.999(a)(1)(ii).

(i) For flares used to replace an existing control device, a flare compliance demonstration shall be

of the liquid to gas (L/G) ratio prior to the applicable compliance date for the process unit of which it is part as specified in a referencing subpart, the owner or operator may determine gas stream flow by the method that had been utilized to comply with those regulations. A determination that was conducted prior to that compliance date may be utilized to comply with this subpart if it is still representative.

(D) The owner or operator may prepare and implement a gas stream flow determination plan that documents an appropriate method that will be used to determine the gas stream flow. The plan shall require determination of gas stream flow by a method that will at least provide a value for either a representative or the highest gas stream flow anticipated in the scrubber during representative operating conditions other than start-ups, shutdowns, or malfunctions. The plan shall include a description of the methodology to be followed and an explanation of how the selected methodology will reliably determine the gas stream flow, and a description of the records that will be maintained to document the determination of gas stream flow. The owner or operator shall maintain the plan as specified in a referencing subpart.

(2) Where a halogen reduction device other than a scrubber is used, the owner or operator shall follow the procedures specified in a referencing subpart in order to establish monitoring parameters.

§ 63.995 Other control devices.

(a) *Other control device equipment and operating requirements.* (1) Owners or operators using a control device other than one listed in §§ 63.985 through 63.990 to meet a weight-percent emission reduction or parts per million by volume outlet concentration requirement specified in a referencing subpart shall meet the requirements of this section.

(2) Other control devices used to comply with the provisions of a referencing subpart and this subpart shall be operated at all times when emissions are vented to them.

(b) *Other control device performance test requirements.* An owner or operator using a control device other than those specified in §§ 63.987 through 63.990 to comply with a performance level specified in a referencing subpart, shall perform an initial performance test according to the procedures in § 63.997. Performance test records shall be kept as specified in § 63.998(a)(2) and a performance test report shall be submitted as specified in § 63.999(a)(2).

(c) *Other control device monitoring requirements.* If an owner or operator uses a control device other than those listed in this subpart, the owner or operator shall submit a description of planned monitoring, recordkeeping and reporting procedures as specified in a referencing subpart. The Administrator will approve, deny, or modify based on the reasonableness of the proposed monitoring, reporting and recordkeeping requirements as part of the review of the submission or permit application or by other appropriate means.

§ 63.996 General monitoring requirements for control and recovery devices.

(a) *General monitoring requirements applicability.* (1) This section applies to the owner or operator of a regulated source required to monitor under this subpart.

(2) Flares subject to § 63.987(c) are not subject to the requirements of this section.

(3) Flow indicators are not subject to the requirements of this section.

(b) *Conduct of monitoring.* (1) Monitoring shall be conducted as set forth in this section and in the relevant sections of this subpart unless the provision in either paragraph (b)(1)(i) or (ii) of this section applies.

(i) The Administrator specifies or approves the use of minor changes in methodology for the specified monitoring requirements and procedures; or

(ii) The Administrator approves the use of alternatives to any monitoring requirements or procedures as provided in the referencing subpart or paragraph (d) of this section.

(2) When one CPMS is used as a backup to another CPMS, the owner or operator shall report the results from the CPMS used to meet the monitoring requirements of this subpart. If both such CPMS's are used during a particular reporting period to meet the monitoring requirements of this subpart, then the owner or operator shall report the results from each CPMS for the time during the six month period that the instrument was relied upon to demonstrate compliance.

(c) *Operation and maintenance of continuous parameter monitoring systems.* (1) All monitoring equipment shall be installed, calibrated, maintained, and operated according to manufacturer's specifications or other written procedures that provide adequate assurance that the equipment would reasonably be expected to monitor accurately.

(2) The owner or operator of a regulated source shall maintain and operate each CPMS as specified in this section, or in a relevant subpart, and in a manner consistent with good air pollution control practices.

(i) The owner or operator of a regulated source shall ensure the immediate repair or replacement of CPMS parts to correct "routine" or otherwise predictable CPMS malfunctions. The necessary parts for routine repairs of the affected equipment shall be readily available.

(ii) If under the referencing subpart, an owner or operator has developed a start-up, shutdown, and malfunction plan, the plan is followed, and the CPMS is repaired immediately, this action shall be recorded as specified in § 63.998(c)(1)(ii)(E).

(iii) The Administrator's determination of whether acceptable operation and maintenance procedures are being used for the CPMS will be based on information that may include, but is not limited to, review of operation and maintenance procedures, operation and maintenance records as specified in § 63.998(c)(1)(i) and (ii), manufacturer's recommendations and specifications, and inspection of the CPMS.

(3) All CPMS's shall be installed and operational, and the data verified as specified in this subpart either prior to or in conjunction with conducting performance tests. Verification of operational status shall, at a minimum, include completion of the manufacturer's written specifications or recommendations for installation, operation, and calibration of the system or other written procedures that provide adequate assurance that the equipment would reasonably be expected to monitor accurately.

(4) All CPMS's shall be installed such that representative measurements of parameters from the regulated source are obtained.

(5) In accordance with the referencing subpart, except for system breakdowns, repairs, maintenance periods, instrument adjustments, or checks to maintain precision and accuracy, calibration checks, and zero and span adjustments, all continuous parameter monitoring systems shall be in continuous operation when emissions are being routed to the monitored device.

(6) The owner or operator shall establish a range for monitored parameters that indicates proper operation of the control or recovery device. In order to establish the range, the information required in § 63.999(b)(3) shall be submitted in the Notification of Compliance Status or the operating permit application or amendment. The range may be based

(2) Where a condenser is used, a condenser exit (product side) temperature monitoring device capable of providing a continuous record shall be used.

(3) Where a carbon adsorber is used, an integrating regeneration stream flow monitoring device having an accuracy of ±10 percent or better, capable of recording the total regeneration stream mass or volumetric flow for each regeneration cycle; and a carbon bed temperature monitoring device, capable of recording the carbon bed temperature after each regeneration and within 15 minutes of completing any cooling cycle, shall be used.

§ 63.991 [Reserved]

§ 63.992 [Reserved]

§ 63.993 Absorbers, condensers, carbon adsorbers and other recovery devices used as final recovery devices.

(a) *Final recovery device equipment and operating requirements.* (1) Owners or operators using a final recovery device to maintain a TRE above a level specified in a referencing subpart shall meet the requirements of this section.

(2) Recovery devices used to comply with the provisions of a referencing subpart and this subpart shall be operated at all times when emissions are vented to them.

(b) *Recovery device performance test requirements.* There are no performance test requirements for recovery devices. TRE index value determination information shall be recorded as specified in § 63.998(a)(3).

(c) *Recovery device monitoring requirements.* (1) Where an absorber is the final recovery device in the recovery system and the TRE index value is between the level specified in a referencing subpart and 4.0, either an organic monitoring device capable of providing a continuous record or a scrubbing liquid temperature monitoring device and a specific gravity monitoring device, each capable of providing a continuous record, shall be used. If the difference between the specific gravity of the saturated scrubbing fluid and specific gravity of the fresh scrubbing fluid is less than 0.02 specific gravity units, an organic monitoring device capable of providing a continuous record shall be used. Monitoring results shall be recorded as specified in § 63.998(b) and (c), as applicable. General requirements for monitoring and continuous parameter monitoring systems are contained in § 63.996.

(2) Where a condenser is the final recovery device in the recovery system and the TRE index value is between the level specified in a referencing subpart and 4.0, an organic monitoring device capable of providing a continuous record or a condenser exit (product side) temperature monitoring device capable of providing a continuous record shall be used. Monitoring results shall be recorded as specified in § 63.998(b) and (c), as applicable. General requirements for monitoring and continuous parameter monitoring systems are contained in a referencing subpart and § 63.996.

(3) Where a carbon adsorber is the final recovery device in the recovery system and the TRE index value is between the level specified in a referencing subpart and 4.0, an organic monitoring device capable of providing a continuous record or an integrating regeneration stream flow monitoring device having an accuracy of ±10 percent or better, capable of recording the total regeneration stream mass or volumetric flow for each regeneration cycle; and a carbon-bed temperature monitoring device, capable of recording the carbon-bed temperature after each regeneration and within 15 minutes of completing any cooling cycle shall be used. Monitoring results shall be recorded as specified in § 63.998(b) and (c), as applicable. General requirements for monitoring and continuous parameter monitoring systems are contained in a referencing subpart and § 63.996.

(4) If an owner or operator uses a recovery device other than those listed in this subpart, the owner or operator shall submit a description of planned monitoring, reporting and recordkeeping procedures as specified in a referencing subpart. The Administrator will approve, deny, or modify based on the reasonableness of the proposed monitoring, reporting and recordkeeping requirements as part of the review of the submission or permit application or by other appropriate means.

§ 63.994 Halogen scrubbers and other halogen reduction devices.

(a) *Halogen scrubber and other halogen reduction device equipment and operating requirements.* (1) An owner or operator of a halogen scrubber or other halogen reduction device subject to this subpart shall reduce the overall emissions of hydrogen halides and halogens by the control device performance level specified in a referencing subpart.

(2) Halogen scrubbers and other halogen reduction devices used to comply with the provisions of a referencing subpart and this subpart shall be operated at all times when emissions are vented to them.

(b) *Halogen scrubber and other halogen reduction device performance test requirements.* (1) An owner or operator of a combustion device followed by a halogen scrubber or other halogen reduction device to control halogenated vent streams in accordance with a referencing subpart and this subpart shall conduct an initial performance test to determine compliance with the control efficiency or emission limits for hydrogen halides and halogens according to the procedures in § 63.997. Performance test records shall be kept as specified in § 63.998(a)(2) and a performance test report shall be submitted as specified in § 63.999(a)(2).

(2) An owner or operator of a halogen scrubber or other halogen reduction technique used to reduce the vent stream halogen atom mass emission rate prior to a combustion device to comply with a performance level specified in a referencing subpart shall determine the halogen atom mass emission rate prior to the combustion device according to the procedures specified in the referencing subpart. Records of the halogen concentration in the vent stream shall be generated as specified in § 63.998(a)(4).

(c) *Halogen scrubber and other halogen reduction device monitoring requirements.* (1) Where a halogen scrubber is used, the monitoring equipment specified in paragraphs (c)(1)(i) and (ii) of this section is required for the scrubber. Monitoring results shall be recorded as specified in § 63.998(b) and (c), as applicable. General requirements for monitoring and continuous parameter monitoring systems are contained in a referencing subpart and § 63.996.

(i) A pH monitoring device capable of providing a continuous record shall be installed to monitor the pH of the scrubber effluent.

(ii) A flow meter capable of providing a continuous record shall be located at the scrubber influent for liquid flow. Gas stream flow shall be determined using one of the procedures specified in paragraphs (c)(1)(ii)(A) through (D) of this section.

(A) The owner or operator may determine gas stream flow using the design blower capacity, with appropriate adjustments for pressure drop.

(B) The owner or operator may measure the gas stream flow at the scrubber inlet.

(C) If the scrubber is subject to regulations in 40 CFR parts 264 through 266 that have required a determination

mole at 25 °C and 760 millimeters of mercury (30 inches of mercury).

(iii) The actual exit velocity of a flare shall be determined by dividing the volumetric flowrate (in units of standard temperature and pressure), as determined by Methods 2, 2A, 2C, or 2D of 40 CFR part 60, appendix A as appropriate; by the unobstructed (free) cross sectional area of the flare tip.

(iv) Flare flame or pilot monitors, as applicable, shall be operated during any flare compliance assessment.

(c) *Flare monitoring requirements.* Where a flare is used, the following monitoring equipment is required: a device (including but not limited to a thermocouple, ultra-violet beam sensor, or infrared sensor) capable of continuously detecting that at least one pilot flame or the flare flame is present. Flare flame monitoring and compliance records shall be kept as specified in § 63.998(a)(1) and reported as specified in § 63.999(c)(8).

§ 63.988 Incinerators, boilers, and process heaters.

(a) *Equipment and operating requirements.* (1) Owners or operators using incinerators, boilers, or process heaters to meet a weight-percent emission reduction or parts per million by volume outlet concentration requirement specified in a referencing subpart shall meet the requirements of this section.

(2) Incinerators, boilers, or process heaters used to comply with the provisions of a referencing subpart and this subpart shall be operated at all times when emissions are vented to them.

(3) For boilers and process heaters, the vent stream shall be introduced into the flame zone of the boiler or process heater.

(b) *Performance test requirements.* (1) Except as specified in § 63.997(b), and paragraph (b)(2) of this section, the owner or operator shall conduct an initial performance test of any incinerator, boiler, or process heater used to comply with the provisions of a referencing subpart and this subpart according to the procedures in § 63.997. Performance test records shall be kept as specified in § 63.998(a)(2) and a performance test report shall be submitted as specified in § 63.999(a)(2). As provided in § 63.985(b)(1), a design evaluation may be used as an alternative to the performance test for storage vessels and low throughput transfer rack controls. As provided in § 63.986(b), no performance test is required for equipment leaks.

(2) An owner or operator is not required to conduct a performance test when any of the control devices specified in paragraphs (b)(2)(i) through (iv) of this section are used.

(i) A hazardous waste incinerator for which the owner or operator has been issued a final permit under 40 CFR part 270 and complies with the requirements of 40 CFR part 264, subpart O, or has certified compliance with the interim status requirements of 40 CFR part 265, subpart O;

(ii) A boiler or process heater with a design heat input capacity of 44 megawatts (150 million British thermal units per hour) or greater;

(iii) A boiler or process heater into which the vent stream is introduced with the primary fuel or is used as the primary fuel; or

(iv) A boiler or process heater burning hazardous waste for which the owner or operator meets the requirements specified in paragraph (b)(2)(iv)(A) or (B) of this section.

(A) The boiler or process heater has been issued a final permit under 40 CFR part 270 and complies with the requirements of 40 CFR part 266, subpart H; or

(B) The boiler or process heater has certified compliance with the interim status requirements of 40 CFR part 266, subpart H.

(c) *Incinerator, boiler, and process heater monitoring requirements.* Where an incinerator, boiler, or process heater is used, a temperature monitoring device capable of providing a continuous record that meets the provisions specified in paragraph (c)(1), (2), or (3) of this section is required. Any boiler or process heater in which all vent streams are introduced with primary fuel or are used as the primary fuel is exempt from monitoring. Monitoring results shall be recorded as specified in § 63.998(b) and (c), as applicable. General requirements for monitoring and continuous parameter monitoring systems are contained in the referencing subpart and § 63.996.

(1) Where an incinerator other than a catalytic incinerator is used, a temperature monitoring device shall be installed in the fire box or in the ductwork immediately downstream of the fire box in a position before any substantial heat exchange occurs.

(2) Where a catalytic incinerator is used, temperature monitoring devices shall be installed in the gas stream immediately before and after the catalyst bed.

(3) Where a boiler or process heater of less than 44 megawatts (150 million British thermal units per hour) design heat input capacity is used and the regulated vent stream is not introduced as or with the primary fuel, a temperature monitoring device shall be installed in the fire box.

§ 63.989 [Reserved]

§ 63.990 Absorbers, condensers, and carbon adsorbers used as control devices.

(a) *Equipment and operating requirements.* (1) Owners or operators using absorbers, condensers, or carbon adsorbers to meet a weight-percent emission reduction or parts per million by volume outlet concentration requirement specified in a referencing subpart shall meet the requirements of this section.

(2) Absorbers, condensers, and carbon adsorbers used to comply with the provisions of a referencing subpart and this subpart shall be operated at all times when emissions are vented to them.

(b) *Performance test requirements.* Except as specified in § 63.997(b), the owner or operator shall conduct an initial performance test of any absorber, condenser, or carbon adsorber used as a control device to comply with the provisions of the referencing subpart and this subpart according to the procedures in § 63.997. Performance test records shall be kept as specified in § 63.998(a)(2) and a performance test report shall be submitted as specified in § 63.999(a)(2). As provided in § 63.985(b)(1), a design evaluation may be used as an alternative to the performance test for storage vessels and low throughput transfer rack controls. As provided in § 63.986(b), no performance test is required to demonstrate compliance for equipment leaks.

(c) *Monitoring requirements.* Where an absorber, condenser, or carbon adsorber is used as a control device, either an organic monitoring device capable of providing a continuous record, or the monitoring devices specified in paragraphs (c)(1) through (3), as applicable, shall be used. Monitoring results shall be recorded as specified in § 63.998(b) and (c), as applicable. General requirements for monitoring and continuous parameter monitoring systems are contained in a referencing subpart and § 63.996.

(1) Where an absorber is used, a scrubbing liquid temperature monitoring device and a specific gravity monitoring device, each capable of providing a continuous record, shall be used. If the difference between the specific gravity of the saturated scrubbing fluid and specific gravity of the fresh scrubbing fluid is less than 0.02 specific gravity units, an organic monitoring device capable of providing a continuous record shall be used.

inlet stream and, if applicable, the desorption schedule, the regeneration stream pressure or temperature, and the flow rate of the regeneration stream. For vacuum desorption, pressure drop shall be included.

(E) For condensers, the design evaluation shall include the final temperature of the stream vapors, the type of condenser, and the design flow rate of the emission stream.

(ii) *Performance test.* A performance test, whether conducted to meet the requirements of this section, or to demonstrate compliance for a process vent or high throughput transfer rack as required by §§ 63.988(b), 63.990(b), or 63.995(b), is acceptable to demonstrate compliance with emission reduction requirements for storage vessels and transfer racks. The owner or operator is not required to prepare a design evaluation for the control device as described in paragraph (b)(1)(i) of this section if a performance test will be performed that meets the criteria specified in paragraphs (b)(1)(ii)(A) and (B) of this section.

(A) The performance test will demonstrate that the control device achieves greater than or equal to the required control device performance level specified in a referencing subpart for storage vessels or transfer racks; and

(B) The performance test meets the applicable performance test requirements and the results are submitted as part of the Notification of Compliance Status as specified in § 63.999(b)(2).

(2) *Exceptions.* A design evaluation or performance test is not required if the owner or operator uses a combustion device meeting the criteria in paragraph (b)(2)(i), (ii), (iii), or (iv) of this section.

(i) A boiler or process heater with a design heat input capacity of 44 megawatts (150 million British thermal units per hour) or greater.

(ii) A boiler or process heater burning hazardous waste for which the owner or operator meets the requirements specified in paragraph (b)(2)(ii)(A) or (B) of this section.

(A) The boiler or process heater has been issued a final permit under 40 CFR part 270 and complies with the requirements of 40 CFR part 266, subpart H, or

(B) The boiler or process heater has certified compliance with the interim status requirements of 40 CFR part 266, subpart H.

(iii) A hazardous waste incinerator for which the owner or operator meets the requirements specified in paragraph (b)(2)(iii)(A) or (B) of this section.

(A) The incinerator has been issued a final permit under 40 CFR part 270 and complies with the requirements of 40 CFR part 264, subpart O; or

(B) The incinerator has certified compliance with the interim status requirements of 40 CFR part 265, subpart O; or

(iv) A boiler or process heater into which the vent stream is introduced with the primary fuel.

(3) *Prior design evaluations or performance tests.* If a design evaluation or performance test is required in the referencing subpart or was previously conducted and submitted for a storage vessel or low throughput transfer rack, then a performance test or design evaluation is not required.

(c) *Nonflare control device monitoring requirements.* (1) The owner or operator shall submit with the Notification of Compliance Status, a monitoring plan containing the information specified in § 63.999(b)(2)(i) and (ii) to identify the parameters that will be monitored to assure proper operation of the control device.

(2) The owner or operator shall monitor the parameters specified in the Notification of Compliance Status or in the operating permit application or amendment. Records shall be generated as specified in § 63.998(d)(2)(i).

§ 63.986 Nonflare control devices used for equipment leaks only.

(a) *Equipment and operating requirements.* (1) Owners or operators using a nonflare control device to meet the applicable requirements of a referencing subpart for equipment leaks shall meet the requirements of this section.

(2) Control devices used to comply with the provisions of this subpart shall be operated at all times when emissions are vented to them.

(b) *Performance test requirements.* A performance test is not required for any nonflare control device used only to control emissions from equipment leaks.

(c) *Monitoring requirements.* Owners or operators of control devices that are used to comply only with the provisions of a referencing subpart for control of equipment leak emissions shall monitor these control devices to ensure that they are operated and maintained in conformance with their design. The owner or operator shall maintain the records as specified in § 63.998(d)(4).

§ 63.987 Flare requirements.

(a) *Flare equipment and operating requirements.* Flares subject to this subpart shall meet the performance requirements in 40 CFR 63.11(b) (General Provisions).

(b) *Flare compliance assessment.* (1) The owner or operator shall conduct an initial flare compliance assessment of any flare used to comply with the provisions of this subpart. Flare compliance assessment records shall be kept as specified in § 63.998(a)(1) and a flare compliance assessment report shall be submitted as specified in § 63.999(a)(2). An owner or operator is not required to conduct a performance test to determine percent emission reduction or outlet regulated material or total organic compound concentration when a flare is used.

(2) [Reserved]

(3) Flare compliance assessments shall meet the requirements specified in paragraphs (b)(3)(i) through (iv) of this section.

(i) Method 22 of appendix A of part 60 shall be used to determine the compliance of flares with the visible emission provisions of this subpart. The observation period is 2 hours, except for transfer racks as provided in (b)(3)(i)(A) or (B) of this section.

(A) For transfer racks, if the loading cycle is less than 2 hours, then the observation period for that run shall be for the entire loading cycle.

(B) For transfer racks, if additional loading cycles are initiated within the 2-hour period, then visible emissions observations shall be conducted for the additional cycles.

(ii) The net heating value of the gas being combusted in a flare shall be calculated using Equation 1:

$$H_T = K_1 \sum_{j=1}^{n} D_j H_j \qquad \text{[Eq. 1]}$$

Where:

H_T = Net heating value of the sample, megajoules per standard cubic meter; where the net enthalpy per mole of offgas is based on combustion at 25 °C and 760 millimeters of mercury (30 inches of mercury), but the standard temperature for determining the volume corresponding to one mole is 20 °C;

$K_1 = 1.740 \times 10^{-7}$ (parts per million by volume)$^{-1}$ (gram-mole per standard cubic meter) (megajoules per kilocalories), where the standard temperature for gram mole per standard cubic meter is 20 °C;

n = number of sample components;

D_j = Concentration of sample component j, in parts per million by volume on a wet basis, as measured for organics by Method 18 of part 60, appendix A and measured for hydrogen and carbon monoxide by American Society for Testing and Materials (ASTM) D1946–90; and

H_j = Net heat of combustion of sample component j, kilocalories per gram

be performed when the equipment is in regulated material service, or in use with any other detectable gas or vapor.

(4) Inspections of the closed vent system collecting regulated material from a transfer rack shall be performed only while a tank truck or railcar is being loaded or is otherwise pressurized to normal operating conditions with regulated material or any other detectable gas or vapor.

(d) *Closed vent system leak repair provisions.* The provisions of this paragraph apply to closed vent systems collecting regulated material from a regulated source.

(1) If there are visible, audible, or olfactory indications of leaks at the time of the annual visual inspections required by paragraph (b)(1)(i)(B) of this section, the owner or operator shall follow the procedure specified in either paragraph (d)(1)(i) or (ii) of this section.

(i) The owner or operator shall eliminate the leak.

(ii) The owner or operator shall monitor the equipment according to the procedures in paragraph (c) of this section.

(2) Leaks, as indicated by an instrument reading greater than 500 parts per million by volume above background or by visual inspections, shall be repaired as soon as practical, except as provided in paragraph (d)(3) of this section. Records shall be generated as specified in § 63.998(d)(1)(iii) when a leak is detected.

(i) A first attempt at repair shall be made no later than 5 days after the leak is detected.

(ii) Except as provided in paragraph (d)(3) of this section, repairs shall be completed no later than 15 days after the leak is detected or at the beginning of the next introduction of vapors to the system, whichever is later.

(3) Delay of repair of a closed vent system for which leaks have been detected is allowed if repair within 15 days after a leak is detected is technically infeasible or unsafe without a closed vent system shutdown, as defined in § 63.981, or if the owner or operator determines that emissions resulting from immediate repair would be greater than the emissions likely to result from delay of repair. Repair of such equipment shall be completed as soon as practical, but not later than the end of the next closed vent system shutdown.

§ 63.984 Fuel gas systems and processes to which storage vessel, transfer rack, or equipment leak regulated material emissions are routed.

(a) *Equipment and operating requirements for fuel gas systems and processes.* (1) Except during periods of start-up, shutdown and malfunction as specified in the referencing subpart, the fuel gas system or process shall be operating at all times when regulated material emissions are routed to it.

(2) The owner or operator of a transfer rack subject to the provisions of this subpart shall ensure that no pressure relief device in the transfer rack's system returning vapors to a fuel gas system or process shall open to the atmosphere during loading. Pressure relief devices needed for safety purposes are not subject to this paragraph.

(b) *Fuel gas system and process compliance assessment.* (1) If emissions are routed to a fuel gas system, there is no requirement to conduct a performance test or design evaluation.

(2) If emissions are routed to a process, the regulated material in the emissions shall meet one or more of the conditions specified in paragraphs (b)(2)(i) through (iv) of this section. The owner or operator of storage vessels subject to this paragraph shall comply with the compliance demonstration requirements in paragraph (b)(3) of this section.

(i) Recycled and/or consumed in the same manner as a material that fulfills the same function in that process;

(ii) Transformed by chemical reaction into materials that are not regulated materials;

(iii) Incorporated into a product; and/or

(iv) Recovered.

(3) To demonstrate compliance with paragraph (b)(2) of this section for a storage vessel, the owner or operator shall prepare a design evaluation (or engineering assessment) that demonstrates the extent to which one or more of the conditions specified in paragraphs (b)(2)(i) through (iv) of this section are being met.

(c) *Statement of connection.* For storage vessels and transfer racks, the owner or operator shall submit the statement of connection reports for fuel gas systems specified in § 63.999(b)(1)(ii), as appropriate.

§ 63.985 Nonflare control devices used to control emissions from storage vessels and low throughput transfer racks.

(a) *Nonflare control device equipment and operating requirements.* The owner or operator shall operate and maintain the nonflare control device so that the monitored parameters defined as required in paragraph (c) of this section remain within the ranges specified in the Notification of Compliance Status whenever emissions of regulated material are routed to the control device except during periods of start-up, shutdown, and malfunction as specified in the referencing subpart.

(b) *Nonflare control device design evaluation or performance test requirements.* When using a control device other than a flare, the owner or operator shall comply with the requirements in paragraphs (b)(1)(i) or (ii) of this section, except as provided in paragraphs (b)(2) and (3) of this section.

(1) *Design evaluation or performance test results.* The owner or operator shall prepare and submit with the Notification of Compliance Status, as specified in § 63.999(b)(2), either a design evaluation that includes the information specified in paragraph (b)(1)(i) of this section, or the results of the performance test as described in paragraph (b)(1)(ii) of this section.

(i) *Design evaluation.* The design evaluation shall include documentation demonstrating that the control device being used achieves the required control efficiency during the reasonably expected maximum storage vessel filling or transfer loading rate. This documentation is to include a description of the gas stream that enters the control device, including flow and regulated material content, and the information specified in paragraphs (b)(1)(i)(A) through (E) of this section, as applicable. For storage vessels, the description of the gas stream that enters the control device shall be provided for varying liquid level conditions. This documentation shall be submitted with the Notification of Compliance Status as specified in § 63.999(b)(2).

(A) The efficiency determination is to include consideration of all vapors, gases, and liquids, other than fuels, received by the control device.

(B) If an enclosed combustion device with a minimum residence time of 0.5 seconds and a minimum temperature of 760 °C is used to meet an emission reduction requirement specified in a referencing subpart for storage vessels and transfer racks, documentation that those conditions exist is sufficient to meet the requirements of paragraph (b)(1)(i) of this section.

(C) Except as provided in paragraph (b)(1)(i)(B) of this section for enclosed combustion devices, the design evaluation shall include the estimated autoignition temperature of the stream being combusted, the flow rate of the stream, the combustion temperature, and the residence time at the combustion temperature.

(D) For carbon adsorbers, the design evaluation shall include the estimated affinity of the regulated material vapors for carbon, the amount of carbon in each bed, the number of beds, the humidity, the temperature, the flow rate of the

the provisions of either paragraphs (a)(3)(i) or (ii) of this section for each closed vent system that contains bypass lines that could divert a vent stream to the atmosphere.

(i) Properly install, maintain, and operate a flow indicator that takes a reading at least once every 15 minutes. Records shall be generated as specified in § 63.998(d)(1)(ii)(A). The flow indicator shall be installed at the entrance to any bypass line.

(ii) Secure the bypass line valve in the non-diverting position with a car-seal or a lock-and-key type configuration. A visual inspection of the seal or closure mechanism shall be performed at least once every month to ensure the valve is maintained in the non-diverting position and the vent stream is not diverted through the bypass line. Records shall be generated as specified in § 63.998(d)(1)(ii)(B).

(4) *Loading arms at transfer racks.* Each closed vent system collecting regulated material from a transfer rack shall be designed and operated so that regulated material vapors collected at one loading arm will not pass through another loading arm in the rack to the atmosphere.

(5) *Pressure relief devices in a transfer rack's closed vent system.* The owner or operator of a transfer rack subject to the provisions of this subpart shall ensure that no pressure relief device in the transfer rack's closed vent system shall open to the atmosphere during loading. Pressure relief devices needed for safety purposes are not subject to this paragraph.

(b) *Closed vent system inspection requirements.* The provisions of this subpart apply to closed vent systems collecting regulated material from a regulated source. Inspection records shall be generated as specified in § 63.998(d)(1)(iii) and (iv) of this section.

(1) Except for any closed vent systems that are designated as unsafe or difficult to inspect as provided in paragraphs (b)(2) and (3) of this section, each closed vent system shall be inspected as specified in paragraph (b)(1)(i) or (ii) of this section.

(i) If the closed vent system is constructed of hard-piping, the owner or operator shall comply with the requirements specified in paragraphs (b)(1)(i)(A) and (B) of this section.

(A) Conduct an initial inspection according to the procedures in paragraph (c) of this section; and

(B) Conduct annual visual inspections for visible, audible, or olfactory indications of leaks.

(ii) If the closed vent system is constructed of ductwork, the owner or operator shall conduct an initial and annual inspection according to the procedures in paragraph (c) of this section.

(2) Any parts of the closed vent system that are designated, as described in § 63.998(d)(1)(i), as unsafe to inspect are exempt from the inspection requirements of paragraph (b)(1) of this section if the conditions of paragraphs (b)(2)(i) and (ii) of this section are met.

(i) The owner or operator determines that the equipment is unsafe-to-inspect because inspecting personnel would be exposed to an imminent or potential danger as a consequence of complying with paragraph (b)(1) of this section; and

(ii) The owner or operator has a written plan that requires inspection of the equipment as frequently as practical during safe-to-inspect times. Inspection is not required more than once annually.

(3) Any parts of the closed vent system that are designated, as described in § 63.998(d)(1)(i), as difficult-to-inspect are exempt from the inspection requirements of paragraph (b)(1) of this section if the provisions of paragraphs (b)(3)(i) and (ii) of this section apply.

(i) The owner or operator determines that the equipment cannot be inspected without elevating the inspecting personnel more than 2 meters (7 feet) above a support surface; and

(ii) The owner or operator has a written plan that requires inspection of the equipment at least once every 5 years.

(c) *Closed vent system inspection procedures.* The provisions of this paragraph apply to closed vent systems collecting regulated material from a regulated source.

(1) Each closed vent system subject to this paragraph shall be inspected according to the procedures specified in paragraphs (c)(1)(i) through (vii) of this section.

(i) Inspections shall be conducted in accordance with Method 21 of 40 CFR part 60, appendix A, except as specified in this section.

(ii) Except as provided in (c)(1)(iii) of this section, the detection instrument shall meet the performance criteria of Method 21 of 40 CFR part 60, appendix A, except the instrument response factor criteria in section 3.1.2(a) of Method 21 must be for the representative composition of the process fluid and not of each individual VOC in the stream. For process streams that contain nitrogen, air, water, or other inerts that are not organic HAP or VOC, the representative stream response factor must be determined on an inert-free basis. The response factor may be determined at any concentration for which the monitoring for leaks will be conducted.

(iii) If no instrument is available at the plant site that will meet the performance criteria of Method 21 specified in paragraph (c)(1)(ii) of this section, the instrument readings may be adjusted by multiplying by the representative response factor of the process fluid, calculated on an inert-free basis as described in paragraph (c)(1)(ii) of this section.

(iv) The detection instrument shall be calibrated before use on each day of its use by the procedures specified in Method 21 of 40 CFR part 60, appendix A.

(v) Calibration gases shall be as specified in paragraphs (c)(1)(v)(A) through (C) of this section.

(A) Zero air (less than 10 parts per million hydrocarbon in air); and

(B) Mixtures of methane in air at a concentration less than 10,000 parts per million. A calibration gas other than methane in air may be used if the instrument does not respond to methane or if the instrument does not meet the performance criteria specified in paragraph (c)(1)(ii) of this section. In such cases, the calibration gas may be a mixture of one or more of the compounds to be measured in air.

(C) If the detection instrument's design allows for multiple calibration scales, then the lower scale shall be calibrated with a calibration gas that is no higher than 2,500 parts per million.

(vi) An owner or operator may elect to adjust or not adjust instrument readings for background. If an owner or operator elects not to adjust readings for background, all such instrument readings shall be compared directly to 500 parts per million to determine whether there is a leak. If an owner or operator elects to adjust instrument readings for background, the owner or operator shall measure background concentration using the procedures in this section. The owner or operator shall subtract the background reading from the maximum concentration indicated by the instrument.

(vii) If the owner or operator elects to adjust for background, the arithmetic difference between the maximum concentration indicated by the instrument and the background level shall be compared with 500 parts per million for determining whether there is a leak.

(2) The instrument probe shall be traversed around all potential leak interfaces as described in Method 21 of 40 CFR part 60, appendix A.

(3) Except as provided in paragraph (c)(4) of this section, inspections shall

minimum accuracy of ±1 percent of the temperature being monitored expressed in degrees Celsius or ±1.2 degrees Celsius (°C), whichever is greater.

§ 63.982 Requirements.

(a) *General compliance requirements for storage vessels, process vents, transfer racks, and equipment leaks.* An owner or operator who is referred to this subpart for controlling regulated material emissions from storage vessels, process vents, low and high throughput transfer racks, or equipment leaks by venting emissions through a closed vent system to a flare, nonflare control device or routing to a fuel gas system or process shall comply with the applicable requirements of paragraphs (a)(1) through (4) of this section.

(1) *Storage vessels.* The owner or operator shall comply with the applicable provisions of paragraphs (b), (c)(1), and (d) of this section.

(2) *Process vents.* The owner or operator shall comply with the applicable provisions of paragraphs (b), (c)(2), and (e) of this section.

(3) *Transfer racks.* (i) For low throughput transfer racks, the owner or operator shall comply with the applicable provisions of paragraphs (b), (c)(1), and (d) of this section.

(ii) For high throughput transfer racks, the owner or operator shall comply with the applicable provisions of paragraphs (b), (c)(2), and (d) of this section.

(4) *Equipment leaks.* The owner or operator shall comply with the applicable provisions of paragraphs (b), (c)(3), and (d) of this section.

(b) *Closed vent system and flare.* Owners or operators that vent emissions through a closed vent system to a flare shall meet the requirements in § 63.983 for closed vent systems; § 63.987 for flares; § 63.997 (a), (b) and (c) for provisions regarding flare compliance assessments; the monitoring, recordkeeping, and reporting requirements referenced therein; and the applicable recordkeeping and reporting requirements of §§ 63.998 and 63.999. No other provisions of this subpart apply to emissions vented through a closed vent system to a flare.

(c) *Closed vent system and nonflare control device.* Owners or operators who control emissions through a closed vent system to a nonflare control device shall meet the requirements in § 63.983 for closed vent systems, the applicable recordkeeping and reporting requirements of §§ 63.998 and 63.999, and the applicable requirements listed in paragraphs (c)(1) through (3) of this section.

(1) For storage vessels and low throughput transfer racks, the owner or operator shall meet the requirements in § 63.985 for nonflare control devices and the monitoring, recordkeeping, and reporting requirements referenced therein. No other provisions of this subpart apply to low throughput transfer rack emissions or storage vessel emissions vented through a closed vent system to a nonflare control device unless specifically required in the monitoring plan submitted under § 63.985(c).

(2) For process vents and high throughput transfer racks, the owner or operator shall meet the requirements applicable to the control devices being used in § 63.988, § 63.990 or § 63.995; the applicable general monitoring requirements of § 63.996 and the applicable performance test requirements and procedures of § 63.997; and the monitoring, recordkeeping and reporting requirements referenced therein. Owners or operators subject to halogen reduction device requirements under a referencing subpart must also comply with § 63.994 and the monitoring, recordkeeping, and reporting requirements referenced therein. The requirements of § 63.984 through § 63.986 do not apply to process vents or high throughput transfer racks.

(3) For equipment leaks, owners or operators shall meet the requirements in § 63.986 for nonflare control devices used for equipment leak emissions and the monitoring, recordkeeping, and reporting requirements referenced therein. No other provisions of this subpart apply to equipment leak emissions vented through a closed vent system to a nonflare control device.

(d) *Route to a fuel gas system or process.* Owners or operators that route emissions to a fuel gas system or to a process shall meet the requirements in § 63.984, the monitoring, recordkeeping, and reporting requirements referenced therein, and the applicable recordkeeping and reporting requirements of §§ 63.998 and 63.999. No other provisions of this subpart apply to emissions being routed to a fuel gas system or process.

(e) *Final recovery devices.* Owners or operators who use a final recovery device to maintain a TRE above a level specified in a referencing subpart shall meet the requirements in § 63.993 and the monitoring, recordkeeping, and reporting requirements referenced therein that are applicable to the recovery device being used; the applicable monitoring requirements in § 63.996 and the recordkeeping and reporting requirements referenced therein; and the applicable recordkeeping and reporting requirements of §§ 63.998 and 63.999. No other provisions of this subpart apply to process vent emissions routed to a final recovery device.

(f) *Combined emissions.* When emissions from different emission types (e.g., emissions from process vents, transfer racks, and/or storage vessels) are combined, an owner or operator shall comply with the requirements of either paragraph (f)(1) or (2) of this section.

(1) Comply with the applicable requirements of this subpart for each kind of emissions in the stream (e.g., the requirements of § 63.982(a)(2) for process vents, and the requirements of § 63.982(a)(3) for transfer racks); or

(2) Comply with the first set of requirements identified in paragraphs (f)(2)(i) through (iii) of this section which applies to any individual emission stream that is included in the combined stream. Compliance with paragraphs (f)(2)(i) through (iii) of this section constitutes compliance with all other emissions requirements for other emission streams.

(i) The requirements of § 63.982(a)(2) for process vents, including applicable monitoring, recordkeeping, and reporting;

(ii) The requirements of § 63.982(a)(3)(ii) for high throughput transfer racks, including applicable monitoring, recordkeeping, and reporting;

(iii) The requirements of § 63.982(a)(1) or (a)(3)(i) for control of emissions from storage vessels or low throughput transfer racks, including applicable monitoring, recordkeeping, and reporting.

§ 63.983 Closed vent systems.

(a) *Closed vent system equipment and operating requirements.* Except for closed vent systems operated and maintained under negative pressure, the provisions of this paragraph apply to closed vent systems collecting regulated material from a regulated source.

(1) *Collection of emissions.* Each closed vent system shall be designed and operated to collect the regulated material vapors from the emission point, and to route the collected vapors to a control device.

(2) *Period of operation.* Closed vent systems used to comply with the provisions of this subpart shall be operated at all times when emissions are vented to, or collected by, them.

(3) *Bypass monitoring.* Except for equipment needed for safety purposes such as pressure relief devices, low leg drains, high point bleeds, analyzer vents, and open-ended valves or lines, the owner or operator shall comply with

process heater occupied by the flame envelope.

Flow indicator means a device which indicates whether gas flow is, or whether the valve position would allow gas flow to be, present in a line.

Fuel gas means gases that are combusted to derive useful work or heat.

Fuel gas system means the offsite and onsite piping and flow and pressure control system that gathers gaseous streams generated by onsite operations, may blend them with other sources of gas, and transports the gaseous streams for use as fuel gas in combustion devices or in-process combustion equipment such as furnaces and gas turbines, either singly or in combination.

Hard-piping means pipe or tubing that is manufactured and properly installed using good engineering judgment and standards, such as ANSI B31.3.

High throughput transfer rack means those transfer racks that transfer a total of 11.8 million liters per year or greater of liquid containing regulated material.

Incinerator means an enclosed combustion device that is used for destroying organic compounds. Auxiliary fuel may be used to heat waste gas to combustion temperatures. Any energy recovery section present is not physically formed into one manufactured or assembled unit with the combustion section; rather, the energy recovery section is a separate section following the combustion section and the two are joined by ducts or connections carrying flue gas. The above energy recovery section limitation does not apply to an energy recovery section used solely to preheat the incoming vent stream or combustion air.

Low throughput transfer rack means those transfer racks that transfer less than a total of 11.8 million liters per year of liquid containing regulated material.

Operating parameter value means a minimum or maximum value established for a control device parameter which, if achieved by itself or in combination with one or more other operating parameter values, determines that an owner or operator has complied with an applicable emission limit or operating limit.

Organic monitoring device means a unit of equipment used to indicate the concentration level of organic compounds based on a detection principle such as infra-red, photo ionization, or thermal conductivity.

Owner or operator means any person who owns, leases, operates, controls, or supervises a regulated source or a stationary source of which a regulated source is a part.

Performance level means the level at which the regulated material in the gases or vapors vented to a control or recovery device is removed, recovered, or destroyed. Examples of control device performance levels include: achieving a minimum organic reduction efficiency expressed as a percentage of regulated material removed or destroyed in the control device inlet stream on a weight-basis; achieving an organic concentration in the control device exhaust stream that is less than a maximum allowable limit expressed in parts per million by volume on a dry basis corrected to 3 percent oxygen if a combustion device is the control device and supplemental combustion air is used to combust the emissions; or maintaining appropriate control device operating parameters indicative of the device performance at specified values.

Performance test means the collection of data resulting from the execution of a test method (usually three emission test runs) used to demonstrate compliance with a relevant emission limit as specified in the performance test section of this subpart or in the referencing subpart.

Primary fuel means the fuel that provides the principal heat input to a device. To be considered primary, the fuel must be able to sustain operation without the addition of other fuels.

Process heater means an enclosed combustion device that transfers heat liberated by burning fuel directly to process streams or to heat transfer liquids other than water. A process heater may, as a secondary function, heat water in unfired heat recovery sections.

Recapture device means an individual unit of equipment capable of and used for the purpose of recovering chemicals, but not normally for use, reuse, or sale. For example, a recapture device may recover chemicals primarily for disposal. Recapture devices include, but are not limited to, absorbers, carbon adsorbers, and condensers. For purposes of the monitoring, recordkeeping and reporting requirements of this subpart, recapture devices are considered recovery devices.

Recovery device means an individual unit of equipment capable of and normally used for the purpose of recovering chemicals for fuel value (i.e., net positive heating value), use, reuse, or for sale for fuel value, use, or reuse. Examples of equipment that may be recovery devices include absorbers, carbon adsorbers, condensers, oil-water separators or organic-water separators, or organic removal devices such as decanters, strippers, or thin-film evaporation units. For purposes of the monitoring, recordkeeping, and reporting requirements of this subpart, recapture devices are considered recovery devices.

Referencing subpart means the subpart which refers an owner or operator to this subpart.

Regulated material, for purposes of this subpart, refers to vapors from volatile organic liquids (VOL), volatile organic compounds (VOC), or hazardous air pollutants (HAP), or other chemicals or groups of chemicals that are regulated by a referencing subpart.

Regulated source for the purposes of this subpart, means the stationary source, the group of stationary sources, or the portion of a stationary source that is regulated by a relevant standard or other requirement established pursuant to a referencing subpart.

Repaired, for the purposes of this subpart, means that equipment; is adjusted, or otherwise altered, to eliminate a leak as defined in the applicable sections of this subpart; and unless otherwise specified in applicable provisions of this subpart, is inspected as specified in § 63.983(c) to verify that emissions from the equipment are below the applicable leak definition.

Routed to a process or route to a process means the gas streams are conveyed to any enclosed portion of a process unit where the emissions are recycled and/or consumed in the same manner as a material that fulfills the same function in the process; and/or transformed by chemical reaction into materials that are not regulated materials; and/or incorporated into a product; and/or recovered.

Run means one of a series of emission or other measurements needed to determine emissions for a representative operating period or cycle as specified in this subpart. Unless otherwise specified, a run may be either intermittent or continuous within the limits of good engineering practice.

Secondary fuel means a fuel fired through a burner other than the primary fuel burner that provides supplementary heat in addition to the heat provided by the primary fuel.

Sensor means a device that measures a physical quantity or the change in a physical quantity, such as temperature, pressure, flow rate, pH, or liquid level.

Specific gravity monitoring device means a unit of equipment used to monitor specific gravity and having a minimum accuracy of ±0.02 specific gravity units.

Temperature monitoring device means a unit of equipment used to monitor temperature and having a

Dated: May 14, 1999.

Carol M. Browner,

Administrator.

For the reasons set out in the preamble, title 40, chapter I, part 63 of the Code of Federal Regulations is amended as follows:

PART 63—NATIONAL EMISSION STANDARDS FOR HAZARDOUS AIR POLLUTANTS FOR AFFECTED SOURCE CATEGORIES

1. The authority citation for part 63 continues to read as follows:

Authority: 42 U.S.C. 7401, et. seq.

2. Part 63 is amended by adding subpart SS, consisting of §§ 63.980 through 63.999, to read as follows.

Subpart SS—National Emission Standards for Closed Vent Systems, Control Devices, Recovery Devices and Routing to a Fuel Gas System or a Process

Sec.

63.980 Applicability.
63.981 Definitions.
63.982 Requirements.
63.983 Closed vent systems.
63.984 Fuel gas systems and processes to which storage vessel, transfer rack, or equipment leak regulated materials emissions are routed.
63.985 Nonflare control devices used to control emissions from storage vessels and low throughput transfer racks.
63.986 Nonflare control devices used for equipment leaks only.
63.987 Flare requirements.
63.988 Incinerators, boilers, and process heaters.
63.989 [Reserved].
63.990 Absorbers, condensers, and carbon adsorbers used as control devices.
63.991 [Reserved].
63.992 [Reserved].
63.993 Absorbers, condensers, carbon adsorbers and other recovery devices used as final recovery devices.
63.994 Halogen scrubbers and other halogen reduction devices.
63.995 Other control devices.
63.996 General monitoring requirements for control and recovery devices.
63.997 Performance test and flare compliance assessment requirements for control devices.
63.998 Recordkeeping requirements.
63.999 Notifications and other reports.

Subpart SS—National Emission Standards for Closed Vent Systems, Control Devices, Recovery Devices and Routing to a Fuel Gas System or a Process

§ 63.980 Applicability.

The provisions of this subpart include requirements for closed vent systems, control devices and routing of air emissions to a fuel gas system or process. These provisions apply when another subpart references the use of this subpart for such air emission control. These air emission standards are placed here for administrative convenience and only apply to those owners and operators of facilities subject to a referencing subpart. The provisions of 40 CFR part 63, subpart A (General Provisions) do not apply to this subpart except as specified in a referencing subpart.

§ 63.981 Definitions.

Alternative test method means any method of sampling and analyzing for an air pollutant that is not a reference test or equivalent method, and that has been demonstrated to the Administrator's satisfaction, using Method 301 in appendix A of this part 63, or previously approved by the Administrator prior to the promulgation date of standards for an affected source or affected facility under a referencing subpart, to produce results adequate for the Administrator's determination that it may be used in place of a test method specified in this subpart.

Boiler means any enclosed combustion device that extracts useful energy in the form of steam and is not an incinerator or a process heater.

By compound means by individual stream components, not carbon equivalents.

Closed vent system means a system that is not open to the atmosphere and is composed of piping, ductwork, connections, and, if necessary, flow inducing devices that transport gas or vapor from an emission point to a control device. Closed vent system does not include the vapor collection system that is part of any tank truck or railcar.

Closed vent system shutdown means a work practice or operational procedure that stops production from a process unit or part of a process unit during which it is technically feasible to clear process material from a closed vent system or part of a closed vent system consistent with safety constraints and during which repairs can be effected. An unscheduled work practice or operational procedure that stops production from a process unit or part of a process unit for less than 24 hours is not a closed vent system shutdown. An unscheduled work practice or operational procedure that would stop production from a process unit or part of a process unit for a shorter period of time than would be required to clear the closed vent system or part of the closed vent system of materials and start up the unit, and would result in greater emissions than delay of repair of leaking components until the next scheduled closed vent system shutdown, is not a closed vent system shutdown. The use of spare equipment and technically feasible bypassing of equipment without stopping production are not closed vent system shutdowns.

Combustion device means an individual unit of equipment, such as a flare, incinerator, process heater, or boiler, used for the combustion of organic emissions.

Continuous parameter monitoring system (CPMS) means the total equipment that may be required to meet the data acquisition and availability requirements of this part, used to sample, condition (if applicable), analyze, and provide a record of process or control system parameters.

Continuous record means documentation, either in hard copy or computer readable form, of data values measured at least once every 15 minutes and recorded at the frequency specified in § 63.998(b).

Control device means, with the exceptions noted below, a combustion device, recovery device, recapture device, or any combination of these devices used to comply with this subpart or a referencing subpart. For process vents from continuous unit operations at affected sources in subcategories where the applicability criteria includes a TRE index value, recovery devices are not considered to be control devices. Primary condensers on steam strippers or fuel gas systems are not considered to be control devices.

Control System means the combination of the closed vent system and the control devices used to collect and control vapors or gases from a regulated emission source.

Day means a calendar day.

Ductwork means a conveyance system such as those commonly used for heating and ventilation systems. It is often made of sheet metal and often has sections connected by screws or crimping. Hard-piping is not ductwork.

Final recovery device means the last recovery device on a process vent stream from a continuous unit operation at an affected source in a subcategory where the applicability criteria includes a TRE index value. The final recovery device usually discharges to a combustion device, recapture device, or directly to the atmosphere.

First attempt at repair, for the purposes of this subpart, means to take action for the purpose of stopping or reducing leakage of organic material to the atmosphere, followed by monitoring as specified in § 63.983(c) to verify whether the leak is repaired, unless the owner or operator determines by other means that the leak is not repaired.

Flame zone means the portion of the combustion chamber in a boiler or

informing, educating, and advising any small governments that may be significantly or uniquely affected by the rule.

Under section 205 of UMRA, we must identify and consider a reasonable number of regulatory alternatives before promulgating a rule for which a budgetary impact statement must be prepared. The Agency must select from those alternatives the least burdensome alternative for State, local, and tribal governments and the private sector that achieves the objectives of the rule, unless the Agency explains why this alternative is not selected or unless the selection of this alternative is inconsistent with law.

Because this final rule does not include a Federal mandate that may result in expenditures of $100 million or more for State, local, and tribal governments, in the aggregate, or the private sector in any one year, we have not prepared a budgetary impact statement or specifically addressed the selection of the least costly, most cost-effective, or least burdensome alternative. In addition, because small governments will not be significantly or uniquely affected by this rule, we are not required to develop a plan with regard to small governments. Therefore, the requirements of UMRA do not apply to this final rule.

G. Submittal to Congress and the General Accounting Office

The Congressional Review Act, 5 U.S.C. 801, *et seq.*, as added by the SBREFA of 1996, provides that before a rule may take effect, the agency promulgating the rule must submit a rule report, which includes a copy of the rule, to each House of the Congress and to the Comptroller General of the United States. Therefore, we will submit a report containing this rule and other required information to the United States Senate, the United States House of Representatives, and the Comptroller General of the United States prior to publication of the rule in the **Federal Register**. A major rule cannot take effect until 60 days after it is published in the **Federal Register**. This rule is not a "major rule" as defined by 5 U.S.C. 804(2). This rule will be effective June 29, 1999.

H. National Technology Transfer and Advancement Act

Under section 12(d) of the National Technology Transfer and Advancement Act of 1995 (the NTTAA), Pub. L. No. 104–113, § 12(d) (15 U.S.C. 272 note), we are directed to use voluntary consensus standards instead of government-unique standards in its regulatory activities unless to do so would be inconsistent with applicable law or otherwise impractical. By doing so, the Act is intended to reduce the cost to the private and public sectors.

Voluntary consensus standards are technical standards (e.g., materials specifications, test methods, sampling procedures, etc.) that are developed or adopted by one or more voluntary consensus standards bodies. Examples of organizations generally regarded as voluntary consensus standards bodies include the American Society for Testing and Materials (ASTM), International Organization for Standardization (IOS), International Electrotechnical Commission (IEC), American Petroleum Institute (API), National Fire Protection Association (NFPA), and the Society of Automotive Engineers (SAE). The NTTAA requires Federal agencies like us to provide Congress, through OMB, explanations when the we decide not to use available and applicable voluntary consensus standards.

This action does not require the use of any new technical standards. It does, however, incorporate by reference existing technical standards, including government-unique technical standards. The technical standards included in this final rule are standards that have been proposed and promulgated under other rulemakings for similar source control applicability and compliance determinations. In response to the proposed rule, we received no comments pertaining to the use of additional voluntary consensus standards in lieu of those included under other rulemakings and incorporated by reference in this final rule.

As part of a larger effort, we are undertaking a project to cross-reference existing voluntary consensus standards in testing, sampling, and analysis, with current and future EPA test methods. When completed, this project will assist us in identifying potentially applicable voluntary consensus standards that can then be evaluated for equivalency and applicability in determining compliance with future regulations.

I. Executive Order 13045

Executive Order 13045, entitled Protection of Children from Environmental Health Risks and Safety Risks (62 FR 19885, April 23, 1997), applies to any rule that we determine (1) is economically significant as defined under Executive Order 12866, and (2) the environmental health or safety risk addressed by the rule has a disproportionate effect on children. If the regulatory action meets both criteria, we must evaluate the environmental health or safety effects of the planned rule on children and explain why the planned regulation is preferable to other potentially effective and reasonably feasible alternatives considered by us.

This final rule is not subject to Executive Order 13045 because it is not an economically significant regulatory action as defined by Executive Order 12866. No children's risk analysis was performed for this rulemaking because the agency does not have the data necessary to conduct such analysis, and cannot obtain such data with available resources.

J. Executive Order 13084

Under Executive Order 13084, we may not issue a regulation that is not required by statute, that significantly or uniquely affects the communities of Indian tribal governments, and that imposes substantial direct compliance costs on those communities, unless the Federal government provides the funds necessary to pay the direct compliance cost incurred by the tribal governments, or we consult with those governments. If we comply by consulting, Executive Order 13084 requires us to provide to the Office of Management and Budget, in a separately identified section of the preamble to the rule, a description of the extent of our prior consultation with representatives of affected tribal governments, a summary of the nature of their concerns, and a statement supporting the need to issue the regulation. In addition, Executive Order 13084 requires us to develop an effective process permitting elected officials and other representatives of Indian tribal governments "to provide meaningful and timely input in the development of regulatory policies on matters that significantly or uniquely affect their communities." Today's rule implements requirements specifically set forth by Congress in section 112 of the Act without the exercise of any discretion by us. Accordingly, the requirements of section 3(b) of Executive Order 13084 do not apply to this rule.

List of Subjects for 40 CFR Part 63

Environmental protection, Acetal resins production, Acrylic and modacrylic fiber production, Administrative practice and procedure, Air pollution control, Equipment leaks, Fiber spinning lines, Hazardous substances, Hydrogen fluoride production, Intergovernmental relations, Kilns, Polycarbonate production, Process vents, Reporting and recordkeeping requirements, Storage vessels, Transfer.

All information submitted to us for which a claim of confidentiality is made will be safeguarded according to our policies set forth in title 40, chapter 1, part 2, subpart B, Confidentiality of Business Information (see 40 CFR part 2; 41 FR 36902, September 1, 1976; amended by 43 FR 3999, September 8, 1978; 43 FR 42251, September 28, 1978; and 44 FR 17674, March 23, 1979).

The total estimated annual average hourly and annual average cost burden per respondent for the standards for the AR production, AMF production, HF production, and PC production source categories are 6,125 hours and $262,700. These burden hour and cost estimates for monitoring, recordkeeping, and reporting are aggregated for affected sources and averaged over the first 3 years of the rule.

Burden means the total time, effort, or financial resources expended by persons to generate, maintain, retain, or disclose or provide information to or for a Federal agency. This includes the time needed to review instructions; develop, acquire, install, and utilize technology and systems for the purposes of collecting, validating, and verifying information, processing and maintaining information, and disclosing and providing information; adjust the existing ways to comply with any previously applicable instructions and requirements; train personnel to be able to respond to a collection of information; search data sources; complete and review the collection of information; and transmit or otherwise disclose the information.

Any Agency may not conduct or sponsor, and a person is not required to respond to, a collection of information unless it displays a currently valid OMB control number. The OMB control numbers for our regulations are listed in 40 CFR part 9 and 48 CFR chapter 15.

C. Executive Order 12866

Under Executive Order 12866 (58 FR 51735, October 4, 1993), we must determine whether the regulatory action is "significant" and therefore subject to review by the Office of Management and Budget (OMB) and the requirements of the Executive Order. The Order defines "significant regulatory action" as one that is likely to result in a rule that may:

(1) Have an annual effect on the economy of $100 million or more, or adversely affect in a material way the economy, a sector of the economy, productivity, competition, jobs, the environment, public health or safety, or State, local, or tribal governments or communities;

(2) Create a serious inconsistency or otherwise interfere with an action taken or planned by another agency;

(3) Materially alter the budgetary impact of entitlements, grants, user fees, or loan programs or the rights and obligations of recipients thereof; or

(4) Raise novel legal or policy issues arising out of legal mandates, the President's priorities, or the principles set forth in the Executive Order.

Pursuant to the terms of Executive Order 12866, we have determined that this final rule may be construed as a "significant regulatory action" under criterion (4) above. Today's final rule may be considered novel in certain respects because it includes new policies and procedures pertaining to a generic MACT program, which will be utilized by us in establishing NESHAP under section 112 of the Act for certain small source categories consisting of five or fewer sources. As part of this generic MACT program, we will be using an alternative methodology under which the we will make MACT determinations for appropriate small categories by referring to previous MACT standards that have been promulgated for similar sources in other categories. The basic purposes of this generic MACT program are to use public and private sector resources efficiently and to promote regulatory consistency and predictability in MACT standard development.

D. Executive Order 12875

Under Executive Order 12875, we may not issue a regulation that is not required by statute and that creates a mandate upon a State, local or tribal government, unless the Federal government provides the funds necessary to pay the direct compliance costs incurred by those governments, or we consult with those governments. If we comply by consulting, Executive Order 12875 requires us to develop an effective process permitting elected officials and other representatives of State, local and tribal governments "to provide meaningful and timely input in the development of regulatory proposals containing significant unfunded mandates." Today's rule implements requirements specifically set forth by the Congress in section 112 of the Act without the exercise of any discretion by us. Accordingly, the requirements of section 1(a) of Executive Order 12875 do not apply to this rule.

E. Regulatory Flexibility Act/Small Business Regulatory Enforcement Fairness Act of 1996

The Regulatory Flexibility Act (RFA) of 1980 (5 U.S.C. 601, *et seq.*), as amended by the Small Business Regulatory Enforcement Fairness Act of 1996 (SBREFA), requires the EPA to give special consideration to the effect of Federal regulations on small entities and to consider regulatory options that might mitigate any such impacts. Small entities include small businesses, small not-for-profit enterprises, and small governmental jurisdictions.

Each of the specific MACT standards adopted in this rulemaking applies to a source category with five or fewer major sources; therefore, this rule will not have a significant impact on a substantial number of small entities, and a regulatory flexibility analysis was determined to be unnecessary.

The Generic MACT procedures we are announcing today may also be applied to other small source categories in the future. Moreover, it is possible that the MACT standards for some larger source categories may reference or incorporate some element of the generic standards we are adopting for certain types of emission points. In any case, the nature of any regulatory impacts and the applicability of RFA requirements are matters that will be separately addressed in any subsequent rulemaking that utilizes Generic MACT procedures or incorporates generic standards.

Although it was not required by the statute, we conducted a limited assessment of possible outcomes and the economic effect of the proposed standards on small entities as part of the economic analysis conducted before proposal for each of the source categories for which standards are being promulgated. These limited assessments showed no adverse economic effect for any small entities within any of these source categories. Changes that have been made since proposal do not change the results of these assessments. The economic analysis for each of the source categories for which standards are being promulgated can be obtained from the source category-specific dockets established for each of the source categories (see *Docket* in **ADDRESSES** section for individual docket numbers).

F. Unfunded Mandates Reform Act

Under section 202 of the Unfunded Mandates Reform Act (UMRA) of 1995, Pub. L. 104–4, we must prepare a budgetary impact statement to accompany any proposed or final rule that includes a Federal mandate that may result in estimated costs to State, local or tribal governments, in the aggregate, or to the private sector, of $100 million or more in any one year. Section 203 requires us to establish a plan for obtaining input from and

modifications to accommodate new monomers, spin line configuration layouts, and other process and site considerations), are not limiting factors for new and modified sources; therefore, the new and modified source MACT requirements are not being significantly revised. The 85 percent reduction option has been retained for new sources in order to provide flexibility for future development of means to achieve equivalent emission reductions, and the source reduction performance limit (i.e., the 100 ppmw spin dope concentration) is also included to provided operational and control flexibility.

An additional control option for new and modified sources that was not proposed is being added to the final rule. This option is part of the individual source standards in §63.1103(b)(3)(i) and allows the owner or operator to reduce AN emissions from a spinning line that is a part of a new or modified source to less than or equal to 0.25 kilograms per Mg of fiber produced (i.e., 0.5 lb per ton). This alternative standard will allow greater flexibility to facility owners and operators in selecting the type of controls, including pollution prevention measures, that can be applied to their spinning operations to reduce HAP emissions.

An additional change is being made to the AMF standards to correct an inadvertent typographical error. In Table 3 to §63.1103 that lists the requirements for owners and operators complying with paragraph (b)(3)(ii) of the section, the facility-wide emission limits are presented as "... less than or equal to 1.0 kilograms (kg) pf acrylonitrile per megagram (mg) of fiber produced" for existing sources and "* * * less than or equal to 0.5 kilograms (kg) of acrylonitrile per megagram (mg) of fiber produced" for new sources. These values should read "* * * less than or equal to 0.5 kilograms (kg) of acrylonitrile per megagram (mg) of fiber produced (i.e., 1.0 pound AN per ton of fiber produced)" for existing sources and "* * * less than or equal to 0.25 kilograms (kg) of acrylonitrile per megagram (mg) of fiber produced (i.e., 0.5 pound AN per ton of fiber produced)" for new sources. The correct values for the emissions limits are clearly stated in the preamble to the proposed rule (63 FR 55185, October 14, 1998). These same values are also included in our presumptive MACT document (Docket Item 11-A-5 in Docket No. A-97-18) that was developed in collaboration with the industry and State and local agencies.

B. Process and Maintenance Wastewater Stream Provisions

Two commenters provided comment on the process wastewater stream provisions proposed on October 14, 1998. One commenter provided that the proposed provisions do not specify the location for determining HAP concentration. The commenter stated that it seems appropriate to make this determination at the entrance to each wastewater treatment system unit. The commenter recommended that a definition for "point of determination" be made and that references to "point of generation" be changed to "point of determination." The commenter also stated that an owner or operator should be allowed to use all of the test methods specified in subparts F,G, and H of this part (collectively known as the "HON") when determining HAP concentrations in wastewater.

Another commenter stated that there was no information or requirements for treatment or destruction of wastewater streams leaving the process unit, and that the proposal only requires control of secondary emissions from equipment handling the wastewater stream.

Based on comments received, and evaluation of the proposed process and maintenance wastewater stream provisions, we agree that the proposed process and maintenance wastewater stream provisions were not adequate. In addition to the identified applicability procedures and treatment requirement deficiencies, we identified a number of other deficiencies in the proposed standards that were not intended.

Therefore, we have deferred taking final action regarding provisions applicable to process and maintenance wastewater streams for the AR, AMF, and PC production source categories. We have withdrawn the proposed process and maintenance wastewater provisions from the promulgated rule.

In a SNPR published elsewhere in today's **Federal Register**, we reopen the comment period specifically to request additional comment on proposed amendments to the promulgated standards for process and maintenance wastewater for the AR, AMF, and PC production source categories. The amendments to the promulgated standards incorporate and cross-reference appropriate process and maintenance wastewater provisions of the HON for the AR, AMF, and PC production source categories. These amendments respond to comments received, eliminate identified deficiencies that existed in the proposed standards, and reflect our intent.

We plan to take final action regarding the amendments to the proposed provisions for process wastewater streams for the AR, AMF, and PC production source categories by November 15, 1999.

VII. Administrative Requirements

A. Docket

The docket is an organized and complete file of the administrative record compiled by us in the development of this rule. The docket is a dynamic file, since material is added throughout the rulemaking development. The docketing system is intended to allow members of the public and industries involved to readily identify and locate documents so that they can effectively participate in the rulemaking process. Along with the statement of basis and purpose of the proposed and promulgated standards and our responses to significant comments, the contents of the docket will serve as the record in case of judicial review (except for interagency review materials) (see 42 U.S.C. 7607(d)(7)(A)).

B. Paperwork Reduction Act

The information collection requirements in this rule have been submitted for approval to OMB under the *Paperwork Reduction Act*, 44 U.S.C. 3501, *et seq.* An Information Collection Request (ICR) document has been prepared by us (ICR No. 1871.02) and a copy may be obtained from Sandy Farmer, OPPE Regulatory Information Division, U.S. Environmental Protection Agency (2137), 401 M Street, SW, Washington, DC 20460 or by calling (202) 260-2740. The information requirements are not effective until OMB approves them.

The information collections required under this rule are needed as part of the overall compliance and enforcement program. The information will be used by us to ensure that the regulated entities are in compliance with the rule. In addition, our authority to take administrative action would be reduced significantly without the collected information. The recordkeeping and reporting requirements are mandatory and are being established under section 114 of the Act. The generic MACT standards require owners or operators of affected sources to retain records for a period of 5 years. The 5-year retention period is consistent with the General Provisions (subpart A) of 40 CFR part 63, and with the 5-year record retention requirement in the operating permit program under title V of the Act.

the emissions are controlled or not. Enclosing spinning operations requires consideration of a variety of factors such as worker access and safety requirements that must be factored into retrofitting designs unique to this industry. We have not been able, at this time, to identify MACT standards beyond those considered at proposal which apply to situations sufficiently similar to the AMF spinning lines to use as the basis for a similarity argument.

Some existing spinning line processes are subject to the NSPS for synthetic fiber production plants. The commenters pointed out that these spinning lines are in compliance with the NSPS through source reduction measures rather than the NSPS identified reduction techniques of installing enclosures and add-on control devices. As a result of our review of the spinning line emissions and proposed rule basis of enclosure and control, we have concluded that the original assumption of similar enclosure and control applications does not apply to these existing spinning lines.

ii. *Can the pollution prevention control techniques being used by several of the plants with suspension spinning operations be used for the solution process in existing facilities?* Although the air emission and source characteristics for all other emission point types (i.e., tanks, equipment components, wastewater treatment units) are similar throughout the source category, the solution and suspension processes associated with the spinning operations differ from each other in the processing steps and the acrylonitrile concentrations in the process materials and associated emissions. Solution polymerization spin dope for fiber production contains, by product and process design, a significantly higher concentration of residual AN monomer than does suspension polymerization. The public comments argued that the application of the pollution prevention techniques being used for suspension processes (e.g., steam stripping of excess monomer, scavenger solvents) to existing solution processes is not viable because of the physical nature of the solution polymerization process. Specifically, application of high efficiency residual AN polymer steam stripping (incorporated to reduce downstream emissions) is technically feasible to incorporate into the suspension process and is not feasible for a solution polymerization process because the latter does not produce a solid polymer product that can be introduced to direct steam contact without contamination. At solution polymerization facilities, other pollution prevention or source reduction measures which formed the initial technical basis for determining the 100 ppmw action level for all spinning lines may not be capable of achieving the higher AN removal rates of the higher residual monomer concentration present in solution polymerization fiber spinning operations. We agree with the public comments that incorporating the pollution prevention techniques to an existing solution process spinning line is not viable.

iii. *Are there any other control systems that could be applied to the solution process?* We considered control of all HAP emissions from the entire building's exhaust system. Such an exhaust would have very high flow/low pollutant concentration stream; such streams are typically difficult to control to a high level of efficiency and also require very large, expensive control devices. In addition, the public comments pointed out that retrofitting carbon adsorption to the building exhaust may not be a technically viable alternative for existing AMF spinning lines. This is because low volatility organic solvent is typically used in the solution process to provide the reductions of VOC emissions to meet the NSPS. This solvent has a much higher molecular weight and boiling point than either the AN or organic solvents typically used. Solvents are also present in a higher emission exhaust concentration relative to the AN; thus, exacerbating common carbon bed adsorption/desorption problems. This is a reasonable argument with respect to the specific solvent formulation and concentration anticipated at the emission point (building exhaust). The use of activated carbon appears to have limited feasibility because of carbon adsorption interferences caused by the non-HAP, low volatility organic solvent used in the spinning process. In addition, the presence of a solvent with a high boiling point makes cost-effective measures such as on-site regeneration of the activated carbon less effective or viable for consideration. We, therefore, have not identified at this time a basis for requiring building exhaust control systems for solution processes. There can also be potential difficulties associated with retrofitting other conventional control technologies at existing fiber spinning lines. The particular solvents used on some spinning operations may require that a scrubber be installed in addition to a catalytic or thermal incinerator to control pollutants generated as by-products of combustion. In addition, the catalyst used for catalytic incineration devices may also be limited because the solvent used in some of the affected existing operations will foul or poison conventional catalyst.

iv. *What changes need to be made to the final rule for existing sources to reflect these considerations?* We concluded that there is no basis at this time to require capture and control systems for existing AMF fiber spinning operations. Therefore, the 85 percent control requirement is being removed for existing AMF spinning operations.

In addition, the solution and suspension processes are being treated separately in the final rule to better reflect spin dope AN concentrations and subsequent emissions relative to the two types of polymerization processes used in this industry. The performance requirement based on source reduction measures (i.e., formatted in terms of the spin dope AN concentration) is being retained for existing suspension polymerization processes; this will ensure that facilities continue to use the techniques they have already adopted. Therefore, a separate performance requirement or emission limit (i.e., the 100 ppmw spin dope criterion for suspension polymerization) is being included in the final rule to reflect the differences in spinning solution or spin dope residual AN concentrations and the technical feasibility of applying source reduction measures at existing facilities. In the proposed rule, the spin dope concentration limit was formatted as an applicability criterion for the spinning line control requirements; in the final rule, the format has been changed to specify the limit as an alternative performance standard. This is considered a format change only and does not result in any substantive changes to the source requirements. No control requirements are specified for solution polymerization processes at existing sources. We will reexamine the applicability of various control system options for spinning operations using the solution process during the residual risk analysis phase of these standards. Any new information will be collected and the viability of systems designed specifically for this industry will be assessed.

v. *Are there any changes for new sources?* The final requirements for AMF fiber spinning lines that are part of a new or modified source remain as proposed. The operating and design constraints that limit the application of enclosures and controls at new spinning operations (e.g., selection of solvents from a variety of possible solvents used for particular fibers, reactor process

previous experience does not apply to its circumstances, or to argue otherwise that the source category is not a suitable candidate for the generic MACT approach.

D. Date for Determining New Sources

One commenter expressed concern that sources in small categories subjected to Generic MACT in the future would be considered new sources if constructed or reconstructed after the proposal date for this current rulemaking. This result would not be reasonable and is not our intention. The date used to determine whether a source is a new source under section 112(a)(4) will be the date on which we specifically propose to apply Generic MACT standards to the source category in question.

VI. What Are the Significant Comments and Changes Made on the Proposed Standards?

A complete summary of the public comments on the generic MACT standards and our responses are presented in the BID for the promulgated standards, as referenced in the **ADDRESSES** section of this preamble. The summary of comments and responses in the BID serve as the basis for the revisions that have been made to the standards between proposal and promulgation. We received many comments addressing a wide variety of issues, including the generic MACT approach and the proposed standards. The comments have been carefully considered, and, where determined to be appropriate by the Administrator, changes have been made in the promulgated standards.

The following sections discuss the most significant issues raised by commenters and our responses to them.

A. MACT for Acrylic and Modacrylic Fiber Production—Changes Made Since Proposal

1. Definitions

In today's final rule for AMF production, a definition of "spin dope" has been added to resolve applicability issues and to clarify the intent of the standards for spinning lines under the rules. In the proposed rule, spinning line control requirements were based on an applicability cutoff for AN concentration in the "spinning solution or spin dope." Commenters stated that the use of the term spinning solution alone could cause some confusion because the bath into which the fiber polymer and solvent mixture (i.e., spin dope) is extruded is also referred to in these terms. They also suggested that the term "spin dope" be defined to clarify that the concentration cutoff refers to the AN content of the mixture of polymer and solvent that is fed to the spinneret to form the fibers. The final rule contains the definition of spin dope and clarifies the use of both terms, spinning solution and spin dope, for purposes of applicability to control requirements.

2. Standards for Spinning Lines

During the spinning process, unreacted monomer and organic solvent used to dissolve the polymer are volatilized into room air. Major process fugitive emission points include the filtering, spinning, washing, drying and crimping steps.

At proposal, we concluded that if enclosures were constructed to capture the spinning process emissions, the resulting enclosed emission streams would have similar characteristics to the process vent streams covered by other parts of this standard where we had already determined MACT for similar vents in the chemical and related industries. This is the basis for the synthetic fiber new source performance standard (NSPS), 40 CFR Part 60 Subpart HHH, regarding volatile organic compound (VOC) emissions. Because of the AMF industry fiber spinning emission similarities, we concluded that MACT for AMF fiber spinning lines with a spinning monomer AN concentration equal to or greater than 100 ppmw was the use of an enclosure around the spinning and washing areas of the spinning line and venting the captured emissions of the enclosure to an appropriate control device. The overall AN emission reductions proposed were to achieve overall control efficiency of greater than or equal to 85 percent by weight. This value was proposed and is based on the assumption that the enclosure achieves a minimum capture efficiency of 90 percent by weight, and the captured vapor stream is routed to an organic recovery or destruction control device that achieves a total HAP reduction of 95 percent by weight or greater.

The proposed rule contained flexibility for facilities in selecting methods to reduce HAP emissions from their operations. There are two types of polymerization and spinning operations utilized at AMF production plants: solution and suspension processes. Several of the plants using the suspension process have used source reduction/pollution prevention techniques to significantly reduce the amount of residual AN monomer in the fiber spinning solution or spin dope. By reducing the AN content prior to spinning and fiber processing, this source reduction technique reduces the amount of AN that is ultimately volatilized into the room air and emitted to the atmosphere. The proposal preamble argued that it was appropriate to establish an alternative for those owners and operators who prefer to use source reduction or pollution prevention measures to reduce spinning line AN emissions rather than install capture/add-on control systems for their spinning lines under the individual source standards. Specifically, a maximum limit on the residual AN content within the spinning monomer which provided a level of AN emission control comparable to add-on controls was proposed. This was represented by the 100 ppmw cutoff in table 2 of the proposed rule. Therefore, in the proposed rule, capture/add-on control systems were required only for those spinning lines using a spinning solution or spin dope having a total organic HAP (i.e., AN monomer) concentration equal or greater than 100 ppmw. The 100 ppmw criterion or action level was based on estimates of the amount of residual AN monomer in the spin dope found in suspension polymerization process with application of source reduction measures (i.e., pollution prevention) to remove the residual AN prior to spinning.

Public comments on the proposal argued that the similarity arguments regarding capture/add-on control systems were not valid. They also argued that there are differences between existing solution and suspension processes which need to be considered in establishing emission limits for existing processes. We reassessed the control requirements for spinning operations based on these comments. In doing so, a series of questions were considered, as outlined in the following paragraphs.

i. *Are there capture/control systems being used on spinning operations in this industry? Do we have MACT regulations requiring capture/add-on control for similar processes in other industries?* In practice, there are no AMF production facilities within this source category which have enclosed and captured the emissions from their spinning lines and vented them to a control device. The success of add-on controls system applications to existing fiber spinning lines relies on enclosure of the existing spinning lines. The MACT process vent rules used as the basis for the similarity argument in the proposal preamble apply to processes which are typically already enclosed (e.g., reactors) or very easily enclosed as a normal part of the process, whether

commenter also asserts that this cost-benefit analysis would consider potential differences in "public exposure" and "health benefits" between the sources in a small category and the sources from which a generic MACT standard was derived. These comments do not correctly interpret statutory requirements.

We are required to consider the cost of achieving emission reductions, and any non-air quality health and environmental impacts and energy requirements, in deciding what level of control constitutes MACT. This basic statutory requirement is applicable to all MACT standards, including any proposed generic MACT standard. Those emission controls which have already been demonstrated at facilities in the source category in question are obviously relevant to our determination of MACT. But the commenter is incorrect in implying that there is a direct connection between calculation of the MACT floor and the determination of MACT itself.

The assertion by this commenter that public exposure or the direct health benefits of reductions in HAP emissions are a factor in establishing MACT is also incorrect. Congress created the present statutory approach requiring MACT standards to replace a prior process where NESHAPs were based on health risks rather than on the practicality of controls. Although we do not consider health risks in determining MACT, the relative magnitude of the incremental emission reductions which particular controls would achieve may be an element in our determination whether particular controls would be cost effective. Moreover, there are other Section 112 programs such as the urban strategy and residual risk assessment where we will be considering the potential health risks presented by HAPs.

If a commenter persuades us that there are differences between a source or group of sources and the source categories from which we derived a generic MACT standard, and that these differences are sufficiently material to make adoption of that standard inappropriate (taking into account the cost of achieving emission reductions, and any non-air quality health and environmental impacts and energy requirements), we will establish MACT for that source or group of sources by an alternative methodology. In instances where it is appropriate, we may adopt such an alternative final standard as part of an existing rulemaking. We may also use elements of one of the standard standards in formulating an alternative standard for that source or group of sources.

Indeed, there is an example of this approach among the standards we are promulgating today. We originally proposed to apply the same generic standard to all AMF production facilities. During the comment period, one of these facilities persuaded us that there are significant differences between AMF spinning operations and the sources from which we derived the proposed standard for spinning operations, which make emission controls based on enclosure of AMF spinning impractical. The degree of control which is attainable without enclosure also differs depending on whether an existing facility uses a suspension polymerization or solution polymerization process. The final standard includes separate requirements for each of these two types of spinning operations, but is otherwise based on generic MACT procedures.

B. Criteria for Determining Suitability of Generic MACT

Three commenters noted that the criteria which we will use in deciding whether a small source category is a suitable candidate for use of generic MACT were discussed in the preamble of the proposal but were not included in the proposed regulatory text. These commenters recommended that we incorporate such criteria in the regulatory text.

We agree that objective criteria for making the determination of similarity are needed and that we should apply such criteria in a consistent manner each time we elect to utilize generic MACT procedures. We also agree that we should discuss the criteria we are utilizing, and the manner in which we have applied such criteria, whenever we decide that a small source category is an appropriate candidate for the generic MACT approach.

Although we do not believe that it is necessary that we incorporate such criteria in specific regulatory text, for the sake of clarity we will restate our criteria here. In deciding whether or not a source category or subcategory is sufficiently similar to a group of sources that we have previously regulated that it would be appropriate for us to derive generic control requirements from prior MACT determinations, we will consider each of the following factors:

(1) Differences in the volume and concentration of HAP emissions,

(2) Differences in the type of HAPs emitted,

(3) Differences in the type of emission points subject to control,

(4) Differences in the technical practicality and cost-effectiveness of emission controls,

(5) Whether the source category or subcategory being considered for generic control requirements presents unusual hazards that may have caused prior adoption of control requirements more stringent than those which would be derived from prior MACT determinations, and

(6) Whether sources in the source category or subcategory being considered for generic control requirements have already achieved emission limitations more stringent than those which would be derived from prior MACT determinations. In addition to these criteria, we may also decide to consider other factors in making future similarity determinations.

One commenter also raised a specific concern about the issue of similarity which suggests that the commenter did not fully understand our position. In the preamble we discussed factors which might undercut "the basic premise that [a small source category] is similar to the larger group of previously regulated sources." The commenter interpreted this statement as indicating that we might start with a basic premise of similarity for source categories under consideration for generic MACT which must then be refuted. This is an incorrect interpretation. We were referring to the basic premise of similarity which must be satisfied before we conclude that use of generic MACT is appropriate. We will apply our criteria first and will not select a source category for inclusion in generic MACT if we conclude that it is different in a material way from the sources we have previously regulated.

C. Adequacy of Notice and Comment

One commenter argues that, since sources in a small source category could not have anticipated that previous MACT determinations for large source categories would serve as precedents for the MACT determination for their source category, generic MACT procedures deny due process to such sources. We strongly disagree with this argument. Things we learn in developing one standard are often useful when we develop subsequent standards. There is no reason why we should not use our previous experience in a constructive manner merely because a regulated party did not participate in the prior rulemaking.

Each time generic MACT procedures are used, we will do notice and comment rulemaking. Each source in a small source category will have a full opportunity to explain why our

the MACT floor is derived from a subset of all sources in the category which have achieved greater control.

While we have concluded that the statutory scheme is in fact somewhat ambiguous with respect to deriving a MACT floor for source categories with five or fewer sources, in developing the generic MACT concept, we have nevertheless assumed that compliance with the MACT floor is required in all instances. However, we also have concluded that there are circumstances where we may reasonably determine compliance with the MACT floor without a separate numerical analysis. One circumstance where we believe a non-quantitative evaluation may be appropriate occurs when the information we have collected concerning sources in a small category (i.e. a category with five or fewer sources) supports a basic premise that they are similar to a larger group of previously regulated sources, and where we adopt a MACT standard which is based on the prior MACT determinations for the larger group of sources. In this circumstance, the small number of sources in the category, our prior experience with MACT determinations for similar sources in other categories, and the efficacious use of public and private resources make a non-quantitative evaluation of MACT floor compliance appropriate.

In each of the prior standards from which a generic MACT standard is derived, we selected a level of control equal to or greater than the MACT floor for the category in question, and each of those MACT floors was itself derived from a subset of the category in question consisting of the best-controlled facilities. So long as our evaluation of the sources in a small category according to our criteria for similarity (as summarized below) indicates that they are like the sources we previously regulated, and we do a separate MACT analysis rather than adopting a generic standard whenever we find that the sources in the small category have achieved greater control or are otherwise unlike the previously regulated sources in a meaningful way, we believe that a generic standard will meet all the statutory requirements.

Several commenters stated that the proposed generic MACT approach does not comply with the statutory scheme because a two-step analysis beginning with a numerical MACT floor determination is mandatory. To the extent that these comments are based on an assumption that our practice has always been to prepare a quantitative MACT floor analysis for a particular group of emission points before determining MACT for those emission points, this premise is incorrect. In some instances, we have determined that a particular MACT requirement is sufficient to assure compliance with the MACT floor based on a qualitative analysis of the emission points in question.

We are not suggesting that the question of compliance with the statutory MACT floor can be disregarded. If the commenters have concluded that we intend to ignore this issue in developing generic MACT standards, they have misunderstood our proposal. However, to the extent that the commenters instead are arguing that we have no discretion to establish alternate methodologies for determining compliance with the MACT floor, we disagree.

Even if we assume that the MACT floor provision applies to small categories, the statute requires only that we conclude that the MACT floor has been met by the promulgated standard. We do not agree that the statute requires us to use exactly the same methodology in every instance. A recent decision by the D.C. Court of Appeals expressly held that we "have wide latitude in determining the extent of data-gathering" required to determine compliance with the MACT floor, and that we may base our conclusions on a "reasonable inference." *Sierra Club* v. *EPA*, No. 97-1686 (D.C. Cir. March 2, 1999), slip op. at 7-9.

No source category will be selected for inclusion in the Generic MACT program until we have collected the information pertaining to sources in that category necessary to evaluate such sources according to the specific criteria for similarity set forth below. In practice, these criteria cannot be applied unless we have collected information which would also be sufficient to permit a general qualitative assessment of those existing controls which would represent the MACT floor for that category. If the information we have collected for a category which is a candidate for Generic MACT suggests that a MACT standard derived from our prior MACT determinations for sources in other categories would be less stringent than a MACT floor derived from such existing controls, we will not utilize Generic MACT in that instance. We believe our process for seeking early stakeholder involvement in development of a proposed standard will assure that we have sufficient information concerning existing emission controls at affected facilities to apply these criteria.

Generic MACT standards will always be adopted by notice and comment rulemaking. If we have incorrectly evaluated the issue of MACT floor compliance, affected sources in the category and other interested persons will have an opportunity to point this out during the comment period. If we conclude, based on such comments, that a small source category or one or more facilities within a small source category is not an appropriate candidate for generic MACT, we will not use our generic data base to determine MACT for that category or facility.

There were no commenters who argued directly that a standard developed using the generic MACT approach might be insufficiently stringent to satisfy the MACT floor, although certain industry commenters did state that omission of a separate numerical MACT floor analysis is impermissible. In evaluating this argument, we believe that the key point is that the standard that affected industry sources must ultimately meet is MACT itself, not the MACT floor.

If we were to erroneously adopt a Generic MACT standard less stringent than the MACT floor, this would have no adverse effect on the sources in question. Moreover, if we correctly determine MACT for a small source category and the resultant standard happens to be more stringent than the MACT floor for that category, the manner in which we determined compliance with the MACT floor would not be relevant when assessing any effect on the sources in question.

The commenters may believe that doing a quantitative MACT floor analysis will assist us in discovering meaningful differences between the sources in a small category and the larger groups of facilities used in deriving the generic MACT standard to be applied to that category. These commenters may be concerned that our utilizing a generic approach in developing certain MACT standards will cause us to disregard such differences. This type of concern about the quality of our analysis on the issue of similarity is reasonable. We agree that the issue of similarity must be carefully evaluated before we elect to utilize a generic MACT approach for sources in a small category.

One industry commenter states that the generic MACT approach does not meet statutory requirements because we must perform a "cost-benefit evaluation" for each decision to impose control requirements beyond the MACT floor. This commenter contends that this cost-benefit evaluation must be based on the incremental costs and benefits of additional controls as compared to the MACT floor. This

3. Fiber Spinning Lines

Spinning lines at suspension polymerization existing sources are required to reduce the spin dope AN concentration to 100 (ppmw) or less. No additional AN specific emission reduction levels have been identified in this final rule for these sources. No control requirements are specified in the final rule for existing spinning lines at solution polymerization sources. New and modified sources are required either to reduce AN emissions by greater than or equal to 85 percent. reduce the spin dope AN concentration to 100 ppmw. or limit spinning line emissions to 0.25 kilograms AN per Mg (0.5 lb AN per ton) of fiber produced.

4. Equipment Leaks

For equipment containing or contacting AN in amounts ≥10 percent. HAP emissions would be required to be controlled through the implementation of an LDAR program for affected equipment. This requirement applies to equipment leaks from compressors. agitators. pressure relief devices. sampling connection systems. open-ended valves or lines. valves. connectors. or instrumentation systems.

We chose to regulate AMF production facilities based on the control of pollutant streams containing AN. This pollutant is the principal HAP associated with and emitted from AMF production facilities. Other organic HAP constituents. where present. would only be associated with those pollutant streams containing AN. We expect that where sources control AN emissions. comparable levels of control will be achieved for other organic HAP emitted from AMF production facilities.

D. Hydrogen Fluoride Production Standards

The HF production standards regulate HAP emissions from storage vessels; process vents on HF recovery and refining vessels; bulk loading of HF liquid into tank trucks and railcars; and equipment leaks from compressors. agitators. pressure relief devices. sampling connection systems. open-ended valves or lines. valves. connectors. or instrumentation systems. Requirements are the same for both existing and new sources.

1. *Storage Vessels and Transfer Racks*

Storage vessels and transfer loading racks are required to control HF emissions by venting to a recovery system or wet scrubber designed and operated to achieve a 99 percent by weight removal efficiency.

2. *Process Vents From Continuous Unit Operations*

Process vents for HF recovery and refining are required to control HF emissions by venting emissions to a wet scrubber designed and operated to achieve a 99 percent by weight HF removal efficiency.

3. *Equipment Leaks*

All equipment leaks are controlled through a LDAR program.

E. Polycarbonate Production Standards

The PC production standards regulate organic HAP emissions from process vents. storage vessels. and equipment leaks. Different requirements and applicability criteria apply for existing and new sources.

1. *Storage Vessels*

Storage vessels with specified sizes that store materials with specified vapor pressures are required to control organic HAP emissions by using an external floating roof equipped with specified primary and secondary seals; by using a fixed roof with an internal floating roof equipped with specified seals; or by venting emissions through a closed vent system to a control device. Some vessels must use a closed vent system and recovery or control device. based on vessel size and the vapor pressure of the stored material.

2. *Process Vents*

Process vents from continuous unit operations and combined vent streams (combinations of streams from continuous and/or batch unit operations) that have a TRE index value less than or equal to 2.7 are required to control organic HAP emissions by venting emissions through a closed vent system to a control device that reduces total organic HAP by 98 percent by weight. or reduces the concentration of total organic HAP or TOC to 20 ppmv. whichever is less stringent.

3. *Equipment Leaks*

For equipment containing or contacting organic HAP in amounts ≥ 5 percent. organic HAP emissions are required to be controlled through the implementation of an LDAR program for affected equipment.

IV. What Are the Impacts Associated With the Final Rule?

The impacts resulting from the promulgated standards for the source categories (i.e., AR production. AMF production. HF production. and PC production) are determined relative to the baseline that is set at the level of control in absence of the rule. The emissions reductions associated with the application of the control or recovery devices for the regulated source categories are expected to be small as the AR. AMF. HF. and PC production facilities affected by this rule essentially already have a level of control equivalent to that determined to be MACT.

Based on previous impacts analyses associated with the application of the control and recovery devices required under the standards and because each of the four regulated source categories have only five or fewer major sources. we believe that there will be minimal. if any. adverse environmental or energy impacts associated with the final standards.

Likewise. based on available information. we estimate that the cost and economic impacts of the final standards for the four source categories being regulated will be insignificant or minimal. The economic analyses for each of the four source categories can be obtained from the dockets established for these source categories (see ADDRESSES).

V. The Legal Basis for Generic MACT Approach

A. The Generic MACT Approach

The basic objectives of generic MACT are to conserve our limited resources. avoid unnecessary duplication of effort. and encourage consistency in our regulatory determinations. The generic MACT concept is based on applying the knowledge that we have already gained in the development of MACT standards under section 112 of the Act to source categories with a small number of facilities. As the source category becomes smaller. the likelihood that the best control strategies will have already been implemented for the sources in that category also becomes smaller. Thus. as the source category becomes smaller. it is more important for us when determining MACT for existing sources to consider control strategies that have been evaluated for similar types of sources in other source categories.

Just as we need to look beyond the source category itself in determining MACT for smaller source categories. the statutory MACT floor becomes increasingly less important as a regulatory safeguard as the number of facilities used to determine it declines. This is not only because the existing emission controls in a small source category are likely to be less representative of the range of practical technologies and strategies. It also is because. in the larger source categories.

3. Compliance Schedule

The compliance schedule section of the final rule provides compliance dates for new and existing sources.

4. Source Category-specific Applicability, Definitions, and Standards

The source category-specific applicability, definitions and standards section of the final rule specifies the definitions, and standards that apply to an affected source based on applicability criteria, for each source category.

5. Applicability Assessment Procedures and Methods

If you are an owner or operator of an affected source, the applicability assessment procedures and methods sections of the final rule provide procedures for you to follow when assessing whether control requirements under the standard applicability section of the rule apply. Standard applicability assessment procedures (as applicable) are footnoted in the standard requirement applicability tables specified for each source category.

6. Generic Standards and Procedures for Approval for an Alternative Means of Emissions Limitation

The remaining sections of the final rule contain provisions that apply across source categories within the generic MACT subpart. These provisions include generic compliance, maintenance, monitoring, recordkeeping, and reporting requirements. An alternative means of emission limitation to the design, operational, work practice, or equipment standards specified for each source category within the generic MACT subpart may also be established as provided in § 63.1113 of 40 CFR part 63, subpart YY (Generic MACT Standards).

B. Acetal Resins Production Standards

The AR production standard regulates HAP emissions from storage vessels storing process feed materials, process vents, and equipment leaks from compressors, agitators, pressure relief devices, sampling connection systems, open-ended valves or lines, valves, connectors, and instrumentation systems. Requirements are the same for both existing and new sources.

1. Storage Vessels

Storage vessels with specified sizes that store materials with specified vapor pressures are required to control HAP emissions by using an external floating roof equipped with specified primary and secondary seals; by using a fixed roof with an internal floating roof equipped with specified seals; or by covering and venting emissions through a closed vent system to one of the following:

a. A recovery device or an enclosed combustion device that achieves a HAP control efficiency ≥ 95 percent.

b. A flare.

2. Process Vents From Continuous Unit Operations (Back End and Front End Process Vents)

Front end process vents are required to control HAP or total organic compound (TOC) emissions by venting emissions through a closed vent system to a flare, or venting emissions through a closed vent system to any combination of control devices that reduces emissions of HAP or TOC by 60 percent by weight or to a concentration of 20 ppmv, whichever is less stringent. Back end process vents with a total resource effectiveness index value (TRE) less than 1.0 are required to control HAP or TOC emissions by venting emissions through a closed vent system to a flare, or avoid control requirements venting emissions through a closed vent system to any combination of control devices that reduces emissions of HAP or TOC by 98 percent by weight or to a concentration of 20 parts per million by volume (ppmv), whichever is less stringent; or by achieving and maintaining a TRE index value greater than 1.0.

3. Equipment Leaks

For equipment containing or contacting HAP in amounts ≥ 5 percent, HAP emissions are required to be controlled through the implementation of a leak detection and repair (LDAR) program for affected equipment.

C. Acrylic and Modacrylic Fibers Production Standards

The final standards for AMF production consist of standards that regulate acrylonitrile (AN) emissions from storage vessels, process vents, fiber spinning lines, process wastewater treatment systems; and equipment leaks. Requirements for individual sources are, for the most part, the same for both existing and new sources. The one exception is fiber spinning lines. The requirements for spinning lines at new or modified sources remain the same as those proposed (i.e., an 85 percent AN reduction) with the addition of an alternative performance standard that limits spinning line emissions to 0.25 kilograms AN per megagram (Mg) of fiber produced.

The requirements for existing spinning lines at existing AMF sources have been revised to better reflect existing spinning solution AN concentrations and subsequent emissions relative to the two types of polymerization processes used in the industry. Separate control requirements are being included in the final rule to reflect the differences in the two polymerization processes relative to spinning solution or spin dope residual AN concentrations and the technical feasibility of applying source reduction measures.

As an alternative to these individual source requirements, if you own or operate an affected AMF production facility you can comply with the final rule by controlling facility-wide AN emissions (not including equipment leaks) to a level such that emissions do not exceed 0.5 kilograms of AN per Mg of fiber produced (1.0 pound AN per ton of fiber produced) for existing sources, and 0.25 kilograms of AN per Mg of fiber produced (0.5 pounds AN per ton of fiber produced) for new sources.

1. Storage Vessels

Storage vessels storing process feed material would be required to control AN emissions by using an external floating roof equipped with specified primary and secondary seals; using a fixed roof with an internal floating roof equipped with specified seals; or by venting emissions through a closed-vent system to one of the following:

a. A recovery device that achieves a HAP control efficiency ≥95 percent;

b. An enclosed combustion control device that achieves a HAP control efficiency ≥98 percent; or

c. A flare.

2. Continuous Process Vents

Process vents with vent streams with a HAP concentration ≥50 ppmv would be required to control HAP emissions by venting vapors through a closed-vent system to a recovery or control device that reduces emissions of HAP or TOC by 98 weight-percent or to a concentration of 20 ppmv, whichever is less stringent, by using a flare or by venting and using any combination of combustion, recovery, and/or recapture devices. If the controlled vent stream is halogenated, emissions are required to be vented to a halogen reduction device that reduces hydrogen halides and halogens by 99 percent or to less than 0.45 kilograms per hour (kg/hr) either prior to or after (other than by using a flare) reducing the HAP or TOC by 98 weight-percent.

fluoride production source category was scheduled for promulgation by the year 2000 but was changed to be scheduled for promulgation by 1997. We are promulgating standards for the AR, AMF, HF, and PC production source categories under a May 15, 1999 court-ordered deadline.

II. What Factors Did We Consider When Developing These Standards?

A. Promotion of Public Health and Welfare

The Act was developed, in part,

> * * * to protect and enhance the quality of the Nation's air resources so as to promote the public health and welfare and productive capacity of its population [the Act, section 101(b)(1)].

Sources that would be subject to the standards promulgated for each of the source categories (i.e., AR production, AMF production, HF production, PC production) with today's consolidated rulemaking package are major sources of HAP emissions on our list of categories scheduled for regulation under section 112(c)(1) of the Act. Major sources of HAP emissions are those sources that have the potential to emit greater than 9.1 megagrams per year (Mg/yr) (10 tons per year (tpy)) of any one HAP or 22.7 Mg/yr (25 tpy) of any combination of HAP. The HAP that would be controlled with today's consolidated rulemaking package are associated with a variety of adverse health effects. Adverse health effects associated with HAP include chronic health disorders (e.g., cancer, aplastic anemia, pulmonary (lung) structural changes), and acute health disorders (e.g., dyspnea (difficulty in breathing), and neurotoxic effects.

B. Statutory and Technical Considerations

We regulate stationary sources of HAP under section 112 of the Act. Section 112(b) (as amended) of the Act lists 188 chemicals, compounds, or groups of chemicals as HAP. Under section 112, we are directed to regulate the emission of HAP from stationary sources by establishing national emission standards.

Section 112(a)(1) of the Act defines a major source as:

> * * * any stationary source or group of stationary sources located within a contiguous area and under common control that emits or has the potential-to-emit, considering controls, in the aggregate 10 tons per year (tpy) or more of any HAP or 25 tpy or more of any combination of HAP.

The statute requires that we establish standards to reflect the maximum degree of reduction in HAP emissions through application of MACT for major sources on our list of categories scheduled for regulation under section 112(c)(1) of the Act. We are required to establish standards that are no less stringent than the level of control defined under section 112(d)(3) of the Act (this minimal level of control is referred to as the "MACT floor."

We chose to regulate the AR production, AMF production, HF production, and PC production source categories under one subpart to streamline the regulatory burden associated with the development of separate rulemaking packages. All of these source categories have four or fewer major sources that would be subject to the standards. This subpart is referred to as the "generic MACT standards" subpart. The generic MACT standards subpart has been structured to allow source categories with similar emission points and MACT control requirements to be covered under one subpart.

In the proposal preamble, we provide a discussion on the approach used to collect and evaluate information pertaining to MACT and the rationale for our approach for determining MACT for source categories with a limited population of sources (see 63 FR 55181–55184, October 24, 1998). The rationale for the MACT determination under the MACT standards for the AR production, AMF production, HF production, and PC production source categories is also described in the proposal preamble (see 63 FR 55191–55196, October 24, 1998).

C. Stakeholder and Public Participation

Representatives of the AR production, AMF production, HF production, and PC production industries and State and local agencies were consulted in the development of the proposed standards. Documentation for stakeholder and public participation for these source categories is included in the docket for these standards (Docket No. A–97–17). Source category-specific supporting information is maintained within dockets established for each of these source categories (see **ADDRESSES** section of this preamble for Docket information).

The generic MACT standards were proposed in the **Federal Register** on October 14, 1998 (63 FR 55178). We placed the proposed notice and regulatory text, along with supporting documentation, in a docket open to the public at that time and made them available to interested parties. Public comments were solicited at the time of proposal. Comments were specifically requested on the proposed generic MACT approach and the emission point general control requirement subparts.

To provide interested parties the opportunity for oral presentation of data, views, or arguments concerning the proposed standards, a public hearing was offered on November 25, 1998 in Research Triangle Park, North Carolina.

The public comment period was from October 14, 1998 to January 12, 1999. The most significant comments and responses are discussed in section VI of this preamble.

III. What Are the Final Standards?

The final rule promulgates standards for AR production, AMF production, HF production, and PC production that include requirements that reflect existing emission point control requirements for similar sources; requirements that are source category-specific; and requirements that apply to all source categories that are regulated under the generic MACT standards subpart (e.g., general recordkeeping, reporting, compliance, operation, and maintenance requirements). Section III.A of this preamble presents the generic MACT standards subpart structure, and sections III.B through III.E present a summary of the promulgated standards applicable to each of the source categories in the final rule.

The final rule applies to process units and emission points that are part of a plant site that is a major source as defined in section 112 of the Act. The applicability section of the regulation specifies what source categories are being regulated and defines the emission points subject to the rule.

A. Generic MACT Rule Structure

The following discussion presents a summary of the structure of the standards included in the final rule.

1. Applicability

The final rule allows source categories with similar emission points and MACT control requirements to be covered under one subpart. The applicability section specifies the source categories and affected source for each of the source categories subject to the generic MACT standards. This section also clarifies the applicability of certain emission point provisions for which both the generic MACT standards subpart and other existing Federal regulations might apply.

2. *Definitions*

The definitions section of the final rule specifies definitions that apply across source categories.

Information Type	Contact	EPA Office/Region	Phone
AR Production	Lee Page	Region IV	(404) 562–9131
	Robert Todd	Region VI	(214) 665–2156
AMF Production	Lee Page	Region IV	(404) 562–9131
HF Production	Robert Todd	Region VI	(214) 665–2156
PC Production	Lee Page	Region IV	(404) 562–9131
	Bruce Varner	Region V	(312) 886–6793
	Robert Todd	Region VI	(214) 665–2156

SUPPLEMENTARY INFORMATION: The SNPR, the promulgated regulatory text, and supporting documentation are available in Docket No. A–97–17 or by request from our Air and Radiation Docket and Information Center (see **ADDRESSES**). The SNPR and the promulgated regulatory text are also available on the Technology Transfer Network (TTN) on our electronic bulletin boards. The TTN provides information and technology exchange in various areas of air emissions control. The service is free, except for the cost of a telephone call. Dial (919) 541–5742 for up to a 14,400 baud per second modem. For further information, contact the TTN HELP line at (919) 541–5384, from 1:00 p.m. to 5:00 p.m. Monday through Friday, or access the TTN web site at: http://www.epa.gov/ttn.

Regulated Entities

Entities potentially regulated are those that produce AR, AMF, HF, and PC and are major sources of HAP as defined in section 112 of the Act. Regulated categories and entities include the following:

Category	Regulated entities [a]
Industry	Producers of homopolymers and/or copolymers of alternating oxymethylene units.
	Producers of either acrylic fiber or modacrylic fiber synthetics composed of acrylonitrile (AN) units.
	Producers of, and recoverers of HF by reacting calcium fluoride with sulfuric acid. For the purpose of implementing the rule, HF production is not a process that produces gaseous HF for direct reaction with hydrated aluminum to form aluminum fluoride (i.e., the HF is not recovered as an intermediate or final product prior to reacting with the hydrated aluminum).
	Producers of polycarbonate.

[a] This table is not intended to be exhaustive, but rather provides a guide for readers regarding entities likely to be regulated by this action. This table lists the types of entities that we are now aware could potentially be regulated by this action. Other types of entities not listed in the table could also be regulated. To determine whether your facility, company, business, organization, etc., is regulated by this action, you should carefully examine the applicability criteria in § 63.1104(a)(1), (b)(1), (c)(1), and (d)(1) of the rule. If you have questions regarding the applicability of this action to a particular entity, consult the person listed in the preceding **FOR FURTHER INFORMATION CONTACT** section.

Judicial Review

Under section 307(b)(1) of the Act, judicial review of this final rule is available only by filing a petition for review in the United States Court of Appeals for the District of Columbia Circuit by August 30, 1999. Under section 307(d)(7)(B) of the Act, only an objection to this rule which was raised with reasonable specificity during the period for public comment can be raised during judicial review. Moreover, under section 307(b)(2) of the Act, the requirements established by today's final action may not be challenged separately in any civil or criminal proceeding brought by us to enforce these requirements.

Plain Language

In compliance with President Clinton's June 1, 1998 Executive Memorandum on Plain Language in government writing, this preamble is written using plain language. Thus, the use of "we," "us," or "our" in this notice refers to the EPA. The use of "you" refers to the reader, and may include industry; State, local, and tribal governments; environmental groups; and other interested individuals.

The following outline is provided to assist you in reading this preamble.

I. Why have we developed these regulations?
II. What factors did we consider when developing these standards?
  A. Promotion of Public Health and Welfare
  B. Statutory and Technical Considerations
  C. Stakeholder and Public Participation
III. What are the final standards?
  A. Generic MACT Rule Structure
  B. Acetal Resins Production Standards
  C. Acrylic and Modacrylic Fibers Production Standards
  D. Hydrogen Fluoride Production Standards
  E. Polycarbonate Production Standards
IV. What are the impacts associated with the final rule?
V. The Legal Basis for the Generic MACT Approach
  A. The Generic MACT Approach
  B. Criteria for Determining Suitability for Generic MACT
  C. Adequacy of Notice and Comment
  D. Date for Determining New Sources
VI. What are the significant comments and changes made on the proposed standards?
  A. MACT for Acrylic and Modacrylic Fiber Production—Changes Made Since Proposal
  B. Process and Maintenance Wastewater Stream Provisions
VII. Administrative Requirements
  A. Docket
  B. Paperwork Reduction Act
  C. Executive Order 12866
  D. Executive Order 12875
  E. Regulatory Flexibility Act/Small Business Regulatory Enforcement Fairness Act of 1996
  F. Unfunded Mandates Reform Act
  G. Submittal to Congress and the General Accounting Office
  H. National Technology Transfer and Advancement Act
  I. Executive Order 13045
  J. Executive Order 13084

I. Why Have We Developed These Regulations?

Section 112(b) of the Act (as amended) lists 188 HAP's and directs us to develop rules to control all major and some area sources emitting HAP. On July 16, 1992 (57 FR 31576), we published a list of major and area sources for which NESHAP are to be promulgated. On December 3, 1993 (58 FR 83941), we published a schedule for promulgating standards for the listed major and area sources. Standards for the acetal resins production, acrylic and modacrylic fiber production, and polycarbonate production source categories were scheduled for promulgation by 1997. The hydrogen

ENVIRONMENTAL PROTECTION AGENCY

40 CFR Part 63

[AD–FRL–6346–9]

RIN 2060–AG91, 2060–AF06, 2060–AG94, 2060–AF09, 2060–AE36

National Emission Standards for Hazardous Air Pollutants: Generic Maximum Achievable Control Technology (Generic MACT)

AGENCY: Environmental Protection Agency (EPA).

ACTION: Final rule.

SUMMARY: This action promulgates the consolidated rulemaking proposal published on October 14, 1998. Today's rule establishes our "generic MACT standards" program for setting national emission standards for hazardous air pollutants (NESHAP) under section 112 of the Clean Air Act (Act) for certain small source categories consisting of five or fewer major sources. As part of this generic MACT program, we are establishing an alternative methodology for making maximum achievable control technology (MACT) determinations for appropriate small categories by referring to previous MACT standards that have been promulgated for similar sources in other categories. The basic purposes of the generic MACT program are to use public and private sector resources efficiently, and to promote regulatory consistency and predictability in MACT standards development.

Today's consolidated rulemaking package includes promulgated MACT standards that have been developed within the generic MACT framework for four specific source categories that are included on our list of categories for which NESHAP are required: acetal resins (AR) production, acrylic and modacrylic fiber (AMF) production, hydrogen fluoride (HF) production, and polycarbonate(s) (PC) production.

In this consolidated rulemaking package, we are also promulgating general control requirements for certain types of emission points for hazardous air pollutants (HAP), which will then be referenced, as appropriate, in MACT requirements for individual source categories. These general control requirements are set forth in new promulgated subparts and are applicable to storage vessels containing organic materials, process vents emitting organic vapors, and leaks from equipment components. In addition, we are promulgating a separate subpart of requirements for closed vent systems, control devices, recovery devices and routing emissions to fuel gas systems or a process.

We have withdrawn the proposed process wastewater provisions from the promulgated rule. In a supplemental notice of proposed rulemaking (SNPR) published elsewhere in today's **Federal Register**, we reopen the comment period (for 30 days) specifically to request additional comment on amendments to the proposed standards for process wastewater provisions for the AR, AMF, and PC production source categories. We plan to take final action regarding the amendments to the proposed provisions for process wastewater streams by November 15, 1999 (the revised date set forth in a proposed consent decree).

EFFECTIVE DATE: The effective date is June 29, 1999.

ADDRESSES: *Technical Support Document.* The consolidated rulemaking package promulgated today is supported by a background information document (BID) that contains a summary of the public comments received on the proposal and the Administrator's responses to public comments. This document may be obtained from the docket for this rule, A–97–17, or through the Internet at http://www.epa.gov/ttn/oarpg/ramain.html or from the U.S. Environmental Protection Agency Library (MD–35), Research Triangle Park, North Carolina 27711, telephone (919) 541–2777. Please refer to "National Emission Standards for Hazardous Air Pollutants: Generic Maximum Achievable Control Technology—Background Information for Acetal Resins, Acrylic and Modacrylic Fiber, Hydrogen Fluoride, and Polycarbonate Production Promulgated Standards," EPA–453/C–99–001.

Docket. A docket, No. A–97–17, containing information considered by us in the development of the proposed and promulgated standards for the generic MACT, is available for public inspection between 8:30 a.m. and 5:30 p.m., Monday through Friday (except for Federal holidays), at the following address: U.S. Environmental Protection Agency, Air and Radiation Docket and Information Center (MC–6102), 401 M Street SW, Washington DC 20460, telephone: (202) 260–7548. Our Air Docket section is located at the above address in Room M–1500, Waterside Mall (ground floor). Dockets established for each of the source categories assimilated under the generic MACT standards with this promulgation include the following: AR production (Docket No. A–97–19); AMF production (Docket No. A–97–18); HF production (Docket No. A–96–54); and PC production (Docket No. A–97–16). These dockets include source category-specific supporting information. The proposed and promulgated standards, and supporting information are available for inspection and copying. A reasonable fee may be charged for copying.

FOR FURTHER INFORMATION CONTACT: For information concerning the promulgated standards, contact the following at the Emission Standards Division (MD–13), U.S. Environmental Protection Agency, Research Triangle Park, North Carolina 27711:

Information Type	Contact	Group	Phone/Facsimile/ e-mail address
AR Production	John M. Schaefer	Organic Chemicals Group	(919) 541–0296/(919) 541–3470/ schaefer.john@epa.gov
AMF Production	Anthony P. Wayne	Policy, Planning and Standards Group.	(919) 541–5439/(919) 541–0942/ wayne. tony@epa.gov
HF Production	Richard S. Colyer	Policy, Planning, and Standards Group.	(919) 541–5262/(919) 541–0942/ colyer.rick@epa.gov
PC Production	Mark A. Morris	Organic Chemicals Group	(919) 541–5416/(919) 541–3470/ morris.mark@epa.gov
Recordkeeping and Reporting Requirements.	Belinda Breidenbach	Office of Enforcement and Compliance Assurance.	(202) 564–7022
Nonsource category-specific	David W. Markwordt	Policy, Planning and Standards Group.	(919) 541–0837/ (919) 541–0942/ markwordt.david@epa.gov

The EPA Region contacts are as follows:

ENVIRONMENTAL PROTECTION AGENCY

40 CFR Part 63

[AD-FRL-6346-9]

RIN 2060-AG91, 2060-AF06, 2060-AG94, 2060-AF09, 2060-AE36

National Emission Standards for Hazardous Air Pollutants: Generic Maximum Achievable Control Technology (Generic MACT)

AGENCY: Environmental Protection Agency (EPA).

ACTION: Final rule.

SUMMARY: This action promulgates the consolidated rulemaking proposal published on October 14, 1998. Today's rule establishes our "generic MACT standards" program for setting national emission standards for hazardous air pollutants (NESHAP) under section 112 of the Clean Air Act (Act) for certain small source categories consisting of five or fewer major sources. As part of this generic MACT program, we are establishing an alternative methodology for making maximum achievable control technology (MACT) determinations for appropriate small categories by referring to previous MACT standards that have been promulgated for similar sources in other categories. The basic purposes of the generic MACT program are to use public and private sector resources efficiently, and to promote regulatory consistency and predictability in MACT standards development.

Today's consolidated rulemaking package includes promulgated MACT standards that have been developed within the generic MACT framework for four specific source categories that are included on our list of categories for which NESHAP are required: acetal resins (AR) production, acrylic and modacrylic fiber (AMF) production, hydrogen fluoride (HF) production, and polycarbonate(s) (PC) production.

In this consolidated rulemaking package, we are also promulgating general control requirements for certain types of emission points for hazardous air pollutants (HAP), which will then be referenced, as appropriate, in MACT requirements for individual source categories. These general control requirements are set forth in new promulgated subparts and are applicable to storage vessels containing organic materials, process vents emitting organic vapors, and leaks from equipment components. In addition, we are promulgating a separate subpart of requirements for closed vent systems, control devices, recovery devices and routing emissions to fuel gas systems or a process.

We have withdrawn the proposed process wastewater provisions from the promulgated rule. In a supplemental notice of proposed rulemaking (SNPR) published elsewhere in today's **Federal Register**, we reopen the comment period (for 30 days) specifically to request additional comment on amendments to the proposed standards for process wastewater provisions for the AR, AMF, and PC production source categories. We plan to take final action regarding the amendments to the proposed provisions for process wastewater streams by November 15, 1999 (the revised date set forth in a proposed consent decree).

EFFECTIVE DATE: The effective date is June 29, 1999.

ADDRESSES: *Technical Support Document.* The consolidated rulemaking package promulgated today is supported by a background information document (BID) that contains a summary of the public comments received on the proposal and the Administrator's responses to public comments. This document may be obtained from the docket for this rule, A-97-17, or through the Internet at http://www.epa.gov/ttn/oarpg/ramain.html or from the U.S. Environmental Protection Agency Library (MD-35), Research Triangle Park, North Carolina 27711, telephone (919) 541-2777. Please refer to "National Emission Standards for Hazardous Air Pollutants: Generic Maximum Achievable Control Technology—Background Information for Acetal Resins, Acrylic and Modacrylic Fiber, Hydrogen Fluoride, and Polycarbonate Production Promulgated Standards." EPA-453/C-99-001.

Docket. A docket, No. A-97-17, containing information considered by us in the development of the proposed and promulgated standards for the generic MACT, is available for public inspection between 8:30 a.m. and 5:30 p.m., Monday through Friday (except for Federal holidays), at the following address: U.S. Environmental Protection Agency, Air and Radiation Docket and Information Center (MC-6102), 401 M Street SW, Washington DC 20460, telephone: (202) 260-7548. Our Air Docket section is located at the above address in Room M-1500, Waterside Mall (ground floor). Dockets established for each of the source categories assimilated under the generic MACT standards with this promulgation include the following: AR production (Docket No. A-97-19); AMF production (Docket No. A-97-18); HF production (Docket No. A-96-54); and PC production (Docket No. A-97-16). These dockets include source category-specific supporting information. The proposed and promulgated standards, and supporting information are available for inspection and copying. A reasonable fee may be charged for copying.

FOR FURTHER INFORMATION CONTACT: For information concerning the promulgated standards, contact the following at the Emission Standards Division (MD-13), U.S. Environmental Protection Agency, Research Triangle Park, North Carolina 27711:

Information Type	Contact	Group	Phone/Facsimile/ e-mail address
AR Production	John M. Schaefer	Organic Chemicals Group	(919) 541-0296/(919) 541-3470/ schaefer.john@epa.gov
AMF Production	Anthony P. Wayne	Policy, Planning and Standards Group.	(919) 541-5439/(919) 541-0942/ wayne. tony@epa.gov
HF Production	Richard S. Colyer	Policy, Planning, and Standards Group.	(919) 541-5262/(919) 541-0942/ colyer.rick@epa.gov
PC Production	Mark A. Morris	Organic Chemicals Group	(919) 541-5416/(919) 541-3470/ morris.mark@epa.gov
Recordkeeping and Reporting Requirements.	Belinda Breidenbach	Office of Enforcement and Compliance Assurance.	(202) 564-7022
Nonsource category-specific	David W. Markwordt	Policy, Planning and Standards Group.	(919) 541-0837/ (919) 541-0942/ markwordt.david@epa.gov

The EPA Region contacts are as follows:

TABLE 4 TO SUBPART MMM OF PART 63—CONTROL REQUIREMENTS FOR ITEMS OF EQUIPMENT THAT MEET THE CRITERIA OF § 63.1362(K)

Item of equipment	Control requirement [a]
Drain or drain hub	(a) Tightly fitting solid cover (TFSC); or (b) TFSC with a vent to either a process, or to a control device meeting the requirements of § 63.1256(h)(2); or (c) Water seal with submerged discharge or barrier to protect discharge from wind.
Manhole [b]	(a) TFSC; or (b) TFSC with a vent to either a process, or to a fuel gas system, or to a control device meeting the requirements of § 63.1256(h)(2); or (c) If the item is vented to the atmosphere, use a TFSC with a properly operating water seal at the entrance or exit to the item to restrict ventilation in the collection system. The vent pipe shall be at least 90 cm in length and not exceeding 10.2 cm in nominal inside diameter.
Lift station	(a) TFSC; or (b) TFSC with a vent to either a process, or to a control device meeting the requirements of § 63.1256(h)(2); or (c) If the lift station is vented to the atmosphere, use a TFSC with a properly operating water seal at the entrance or exit to the item to restrict ventilation in the collection system. The vent pipe shall be at least 90 cm in length and not exceeding 10.2 cm in nominal inside diameter. The lift station shall be level controlled to minimize changes in the liquid level.
Trench	(a) TFSC; or (b) TFSC with a vent to either a process, or to a control device meeting the requirements of § 63.1256(h)(2); or (c) If the item is vented to the atmosphere, use a TFSC with a properly operating water seal at the entrance or exit to the item to restrict ventilation in the collection system. The vent pipe shall be at least 90 cm in length and not exceeding 10.2 cm in nominal inside diameter.
Pipe	Each pipe shall have no visible gaps in joints, seals, or other emission interfaces.
Oil/Water separator	(a) Equip with a fixed roof and route vapors to a process, or equip with a closed-vent system that routes vapors to a control device meeting the requirements of § 63.1256(h)(2); or (b) Equip with a floating roof that meets the equipment specifications of § 60.693 (a)(1)(i), (a)(1)(ii), (a)(2), (a)(3), and (a)(4).
Tank	Maintain a fixed roof.[c] If the tank is sparged [d] or used for heating or treating by means of an exothermic reaction, a fixed roof and a system shall be maintained that routes the organic hazardous air pollutants vapors to other process equipment or a fuel gas system, or a closed-vent system that routes vapors to a control device that meets the requirements of 40 CFR § 63.119(e)(1) or (e)(2).

[a] Where a tightly fitting solid cover is required, it shall be maintained with no visible gaps or openings, except during periods of sampling, inspection, or maintenance.
[b] Manhole includes sumps and other points of access to a conveyance system.
[c] A fixed roof may have openings necessary for proper venting of the tank, such as pressure/vacuum vent, j-pipe vent.
[d] The liquid in the tank is agitated by injecting compressed air or gas.

[FR Doc. 99-12754 Filed 6-22-99; 8:45 am]
BILLING CODE 6560-50-P

TABLE 2 TO SUBPART MMM OF PART 63—STANDARDS FOR NEW AND EXISTING PAI SOURCES—Continued

Emission source	Applicability	Requirement
Wastewater[a]	Existing: Process wastewater with ≥10,000 ppmw Table 9 compounds at any flowrate or ≥1,000 ppmw Table 9 compounds at ≥10 L/min, and maintenance wastewater with HAP load ≥5.3 Mg per discharge event.	Reduce concentration of total Table 9 compounds to <50 ppmw (or other options).
	New:	
	Same criteria as for existing sources	Reduce concentration of total Table 9 compounds to <50 ppmw (or other options).
	Total HAP load in wastewater POD streams ≥2,100 Mg/yr..	99% reduction of Table 9 compounds from all streams.
Equipment leaks	Subpart H	Subpart H with minor changes, including monitoring frequencies consistent with the proposed CAR.
Product dryers and bag dumps.	Dryers used to dry PAI that is also a HAP, and bag dumps used to introduce feedstock that is a solid and a HAP.	Particulate matter concentration not to exceed 0.01 gr/dscf.
Heat exchange systems.	Each heat exchange system used to cool process equipment in PAI manufacturing operations.	Monitoring and leak repair program as in HON.

[a] Table 9 is listed in the appendix to subpart G of 40 CFR part 63.

TABLE 3 TO SUBPART MMM OF PART 63—MONITORING REQUIREMENTS FOR CONTROL DEVICES[a]

Control device	Monitoring equipment required	Parameters to be monitored	Frequency
All control devices	1. Flow indicator installed at all bypass lines to the atmosphere and equipped with continuous recorder or.	1. Presence of flow diverted from the control device to the atmosphere or.	Hourly records of whether the flow indicator was operating and whether a diversion was detected at any time during each hour.
	2. Valves sealed closed with car-seal or lock-and-key configuration.	2. Monthly inspections of sealed valves.	Monthly.
Scrubber	Liquid flow rate or pressure drop mounting device. Also a pH monitor if the scrubber is used to control acid emissions..	1. Liquid flow rate into or out of the scrubber or the pressure drop across the scrubber..	1. Every 15 minutes.
		2. pH of effluent scrubber liquid	2. Once a day.
Thermal incinerator	Temperature monitoring device installed in firebox or in ductwork immediately downstream of firebox[b].	Firebox temperature	Every 15 minutes.
Catalytic incinerator	Temperature monitoring device installed in gas stream immediately before and after catalyst bed.	Temperature difference across catalyst bed.	Every 15 minutes.
Flare	Heat sensing device installed at the pilot light.	Presence of a flame at the pilot light.	Every 15 minutes.
Boiler or process heater <44 megawatts and vent stream is not mixed with the primary fuel.	Temperature monitoring device installed in firebox[b].	Combustion temperature	Every 15 minutes.
Condenser	Temperature monitoring device installed at condenser exit.	Condenser exit (product side) temperature.	Every 15 minutes.
Carbon adsorber (nonregenerative)	None	Operating time since last replacement.	N/A.
Carbon adsorber (regenerative)	Stream flow monitoring device, and.	1. Total regeneration stream mass or volumetric flow during carbon bed regeneration cycle(s).	1. For each regeneration cycle, record the total regeneration stream mass or volumetric flow.
	Carbon bed temperature monitoring device.	2. Temperature of carbon bed after regeneration.	2. For each regeneration cycle, record the maximum carbon bed-temperature.
		3. Temperature of carbon bed within 15 minutes of completing any cooling cycle(s).	3. Within 15 minutes of completing any cooling cycle, record the carbon bed temperature.
		4. Operating time since end of last regeneration.	4. Operating time to be based on worst-case conditions.
		5. Check for bed poisoning	5. Yearly.

[a] As an alternative to the monitoring requirements specified in this table, the owner or operator may use a CEM meeting the requirements of Performance Specifications 8 or 9 of appendix B of part 60 to monitor TOC every 15 minutes.

[b] Monitor may be installed in the firebox or in the ductwork immediately downstream of the firebox before any substantial heat exchange is encountered.

TABLE 1 TO SUBPART MMM OF PART 63—GENERAL PROVISIONS APPLICABILITY TO SUBPART MMM—Continued

Reference to subpart A	Applies to subpart MMM	Explanation
§ 63.8(a)(3)	N/A	Reserved.
§ 63.8(a)(4)	Yes	
§ 63.8(b)(1)	Yes	
§ 63.8(b)(2)	No	§ 63.1366 specifies CMS requirements.
§ 63.8(b)(3)–(c)(3)	Yes	Except the submittal date of the immediate startup, shutdown, and malfunction reports for CMS events shall be 2 days as in § 63.6(e)(3)(iv).
§ 63.8(c)(4)	No	§ 63.1366 specifies monitoring frequencies.
§ 63.8(c)(5)–(8)	No	
§ 63.8(d)–(f)(3)	Yes	
§ 63.8(f)(4)	Yes	Except § 63.1368(b) specifies that requests may also be included in the Precompliance report.
§ 63.8(f)(5)	Yes	
§ 63.8(f)(6)	No	Subpart MMM does not require CEM's.
§ 63.8(g)	No	§ 63.1366 specifies data reduction procedures.
§ 63.9(a)–(d)	Yes	
§ 63.9(e)	No	
§ 63.9(f)	No	Subpart MMM does not contain opacity and visible emission standards.
§ 63.9(g)	No	
§ 63.9(h)(1)	Yes	
§ 63.9(h)(2)(i)	Yes	Except § 63.1368(a)(1) specifies additional information to include in the Notification of Compliance Status report.
§ 63.9(h)(2)(ii)	No	§ 63.1368 specifies the Notification of Compliance Status report is to be submitted within 150 days after the compliance date.
§ 63.9(h)(3)	Yes	
§ 63.9(h)(4)	N/A	Reserved.
§ 63.9(h)(5)–(6)	Yes	
§ 63.9(i)–(j)	Yes	Except § 63.9(j) does not apply for changes in information in the notification of compliance status report on equipment leaks as specified in § 63.1363(h)(2).
§ 63.10(a)–(b)(1)	Yes	
§ 63.10(b)(2)	No	§ 63.1367 specifies recordkeeping requirements.
§ 63.10(b)(3)	Yes	
§ 63.10(c)	Yes	
§ 63.10(d)(1)	Yes	
§ 63.10(d)(2)	Yes	
§ 63.10(d)(3)	No	Subpart MMM does not include opacity and visible emission standards.
§ 63.10(d)(4)	Yes	
§ 63.10(d)(5)	Yes	Except that actions and reporting for batch processes do not apply during startup and shutdown.
§ 63.10(e)(1)–(2)(i)	Yes	
§ 63.10(e)(2)(ii)	No	Subpart MMM does not include opacity monitoring requirements.
§ 63.10(e)(3)	Yes	
§ 63.10(e)(4)	No	Subpart MMM does not include opacity monitoring requirements.
§ 63.10(f)	Yes	
§ 63.11–§ 63.15	Yes.	

TABLE 2 TO SUBPART MMM OF PART 63—STANDARDS FOR NEW AND EXISTING PAI SOURCES

Emission source	Applicability	Requirement
Process vents	Existing:	
	Processes having uncontrolled organic HAP emissions ≥0.15 Mg/yr.	90% for organic HAP per process or to outlet concentration of ≤20 ppmv TOC.
	Processes having uncontrolled HCl and chlorine emissions ≥6.8 Mg/yr.	94% for HCl and chlorine per process or to outlet HCl and chlorine concentration of ≤20 ppmv.
	Individual process vents meeting flow and mass emissions criteria that have gaseous organic HAP emissions controlled to less than 90% on or after November 10, 1997.	98% gaseous organic HAP control per vent or ≤20 ppmv TOC outlet limit.
	New:	
	Processes having uncontrolled organic HAP emissions ≥0.15 Mg/yr.	98% for organic HAP per process or ≤20 ppmv TOC.
	Processes having uncontrolled HCl and chlorine emissions ≥6.8 Mg/yr and <191 Mg/yr.	94% for HCl and chlorine per process or to outlet concentration of ≤20 ppmv HCl and chlorine.
	Processes having uncontrolled HCl and chlorine emissions ≥191 Mg/yr.	99% for HCl and chlorine per process or to outlet concentration of ≤20 ppmv HCl and chlorine.
Storage vessels	Existing: ≥75 m^3 capacity and vapor pressure ≥3.45 kPa	Install a floating roof, reduce HAP by 95% per vessel, or to outlet concentration of ≤20 ppmv TOC.
	New: ≥38 m^3 capacity and vapor pressure ≥16.5 kPa	Same as for existing sources.
	≥75 m^3 capacity and vapor pressure ≥3.45 kPa	Same as for existing sources.

TABLE 1 TO SUBPART MMM OF PART 63—GENERAL PROVISIONS APPLICABILITY TO SUBPART MMM—Continued

Reference to subpart A	Applies to subpart MMM	Explanation
§63.1(b)(1)	No	§63.1360 specifies applicability.
§63.1(b)(2)–(3)	Yes	
§63.1(c)(1)	Yes	Subpart MMM (this table) specifies the applicability of each paragraph in subpart A to sources subject to subpart MMM.
§63.1(c)(2)	No	Area sources are not subject to subpart MMM.
§63.1(c)(3)	N/A	Reserved.
§63.1(c)(4)–(5)	Yes	
§63.1(d)	N/A	Reserved.
§63.1(e)	Yes	
§63.2	Yes	Additional terms are defined in §63.1361; when overlap between subparts A and MMM occurs, subpart MMM takes precedence.
§63.3	Yes	Other units used in subpart MMM are defined in that subpart.
§63.4(a)(1)–(3)	Yes	
§63.4(a)(4)	N/A	Reserved.
§63.4(a)(5)–(c)	Yes	
§63.5(a)	Yes	Except the term "affected source" shall apply instead of the terms "source" and "stationary source" in §63.5(a)(1) of subpart A.
§63.5(b)(1)	Yes	
§63.5(b)(2)	N/A	Reserved.
§63.5(b)(3)–(5)	Yes	
§63.5(b)(6)	No	§63.1360(g) specifies requirements for determining applicability of added PAI equipment.
§63.5(c)	N/A	Reserved.
§63.5(d)–(e)	Yes	
§63.5(f)(1)	Yes	Except "affected source" shall apply instead of "source" in §63.5(f)(1) of subpart A.
§63.5(f)(2)	Yes	
§63.6(a)	Yes	
§63.6(b)(1)–(2)	No	§63.1364 specifies compliance dates.
§63.6(b)(3)–(4)	Yes	
§63.6(b)(5)	Yes.	
§63.6(b)(6)	N/A	Reserved.
§63.6(b)(7)	Yes	
§63.6(c)(1)–(2)	Yes	Except "affected source" shall apply instead of "source" in §63.6(c)(1)–(2) of subpart A.
§63.6(c)(3)–(4)	N/A	Reserved.
§63.6(c)(5)	Yes	
§63.6(d)	N/A	Reserved.
§63.6(e)	Yes	Except §63.1360 specifies that the standards in subpart MMM apply during startup and shutdown for batch processes; therefore, these activities would not be covered in the startup, shutdown, and malfunction Plan.
§63.6(f)	Yes	Except §63.1360 specifies that the standards in subpart MMM also apply during startup and shutdown for batch processes.
§63.6(g)	Yes	An alternative standard has been proposed; however, affected sources will have the opportunity to demonstrate other alternatives to the Administrator.
§63.6(h)	No	Subpart MMM does not contain any opacity or visible emissions standards.
§63.6(i)(1)	Yes	
§63.6(i)(2)	Yes	Except "affected source" shall apply instead of "source" in §63.6(i)(2)(i) and (ii) of subpart A.
§63.6(i)(3)–(14)	Yes	
§63.6(i)(15)	N/A	Reserved.
§63.6(i)(16)	Yes	
§63.6(j)	Yes	
§63.7(a)(1)	Yes	
§63.7(a)(2)(i)–(vi)	Yes	§63.1368 specifies that test results must be submitted in the Notification of Compliance Status due 150 days after the compliance date.
§63.7(a)(2)(vii)–(viii)	N/A	Reserved.
§63.7(a)(2)(ix)–(c)	Yes	
§63.7(d)	Yes	Except "affected source" shall apply instead of "source" in §63.7(d) of subpart A.
§63.7(e)(1)	Yes	§63.1365 contains test methods specific to PAI sources.
§63.7(e)(2)	Yes	
§63.7(e)(3)	Yes	Except §63.1365 specifies less than 3 runs for certain tests.
§63.7(e)(4)	Yes.	
§63.7(f)	Yes	
§63.7(g)(1)	Yes	Except §63.1368(a) specifies that the results of the performance test be submitted with the Notification of Compliance Status report
§63.7(g)(2)	N/A	Reserved.
§63.7(g)(3)	Yes	
§63.7(h)	Yes	
§63.8(a)(1)–(2)	Yes	

submit a report quarterly. The report may be submitted as part of the next Periodic report required under paragraph (g) of this section. The report shall include:

(i) A brief description of the process change;

(ii) A description of any modifications to standard procedures or quality assurance procedures;

(iii) Revisions to any of the information reported in the original Notification of Compliance Status report under paragraph (f) of this section; and

(iv) Information required by the Notification of Compliance Status report under paragraph (f) of this section for changes involving the addition of processes or equipment.

(2) The owner or operator must submit a report 60 days before the scheduled implementation date of either of the following:

(i) Any change in the activity covered by the Precompliance report.

(ii) A change in the status of a control device from small to large.

(i) *Reports of startup, shutdown, and malfunction.* For the purposes of this subpart, the startup, shutdown, and malfunction reports shall be submitted on the same schedule as the Periodic reports required under paragraph (g) of this section instead of the schedule specified in § 63.10(d)(5)(i) of subpart A of this part. These reports shall include the information specified in § 63.1367(a)(3)(i) through (iii) and shall contain the name, title, and signature of the owner or operator or other responsible official who is certifying its accuracy. Reports are only required if a startup, shutdown, or malfunction occurred during the reporting period. Any time an owner or operator takes an action that is not consistent with the procedures specified in the affected source's startup, shutdown, and malfunction plan, the owner or operator shall submit an immediate startup, shutdown, and malfunction report as specified in § 63.10(d)(5)(ii) of subpart A of this part.

(j) *Reports of equipment leaks.* The owner or operator of an affected source subject to the standards in § 63.1363, shall implement the reporting requirements specified in § 63.1363(h). Copies of all reports shall be retained as records for a period of 5 years, in accordance with the requirements of § 63.10(b)(1) of subpart A of this part.

(k) *Reports of emissions averaging.* The owner or operator of an affected source that chooses to comply with the requirements of § 63.1362(h) shall submit all information as specified in § 63.1367(d) for all emission points included in the emissions average. The owner or operator shall also submit to the Administrator all information specified in paragraph (g) of this section for each emission point included in the emissions average.

(1) The reports shall also include the information listed in paragraphs (k)(1)(i) through (iv) of this section:

(i) Any changes to the processes, storage tanks, or waste management unit included in the average.

(ii) The calculation of the debits and credits for the reporting period.

(iii) Changes to the Emissions Averaging Plan which affect the calculation methodology of uncontrolled or controlled emissions or the hazard or risk equivalency determination.

(iv) Any changes to the parameters monitored according to § 63.1366(g).

(2) Every second semiannual or fourth quarterly report, as appropriate, shall include the results according to § 63.1367(d)(4) to demonstrate the emissions averaging provisions of § 63.1362(h), § 63.1365(h), § 63.1366(g), and § 63.1367(d) are satisfied.

(l) *Reports of heat exchange systems.* The owner or operator of an affected source subject to the requirements for heat exchange systems in § 63.1362(f) shall submit information about any delay of repairs as specified in § 63.104(f)(2) of subpart F of this part, except that when the phrase "periodic reports required by § 63.152(c) of subpart G of this part" is referred to in § 63.104(f)(2) of subpart F of this part, the periodic reports required in paragraph (g) of this section shall apply for the purposes of this subpart.

(m) *Notification of performance test and test Plan.* The owner or operator of an affected source shall notify the Administrator of the planned date of a performance test at least 60 days before the test in accordance with § 63.7(b) of subpart A of this part. The owner or operator also must submit the test Plan required by § 63.7(c) of subpart A of this part and the emission profile required by § 63.1365(b)(10)(ii) with the notification of the performance test.

(n) *Request for extension of compliance.* The owner or operator may submit to the Administrator a request for an extension of compliance in accordance with § 63.1364(a)(2).

(o) The owner or operator who submits an operating permit application before the date the Emissions Averaging Plan is due shall submit the information specified in paragraphs (o)(1) through (3) of this section with the operating permit application instead of the Emissions Averaging Plan.

(1) The information specified in § 63.1367(d) for emission points included in the emissions average;

(2) The information specified in § 63.9(h) of subpart A of this part, as applicable; and

(3) The information specified in paragraph (e) of this section, as applicable.

§ 63.1369 Delegation of authority.

(a) In delegating implementation and enforcement authority to a State under section 112(d) of the CAA, the authorities contained in paragraph (b) of this section shall be retained by the Administrator and not transferred to a State.

(b) The authority conferred in § 63.177 of subpart H of this part, the authority to approve applications for determination of equivalent means of emission limitation, and the authority to approve alternative test methods shall not be delegated to any State.

TABLE 1 TO SUBPART MMM OF PART 63—GENERAL PROVISIONS APPLICABILITY TO SUBPART MMM

Reference to subpart A	Applies to subpart MMM	Explanation
§ 63.1(a)(1)	Yes	Additional terms are defined in § 63.1361.
§ 63.1(a)(2)–(3)	Yes	
§ 63.1(a)(4)	Yes	Subpart MMM (this table) specifies applicability of each paragraph in subpart A to subpart MMM.
§ 63.1(a)(5)	N/A	Reserved.
§ 63.1(a)(6)–(7)	Yes	
§ 63.1(a)(8)	No	Discusses State programs.
§ 63.1(a)(9)	N/A	Reserved.
§ 63.1(a)(10)–(14)	Yes	

§ 63.1366(b)(1)(i) are operating as designed.

(3) Data and rationale used to support the parametric monitoring level(s) that are set according to § 63.1366(b)(3)(ii)(B).

(4) For owners and operators complying with the requirements of § 63.1362(i), the pollution prevention demonstration summary required in § 63.1365(g)(3).

(5) Data and rationale used to support an engineering assessment to calculate uncontrolled emissions from process vents as required in § 63.1365(c)(2)(ii).

(6) For fabric filters that are monitored with bag leak detectors, an operation and maintenance plan that describes proper operation and maintenance procedures, and a corrective action plan that describes corrective actions to be taken, and the timing of those actions, when the particulate matter concentration exceeds the setpoint and activates the alarm.

(f) *Notification of compliance status report.* The Notification of Compliance Status report required under § 63.9(h) shall be submitted no later than 150 calendar days after the compliance date and shall include the information specified in paragraphs (f)(1) through (7) of this section.

(1) The results of any applicability determinations, emission calculations, or analyses used to identify and quantify HAP emissions from the affected source.

(2) The results of emissions profiles, performance tests, engineering analyses, design evaluations, or calculations used to demonstrate compliance. For performance tests, results should include descriptions of sampling and analysis procedures and quality assurance procedures.

(3) Descriptions of monitoring devices, monitoring frequencies, and the values of monitored parameters established during the initial compliance determinations, including data and calculations to support the levels established.

(4) Operating scenarios.

(5) Descriptions of absolute or hypothetical peak-case operating and/or testing conditions for control devices.

(6) Identification of emission points subject to overlapping requirements described in § 63.1360(h) and the authority under which the owner or operator will comply, and identification of emission sources discharging to devices described by § 63.1362(l).

(7) Anticipated periods of planned routine maintenance during which the owner or operator would not be in compliance with the provisions in § 63.1362(c)(1) through (4).

(8) Percentage of total production from a PAI process unit that is anticipated to be produced for use as a PAI in the 3 years after either June 23, 1999 or startup, whichever is later.

(g) *Periodic reports.* The owner or operator shall prepare Periodic reports in accordance with paragraphs (g)(1) and (2) of this section and submit them to the Administrator.

(1) *Submittal schedule.* Except as provided in paragraphs (g)(1)(i) and (ii) of this section, the owner or operator shall submit Periodic reports semiannually, beginning 60 operating days after the end of the applicable reporting period. The first report shall be submitted no later than 240 days after the date the Notification of Compliance Status report is due and shall cover the 6-month period beginning on the date the Notification of Compliance Status report is due.

(i) The Administrator may determine on a case-by-case basis that more frequent reporting is necessary to accurately assess the compliance status of the affected source.

(ii) Quarterly reports shall be submitted when the monitoring data are used to comply with the alternative standards in § 63.1362(b)(6) or (c)(4) and the source experiences excess emissions. Once an affected source reports excess emissions, the affected source shall follow a quarterly reporting format until a request to reduce reporting frequency is approved. If an owner or operator submits a request to reduce the frequency of reporting, the provisions in § 63.10(e)(3) (ii) and (iii) of subpart A of this part shall apply, except that the term "excess emissions and continuous monitoring system performance report and/or summary report" shall mean "Periodic report" for the purposes of this section.

(2) *Content of periodic report.* The owner or operator shall include the information in paragraphs (g)(2)(i) through (vi) of this section, as applicable.

(i) Each Periodic report must include the information in § 63.10(e)(3)(vi)(A) through (M) of subpart A of this part, as applicable.

(ii) If the total duration of excess emissions, parameter exceedances, or excursions for the reporting period is 1 percent or greater of the total operating time for the reporting period, or the total continuous monitoring system downtime for the reporting period is 5 percent or greater of the total operating time for the reporting period, the Periodic report must include the information in paragraphs (g)(2)(ii)(A) through (D) of this section.

(A) Monitoring data, including 15-minute monitoring values as well as daily average values of monitored parameters, for all operating days when the average values were outside the ranges established in the Notification of Compliance Status report or operating permit.

(B) Duration of excursions, as defined in § 63.1366(b)(7).

(C) Operating logs and operating scenarios for all operating days when the values are outside the levels established in the Notification of Compliance Status report or operating permit.

(D) When a continuous monitoring system is used, the information required in § 63.10(c)(5) through (13) of subpart A of this part.

(iii) For each vapor collection system or closed vent system with a bypass line subject to § 63.1362(j)(1), records required under § 63.1366(f) of all periods when the vent stream is diverted from the control device through a bypass line. For each vapor collection system or closed vent system with a bypass line subject to § 63.1362(j)(2), records required under § 63.1366(f) of all periods in which the seal mechanism is broken, the bypass valve position has changed, or the key to unlock the bypass line valve was checked out.

(iv) The information in paragraphs (g)(2)(iv)(A) through (D) of this section shall be stated in the Periodic report, when applicable.

(A) No excess emissions.

(B) No exceedances of a parameter.

(C) No excursions.

(D) No continuous monitoring system has been inoperative, out of control, repaired, or adjusted.

(v) For each storage vessel subject to control requirements:

(A) Actual periods of planned routine maintenance during the reporting period in which the control device does not meet the specifications of § 63.1362(c)(5); and

(B) Anticipated periods of planned routine maintenance for the next reporting period.

(vi) For each PAI process unit that does not meet the definition of primary use, the percentage of the production in the reporting period produced for use as a PAI.

(viii) Updates to the corrective action plan.

(h) *Notification of process change.* (1) Except as specified in paragraph (h)(2) of this section, whenever a process change is made, or any of the information submitted in the Notification of Compliance Status report changes, the owner or operator shall

(i) The identification of all emission points in each emissions average.

(ii) The values of all parameters needed for input to the emission debits and credits equations in § 63.1365(h).

(iii) The calculations used to obtain the debits and credits.

(iv) The estimated values for all parameters required to be monitored under § 63.1366(g) for each emission point included in an average. These parameter values, or as appropriate, limited ranges for parameter values, shall be specified as enforceable operating conditions for the operation of the process, storage vessel, or waste management unit, as appropriate. Changes to the parameters must be reported as required by § 63.1368(k).

(v) A statement that the compliance demonstration, monitoring, inspection, recordkeeping and reporting provisions in § 63.1365(h), § 63.1366(g), and § 63.1368(k) that are applicable to each emission point in the emissions average will be implemented beginning on the date of compliance.

(2) The Emissions Averaging Plan shall demonstrate that the emissions from the emission points proposed to be included in the average will not result in greater hazard or, at the option of the operating permit authority, greater risk to human health or the environment than if the emission points were controlled according to the provisions in § 63.1362(b) through (d).

(i) This demonstration of hazard or risk equivalency shall be made to the satisfaction of the operating permit authority.

(A) The Administrator may require an owner or operator to use specific methodologies and procedures for making a hazard or risk determination.

(B) The demonstration and approval of hazard or risk equivalency shall be made according to any guidance that the Administrator makes available for use or any other technically sound information or methods.

(ii) An Emissions Averaging Plan that does not demonstrate hazard or risk equivalency to the satisfaction of the Administrator shall not be approved. The Administrator may require such adjustments to the Emissions Averaging Plan as are necessary in order to ensure that the average will not result in greater hazard or risk to human health or the environment than would result if the emission points were controlled according to § 63.1362(b) through (d).

(iii) A hazard or risk equivalency demonstration must satisfy the requirements specified in paragraphs (d)(2)(iii) (A) through (C) of this section.

(A) Be a quantitative, comparative chemical hazard or risk assessment;

(B) Account for differences between averaging and nonaveraging options in chemical hazard or risk to human health or the environment; and

(C) Meet any requirements set by the Administrator for such demonstrations.

(3) Records as specified in paragraphs (a) and (b) of this section.

(4) A calculation of the debits and credits as specified in § 63.1365(h) for the last quarter and the prior four quarters.

(e) The owner or operator of an affected source subject to the requirements for heat exchanger systems in § 63.1362(g) shall retain the records as specified in § 63.104(f)(1)(i) through (iv) of subpart G of this part.

(f) For each vapor collection system or closed-vent system that contains bypass lines that could divert a vent stream away from the control device and to the atmosphere, the owner or operator shall keep a record of the information specified in either paragraph (f) (1) or (2) of this section.

(1) Hourly records of whether the flow indicator specified under § 63.1362(j)(1) was operating and whether a diversion was detected at any time during the hour, as well as records of the times and durations of all periods when the vent stream is diverted from the control device or the flow indicator is not operating.

(2) Where a seal mechanism is used to comply with § 63.1362(j)(2), hourly records of flow are not required. In such cases, the owner or operator shall record that the monthly visual inspection of the seals or closure mechanism has been done, and shall record the occurrence of all periods when the seal mechanism is broken, the bypass line valve position has changed, or the key for a lock-and-key type lock has been checked out, and records of any car-seal that has broken.

(g) *Records of primary use.* For a PAI process unit that is used to produce a given material for use as a PAI as well as for other purposes, the owner or operator shall keep records of the total production and the production for use as a PAI on a semiannual or more frequent basis if the use as a PAI is not the primary use.

§ 63.1368 Reporting requirements.

(a) The owner or operator of an affected source shall comply with the reporting requirements of paragraphs (b) through (l) of this section. The owner or operator shall also comply with applicable paragraphs of §§ 63.9 and 63.10 of subpart A of this part, as specified in Table 1 of this subpart.

(b) *Initial notification.* The owner or operator shall submit the applicable initial notification in accordance with § 63.9(b) or (d) of subpart A of this part.

(c) *Application for approval of construction or reconstruction.* The owner or operator who is subject to § 63.5(b)(3) of subpart A of this part shall submit to the Administrator an application for approval of the construction of a new major source, the reconstruction of a major affected source, or the reconstruction of a major affected source subject to the standards. The application shall be prepared in accordance with § 63.5(d) of subpart A of this part.

(d) *Notification of continuous monitoring system performance evaluation.* An owner or operator who is required by the Administrator to conduct a performance evaluation for a continuous monitoring system that is used to comply with the alternative standard in § 63.1362(b)(6) or (c)(4) shall notify the Administrator of the date of the performance evaluation as specified in § 63.8(e)(2) of subpart A of this part.

(e) *Precompliance plan.* The Precompliance plan shall be submitted at least 6 months prior to the compliance date of the standard. For new sources, the Precompliance plan shall be submitted to the Administrator with the application for approval of construction or reconstruction. The Administrator shall have 90 days to approve or disapprove the Precompliance plan. The Precompliance plan shall be considered approved if the Administrator either approves it in writing, or fails to disapprove it in writing within the 90-day time period. The 90-day period shall begin when the Administrator receives the Precompliance plan. If the Precompliance plan is disapproved, the owner or operator must still be in compliance with the standard by the compliance date. To change any of the information submitted in the Precompliance plan, the owner or operator shall notify the Administrator at least 90 days before the planned change is to be implemented; the change shall be considered approved if the Administrator either approves the change in writing, or fails to disapprove the change in writing within 90 days of receipt of the change. The Precompliance plan shall include the information specified in paragraphs (e)(1) through (5) of this section.

(1) Requests for approval to use alternative monitoring parameters or requests to set monitoring parameters according to § 63.1366(b)(4).

(2) Descriptions of the daily or per batch demonstrations to verify that control devices subject to

average calculated every 30 days). A process with both batch and continuous operations is considered a continuous process for the purposes of this section.

(iii) For batch processes, the annual factors shall be calculated every 10 batches for the 12-month period preceding the 10th batch (annual rolling average calculated every 10 batches). Additional annual factors shall be calculated every 12 months during the period before the 10th batch if more than 12 months elapse before the 10th batch is produced.

(2) *Violations.* Each rolling average that exceeds the target value established in § 63.1365(g)(3) is considered a violation of the emission limit.

(g) *Monitoring for emissions averaging.* The owner or operator of an affected source that chooses to comply with the requirements of § 63.1362(h) shall meet all monitoring requirements specified in paragraph (b) of this section, as applicable, for all processes, storage tanks, and waste management units included in the emissions average.

§ 63.1367 Recordkeeping requirements.

(a) *Requirements of subpart A of this part.* The owner or operator of an affected source shall comply with the recordkeeping requirements in subpart A of this part as specified in Table 1 of this subpart and in paragraphs (a)(1) through (5) of this section.

(1) *Data retention.* Each owner or operator of an affected source shall keep copies of all records and reports required by this subpart for at least 5 years, as specified in § 63.10(b)(1) of subpart A of this part.

(2) *Records of applicability determinations.* The owner or operator of a stationary source that is not subject to this subpart shall keep a record of the applicability determination, as specified in § 63.10(b)(3) of subpart A of this part.

(3) *Startup, shutdown, and malfunction plan.* The owner or operator of an affected source shall develop and implement a written startup, shutdown, and malfunction plan as specified in § 63.6(e)(3) of subpart A of this part. This plan shall describe, in detail, procedures for operating and maintaining the affected source during periods of startup, shutdown, and malfunction and a program for corrective action for a malfunctioning process, air pollution control, and monitoring equipment used to comply with this subpart. The owner or operator of an affected source shall keep the current and superseded versions of this plan onsite, as specified in § 63.6(e)(3)(v) of subpart A of this part. The owner or operator shall keep the startup, shutdown, and malfunction records specified in paragraphs (b)(3)(i) through (iii) of this section. Reports related to the plan shall be submitted as specified in § 63.1368(i).

(i) The owner or operator shall record the occurrence and duration of each malfunction of air pollution control equipment used to comply with this subpart, as specified in § 63.6(e)(3)(iii) of subpart A of this part.

(ii) The owner or operator shall record the occurrence and duration of each malfunction of continuous monitoring systems used to comply with this subpart.

(iii) For each startup, shutdown, or malfunction, the owner or operator shall record all information necessary to demonstrate that the procedures specified in the affected source's startup, shutdown, and malfunction plan were followed, as specified in § 63.6(e)(3)(iii) of subpart A of this part; alternatively, the owner or operator shall record any actions taken that are not consistent with the plan, as specified in § 63.6(e)(3)(iv) of subpart A of this part.

(4) *Recordkeeping requirements for sources with continuous monitoring systems.* The owner or operator of an affected source who installs a continuous monitoring system to comply with the alternative standards in § 63.1362(b)(6) or (c)(4) shall maintain records specified in § 63.10(c)(1) through (14) of subpart A of this part.

(5) *Application for approval of construction or reconstruction.* For new affected sources, each owner or operator shall comply with the provisions regarding construction and reconstruction in § 63.5 of subpart A of this part.

(b) *Records of equipment operation.* The owner or operator must keep the following records up-to-date and readily accessible:

(1) Each measurement of a control device operating parameter monitored in accordance with § 63.1366 and each measurement of a treatment process parameter monitored in accordance with the provisions of § 63.1362(d).

(2) For processes subject to § 63.1362(g), records of consumption, production, and the rolling average values of the HAP and VOC factors.

(3) For each continuous monitoring system used to comply with the alternative standards in § 63.1362(b)(6) and (c)(4), records documenting the completion of calibration checks and maintenance of the continuous monitoring systems.

(4) For processes in compliance with the 0.15 Mg/yr emission limit of § 63.1362(b)(2)(i) or (b)(4)(i), records of the rolling annual calculations of uncontrolled emissions.

(5) For each bag leak detector used to monitor particulate HAP emissions from a fabric filter, the owner or operator shall maintain records of any bag leak detection alarm, including the date and time, with a brief explanation of the cause of the alarm and the corrective action taken.

(6) The owner or operator of an affected source that complies with the standards for process vents, storage tanks, and wastewater systems shall maintain up-to-date, readily accessible records of the information specified in paragraphs (b)(6)(i) through (vii) of this section to document that HAP emissions or HAP loadings (for wastewater) are below the limits specified in § 63.1362:

(i) The initial calculations of uncontrolled and controlled emissions of gaseous organic HAP and HCl per batch for each process.

(ii) The wastewater concentrations and flow rates per POD and process.

(iii) The number of batches per year for each batch process.

(iv) The operating hours per year for continuous processes.

(v) The number of batches and the number of operating hours for processes that contain both batch and continuous operations.

(vi) The number of tank turnovers per year, if used in an emissions average or for determining applicability of a new PAI process unit.

(vii) A description of absolute or hypothetical peak-case operating conditions as determined using the procedures in § 63.1365(b)(11).

(viii) Periods of planned routine maintenance as described in § 63.1362(c)(5).

(7) Daily schedule or log of each operating scenario prior to its operation.

(c) *Records of equipment leak detection and repair.* The owner or operator of an affected source subject to the equipment leak standards in § 63.1363 shall implement the recordkeeping requirements specified in § 63.1363(g). All records shall be retained for a period of 5 years, in accordance with the requirements of § 63.10(b)(1) of subpart A of this part.

(d) *Records of emissions averaging.* The owner or operator of an affected source that chooses to comply with the requirements of § 63.1362(h) shall maintain up-to-date records of the following information:

(1) An Emissions Averaging Plan which shall include in the plan, for all emission points included in each of the emissions averages, the information listed in paragraphs (d)(1)(i) through (v) of this section.

procedures specified in § 63.8(f) of subpart A of this part or in the Precompliance report (as specified in § 63.1368(e)).

(5) *Monitoring for the alternative standards.* For control devices that are used to comply with the provisions of § 63.1362(b)(6) and (c)(4), the owner or operator shall monitor and record the outlet TOC concentration and the outlet total HCl and chlorine concentration at least once every 15 minutes during the period in which the device is controlling HAP from emission streams subject to the standards in § 63.1362. A TOC monitor meeting the requirements of Performance Specification 8 or 9 of appendix B of 40 CFR part 60 shall be installed, calibrated, and maintained, according to § 63.8 of subpart A of this part. The owner or operator need not monitor the total HCl and chlorine concentration if the owner or operator determines that the emission stream does not contain HCl or chlorine. The owner or operator need not monitor for TOC concentration if the owner or operator determines that the emission stream does not contain organic compounds. If supplemental gases are introduced before the control device, the monitored concentration shall be corrected as specified in § 63.1365(a)(7).

(6) *Exceedances of operating parameters.* An exceedance of an operating parameter is defined as one of the following:

(i) If the parameter level, averaged over the operating day or block, is below a minimum value established during the initial compliance demonstration.

(ii) If the parameter level, averaged over the operating day or block, is above the maximum value established during the initial compliance demonstration.

(iii) A loss of all pilot flames for a flare during an operating day or block. Multiple losses of all pilot flames during an operating day constitutes one exceedance.

(iv) Each operating day or block for which the time interval between replacement of a nonregenerative carbon adsorber exceeds the interval established in paragraph (b)(1)(v) of this section.

(v) Each instance in which procedures to initiate the response to a bag leak detector alarm within 1 hour of the alarm as specified in the corrective action plan.

(7) *Excursions.* Excursions are defined by either of the two cases listed in paragraph (b)(7)(i) or (ii) of this section. An excursion also occurs if the periodic verification for a small control device is not conducted as specified in paragraph (b)(1)(i) of this section.

(i) When the period of control device operation is 4 hours or greater in an operating day or block and monitoring data are insufficient to constitute a valid hour of data, as defined in paragraph (b)(7)(iii) of this section, for at least 75 percent of the operating hours.

(ii) When the period of control device operation is less than 4 hours in an operating day or block and more than 1 of the hours during the period of operation does not constitute a valid hour of data due to insufficient monitoring data.

(iii) Monitoring data are insufficient to constitute a valid hour of data, as used in paragraphs (b)(7)(i) and (ii) of this section, if measured values are unavailable for any of the required 15-minute periods within the hour.

(8) *Violations.* Exceedances of parameters monitored according to the provisions of paragraphs (b)(1)(ii) and (b)(1) (iv) through (ix) of this section or excursions as defined by paragraphs (b)(7) (i) and (ii) of this section constitute violations of the operating limit according to paragraphs (b)(8) (i), (ii), and (iv) of this section. Exceedances of the temperature limit monitored according to the provisions of paragraph (b)(1)(iii) of this section or exceedances of the outlet concentrations monitored according to the provisions of paragraph (b)(1)(x) of this section constitute violations of the emission limit according to paragraphs (b)(8) (i), (ii), and (iv) of this section. Exceedances of the outlet concentrations monitored according to the provisions of paragraph (b)(5) of this section constitute violations of the emission limit according to the provisions of paragraphs (b)(8) (iii) and (iv) of this section.

(i) Except as provided in paragraph (b)(8)(iv) of this section, for episodes occurring more than once per day, exceedances of established parameter limits or excursions will result in no more than one violation per operating day for each monitored item of equipment utilized in the process.

(ii) Except as provided in paragraph (b)(8)(iv) of this section, for control devices used for more than one process in the course of an operating day, exceedances or excursions will result in no more than one violation per operating day, per control device, for each process for which the control device is in service.

(iii) Except as provided in paragraph (b)(8)(iv) of this section, exceedances of the 20 ppmv TOC outlet emission limit, averaged over the operating day, will result in no more than one violation per day per control device. Except as provided in paragraph (b)(8)(iv) of this section, exceedances of the 20 ppmv HCl and chlorine outlet emission limit, averaged over the operating day, will result in no more than one violation per day per control device.

(iv) Periods of time when monitoring measurements exceed the parameter values as well as periods of inadequate monitoring data do not constitute a violation if they occur during a startup, shutdown, or malfunction, and the facility follows its startup, shutdown, and malfunction plan.

(c) *Monitoring for uncontrolled emission rates.* The owner or operator shall demonstrate continuous compliance with the emission limit in § 63.1362 (b)(2)(i) or (b)(4)(i) by calculating daily a 365-day rolling summation of uncontrolled emissions based on the uncontrolled emissions per emission episode, as calculated using the procedures in § 63.1365(c)(2), and records of the number of batches produced. Each day that the summation for a process exceeds 0.15 Mg/yr is considered a violation of the emission limit.

(d) *Monitoring for equipment leaks.* The standard for equipment leaks is based on monitoring. All monitoring requirements for equipment leaks are specified in § 63.1363.

(e) *Monitoring for heat exchanger systems.* The standard for heat exchanger systems is based on monitoring. All monitoring requirements for heat exchanger systems are specified in § 63.1362(f).

(f) *Monitoring for the pollution prevention alternative standard.* The owner or operator of an affected source that chooses to comply with the requirements of § 63.1362(g) (2) or (3) shall calculate annual rolling average values of the HAP and VOC factors in accordance with the procedures specified in paragraph (f)(1) of this section. If complying with § 63.1362(g)(3), the owner or operator shall also comply with the monitoring requirements specified in paragraph (b) of this section for the applicable add-on air pollution control device.

(1) *Annual factors.* The annual HAP and VOC factors shall be calculated in accordance with the procedures specified in paragraphs (f)(1) (i) through (iii) of this section.

(i) The consumption of both total HAP and total VOC shall be divided by the production rate, per process, for 12-month periods at the frequency specified in either paragraph (f)(1) (ii) or (iii) of this section, as applicable.

(ii) For continuous processes, the annual factors shall be calculated every 30 days for the 12-month period preceding the 30th day (annual rolling

Specification 8 or 9 of appendix B of part 60 and must be installed, calibrated, and maintained, according to § 63.8 of subpart A of this part. As part of the QA/QC Plan, calibration of the device must include, at a minimum, quarterly cylinder gas audits. If supplemental gases are introduced before the control device, the monitored concentration shall be corrected as specified in § 63.1365(a)(7).

(xi) *Fabric filters.* For each fabric filter used to control particulate matter emissions from bag dumps and product dryers subject to § 63.1362(e), the owner or operator shall install, calibrate, maintain, and continuously operate a bag leak detection system that meets the requirements in paragraphs (b)(1)(xi)(A) through (G) of this section.

(A) The bag leak detection system sensor must provide output of relative particulate matter emissions.

(B) The bag leak detection system must be equipped with an alarm system that will sound when an increase in particulate matter emissions over a preset level is detected.

(C) For positive pressure fabric filters, a bag leak detector must be installed in each fabric filter compartment or cell. If a negative pressure or induced air filter is used, the bag leak detector must be installed downstream of the fabric filter. Where multiple bag leak detectors are required (for either type of fabric filter), the system instrumentation and alarm may be shared among detectors.

(D) The bag leak detection system shall be installed, operated, calibrated and maintained in a manner consistent with available guidance from the U.S. Environmental Protection Agency or, in the absence of such guidance, the manufacturer's written specifications and instructions.

(E) Calibration of the system shall, at a minimum, consist of establishing the relative baseline output level by adjusting the range and the averaging period of the device and establishing the alarm set points and the alarm delay time.

(F) Following initial adjustment, the owner or operator shall not adjust the sensitivity or range, averaging period, alarm set points, or alarm delay time, except as established in an operation and maintenance plan that is to be submitted with the Precompliance plan. In no event shall the sensitivity be increased more than 100 percent or decreased by more than 50 percent over a 365-day period unless such adjustment follows a complete baghouse inspection which demonstrates the baghouse is in good operating condition.

(G) If the alarm on a bag leak detection system is triggered, the owner or operator shall, within 1 hour of an alarm, initiate the procedures to identify the cause of the alarm and take corrective action as specified in the corrective action plan.

(xii) For each waste management unit, treatment process, or control device used to comply with § 63.1362(d), the owner or operator shall comply with the procedures specified in § 63.143 of subpart G of this part, except that when the procedures to request approval to monitor alternative parameters according to the procedures in § 63.151(f) are referred to in § 63.143(d)(3), the procedures in paragraph (b)(4) of this section shall apply for the purposes of this subpart.

(xiii) *Closed-vent system visual inspections.* The owner or operator shall perform monthly visual inspections of each closed vent system as specified in § 63.1362(j).

(2) *Averaging periods.* Averaging periods for parametric monitoring levels shall be established according to paragraphs (b)(2)(i) through (iii) of this section.

(i) Except as provided in paragraph (b)(2)(iii) of this section, a daily (24-hour) or block average shall be calculated as the average of all values for a monitored parameter level set according to the procedures in (b)(3)(iii) of this section recorded during the operating day or block.

(ii) The operating day or block shall be defined in the Notification of Compliance Status report. The operating day may be from midnight to midnight or another continuous 24-hour period. The operating block may be used as an averaging period only for vents from batch operations, and is limited to a period of time that is, at a maximum, equal to the time from the beginning to end of a series of consecutive batch operations.

(iii) Monitoring values taken during periods in which the control devices are not controlling HAP from an emission stream subject to the standards in § 63.1362, as indicated by periods of no flow or periods when only streams that are not subject to the standards in § 63.1362 are controlled, shall not be considered in the averages. Where flow to the device could be intermittent, the owner or operator shall install, calibrate and operate a flow indicator at the inlet or outlet of the control device to identify periods of no flow.

(3) *Procedures for setting parameter levels for control devices used to control emissions from process vents.* (i) *Small control devices.* Except as provided in paragraph (b)(1)(i) of this section, for devices controlling less than 10 tons/yr of HAP for which a performance test is not required, the parameteric levels shall be set based on the design evaluation required in § 63.1365(c)(3)(i)(A). If a performance test is conducted, the monitoring parameter level shall be established according to the procedures in paragraph (b)(3)(ii) of this section.

(ii) *Large control devices.* For devices controlling greater than or equal to 10 tons/yr of HAP for which a performance test is required, the parameter level must be established as follows:

(A) If the operating parameter level to be established is a maximum or minimum, it must be based on the average of the average values from each of the three test runs.

(B) The owner or operator may establish the parametric monitoring level(s) based on the performance test supplemented by engineering assessments and/or manufacturer's recommendations. Performance testing is not required to be conducted over the entire range of expected parameter values. The rationale for the specific level for each parameter, including any data and calculations used to develop the level(s) and a description of why the level indicates proper operation of the control device shall be provided in the Precompliance plan. Determination of the parametric monitoring level using these procedures is subject to review and approval by the Administrator.

(iii) *Parameter levels for control devices controlling batch process vents.* For devices controlling batch process vents alone or in combination with other streams, the level(s) shall be established in accordance with paragraph (b)(3)(iii)(A) or (B) of this section.

(A) A single level for the batch process(es) shall be calculated from the initial compliance demonstration.

(B) The owner or operator may establish separate levels for each batch emission episode or combination of emission episodes selected to be controlled. If separate monitoring levels are established, the owner or operator must provide a record indicating at what point in the daily schedule or log of processes required to be recorded per the requirements of § 63.1367(b)(7), the parameter being monitored changes levels and must record at least one reading of the new parameter level, even if the duration of monitoring for the new parameter level is less than 15 minutes.

(4) *Requesting approval to monitor alternative parameters.* The owner or operator may request approval to monitor parameters other than those required by paragraphs (b)(1)(ii) through (xiii) of this section. The request shall be submitted according to the

be accurate to within ±10 percent of the design scrubber liquid flowrate.

(C) The monitoring device shall be calibrated annually.

(iii) *Condensers.* For each condenser, the owner or operator shall establish the maximum condenser outlet gas temperature as a site-specific operating parameter which must be measured and recorded at least once every 15 minutes during the period in which the condenser is controlling HAP from an emission stream as required by the standards in § 63.1362.

(A) The temperature monitoring device must be accurate to within ±2 percent of the temperature measured in degrees Celsius or ±2.5°C, whichever is greater.

(B) The temperature monitoring device must be calibrated annually.

(iv) *Regenerative carbon adsorbers.* For each regenerative carbon adsorber, the owner or operator shall comply with the provisions in paragraphs (b)(1)(iv)(A) through (F) of this section.

(A) Establish the regeneration cycle characteristics specified in paragraphs (b)(1)(iv)(A) (*1*) through (*4*) of this section under absolute or hypothetical peak-case conditions, as defined in § 63.1365(b)(11)(i) or (ii).

(*1*) Minimum regeneration frequency (i.e., operating time since last regeneration);

(*2*) Minimum temperature to which the bed is heated during regeneration;

(*3*) Maximum temperature to which the bed is cooled, measured within 15 minutes of completing the cooling phase; and

(*4*) Minimum regeneration stream flow.

(B) Monitor and record the regeneration cycle characteristics specified in paragraphs (b)(1)(iv)(B) (*1*) through (*4*) of this section for each regeneration cycle.

(*1*) Regeneration frequency (i.e., operating time since end of last regeneration);

(*2*) Temperature to which the bed is heated during regeneration;

(*3*) Temperature to which the bed is cooled, measured within 15 minutes of the completion of the cooling phase; and

(*4*) Regeneration stream flow.

(C) Use a temperature monitoring device that is accurate to within ±2 percent of the temperature measured in degrees Celsius or ±2.5°C, whichever is greater.

(D) Use a regeneration stream flow monitoring device capable of recording the total regeneration stream flow to within ±10 percent of the established value (i.e., accurate to within ±10 percent of the reading).

(E) Calibrate the temperature and flow monitoring devices annually.

(F) Conduct an annual check for bed poisoning in accordance with manufacturer's specifications.

(v) *Nonregenerative carbon adsorbers.* For each nonregenerative carbon adsorption system such as a carbon canister that does not regenerate the carbon bed directly onsite in the control device, the owner or operator shall replace the existing carbon bed in the control device with fresh carbon on a regular schedule based on one of the following procedures:

(A) Monitor the TOC concentration level in the exhaust vent stream from the carbon adsorption system on a regular schedule, and replace the existing carbon with fresh carbon immediately when carbon breakthrough is indicated. The monitoring frequency shall be daily or at an interval no greater than 20 percent of the time required to consume the total carbon working capacity under absolute or hypothetical peak-case conditions as defined in § 63.1365(b)(11)(i) or (ii), whichever is longer.

(B) Establish the maximum time interval between replacement, and replace the existing carbon before this time interval elapses. The time interval shall be established based on the conditions anticipated under absolute or hypothetical peak-case, as defined in § 63.1365(b)(11)(i) or (ii).

(vi) *Flares.* For each flare, the presence of the pilot flame shall be monitored at least once every 15 minutes during the period in which the flare is controlling HAP from an emission stream subject to the standards in § 63.1362. The monitoring device shall be calibrated annually.

(vii) *Thermal incinerators.* For each thermal incinerator, the owner or operator shall monitor the temperature of the gases exiting the combustion chamber as the site-specific operating parameter which must be measured and recorded at least once every 15 minutes during the period in which the combustion device is controlling HAP from an emission stream subject to the standards in § 63.1362.

(A) The temperature monitoring device must be accurate to within ±0.75 percent of the temperature measured in degrees Celsius or ±2.5°C, whichever is greater.

(B) The monitoring device must be calibrated annually.

(viii) *Catalytic incinerators.* For each catalytic incinerator, the parameter levels that the owner or operator shall establish are the minimum temperature of the gas stream immediately before the catalyst bed and the minimum temperature difference across the catalyst bed. The owner or operator shall monitor the temperature of the gas stream immediately before and after the catalyst bed, and calculate the temperature difference across the catalyst bed, at least once every 15 minutes during the period in which the catalytic incinerator is controlling HAP from an emission stream subject to the standards in § 63.1362.

(A) The temperature monitoring devices must be accurate to within ±0.75 percent of the temperature measured in degrees Celsius or ±2.5°C, whichever is greater.

(B) The temperature monitoring devices must be calibrated annually.

(ix) *Process heaters and boilers.* (A) Except as specified in paragraph (b)(1)(ix)(B) of this section, for each boiler or process heater, the owner or operator shall monitor the temperature of the gases exiting the combustion chamber as the site-specific operating parameter which must be monitored and recorded at least every 15 minutes during the period in which the boiler or process heater is controlling HAP from an emission stream subject to the standards in § 63.1362.

(*1*) The temperature monitoring device must be accurate to within ±0.75 percent of the temperature measured in degrees Celsius or ±2.5°C, whichever is greater.

(*2*) The temperature monitoring device must be calibrated annually.

(B) The owner or operator is exempt from the monitoring requirements specified in paragraph (b)(1)(ix)(A) of this section if either:

(*1*) All vent streams are introduced with primary fuel; or

(*2*) The design heat input capacity of the boiler or process heater is 44 megawatts or greater.

(x) *Continuous emission monitor.* As an alternative to the parameters specified in paragraphs (b)(1)(ii) through (ix) of this section, an owner or operator may monitor and record the outlet HAP concentration or both the outlet TOC concentration and outlet total HCl and chlorine concentration at least every 15 minutes during the period in which the control device is controlling HAP from an emission stream subject to the standards in § 63.1362. The owner or operator need not monitor the total HCl and chlorine concentration if the owner or operator determines that the emission stream does not contain HCl or chlorine. The owner or operator need not monitor the TOC concentration if the owner or operator determines the emission stream does not contain organic compounds. The HAP or TOC monitor must meet the requirements of Performance

$EWW1_{iC}$ = emissions from each Group 1 wastewater stream i if the standard had been applied to the uncontrolled emissions. $EWW1_{iC}$ is calculated according to the procedures in paragraph (h)(6)(v) of this section

$EWW1_{iA}$ = emissions from each Group 1 wastewater stream i that is controlled to a level more stringent that the applicable standard. $EWW1_{iA}$ is calculated according to the procedures in paragraph (h)(6)(v) of this section

$EWW2_{iB}$ = emissions from each Group 2 wastewater stream i at the baseline date. $EWW2_{iB}$ is calculated according to the procedures in paragraph (h)(6)(v) of this section

$EWW2_{iA}$ = actual emissions from each Group 2 wastewater stream i that is controlled. $EWW2_{iA}$ is calculated according to the procedures in paragraph (h)(6)(v) of this section

n = number of Group 1 emission points that are included in the emissions average. The value of n is not necessarily the same for process vents, storage tanks, and wastewater

m = number of Group 2 emission points included in the emissions average. The value of m is not necessarily the same for process vents, storage tanks, and wastewater

D = discount factor equal to 0.9 for all credit-generating emission points except those controlled by a pollution prevention measure, which will not be discounted

(ii) For an emission point controlled using a pollution prevention measure, the nominal efficiency for calculating credits shall be as determined as described in § 63.150(j) of subpart G of this part.

(iii) Emissions from process vents shall be calculated in accordance with the procedures specified in paragraphs (h)(6)(iii)(A) through (C) of this section.

(A) Uncontrolled emissions from Group 1 process vents shall be calculated according to the procedures in paragraph (h)(5)(ii)(A) or (C) of this section.

(B) Actual emissions from Group 1 process vents with a nominal efficiency greater than the applicable standard or a pollution prevention measure that achieves reductions greater than the applicable standard shall be calculated using Equation 42 of this subpart:

$$EPV1_{iA} = EPV1_{iU} \times \left[1 - N_{eff}/100\right] \qquad \text{(Eq. 42)}$$

Where:

$EPV1_{iA}$ = actual emissions from each Group 1 process i that is controlled to a level more stringent than the applicable standard

$EPV1_{iU}$ = uncontrolled emissions from each Group 1 process i

N_{eff} = nominal efficiency of control device or pollution prevention measure, percent

(C) Baseline and actual emissions from Group 2 process vents shall be calculated according to the procedures in § 63.150(h)(2)(iii) and (iv) with the following modifications:

(*1*) The term "90 percent reduction" shall apply instead of the term "98 percent reduction"; and

(*2*) When the phrase "paragraph (g)(2)" is referred to in § 63.150(h)(2)(iii) and (iv), the provisions in paragraph (h)(5)(ii) of this section shall apply for the purposes of this subpart.

(iv) Uncontrolled emissions from storage vessels shall be calculated according to the procedures described in paragraph (d)(1) of this section. Actual and baseline emissions from storage tanks shall be calculated according to the procedures specified in § 63.150(h)(3) of subpart G of this part, except when § 63.150(h)(3) refers to § 63.150(g)(3)(i), paragraph (d)(1) of this section shall apply for the purposes of this subpart.

(v) Emissions from wastewater shall be calculated using the procedures in § 63.150(h)(5) of subpart G of this part.

§ 63.1366 Monitoring and inspection requirements.

(a) To provide evidence of continued compliance with the standard, the owner or operator of any existing or new affected source shall install, operate, and maintain monitoring devices as specified in this section. During the initial compliance demonstration, maximum or minimum operating parameter levels, or other design and operating characteristics, as appropriate, shall be established for emission sources that will indicate the source is in compliance. Test data, calculations, or information from the evaluation of the control device design, as applicable, shall be used to establish the operating parameter level or characteristic.

(b) *Monitoring for control devices.* (1) *Parameters to monitor.* Except as specified in paragraph (b)(1)(i) of this section, for each control device, the owner or operator shall install and operate monitoring devices and operate within the established parameter levels to ensure continued compliance with the standard. Monitoring parameters are specified for control scenarios in paragraphs (b)(1)(ii) through (xii) of this section, and are summarized in Table 3 of this subpart.

(i) *Periodic verification.* For control devices that control vent streams containing total HAP emissions less than 0.91 Mg/yr, before control, monitoring shall consist of a periodic verification that the device is operating properly. This verification shall include, but not be limited to, a daily or more frequent demonstration that the unit is working as designed and may include the daily measurements of the parameters described in paragraphs (b)(1)(ii) through (xii) of this section. This demonstration shall be included in the Precompliance plan, to be submitted 6 months prior to the compliance date of the standard.

(ii) *Scrubbers.* For affected sources using liquid scrubbers, the owner or operator shall establish a minimum scrubber liquid flow rate or pressure drop as a site-specific operating parameter which must be measured and recorded at least once every 15 minutes during the period in which the scrubber is controlling HAP from an emission stream as required by the standards in § 63.1362. If the scrubber uses a caustic solution to remove acid emissions, the pH of the effluent scrubber liquid shall also be monitored once a day. The minimum scrubber liquid flow rate or pressure drop shall be based on the conditions under which the initial compliance demonstration was conducted.

(A) The monitoring device used to determine the pressure drop shall be certified by the manufacturer to be accurate to within a gage pressure of ±10 percent of the maximum pressure drop measured.

(B) The monitoring device used for measurement of scrubber liquid flowrate shall be certified by the manufacturer to

February 27, 2001. Sections 63.481 and 63.1311 provide specific compliance dates for all emission points.

As a result of litigation proceedings and changes necessary due to amendments to the Hazardous Organics NESHAP (HON), which were promulgated on January 17, 1997 (62 FR 6722), significant amendments to these NESHAP were proposed on March 9, 1999 (64 FR 11560). Those amendments were necessary due to the fact that both subparts U and JJJ reference a substantial number of the HON requirements, and those requirements changed significantly in the January 17, 1997, promulgated amendments.

We are currently summarizing and evaluating comments on the March 9, 1999, proposed amendments. As noted above, for existing affected sources subject to subparts U and JJJ, the compliance dates for all equipment, except components subject to the equipment leak provisions, are in September 1999 (September 5, 1999, for subpart U and September 12, 1999, for subpart JJJ). While we are uncertain of the exact date that we will promulgate these amendments, we expect that it will be after the compliance dates noted above. We believe that requiring existing affected sources to come into compliance with a regulation that is soon-to-be-amended, to a considerable degree, presents a significant and unnecessary burden for affected sources and enforcement agencies. We also believe that new affected sources, starting up on or after March 9, 1999, should be treated the same way that new sources are treated that start up after the proposal of a regulation (i.e., they must comply at promulgation or start-up, whichever is later). We also believe that requiring these new sources to begin to comply with the provisions of a soon-to-be-amended regulation would result in a significant and unnecessary burden.

We are publishing this direct final rule without prior proposal because we view these amendments to be noncontroversial, and we anticipate no adverse comments on these amendments. This direct final rule is of a relatively short time frame (likely well under 1 year), and it would avoid imposing the significant burden of requiring owners and operators to comply with one version of a rule for a period of months only to impose different compliance provisions at promulgation of the amendments. We are publishing this rule as a direct final rule because we believe that the "indefinite stay" of these compliance dates should become effective as soon as possible, to allow owners or operators that have started up, or that plan to start up, a new affected source this spring or summer to focus on compliance with the final amended versions of the regulations. However, in the "Proposed Rules" section of today's **Federal Register**, we are publishing a separate document that will serve as a *proposal* to stay the subparts U and JJJ compliance dates for existing affected sources and to establish new compliance dates for new affected sources with an initial start up date on or after March 9, 1999, if adverse comments are filed on this direct final rule. This rule will be effective on August 30, 1999 without further notice unless we receive adverse comment by July 30, 1999. If a significant adverse comment applies to an amendment, paragraph, or section of this rule and that provision may be addressed separately from the remainder of the rule, we may adopt as final those provisions of the rule that are not the subject of a significant adverse comment and withdraw those provisions that did receive adverse comment. For any provisions that are withdrawn, we will address all public comments in a subsequent final rule based on the proposed rule. We will not institute a second comment period on this action. Any parties interested in commenting must do so at this time.

We do not anticipate that the amendments proposed on March 9, 1999, will alter the type or identity of sources subject to the regulation. However, the amendments do affect how owners or operators of those sources must comply with the requirements in subpart U or JJJ.

Without today's stay of the compliance dates, owners or operators of existing affected sources subject to subpart U or JJJ would have to comply by this September (September 1999) with the regulations as they were promulgated in 1996. New affected sources starting up in spring or summer of 1999 would have to comply with the September 1996 promulgated requirements, upon initial start up. Soon thereafter, we will promulgate amendments to 40 CFR part 63, subparts U and JJJ, which will likely contain different compliance demonstration requirements. Examples of potential situations that could arise if we did not take action to stay the compliance dates for these regulations are provided below.

The regulations promulgated in 1996 specify that compliance tests be conducted at "maximum representative" operating conditions. The owner or operator, who is required to select the maximum representative conditions for a performance test based on the 1996 version of the regulation, would conduct the test shortly after the September 1999 compliance date. We did not propose to change this requirement in our March 9, 1999 action, but we did propose provisions that clarify what are maximum representative operating conditions. If the conditions originally selected by the owner or operator, based on the 1996 regulations, did not meet the amended definition, the owner or operator may be required to conduct another performance test.

The regulations promulgated in 1996 require an owner or operator to base the group determination for batch process vents on the "worst-case hazardous air pollutant (HAP) emitting product." For a Group 2 batch process vent, the regulations require that the owner or operator establish and comply with a "batch cycle limitation," to ensure that the Group 2 vent does not become Group 1. The proposed amendments change the basis for the group determination for batch process vents to the "highest-HAP recipe," and replace the batch cycle limitation with a "batch mass input limitation."

Without today's stay of the compliance dates, the following scenario could be encountered by owners and operators of batch process vents. Prior to the September 1999 compliance dates (existing affected sources) or initial start-up (new affected sources), an owner or operator would need to determine the group status for each batch process vent. This presumably means an owner or operator would need to "model" all formulations to see which formulation emits the most HAP, in order to make a group determination. However, that group determination will be irrelevant once we promulgate the amendments to subparts U and JJJ. Today's Direct Final Rule removes the burden that such a scenario would impose.

According to the September 1996 promulgated requirements for Group 2 batch process vents, the owner or operator needs to establish a batch cycle limitation and to begin tracking batch cycles. The owner or operator would also be required to record and report the group determination results and the batch cycle limitation.

Following promulgation of the proposed amendments, records of the "new" group determination (based on the highest-HAP recipe) would be required, a batch mass input limitation would need to be established, and tracking of the mass input to each unit operation would need to be conducted. Notwithstanding the owner or operator's

considerable prior efforts in establishing a group determination, the owner or operator would then be compelled to conduct and establish an entirely new group determination and to establish a batch mass input limitation.

The wastewater provisions provide another example of potential problems that should be resolved by today's Direct Final Rule. Subparts U and JJJ both directly reference the HON wastewater provisions, and provide a list of exceptions to the HON requirements. After the September 1996 promulgation of subparts U and JJJ, we proposed and promulgated significant amendments to the HON wastewater provisions. Therefore, some of the specific HON wastewater paragraphs which are cited in subparts U and JJJ have been moved, while some cited paragraphs no longer exist. Therefore, an owner or operator attempting to comply with the wastewater provisions in subpart U (§ 63.501) or subpart JJJ (§ 63.1330) as promulgated in September 1996 would be faced with this list of incorrect exceptions and citations. On March 9, 1999, we proposed to amend the wastewater exceptions and cross-references, in accordance with the promulgated HON amendments.

We do not believe that owners or operators of affected sources should be placed in situations like those described above. Further, you should not be compelled to comply with regulatory provisions that we have deemed to be defective and in need of revision. We also do not believe that it would be prudent for agencies enforcing this regulation to expend resources enforcing requirements that will be changing soon after the compliance date. Therefore, we believe that the most reasonable action is to stay the compliance dates indefinitely, until new compliance dates can be put forth in the promulgated amendments.

II. Who does this stay impact?

We are issuing a stay of the existing source compliance dates for the Group I (subpart U) and Group IV (subpart JJJ) Polymers and Resins NESHAP for all emission points, except for those components subject to the equipment leak provisions. Specifically, we are staying the provisions in 40 CFR 63.481(c) and (d)(6), and in 40 CFR 63.1311(c), by adding a note at the end of each of these paragraphs, explaining that these compliance dates are stayed indefinitely. In a similar manner, we are also staying the compliance dates for new affected sources with an initial start-up date on or after March 9, 1999, by adding a note at the end of 40 CFR 63.481(b) and 40 CFR 63.1311(b).

This stay will impact you if you are the owner or operator of an existing or new (on or after March 9, 1999) affected source subject to either the Group I or Group IV Polymers and Resins NESHAP. You will not be required to comply with the requirements for storage vessels, process vents, back-end process operations (subpart U only), heat exchange systems, or wastewater by September 5, 1999 or September 12, 1999, respectively. Also, you will not be required to comply with the associated monitoring, recordkeeping, or reporting provisions at that time. When the final amendments to the regulations are promulgated, we will publish the new compliance dates, providing you with a reasonable amount of time in which to comply with the amended regulations. We will use information submitted by commenters in response to our request for comments on this topic in the March 9, 1999, proposal of amendments (64 FR 11573) to determine what constitutes a "reasonable amount of time" before promulgating those amendments. We also plan to specify how and when any reports that are due prior to the compliance date (e.g., the Precompliance Report or the Emissions Averaging Plan) are to be submitted. This Direct Final Rule does not stay the compliance date in 40 CFR part 63, subpart JJJ for process contact cooling tower provisions at existing affected sources that produce PET using a continuous terephthalic acid high viscosity multiple end finisher process, because that compliance date was previously extended until February 27, 2001.

If you are the owner or operator of an existing source that is subject to either the Group I or Group IV Polymers and Resins NESHAP, you should already be in compliance with the equipment leak provisions associated with those NESHAP, unless you have received a compliance extension or are a producer of PET. This Direct Final Rule does not impact the compliance dates for those equipment leak provisions. You will need to continue to comply with those equipment leak provisions, along with all the associated monitoring, recordkeeping, and reporting requirements. For PET producers, the existing source compliance date for the equipment leak provisions is February 27, 2001.

At promulgation of the March 9, 1999 proposed amendments, we will also publish the compliance dates that apply to new affected sources subject to the Group I and Group IV Polymers and Resins NESHAP. We will amend §§ 63.481(b) and 63.1311(b) to specify the compliance date for new sources that have an initial start up date on or after March 9, 1999. The February 27, 2001, compliance date for the equipment leaks provisions for new affected sources producing PET will not be affected by the promulgation of the amendments to subparts U and JJJ.

Therefore, if you are the owner or operator of a new affected source that has an initial start-up date on or after March 9, 1999, but before the new compliance date which will be specified in the promulgated amendments, you will not be required to comply with any provisions of the rule upon initial start-up. Instead, you will be required to be in compliance with the requirements for new affected sources on the compliance date published in the promulgated amendments. If you will have an initial start-up date after the compliance date described in the promulgated amendments, then you will be required to comply with the requirements for new affected sources on the date of your initial start-up.

If you are the owner or operator of a new affected source that had an initial start up date prior to March 9, 1999, you should already be in compliance with all aspects of the applicable regulation (with the exception of owners or operators of PET sources, who are not yet required to be in compliance with the equipment leak provisions). This Direct Final Rule does not impact the provisions for new affected sources with an initial start-up prior to March 9, 1999. You will need to continue to comply with the September 1996 promulgated requirements, along with all the associated monitoring, recordkeeping, and reporting requirements. Further, you will need to come into compliance with the promulgated amendments on the compliance date published in the promulgated amendments for new affected sources.

III. What are the administrative requirements for this direct final rule?

A. Docket

The dockets are organized and complete files of all the information submitted to or otherwise considered by EPA in the development of the final standards. The principal purposes of the docket are to allow interested parties to readily identify and locate documents so that they can intelligently and effectively participate in the rulemaking process; and to serve as the record in case of judicial review (except for interagency review materials (section 307(d)(7)(A)).

B. Executive Order 12866

Under Executive Order 12866 (58 FR 51735, October 4, 1993), EPA must determine whether the regulatory action is "significant" and therefore subject to Office of Management and Budget (OMB) review and the requirements of the Executive Order. The Executive Order defines "significant regulatory action" as one that is likely to result in standards that may:

(1) Have an annual effect on the economy of $100 million or more or adversely affect, in a material way, the economy, a sector of the economy, productivity, competition, jobs, the environment, public health or safety, or State, local, or tribal governments or communities;

(2) Create a serious inconsistency or otherwise interfere with an action taken or planned by another agency;

(3) Materially alter the budgetary impact of entitlements, grants, user fees, or loan programs or the rights and obligations of recipients thereof; or

(4) Raise novel legal or policy issues arising out of legal mandates, the President's priorities, or the principles set forth in the Executive Order.

The EPA has determined that this direct final rule does not meet any of the criteria enumerated above and therefore, does not constitute a "significant regulatory action" under the terms of Executive Order 12866.

C. Executive Order 13045

Executive Order 13045, "Protection of Children from Environmental Health Risks and Safety Risks" (62 FR 19885, April 23, 1997), applies to any rule that is determined to be "economically significant" as defined under Executive Order 12866, and concerns an environmental health or safety risk that EPA has reason to believe may have a disproportionate effect on children. If the regulatory action meets both criteria, the Agency must evaluate the environmental health or safety effects of the planned rule on children, and explain why the planned regulation is preferable to other potentially effective and reasonably feasible alternatives considered by the Agency.

The EPA interprets Executive Order 13045 as applying only to those regulatory actions that are based on health or safety risks, such that the analysis required under section 5–501 of the Executive Order has the potential to influence the regulation. This direct final rule is not subject to Executive Order 13045 because it does not establish an environmental standard intended to mitigate health or safety risks.

D. Paperwork Reduction Act

For both the Group I and Group IV Polymers and Resins NESHAP, the information collection requirements (ICRs) were submitted to OMB under the Paperwork Reduction Act. At promulgation, OMB had already approved the ICR for the Group IV Polymers and Resins NESHAP and assigned OMB control number 2060–0351. Subsequently, OMB approved the ICR for the Group I Polymers and Resins NESHAP, and on July 15, 1997 (62 FR 37720) assigned OMB control number 2060–0356.

An Agency may not conduct or sponsor, and a person is not required to respond to a collection of information unless it displays a currently valid OMB control number. The OMB control numbers for EPA's regulations are listed in 40 CFR part 9 and 48 CFR Chapter 15. The EPA has amended 40 CFR 9.1 to indicate the ICRs contained in the Group I and IV Polymers and Resins NESHAP.

The amendments to the NESHAP contained in this direct final rule should have no impact on the information collection burden estimates made previously. Therefore, the ICRs have not been revised.

E. Regulatory Flexibility Act

The EPA has determined that it is not necessary to prepare a regulatory flexibility analysis in connection with this direct final rule. The EPA has also determined that this direct final rule will not have a significant adverse economic impact on a substantial number of small businesses, as it only stays the compliance dates for certain sources and imposes no additional regulatory requirements on owners or operators of affected sources.

F. Submission to Congress and the Comptroller General

The Congressional Review Act, 5 U.S.C. 801 *et seq.*, as added by the Small Business Regulatory Enforcement Fairness Act of 1996, generally provides that before a rule may take effect, the agency promulgating the rule must submit a rule report, which includes a copy of the rule, to each House of the Congress and to the Comptroller General of the United States. The EPA will submit a report containing this direct final rule and other required information to the U.S. Senate, the U.S. House of Representatives, and the Comptroller General of the United States prior to publication of the rule in the **Federal Register**. This direct final rule is not a "major rule" as defined by 5 U.S.C. 804(2).

G. Unfunded Mandates

Title II of the Unfunded Mandates Reform Act of 1995 (UMRA), Pub.L. 104–4, establishes requirements for Federal agencies to assess the effects of their regulatory actions on State, local, and tribal governments and the private sector. Under section 202 of the UMRA, EPA generally must prepare a written statement, including a cost-benefit analysis, for proposed and final rules with "Federal mandates" that may result in expenditures to State, local, and tribal governments, in the aggregate, or to the private sector, of $100 million or more in any 1 year. Before promulgating an EPA rule for which a written statement is needed, section 205 of the UMRA generally requires EPA to identify and consider a reasonable number of regulatory alternatives and adopt the least costly, most cost-effective or least burdensome alternative that achieves the objectives of the rule. The provisions of section 205 do not apply when they are inconsistent with applicable law. Moreover, section 205 allows EPA to adopt an alternative other than the least costly, most cost-effective, or least burdensome alternative if the Administrator publishes with the final rule an explanation why that alternative was not adopted. Before EPA establishes any regulatory requirements that may significantly or uniquely affect small governments, including tribal governments, it must have developed under section 203 of the UMRA a small government agency plan. The plan must provide for notifying potentially affected small governments, enabling officials of affected small governments to have meaningful and timely input in the development of EPA regulatory proposals with significant Federal intergovernmental mandates, and informing, educating, and advising small governments on compliance with the regulatory requirements.

The EPA has determined that this direct final rule does not contain a Federal mandate that may result in expenditures of $100 million or more for State, local, and tribal governments, in aggregate, or the private sector in any 1 year, nor does this direct final rule significantly or uniquely impact small governments, because it contains no requirements that apply to such governments or impose obligations upon them. Thus, the requirements of the UMRA do not apply to this direct final rule.

H. Executive Order 12875

Under Executive Order 12875, EPA may not issue a regulation that is not required by statute and that creates a

mandate upon a State, local, or tribal governments, unless the Federal government provides the funds necessary to pay the direct compliance costs incurred by those governments, or EPA consults with those governments. If EPA complies by consulting, Executive Order 12875 requires EPA to provide to OMB a description of the extent of EPA's prior consultation with representatives of affected State, local, and tribal governments, the nature of their concerns, copies of any written communications from the governments, and a statement supporting the need to issue the regulation. In addition, Executive Order 12875 requires EPA to develop an effective process permitting elected officials and other representatives of State, local, and tribal governments "to provide meaningful and timely input in the development of regulatory proposals containing significant unfunded mandates."

Today's direct final rule does not create a mandate on State, local, or tribal governments. This direct final rule does not impose any enforceable duties on these entities. Accordingly, the requirements of section 1(a) of Executive Order 12875 do not apply to this direct final rule.

I. Executive Order 13084

Under Executive Order 13084, EPA may not issue a regulation that is not required by statute, that significantly or uniquely affects the communities of Indian tribal governments, and that imposes substantial direct compliance costs on those communities, unless the Federal government provides the funds necessary to pay the direct compliance costs incurred by the tribal governments, or EPA consults with those governments. If EPA complies by consulting, Executive Order 13084 requires EPA to provide to OMB, in a separately identified section of the preamble to the rule, a description of the extent of EPA's prior consultation with representatives of affected tribal governments, a summary of the nature of their concerns, and a statement supporting the need to issue the regulation. In addition, Executive Order 13084 requires EPA to develop an effective process permitting elected and other representatives of Indian tribal governments "to provide meaningful and timely input in the development of regulatory policies on matters that significantly or uniquely affect their communities."

This direct final rule does not significantly or uniquely affect the communities of Indian tribal governments. Further, the direct final rule, provided herein, does not significantly alter the control standards imposed by subpart U or subpart JJJ for any source, including any that may affect communities of the Indian tribal governments. Accordingly, the requirements of section 3(b) of Executive Order 13084 do not apply to this direct final rule.

J. National Technology Transfer and Advancement Act

Section 12(d) of the National Technology Transfer and Advancement Act of 1995 (NTTAA) directs all Federal agencies to use voluntary consensus standards instead of government-unique standards in their regulatory activities unless to do so would be inconsistent with applicable law or otherwise impractical. Voluntary consensus standards are technical standards (e.g., material specifications, test methods, sampling and analytical procedures, business practices, etc.) that are developed or adopted by one or more voluntary consensus standards bodies. Examples of organizations generally regarded as voluntary consensus standards bodies include the American Society for Testing and Materials (ASTM), the National Fire Protection Association (NFPA), and the Society of Automotive Engineers (SAE). The NTTAA requires Federal agencies like EPA to provide Congress, through OMB, with explanations when an agency decides not to use available and applicable voluntary consensus standards.

This action does not involve the promulgation of any new technical standards. Therefore, NTTAA requirements are not applicable to today's direct final rule.

List of Subjects in 40 CFR Part 63

Environmental protection, Air pollution control, Hazardous substances, Reporting and recordkeeping requirements.

Dated: June 24, 1999.

Carol M. Browner,

Administrator.

Title 40 of the Code of Federal Regulations, chapter I, part 63 is amended as follows:

PART 63—NATIONAL EMISSION STANDARDS FOR HAZARDOUS AIR POLLUTANTS FOR SOURCE CATEGORIES

1. The authority citation for part 63 continues to read as follows:

Authority: 42 U.S.C. 7401 *et seq.*

Subpart U—National Emission Standards for Hazardous Air Pollutant Emissions: Group I Polymers and Resins

2. Amend § 63.481 by revising paragraphs (b), (c) and (d)(6), to read as follows:

§ 63.481 Compliance schedule and relationship to existing applicable rules.

* * * * *

(b) New affected sources that commence construction or reconstruction after June 12, 1995 shall be in compliance with this subpart upon initial start up or September 5, 1996, whichever is later, as provided in § 63.6(b) of subpart A.

[**Note:** The compliance date for new affected sources with an initial start-up date on or after March 9, 1999 is stayed indefinitely. The EPA will publish a document in the **Federal Register** establishing a new compliance date for new affected sources with an initial startup date on or after March 9, 1999.]

* * * * *

(c) Existing affected sources shall be in compliance with this subpart (except for § 63.502 for which compliance is covered by paragraph (d) of this section) no later than 3 years after September 5, 1996, as provided in § 63.6(c) of subpart A, unless an extension has been granted as specified in paragraph (e) of this section.

[**Note:** The compliance date of September 5, 1999 for existing affected sources, except for emission points addressed under § 63.502, which are covered by paragraph (d) of this section, is stayed indefinitely. The EPA will publish a document in the **Federal Register** establishing a new compliance date for existing affected sources.]

(d) * * *

(6) Compliance with the heat exchange system provisions of § 63.104, as required in § 63.502(f), shall occur no later than September 5, 1999.

[**Note:** The compliance date of September 5, 1999 for the heat exchange provisions at existing affected sources is stayed indefinitely. The EPA will publish a document in the **Federal Register** establishing a new compliance date for heat exchange provisions at existing affected sources.]

* * * * *

Subpart JJJ—National Emission Standards for Hazardous Air Pollutant Emissions: Group IV Polymers and Resins

3. Amend § 63.1311 by revising paragraphs (b) and (c) to read as follows:

§ 63.1311 Compliance schedule and relationship to existing applicable rules.

* * * * *

(b) New affected sources that commence construction or reconstruction after March 29, 1995 shall be in compliance with this subpart upon initial start-up or February 27, 1998, whichever is later, as provided in § 63.6(b), except that new affected sources whose primary product, as determined using the procedures specified in § 63.1310(f), is poly(ethylene terephthalate) (PET) shall be in compliance with § 63.1331 upon initial start-up or February 27, 2001, whichever is later.

[**Note:** The compliance date for new affected sources with an initial start-up date on or after March 9, 1999 is stayed indefinitely. The EPA will publish a document in the **Federal Register** establishing a new compliance date for new affected sources with an initial start-up date on or after March 9, 1999.]

(c) Existing affected sources shall be in compliance with this subpart (except for § 63.1331 for which compliance is covered by paragraph (d) of this section) no later than September 12, 1999, as provided in § 63.6(c), unless an extension has been granted as specified in paragraph (e) of this section, except that the compliance date for the provisions contained in § 63.1329 is extended from September 12, 1999 to February 27, 2001, for existing affected sources whose primary product, as determined using the procedures specified in 63.1310(f), is PET using a continuous terephthalic acid high viscosity multiple end finisher process.

[**Note:** The compliance date of September 12, 1999 for existing affected sources, except for emission points addressed under § 63.1331, which are covered by paragraph (d) of this section, is stayed indefinitely. The EPA will publish a document in the **Federal Register** establishing a new compliance date for existing affected sources.]

* * * * *

[FR Doc. 99–16635 Filed 6–29–99; 8:45 am]

BILLING CODE 6560–50–P

ENVIRONMENTAL PROTECTION AGENCY

40 CFR Part 63

[AD–FRL–6369–6]

RIN 2060–AD06

Hazardous Air Pollutants: Regulations Governing Constructed or Reconstructed Major Sources

AGENCY: Environmental Protection Agency (EPA).

ACTION: Direct Final rule.

SUMMARY: On December 27, 1996, the Agency published a rule in the **Federal Register** implementing certain provisions in section 112(g) of the Clean Air Act (Act). After the effective date of that rule, all owners or operators of major sources of hazardous air pollutants (HAP) that are constructed or reconstructed are required to install maximum achievable control technology (MACT) (unless specifically exempted), provided they are located in a State with an approved title V permit program. When no applicable Federal emission limitation has been promulgated under section 112(d) of the Act, the Act requires the permitting authority (generally a State or local agency responsible for the program) to determine a MACT emission limitation on a case-by-case basis. If the permitting authority has not yet established procedures for requiring MACT on constructed or reconstructed major sources by the required date, the rule provides that the EPA Regional Administrator will determine MACT emission limitations on a case-by-case basis for a period of up to one year. This action amends the rule governing constructed or reconstructed major sources—by providing a longer time period (up to 30 months) during which the EPA Regional Administrator may determine MACT emission limitations on a case-by-case basis—if the permitting authority has not yet established procedures for requiring MACT on constructed or reconstructed major sources. This action is needed in order to ensure that major sources can obtain MACT determinations required for construction or reconstruction in those jurisdictions where permitting authorities require extra time to establish procedures to implement the section 112(g) rule.

EFFECTIVE DATE: This final rule amendment will be effective on July 30, 1999 without further notice, unless EPA receives adverse comments on this rulemaking by July 12, 1999 or a request for a hearing concerning the accompanying proposed rule is received by EPA by July 7, 1999. If EPA receives timely adverse comment or a timely hearing request, EPA will publish a withdrawal in the **Federal Register** informing the public that this direct final rule will not take effect and will proceed to promulgate a final rule based on the proposed rule.

ADDRESSES: *Comments.* Interested parties may submit comments on this rulemaking in writing (original and two copies, if possible) to Docket No. A–91–64 to the following address: Air and Radiation Docket and Information Center (6102), US Environmental Protection Agency, 401 M Street, S.W., Room 1500, Washington, D.C. 20460. The EPA requests that a separate copy of each public comment be sent to the contact person listed below (see **FOR FURTHER INFORMATION CONTACT**). Comments may also be submitted electronically by following the instructions provided in **SUPPLEMENTARY INFORMATION.** Public comments on this rulemaking will be accepted until July 12, 1999.

Docket. All information used in the development of this final action is contained in the preamble below. However, Docket No. A–91–64, containing the supporting information for the original Regulations Governing Constructed or Reconstructed Major Sources rule is available for public inspection and copying between 8:00 a.m. and 5:30 p.m., Monday through Friday at the Air and Radiation Docket and Information Center (6102), Room M–1500, U.S. Environmental Protection Agency, 401 M Street, S.W., Washington, D.C. 20460; telephone (202) 260–7548, fax (202) 260–4000. A reasonable fee may be charged for copying.

These documents can also be accessed through the EPA web site at: http://www.epa.gov/ttn/oarpg. For further information and general questions regarding the Technology Transfer Network (TTNWEB), call Mr. Hersch Rorex (919) 541–5637 or Mr. Phil Dickerson (919) 541–4814.

FOR FURTHER INFORMATION CONTACT: Ms. Kathy Kaufman, Information Transfer and Program Integration Division (MD–12), U.S. Environmental Protection Agency, Research Triangle Park, North Carolina 27711, telephone (919)541–0102.

SUPPLEMENTARY INFORMATION: EPA is publishing this rule amendment without prior proposal because we consider this to be a noncontroversial amendment; and we do not expect to receive any adverse comment. However, in the "Proposed Rules" section of this **Federal Register** publication, we are publishing a separate document that will serve as the proposal for this amendment, in the event we receive adverse comment or a hearing request and this direct final rule is subsequently withdrawn. This final rule amendment will be effective on July 30, 1999 without further notice, unless we receive adverse comment on this rulemaking by July 12, 1999 or a request for a hearing concerning the accompanying proposed rule is received by EPA by July 7, 1999. If EPA receives timely adverse comment or a timely hearing request, we will publish a withdrawal in the **Federal Register**

(b) New affected sources that commence construction or reconstruction after March 29, 1995 shall be in compliance with this subpart upon initial start-up or February 27, 1998, whichever is later, as provided in § 63.6(b), except that new affected sources whose primary product, as determined using the procedures specified in § 63.1310(f), is poly(ethylene terephthalate) (PET) shall be in compliance with § 63.1331 upon initial start-up or February 27, 2001, whichever is later.

[Note: The compliance date for new affected sources with an initial start-up date on or after March 9, 1999 is stayed indefinitely. The EPA will publish a document in the **Federal Register** establishing a new compliance date for new affected sources with an initial start-up date on or after March 9, 1999.]

(c) Existing affected sources shall be in compliance with this subpart (except for § 63.1331 for which compliance is covered by paragraph (d) of this section) no later than September 12, 1999, as provided in § 63.6(c), unless an extension has been granted as specified in paragraph (e) of this section, except that the compliance date for the provisions contained in § 63.1329 is extended from September 12, 1999 to February 27, 2001, for existing affected sources whose primary product, as determined using the procedures specified in 63.1310(f), is PET using a continuous terephthalic acid high viscosity multiple end finisher process.

[Note: The compliance date of September 12, 1999 for existing affected sources, except for emission points addressed under § 63.1331, which are covered by paragraph (d) of this section, is stayed indefinitely. The EPA will publish a document in the **Federal Register** establishing a new compliance date for existing affected sources.]

* * * * *

[FR Doc. 99–16635 Filed 6–29–99; 8:45 am]

BILLING CODE 6560–50–P

ENVIRONMENTAL PROTECTION AGENCY

40 CFR Part 63

[AD–FRL–6369–6]

RIN 2060–AD06

Hazardous Air Pollutants: Regulations Governing Constructed or Reconstructed Major Sources

AGENCY: Environmental Protection Agency (EPA).

ACTION: Direct Final rule.

SUMMARY: On December 27, 1996, the Agency published a rule in the **Federal Register** implementing certain provisions in section 112(g) of the Clean Air Act (Act). After the effective date of that rule, all owners or operators of major sources of hazardous air pollutants (HAP) that are constructed or reconstructed are required to install maximum achievable control technology (MACT) (unless specifically exempted), provided they are located in a State with an approved title V permit program. When no applicable Federal emission limitation has been promulgated under section 112(d) of the Act, the Act requires the permitting authority (generally a State or local agency responsible for the program) to determine a MACT emission limitation on a case-by-case basis. If the permitting authority has not yet established procedures for requiring MACT on constructed or reconstructed major sources by the required date, the rule provides that the EPA Regional Administrator will determine MACT emission limitations on a case-by-case basis for a period of up to one year. This action amends the rule governing constructed or reconstructed major sources—by providing a longer time period (up to 30 months) during which the EPA Regional Administrator may determine MACT emission limitations on a case-by-case basis—if the permitting authority has not yet established procedures for requiring MACT on constructed or reconstructed major sources. This action is needed in order to ensure that major sources can obtain MACT determinations required for construction or reconstruction in those jurisdictions where permitting authorities require extra time to establish procedures to implement the section 112(g) rule.

EFFECTIVE DATE: This final rule amendment will be effective on July 30, 1999 without further notice, unless EPA receives adverse comments on this rulemaking by July 12, 1999 or a request for a hearing concerning the accompanying proposed rule is received by EPA by July 7, 1999. If EPA receives timely adverse comment or a timely hearing request, EPA will publish a withdrawal in the **Federal Register** informing the public that this direct final rule will not take effect and will proceed to promulgate a final rule based on the proposed rule.

ADDRESSES: *Comments.* Interested parties may submit comments on this rulemaking in writing (original and two copies, if possible) to Docket No. A–91–64 to the following address: Air and Radiation Docket and Information Center (6102), US Environmental Protection Agency, 401 M Street, S.W., Room 1500, Washington, D.C. 20460. The EPA requests that a separate copy of each public comment be sent to the contact person listed below (see **FOR FURTHER INFORMATION CONTACT**). Comments may also be submitted electronically by following the instructions provided in **SUPPLEMENTARY INFORMATION.** Public comments on this rulemaking will be accepted until July 12, 1999.

Docket. All information used in the development of this final action is contained in the preamble below. However, Docket No. A–91–64, containing the supporting information for the original Regulations Governing Constructed or Reconstructed Major Sources rule is available for public inspection and copying between 8:00 a.m. and 5:30 p.m., Monday through Friday at the Air and Radiation Docket and Information Center (6102), Room M–1500, U.S. Environmental Protection Agency, 401 M Street, S.W., Washington, D.C. 20460; telephone (202) 260–7548, fax (202) 260–4000. A reasonable fee may be charged for copying.

These documents can also be accessed through the EPA web site at: http://www.epa.gov/ttn/oarpg. For further information and general questions regarding the Technology Transfer Network (TTNWEB), call Mr. Hersch Rorex (919) 541–5637 or Mr. Phil Dickerson (919) 541–4814.

FOR FURTHER INFORMATION CONTACT: Ms. Kathy Kaufman, Information Transfer and Program Integration Division (MD–12), U.S. Environmental Protection Agency, Research Triangle Park, North Carolina 27711, telephone (919)541–0102.

SUPPLEMENTARY INFORMATION: EPA is publishing this rule amendment without prior proposal because we consider this to be a noncontroversial amendment; and we do not expect to receive any adverse comment. However, in the "Proposed Rules" section of this **Federal Register** publication, we are publishing a separate document that will serve as the proposal for this amendment, in the event we receive adverse comment or a hearing request and this direct final rule is subsequently withdrawn. This final rule amendment will be effective on July 30, 1999 without further notice, unless we receive adverse comment on this rulemaking by July 12, 1999 or a request for a hearing concerning the accompanying proposed rule is received by EPA by July 7, 1999. If EPA receives timely adverse comment or a timely hearing request, we will publish a withdrawal in the **Federal Register**

informing the public that this direct final rule will not take effect. In that event, we will address all public comments in a subsequent final rule, based on the proposed rule amendment published in the "Proposed Rules" section of this **Federal Register** document. The EPA will not provide further opportunity for public comment on this action. Any parties interested in commenting on this amendment must do so at this time. Electronic comments and data may be submitted by sending electronic mail (e-mail) to: a-and-r-docket@epamail.epa.gov. Submit comments as an ASCII file, avoiding the use of special characters and any form of encryption. Comments and data will also be accepted on diskette in Word Perfect 5.1 or 6.1 or ACSII file format. Identify all comments and data in electronic form by the docket numbers A–91–64. No Confidential Business Information (CBI) should be submitted through electronic mail. Electronic comments may be filed online at many Federal Depository Libraries.

Outline. The information presented in this preamble is organized as follows:

I. What are the relative responsibilities of permitting authorities and EPA Regional Offices under the current Section 112(g) rule?
II. Why does EPA want to amend these relative responsibilities in some cases?
III. What are the requirements to review this action in Court?
IV. Administrative Requirements
A. Docket
B. Paper Reduction Act
C. E.O. 12866: The Unfunded Mandates Reform Act of 1995, the Regulatory Flexibility Act, and the Small Business Regulatory Enforcement Fairness Act of 1996
D. National Technology Transfer and Advancement Act
E. E.O. 13045: Protection of Children from Environmental Health and Safety Risks
F. E.O. 13084: Consultation and Coordination with Indian Tribal Governments
G. E.O. 12875: Enhancing the Intergovernmental Partnership
H. Submission to Congress and the Comptroller General

I. What are the Relative Responsibilities of Permitting Authorities and EPA Regional Offices Under the Current Section 112(g) Rule?

Section 112(g) is effective in a State or local jurisdiction on the date specified by the permitting authority, at the time it adopts a program to implement section 112(g), or June 29, 1998, whichever is earlier. Thus, permitting authorities had until June 29, 1998 to initiate implementing programs. To place its implementing program into effect, the chief executive officer of the State or local jurisdiction must have certified to the EPA that its program meets all the requirements set forth in this rule, and published a notice stating that the program has been adopted and specifying its effective date. The program need not have been officially reviewed or approved by the EPA.

After June 29, 1998, if a State or local permitting authority had not yet initiated a program to implement the section 112(g) rule, there have been two options for obtaining a MACT approval: either (1) the permitting authority would make section 112(g) determinations according to procedures specified in § 63.43 of this rule, and issue a Notice of MACT Approval that would become final and legally enforceable after the EPA had concurred in writing with the permitting authority's determination; or (2) the EPA Regional Administrator would issue section 112(g) determinations for up to 1 year—i.e. until June 29, 1999.

II. Why Does EPA Want to Amend These Relative Responsibilities in Some Cases?

If the permitting authority had not yet initiated an implementing program by June 29, 1999, the section 112(g) rule did not provide an explicit mechanism by which construction permits could be issued. It was assumed that all permitting authorities would have established section 112(g) programs by that time. However, it has now become clear that a few permitting authorities will not have initiated an implementing program by June 29, 1999. In addition, some of these jurisdictions believe that they may not yet have the authority even to issue a Notice of MACT Approval for EPA concurrence. Therefore, in some jurisdictions, after June 29, 1999, it is possible that there could be no mechanism by which a major source could receive the MACT determination required by the Act in order to construct.

This action therefore provides a longer time period (up to 30 months) during which the EPA Regional Administrator may determine MACT emission limitations on a case-by-case basis, if the permitting authority has not yet established procedures for requiring MACT on constructed or reconstructed major sources. This action is needed in order to ensure that major sources can obtain MACT determinations required for construction or reconstruction in those jurisdictions where permitting authorities require extra time to establish procedures to implement the section 112(g) rule. We believe that this action provides enough extra time for permitting authorities to establish procedures for requiring MACT on constructed or reconstructed major sources, as required by section 112(g) of the Act.

III. What are the Requirements to Review This Action in Court?

Under Section 307(b)(1) of the Act, judicial review of this final rule is available only by the filing of a petition for review in the U.S. Court of Appeals for the District of Columbia Circuit by August 30, 1999. Any such judicial review is limited to only those objections which are raised with reasonable specificity in timely comments. Under Section 307(b)(2) of the Act, the requirements that are the subject of this final rule may not be challenged later in civil or criminal proceedings brought by EPA to enforce these requirements.

IV. Administrative Requirements

A. Docket

The docket for this regulatory action is A–91–64, the same docket as the original final rule, and a copy of today's amendment to the final rule will be included in the docket. The principle purposes of the docket are: (1) to allow interested parties a means to identify and locate documents so that they can effectively participate in the rulemaking process; and (2) to serve as the record in case of judicial review (except for interagency review materials) (Section 307(d)(7)(A) of the Act). The docket is available for public inspection at the EPA's Air and Radiation Docket and Information Center, the location of which is given in the **ADDRESSES** section of this document.

B. Paper Reduction Act

The information collection requirements of the previously promulgated rule for Regulations Governing Equivalent Emission Limitations by Permit were submitted to and approved by the Office of Management and Budget. A copy of this Information Collection Request (ICR) document (ICR No. 1658.01) may be obtained from Sandy Farmer, OPPE Regulatory Information Division (2136), U.S. Environmental Protection Agency, 401 M Street, S.W., Washington, D.C. 20460, or by calling (202) 260–2740. Today's change to the final rule does not affect the information collection burden estimates made previously. Therefore, the ICR has not been revised.

C. Analysis Under E.O. 12866, the Unfunded Mandates Reform Act of 1995, the Regulatory Flexibility Act, and the Small Business Regulatory Enforcement Fairness Act of 1996

Because the regulatory revisions that are the subject of today's notice would delay an existing requirement, this action is not a "significant" regulatory action within the meaning of Executive Order 12866, and does not impose any Federal mandate on State, local and tribal governments or the private sector within the meaning of the Unfunded Mandates Reform Act of 1995. Further, the EPA has determined that it is not necessary to prepare a regulatory flexibility analysis in connection with this action under the Regulatory Flexibility Act and the Small Business Regulatory Enforcement Fairness Act of 1996. The regulatory change proposed here is not expected to affect the regulatory burdens on small businesses, and will not have a significant impact on a substantial number of small entities.

D. National Technology Transfer and Advancement Act

Under Section 12 of the National Technology Transfer and Advancement Act of 1995, the EPA must consider the use of "voluntary consensus standards," if available and applicable, when implementing policies and programs, unless it would be "inconsistent with applicable law or otherwise impractical." The intent of the National Technology Transfer and Advancement Act is to reduce the costs to the private and public sectors by requiring federal agencies to draw upon any existing, suitable technical standards used in commerce or industry.

A "voluntary consensus standard" is a technical standard developed or adopted by a legitimate standards-developing organization. The Act defines "technical standards" as "performance-based or design-specific technical specifications and related management systems practices." A legitimate standards-developing organization must produce standards by consensus and observe principles of due process, openness, and balance of interests. Examples of organizations that are regarded as legitimate standards-developing organizations include the American Society for Testing and Materials (ASTM), International Organization for Standardization (ISO), International Electrotechnical Commission (IEC), American Petroleum Institute (API), National Fire Protection Association (NFPA) and Society of Automotive Engineers (SAE).

Since today's action does not involve the establishment or modification of technical standards, the requirements of the National Technology Transfer and Advancement Act do not apply.

E. Executive Order 13045—Protection of Children From Environmental Health Risks and Safety Risks

Executive Order 13045, entitled Protection of Children from Environmental Health Risks and Safety Risks (62 FR 19885, April 23, 1997), applies to any rule that (1) OMB determines is "economically significant" as defined under Executive Order 12866, and (2) EPA determines the environmental health or safety risk addressed by the rule has a disproportionate effect on children. If the regulatory action meets both criteria, the Agency must evaluate the environmental health or safety aspects of the planned rule on children, and explain why the planned regulation is preferable to other potentially effective and reasonably feasible alternatives considered by the Agency.

These regulatory revisions are not subject to the Executive Order because it is not economically significant as defined in E.O. 12866, and because the Agency does not have reason to believe the environmental health or safety risks addressed by this action present a disproportionate risk to children.

F. Executive Order 13084—Consultation and Coordination With Indian Tribal Governments

Under Executive Order 13084, EPA may not issue a regulation that is not required by statute, that significantly or uniquely affects the communities of Indian tribal governments, and that imposes substantial direct compliance costs on those communities, unless the Federal government provides the funds necessary to pay the direct compliance costs incurred by the tribal governments, or EPA consults with those governments. If EPA complies by consulting, Executive Order 13084 requires EPA to provide to the Office of Management and Budget, in a separately identified section of the preamble to the rule, a description of the extent of EPA's prior consultation with representatives of affected tribal governments, a summary of the nature of their concerns, and a statement supporting the need to issue the regulation. In addition, Executive Order 13084 requires EPA to develop an effective process permitting elected officials and other representatives of Indian tribal governments "to provide meaningful and timely input in the development of regulatory policies on matters that significantly or uniquely affect their communities."

Today's rule does not significantly or uniquely affect the communities of Indian tribal governments. These rule revisions impose no enforceable duties on these entities. Accordingly, the requirements of Section 3(b) of Executive Order 13084 do not apply to this rule.

G. Executive Order 12875: Enhancing the Intergovernmental Partnership

Under Executive Order 12875, EPA may not issue a regulation that is not required by statute and that creates a mandate upon a State, local or tribal government, unless the Federal government provides the funds necessary to pay the direct compliance costs incurred by those governments, or EPA consults with those governments. If EPA complies by consulting, Executive Order 12875 requires EPA to provide to the Office of Management and Budget a description of the extent of EPA's prior consultation with representatives of affected State, local and tribal governments, the nature of their concerns, copies of any written communications from the governments, and a statement supporting the need to issue the regulation. In addition, Executive Order 12875 requires EPA to develop an effective process permitting elected officials and other representatives of State, local and tribal governments "to provide meaningful and timely input in the development of regulatory proposals containing significant unfunded mandates."

Today's rule changes do not create a mandate on State, local or tribal governments. The rule changes do not impose any additional enforceable duties on these entities. Accordingly, the requirements of Section 1(a) of Executive Order 12875 do not apply to this rule.

H. Submission to Congress and the Comptroller General

The Congressional Review Act, 5 U.S.C. 801 *et seq.*, as added by the Small Business Regulatory Enforcement Fairness Act of 1996, generally provides that before a rule may take effect, the agency promulgating the rule must submit a rule report, which includes a copy of the rule, to each House of the Congress and to the Comptroller General of the United States. EPA will submit a report containing this rule and other required information to the U.S. Senate, the U.S. House of Representatives, and the Comptroller General of the United States prior to publication of the rule in the **Federal Register**. This action is not

a "major rule" as defined by 5 U.S.C. 804(2).

List of Subjects in 40 CFR Part 63

Environmental protection, Administrative practices and procedures, Air pollution control, Hazardous substances, Intergovernmental relations, Reporting and recordkeeping requirements.

Dated: June 24, 1999.

Carol M. Browner,

Administrator.

For the reasons set out in the preamble, 40 CFR Part 63 is amended as follows:

PART 63—[AMENDED]

1. The authority citation for part 63 continues to read as follows:

Authority: 42 U.S.C. 7401 *et seq.*

2. Section 63.42(b) is revised to read as follows:

§ 63.42 Program requirements governing construction or reconstruction of major sources.

* * * * *

(b) *Failure to adopt program.* In the event that the permitting authority fails to adopt a program to implement section 112(g) with respect to construction or reconstruction of major sources of HAP with an effective date on or before June 29, 1998, and the permitting authority concludes that it is able to make case-by-case MACT determinations which conform to the provisions of § 63.43 in the absence of such a program, the permitting authority may elect to make such determinations. However, in those instances where the permitting authority elects to make case-by-case MACT determinations in the absence of a program to implement section 112(g) with respect to construction or reconstruction of major sources of HAP, no such case-by-case MACT determination shall take effect until after it has been submitted by the permitting authority in writing to the appropriate EPA Regional Adminstrator and the EPA Regional Administrator has concurred in writing that the case-by-case MACT determination by the permitting authority is in conformity with all requirements established by §§ 63.40 through 63.44. In the event that the permitting authority fails to adopt a program to implement section 112(g) with respect to construction or reconstruction of major sources of HAP with an effective date on or before June 29, 1998, and the permitting authority concludes that it is unable to make case-by-case MACT determinations in the absence of such a program, the permitting authority may request that the EPA Regional Administrator implement a transitional program to implement section 112(g) with respect to construction or reconstruction of major sources of HAP in the affected State of local jurisdiction while the permitting authority completes development and adoption of a section 112(g) program. Any such transitional section 112(g) program implemented by the EPA Regional Administrator shall conform to all requirements established by §§ 63.40 through 63.44, and shall remain in effect for no more than 30 months. Continued failure by the permitting authority to adopt a program to implement section 112(g) with respect to construction or reconstruction of major sources of HAP shall be construed as a failure by the permitting authority to adequately administer and enforce its title V permitting program and shall constitute cause by EPA to apply the sanctions and remedies set forth in the Clean Air Act section 502(I).

* * * * *

[FR Doc. 99-16681 Filed 6-29-99; 8:45 am]

BILLING CODE 6560-50-P

ENVIRONMENTAL PROTECTION AGENCY

40 CFR Part 180

[OPP-300876; FRL-6086-3]

RIN 2070-AB78

Cyprodinil; Pesticide Tolerance for Emergency Exemption

AGENCY: Environmental Protection Agency (EPA).

ACTION: Final rule.

SUMMARY: This regulation establishes a time-limited tolerance for residues of cyprodinil in or on caneberries. This action is in response to EPA's granting of an emergency exemption under section 18 of the Federal Insecticide, Fungicide, and Rodenticide Act authorizing use of the pesticide on caneberries. This regulation establishes a maximum permissible level for residues of cyprodinil in this food commodity pursuant to section 408(l)(6) of the Federal Food, Drug, and Cosmetic Act, as amended by the Food Quality Protection Act of 1996. The tolerance will expire and is revoked on December 31, 2000.

DATES: This regulation is effective June 30, 1999. Objections and requests for hearings must be received by EPA on or before August 30, 1999.

ADDRESSES: Written objections and hearing requests, identified by the docket control number [OPP-300876], must be submitted to: Hearing Clerk (1900), Environmental Protection Agency, Rm. M3708, 401 M St., SW., Washington, DC 20460. Fees accompanying objections and hearing requests shall be labeled "Tolerance Petition Fees" and forwarded to: EPA Headquarters Accounting Operations Branch, OPP (Tolerance Fees), P.O. Box 360277M, Pittsburgh, PA 15251. A copy of any objections and hearing requests filed with the Hearing Clerk identified by the docket control number, [OPP-300876], must also be submitted to: Public Information and Records Integrity Branch, Information Resources and Services Division (7502C), Office of Pesticide Programs, Environmental Protection Agency, 401 M St., SW., Washington, DC 20460. In person, bring a copy of objections and hearing requests to Rm. 119, Crystal Mall 2 (CM #2), 1921 Jefferson Davis Hwy., Arlington, VA.

A copy of objections and hearing requests filed with the Hearing Clerk may also be submitted electronically by sending electronic mail (e-mail) to: opp-docket@epa.gov. Copies of electronic objections and hearing requests must be submitted as an ASCII file avoiding the use of special characters and any form of encryption. Copies of objections and hearing requests will also be accepted on disks in WordPerfect 5.1/6.1 or ASCII file format. All copies of electronic objections and hearing requests must be identified by the docket control number [OPP-300876]. No Confidential Business Information (CBI) should be submitted through e-mail. Copies of electronic objections and hearing requests on this rule may be filed online at many Federal Depository Libraries.

FOR FURTHER INFORMATION CONTACT: By mail: Stephen Schaible, Registration Division (7505C), Office of Pesticide Programs, Environmental Protection Agency, 401 M St., SW., Washington, DC 20460. Office location, telephone number, and e-mail address: Rm. 271, CM #2, 1921 Jefferson Davis Hwy., Arlington, VA, (703) 308-9362, schaible.stephen@epa.gov.

SUPPLEMENTARY INFORMATION: EPA, on its own initiative, pursuant to section 408(l)(6) of the Federal Food, Drug, and Cosmetic Act (FFDCA), 21 U.S.C. 346a, is establishing a tolerance for residues of the fungicide cyprodinil, in or on caneberries at 10 parts per million (ppm). This tolerance will expire and is revoked on December 31, 2000. EPA will publish a document in the **Federal Register** to remove the revoked

that before a rule may take effect, the agency promulgating the rule must submit a rule report, which includes a copy of the rule, to each House of the Congress and to the Comptroller General of the United States. EPA will submit a report containing this rule and other required information to the U.S. Senate, the U.S. House of Representatives, and the Comptroller General of the United States prior to publication of the rule in the **Federal Register**. This rule is not a "major rule" as defined by 5 U.S.C. 804(2).

H. Petitions for Judicial Review

Under section 307(b)(1) of the Clean Air Act, petitions for judicial review of this action to approve the revisions to West Virginia regulation 45 CSR 5 must be filed in the United States Court of Appeals for the appropriate circuit by September 13, 1999. Filing a petition for reconsideration by the Administrator of this final rule does not affect the finality of this rule for the purposes of judicial review nor does it extend the time within which a petition for judicial review may be filed, and shall not postpone the effectiveness of such rule or action. This action may not be challenged later in proceedings to enforce its requirements. (See section 307(b)(2).)

List of Subjects in 40 CFR Part 52

Environmental protection, Air pollution control, Incorporation by reference, Particulate matter, Reporting and recordkeeping requirements.

Dated: June 29, 1999.

Thomas Voltaggio,

Acting Regional Administrator, Region III.

40 CFR part 52 is amended as follows:

PART 52—[AMENDED]

1. The authority citation for part 52 continues to read as follows:

Authority: 42 U.S.C. 7401 *et seq.*

Subpart XX—West Virginia

2. Section 52.2520 is amended by adding paragraphs (c)(42) to read as follows:

§ 52.2520 Identification of plan.

* * * * *

(c) * * *

(42) Revisions to the West Virginia Regulations for coal preparation and handling facilities 45CSR5 submitted on August 10, 1993 by the West Virginia Department of Commerce, Labor and Environmental Resources:

(i) Incorporation by reference.

(A) Letter of August 10, 1993 from the West Virginia Department of Commerce, Labor, and Environmental Resources transmitting revisions to West Virginia's regulation 45CSR5 "To Prevent and Control Air Pollution From the Operation of Coal Preparation Plants and Coal Handling Operations".

(B) Revisions to West Virginia regulation 45CSR5 regarding coal preparation and handling plants specifically: Revisions to 45CSR5 which require specific emission limits on particulate matter emissions at coal preparation and handling facilities in the Follansbee PM10 nonattainment area, monitoring of thermal driers and control equipment statewide, revised permitting, testing and reporting requirements.

(ii) Additional Material—Remainder of the August 10, 1993 submittal on 45CSR5.

[FR Doc. 99-17626 Filed 7-12-99; 8:45 am]

BILLING CODE 6560-50-P

ENVIRONMENTAL PROTECTION AGENCY

40 CFR Part 63

[FRL-6376-5]

National Emission Standards for Hazardous Air Pollutants: Halogenated Solvent Cleaning

AGENCY: Environmental Protection Agency (EPA).

ACTION: Direct final rule.

SUMMARY: This final rule amends the national emission standard for hazardous air pollutants (NESHAP) for halogenated solvent cleaning by: permanently exempting nonmajor (or "area") batch cold solvent cleaning machines that use halogenated solvent from the Federal operating permit program; and deferring Federal operating permit requirements until December 9, 1999 for all other nonmajor halogenated solvent cleaning machines. With this amendment, these sources will be treated by our Federal Operating Permits Program in the same way EPA allows them to be treated by State operating permit programs adopted under title V of the Clean Air Act (CAA). State programs are already allowed to exempt/defer such sources from their requirements for title V operating permits. Without today's amendment, sources located in areas that do not have State title V permit programs (such as Indian country) could be subject to more burdensome requirements than may apply to sources located elsewhere. Today's action will reduce an undue regulatory burden on industry as well as on EPA's Regional Offices.

DATES: This rule takes effect on September 13, 1999, without further notice unless EPA receives adverse comment by August 12, 1999. If EPA receives such comment, EPA will publish a timely withdrawal in the **Federal Register** informing the public that this rule will not take effect.

ADDRESSES: *Comments.* If you have adverse comments on this action, you may submit them in writing (in duplicate, if possible) to Docket No. A-92-39 at the following address: Air and Radiation Docket and Information Center (MC-6102), U.S. Environmental Protection Agency, 401 M Street, SW, Washington, DC, 20460. EPA requests that you send a separate copy of the comments to the contact person listed below at the same time that you submit comments to the docket.

Docket. Today's direct final rulemaking and other related materials are available for review in the docket. Copies may be obtained by request from the Air Docket by calling (202) 260-7548. This docket is available for public inspection and copying between 8:30 a.m. and 3:30 p.m., Monday through Friday, at EPA's Air Docket, Room M-1500, Waterside Mall, 401 M Street SW, Washington, DC, 20460. A reasonable fee may be charged for copying.

FOR FURTHER INFORMATION CONTACT: For information about the final rule, contact Candace Carraway (telephone 919-541-3189), U.S. Environmental Protection Agency, Office of Air Quality Planning and Standards, Mail Drop 12, Research Triangle Park, North Carolina, 27711.

SUPPLEMENTARY INFORMATION: Throughout this document wherever "we", "us" or "our" are used we mean EPA.

Entities Affected by This Action

Entities affected by this action are stationary air sources that are nonmajor halogenated solvent cleaning machines (typically known as "degreasers") that are (1) subject to subpart T of 40 CFR part 63, and (2) subject to the Federal Operating Permits Program rule at 40 CFR part 71. Examples of affected categories and entities are in the following table:

Category	NAICS code	Examples of affected entities
Halogenated Solvent Cleaners	447	Gasoline Stations.
	332	Fabricated Metal Product Manufacturing.
	333	Machinery Manufacturing.
	334	Computer and Electronic Product Manufacturing.
	335	Electrical Equipment, Appliance, and Component Manufacturing.
	336	Transportation Equipment Manufacturing.

This table is not exhaustive. Numerous industries use halogenated solvent cleaners. Other types of entities not listed in the table could also be affected by this action.

Rationale for Direct Final Rulemaking

We are publishing this rule without prior proposal because we view this as a noncontroversial amendment and anticipate no adverse comment. However, in the "Proposed Rules" section of today's **Federal Register** publication, we are publishing a separate proposal to exempt and defer nonmajor halogenated solvent cleaners if adverse comments are filed. This rule will be effective on September 13, 1999, without further notice unless we receive adverse comment by August 12, 1999. If we receive adverse comment, we will publish a timely withdrawal in the **Federal Register** informing the public that the rule will not take effect. We will address all public comments in a later final rule based on the proposed rule. We will not start a second comment period on this action. If you want to comment, you must do so at this time.

Outline

The contents of today's preamble are listed in the following outline:

I. Background of the Final Rule
A. Statutory and Regulatory Framework
B. Rationale for Exemption/Deferral
II. Administrative Requirements
A. Docket
B. Executive Order 12866
C. Regulatory Flexibility
D. Paperwork Reduction Act
E. Unfunded Mandates Reform Act
F. Submission to Congress and the General Accounting Office
G. Executive Order 13045
H. Executive Order 12875
I. Executive Order 13084
J. National Technology Transfer Advancement Act

I. Background of the Final Rule

Under section 112 of the CAA, stationary air pollution sources that do not have the potential to emit 10 or more tons per year of a single hazardous air pollutant (HAP) and 25 or more tons per year of total HAP are nonmajor or area sources. Our regulations provide that sources with the potential to emit greater than these levels are major sources and must obtain a title V operating permit from a State, local, or Tribal permitting authority, or from us if the permitting authority does not administer a permit program that we have approved.

Many halogenated solvent cleaners are nonmajor sources. When we adopted regulations for halogenated solvent cleaners, we allowed State and local agencies to exempt or defer nonmajor sources from their permit programs. Today's rulemaking provides a level playing field by allowing nonmajor halogenated solvent cleaners out of our Federal Operating Permit Program on a permanent or temporary (deferred) basis.

However, a title V permit is required if the nonmajor or area halogenated solvent cleaner is:

- Subject to title V for a reason other than being subject to the area source requirements in the NESHAP for halogenated solvent cleaning, or
- Located at a facility that is required to obtain a title V permit (e.g., the facility is a major source).

The statutory and regulatory framework discussed below provides background information on the permitting requirements of title V of the CAA, the criteria that we use to decide whether to allow the exemption of sources from permitting requirements, and the action we have already taken to allow State, local, and Tribal agencies to exempt or defer nonmajor halogenated solvent cleaners.

A. Statutory and Regulatory Framework

1. Permitting Requirements under the CAA

Title V of the CAA as amended in 1990 (42 U.S.C. 7661 et seq.) requires us to develop regulations that set minimum standards for approvable State programs for operating permits. We issued those regulations (codified in part 70 of chapter I, title 40, of the CFR) on July 21, 1992 (57 FR 32250).

We issued rules establishing the Federal Operating Permit Program on July 1, 1996 (61 FR 34202), codified at 40 CFR part 71. The part 71 regulations authorize us to issue permits when a State, local, or Tribal agency has not developed an approvable program, has not adequately administered or enforced its approved operating permits program, or has not issued permits that comply with the applicable requirements of the CAA.

Section 502(a) of the CAA initially requires that major and nonmajor sources subject to standards or regulations under section 111 or 112 of the Act obtain operating permits. However, section 502(a) also provides that in some cases, we may exempt certain nonmajor source categories from the requirement to obtain operating permits. This means that nonmajor sources that are subject to the NESHAP for halogenated solvent cleaning must obtain title V permits unless the requirement is deferred or the sources are exempted from the requirement to obtain a permit.

2. Criteria for Exemptions from Permitting Requirements

We may exempt certain source categories from the requirement to obtain operating permits if we determine through rulemaking that compliance with such requirements is "impracticable, infeasible, or unnecessarily burdensome on such categories." We may not exempt major sources. When we issue standards or other requirements under section 112 of the CAA, we determine whether to exempt any or all nonmajor sources subject to the standard or requirement from the requirement to obtain a title V permit (40 CFR 70.3(b)(2); 40 CFR 71.3(b)(2)). If a NESHAP does not exempt or defer nonmajor sources from title V permitting, then nonmajor sources that are subject to the NESHAP must obtain title V permits (40 CFR 63.1(c)(2)(iii)).

3. Exemption and Deferral under the NESHAP for Halogenated Solvent Cleaning

The NESHAP for halogenated solvent cleaning were proposed in the **Federal Register** on November 29, 1993 (58 FR 62566) and were promulgated on December 2, 1994 (59 FR 61801). These standards were codified at 40 CFR part 63, subpart T.

In the 1994 final rule for halogenated solvent cleaning, we determined that

compliance with part 70 permitting requirements administered by State and local permitting authorities would be impracticable, infeasible, or unnecessarily burdensome on such sources. So, the final rule provided that owners or operators of any batch cold solvent cleaning machine that was not itself a major source of pollutants and that was not located at a major source could be exempt from permitting requirements under State title V operating permit programs (known as "part 70 programs")(40 CFR 63.468(j)). In addition, the final rule provided that States could defer permitting requirements for 5 years under their part 70 programs for all other types of solvent cleaning machines subject to subpart T, if the machines are not major or located at major sources. On June 5, 1995 (60 FR 29484), we promulgated corrections to the NESHAP which clarified the length of the deferral for nonmajor halogenated solvent cleaners, i.e., such sources may be deferred from part 70 permitting requirements until December 9, 1999.

B. Rationale for Exemption/Deferral

Today's action is necessary because the final NESHAP for halogenated solvent cleaning did not address whether to exempt or defer the permitting requirements that apply to sources that are subject to the part 71 program. We had not yet established the part 71 program when the final NESHAP was issued. It has recently come to our attention that numerous nonmajor halogenated solvent cleaners are located in Indian country. We believe it would not be appropriate to leave these sources subject to our operating permits program by default without considering whether the burden of obtaining permits would be any different for them than it would be for sources that are currently deferred or exempted under State and local operating permits programs. Without today's rulemaking, nonmajor halogenated solvent cleaners that are located in areas subject to the part 71 program (such as Indian country) would have to obtain a permit, while similar sources located in other areas might not. Today's action will eliminate this disparate treatment. However, note that today's action does not relieve sources of the requirement to meet all applicable requirements established by the NESHAP. Also, today's action does not affect the authority of State, local, or Tribal permitting authorities to require that these sources obtain title V permits.

The great majority of nonmajor sources nationwide are owned or operated by small businesses, and we believe this is also true for nonmajor halogenated solvent cleaners in Indian country. If required to obtain permits, many such businesses would require greater assistance from the permitting staff at our Regional Offices because of their relative lack of technical and legal expertise, resources, and experience in dealing with environmental regulation. If our Regional Offices are overburdened from a backlog of permits to be processed, nonmajor sources will be unable to obtain technical and procedural assistance necessary to help them file timely and complete applications. This scenario would constitute an impracticable, infeasible, and unnecessary burden on these nonmajor sources, especially considering that by definition they emit less than majors.

Currently, we administer the part 71 program for sources in U.S. Territories and on the Outer Continental Shelf as well as in Indian country. The vast majority of sources subject to the part 71 program are located in Indian country. We estimate that as many as 200 nonmajor halogenated solvent cleaners are in Indian country, and that most are owned or operated by small entities, primarily small gasoline service stations and repair shops.

We believe that requiring nonmajor halogenated solvent cleaners in Indian country to obtain title V permits when similar sources located elsewhere are generally not required to do so would have a disparate impact on the economies of Tribal communities. One of the benefits of the title V program is that it has improved enforcement of, as well as compliance with, applicable requirements that are included in the permit. However, we have previously concluded that for nonmajor halogenated solvent cleaners, States may determine that the burden associated with permitting outweighs the enhancement to the enforceability of the NESHAP which would result from including the standards in a part 70 permit. Similarly, we believe that the burden of permitting nonmajor halogenated solvent cleaners under the part 71 program outweighs the enforcement benefits. Also, we believe it is reasonable for purposes of national consistency for part 71 to provide such nonmajor sources the same relief from permitting requirements as is available under most State part 70 programs. So today's rule will exempt nonmajor batch cold solvent cleaners from part 71 and defer part 71 permitting requirements for other nonmajor halogenated solvent cleaners.

Besides burdening sources, requiring our Regional Offices to issue permits to these nonmajor sources would be burdensome on us and would divert our resources from permitting larger emitting sources. Unlike States, we have just 2 years in which to take action on all part 71 permit applications from Indian country sources. Permitting large numbers of nonmajor sources would stress our permitting system at its most vulnerable time and possibly keep us from issuing permits to both major and nonmajor sources on time. It could also divert resources from our efforts to develop substantive pollution control programs in Indian country and to assist Tribes in developing their own programs. Since pollution control programs in Indian country are far less developed than in neighboring States, we believe these efforts are more important than requiring nonmajor halogenated solvent cleaners to get part 71 permits.

The deferral from part 71 permitting requirements which is established in today's rulemaking extends to December 9, 1999 which is 5 years after the effective date of the first part 70 program that we approved. The existing deferral authorized for State, local, and Tribal part 70 programs also expires on December 9, 1999. If the deferral is not extended further, then halogenated solvent cleaners that are currently deferred would be required to submit title V permit applications to the applicable permitting authority (State, local, Tribal, or EPA) by December 9, 2000. Before that date, we plan to complete a rulemaking that addresses whether to extend the deferral under both part 70 and part 71 programs. The exemption for nonmajor batch cold solvent cleaners under part 70 and part 71 will not expire on December 9, 1999. No additional rulemaking is needed to extend it.

II. Administrative Requirements

A. Docket

The docket for this regulatory action is A-92-39. The docket is an organized and complete file of all the information submitted to or otherwise considered by EPA in the development of this rulemaking.

B. Executive Order 12866

Under Executive Order (E.O.) 12866 (58 FR 51735 (October 4, 1993)), the Agency must determine whether the regulatory action is "significant" and therefore subject to the Office of Management and Budget (OMB) review and the requirements of the Executive Order. The Order defines "significant" regulatory action as one that is likely to lead to a rule that may:

1. Have an annual effect on the economy of $100 million or more, adversely and materially affecting a sector of the economy, productivity, competition, jobs, the environment, public health or safety, or State, local or Tribal governments or communities;

2. Create a serious inconsistency or otherwise interfere with an action taken or planned by another agency;

3. Materially alter the budgetary impact of entitlements, grants, user fees, or loan program or the rights and obligation of recipients thereof;

4. Raise novel legal or policy issues arising out of legal mandates, the President's priorities, or the principles set forth in the Executive Order.

Pursuant to the terms of E.O. 12866, it has been determined that this rule is not a "significant" regulatory action because it does not raise any of the issues associated with "significant" regulatory actions. The rule will have a negligible effect on the economy and will not create any inconsistencies with other actions by other agencies, alter any budgetary impacts, or raise any novel legal or policy issues. For these reasons, this action was not submitted to OMB for review.

C. Regulatory Flexibility

We have determined that it is not necessary to prepare a regulatory flexibility analysis in connection with this final rule. We have also determined that this final rule will not have a significant economic impact on a substantial number of small entities. There are no compliance costs associated with this action. As explained earlier in this notice, this action relieves sources of regulatory requirements under the title V program.

D. Paperwork Reduction Act

The information collection requirements of the previously promulgated NESHAP were submitted to and approved by OMB. Today's changes to the NESHAP would not increase the information collection burden estimates made previously. In fact, they are expected to reduce the required paperwork by providing the opportunity for delays for some sources and exemptions for others from requirements to obtain a title V permit.

E. Unfunded Mandates Reform Act

Today's action imposes no costs on State, local, and Tribal governments. The EPA has determined that today's action does not contain a Federal mandate that may result in expenditures of $100 million or more for State, local, and Tribal governments, in the aggregate, or the private sector, in any 1 year. Therefore, the Agency concludes that it is not required by section 202 of the Unfunded Mandates Reform Act of 1995 to provide a written statement to accompany this regulatory action.

F. Submission to Congress and the General Accounting Office

The Congressional Review Act, 5 U.S.C. 801 *et seq.*, as added by the Small Business Regulatory Enforcement Fairness Act of 1996, generally provides that before a rule may take effect, the agency promulgating the rule must submit a rule report, which includes a copy of the rule, to each House of the Congress and to the Comptroller General of the United States. The EPA will submit a report containing this rule and other required information to the U.S. Senate, the U.S. House of Representatives, and the Comptroller General of the United States prior to publication of the rule in the **Federal Register**. This rule is not a "major rule" as defined by 5 U.S.C. 804(2).

G. Executive Order 13045

The E.O. 13045, "Protection of Children from Environmental Health Risks and Safety Risks" (62 FR 19885, April 23, 1977), applies to any rule that: (1) is determined to be "economically significant" as defined under E.O. 12866, and (2) concerns an environmental health or safety risk that EPA has reason to believe may have a disproportionate effect on children. If the regulatory action meets both criteria, the Agency must evaluate the environmental health or safety effects of the planned rule on children, and explain why the planned regulation is preferable to other potentially effective and reasonably feasible alternatives considered by the Agency.

We interpret E.O. 13045 as applying only to those regulatory actions that are based on health or safety risks, such that the analysis required under section 5-501 of the Order has the potential to influence the regulation. This final rule is not subject to E.O. 13045 because: (1) it is not an economically significant rule as defined by E.O. 12866, and (2) it does not establish an environmental standard intended to mitigate health or safety risks.

H. Executive Order 12875: Enhancing Intergovernmental Partnership

Under E.O. 12875, EPA may not issue a regulation that is not required by statute and that creates a mandate unless the Federal government provides the funds necessary to pay the direct compliance costs incurred by those governments or EPA consults with those governments. If EPA complies by consulting, E.O. 12875 requires EPA to provide to OMB a description of the extent of EPA's prior consultation with representatives of affected State, local, and Tribal governments, the nature of their concerns, any written communications from the governments, and a statement supporting the need to issue the regulation. In addition, E.O. 12875 requires EPA to develop an effective process permitting elected officials and other representatives of State, local and Tribal governments "to provide meaningful and timely input in the development of regulatory proposals containing significant unfunded mandates."

The EPA has concluded that this rule will not create a mandate upon any State, local, or Tribal governments.

I. Executive Order 13084: Consultation and Coordination with Indian Tribal Governments

Under E.O. 13084, EPA may not issue a regulation that is not required by statute, that significantly or uniquely affects the communities of Indian Tribal governments, and that imposes substantial direct compliance costs on those communities, unless the Federal government provides the funds necessary to pay the direct compliance costs incurred by the Tribal governments or EPA consults with those governments. If EPA complies by consulting, E.O. 13084 requires EPA to provide to the Office of Management and Budget, in a separately identified section of the preamble to the rule, a description of the extent of EPA's prior consultation with representatives of affected tribal governments, a summary of the nature of their concerns, and a statement supporting the need to issue the regulation. In addition, E.O. 13084 requires EPA to develop an effective process permitting elected and other representatives of Indian tribal governments "to provide meaningful and timely input in the development of regulatory policies on matters that significantly or uniquely affect their communities."

Today's rule does not significantly or uniquely affect the communities of Indian Tribal governments. It does not result in any expenditure of Tribal government revenue or have any impact on Tribal governments. The rule applies to all nonmajor sources for which EPA is the permitting authority, regardless of whether they are located in Indian country. Accordingly, the requirements of section 3(b) of E.O. 13084 do not apply to this rule.

J. National Technology Transfer and Advancement Act

Section 12(d) of the National Technology Transfer and Advancement Act of 1995 (NTTAA) directs all Federal agencies to use voluntary consensus standards instead of government-unique standards in their regulatory activities unless to do so would be inconsistent with applicable law or otherwise impractical. Voluntary consensus standards are technical standards (e.g., material specifications, test methods, sampling and analytical procedures, business practices, etc.) that are developed or adopted by one or more voluntary consensus standards bodies. Examples of organizations generally regarded as voluntary consensus standards bodies include the American Society for Testing and Materials, the National Fire Protection Association, and the Society of Automotive Engineers. The NTTAA requires Federal agencies like EPA to provide Congress, through OMB, with explanations when an agency decides not to use available and applicable voluntary consensus standards.

This action does not involve any new technical standards or the incorporation by reference of existing technical standards. Therefore, consideration of voluntary consensus standards is not relevant to this action.

List of Subjects in 40 CFR Part 63

Environmental protection, Air pollution control, Hazardous substances, Operating permits.

Dated: July 6, 1999.

Carol M. Browner,

Administrator.

For the reasons set out in the preamble, title 40 chapter I of the Code of Federal Regulations is amended as set forth below.

Part 63—[AMENDED]

1. The authority citation for part 63 continues to read as follows:

Authority: 42 U.S.C. 7401 *et seq.*

Subpart T—[Amended]

2. Section 63.468 is amended by revising paragraph (j) to read as follows:

§ 63.468 Reporting requirements.

* * * * *

(j) The Administrator has determined, pursuant to the criteria under section 502(a) of the Act, that an owner or operator of any batch cold solvent cleaning machine that is not itself a major source and that is not located at a major source, as defined under 40 CFR 70.2 or 71.2, whichever is applicable, is exempt from title V permitting requirements for that source. An owner or operator of any other solvent cleaning machine subject to the provisions of this subpart is subject to title V permitting requirements. These sources, if not major or located at major sources as defined under 40 CFR 70.2 or 71.2, whichever is applicable, may be deferred by the applicable title V permitting authority from title V permitting requirements for 5 years after the effective date of the first part 70 program approved by EPA (i.e., until December 9, 1999). All sources receiving deferrals shall submit title V permit applications within 12 months of such date (by December 9, 2000). All sources receiving deferrals still must meet the compliance schedule as stated in § 63.460.

* * * * *

[FR Doc. 99-17628 Filed 7-12-99; 8:45 am]

BILLING CODE 6560-50-U

ENVIRONMENTAL PROTECTION AGENCY

40 CFR Part 80

[FRL-6375-1]

RIN 2060-AG76

Regulation of Fuels and Fuel Additives: Corrections to Standards and Requirements for Reformulated and Conventional Gasoline

AGENCY: Environmental Protection Agency (EPA).

ACTION: Correcting amendments.

SUMMARY: Through the 1990 amendments to the Clean Air Act (CAA), Congress required EPA to publish rules requiring that gasoline sold in certain areas be reformulated to reduce vehicle emissions of toxic and ozone-forming compounds. EPA published rules for the certification and enforcement of reformulated gasoline (RFG) and provisions for non-reformulated or conventional gasoline on February 16, 1994.

In a final rule published on December 31, 1997, EPA took final action on several revisions to the RFG/conventional gasoline regulations. However, the December 31, 1997 final rule included two clerical errors. One of these errors involved an incorrect designation in the amendatory language published in the **Federal Register**, which resulted in the inadvertent deletion of certain regulatory text when the regulation was published in the Code of Federal Regulations (CFR) on July 1, 1998. The other was a typographical error in a revised chart for Phase II Complex Model Averaged Standards for RFG. The correct text for both appears in earlier editions of the CFR. This action corrects these errors in the current CFR. This action does not make any substantive changes to the RFG/conventional gasoline regulations.

DATES: This action will be effective on July 27, 1999.

ADDRESSES: Materials relevant to the final rule establishing standards for reformulated gasoline and anti-dumping standards for conventional gasoline are contained in Public Dockets A-92-01, A-92-12, and A-97-03 and are incorporated by reference. These materials are available for review at EPA's Air Docket Section, Waterside Mall (Room M-1500), 401 M Street, S.W., Washington, D.C. 20460.

FOR FURTHER INFORMATION CONTACT: Marilyn Bennett, Fuels and Energy Division, U.S. EPA, 401 M Street, S.W. (6406J), Washington, D.C. 20460. Telephone: (202) 564-8989.

SUPPLEMENTARY INFORMATION:

Regulated Entities

Regulated categories and entities affected by this action include:

Category	NAICS [1]	SIC Codes [2]	Examples of regulated entities
Industry	324110	2911	Refiners, importers, and distributors of motor vehicle fuel; motor vehicle fuel retail outlets and wholesale purchaser-consumer facilities.

[1] North American Industry Classification System (NAICS).
[2] Standard Industrial Classification (SIC) System Code.

ENVIRONMENTAL PROTECTION AGENCY

40 CFR Part 63

[FRL–6377–5]

RIN 2060–AH96

National Emission Standards for Hazardous Air Pollutants for Source Categories: Off-Site Waste and Recovery Operations

AGENCY: Environmental Protection Agency (EPA).

ACTION: Direct final rule; amendments to rule.

SUMMARY: The EPA is taking direct final action on amendments to the national emission standards for hazardous air pollutants (NESHAP) for off-site waste and recovery operations (OSWRO) that the EPA promulgated on July 1, 1996, under authority of section 112 of the Clean Air Act (CAA). The rule applies to owners and operators of facilities that are major sources of hazardous air pollutants (HAP) and manage certain wastes, used oil, or used solvents received from off-site locations. The EPA is amending specific provisions in the rule to resolve issues and questions raised after promulgation of the final rule. In addition, the EPA is amending other rule language to correct technical omissions; to make specific requirements consistent and up-to-date with recent decisions made by the Agency for other related air rules; and to correct typographical, printing, and grammatical errors. The amendments do not significantly change the EPA's original projections for the rule's environmental benefits, compliance costs, burden on industry, or the number of affected facilities.

DATES: Effective Date. This rule is effective on September 20, 1999 without further notice, unless the EPA receives adverse comment by August 19, 1999. If we receive such comment, we will publish a timely withdrawal in the **Federal Register** informing the public that the rule will not take effect.

ADDRESSES: Comments. Interested parties having adverse comments on this action may submit these comments in writing (in duplicate, if possible) to Docket No. A–92–16 at the following address: Air and Radiation Docket and Information Center (6102), U.S. Environmental Protection Agency, 401 M Street, SW, Room 1500, Washington, DC 20460. The EPA requests that a separate copy of the comments also be sent to the contact person listed below. The docket is located at the above address in Room M–1500, Waterside mall (ground floor).

Today's document and other materials related to this direct final rulemaking are available for review in the docket. Copies of this information may be obtained by request from the Air Docket by calling (202) 260–7548. A reasonable fee may be charged for copying docket materials.

FOR FURTHER INFORMATION CONTACT: Ms. Elaine Manning, Waste and Chemical Processes Group, Emission Standards Division (MD–13), U.S. Environmental Protection Agency, Research Triangle Park, NC, 27711, telephone number (919) 541–5499, facsimile number (919) 541–0246, electronic mail address "manning.elaine@epa.gov".

SUPPLEMENTARY INFORMATION:

Regulated Entities

Entities potentially regulated by this action include the following types of facilities if the facility receives "off-site material" as defined in the rule, and the facility is determined to be a major source of HAP emissions as defined in 40 CFR 63.2.

Category	Examples of regulated entities
Industry	Businesses that receive waste, used oil, or used solvent from off-site locations and manage this material in any of the following waste management or recovery operations: hazardous waste treatment, storage, and disposal facilities (TSDF); hazardous wastewater treatment operations exempted from air emission control requirements in 40 CFR part 264 or 265; nonhazardous wastewater treatment facilities other than publicly-owned treatment works; used solvent recovery operations; recovery operations that recycle or reprocess hazardous waste and are exempted from regulation as a TSDF in 40 CFR part 264 or 265; and used oil re-refineries.
Federal Government	Federal agency facilities that operate any of the waste management or recovery operations that meet the description of the entities listed under the "Industry" category in this table.

This table is not intended to be exhaustive, but rather provides a guide for readers regarding entities likely to be regulated by this action. This table lists the types of entities that the EPA is now aware could potentially be regulated by this action.

A comprehensive list of Standard Industrial Classification (SIC) codes cannot be compiled for businesses potentially regulated by this action due to the structure of the rule. The rule may be applicable to any business that receives waste, used oil, or used solvent from an off-site location and then manages this material in one of the operations or processes specified in the rule. Thus, for many businesses subject to the rule, the regulated sources (i.e., off-site waste management or recovery operations) are only a small part of the overall manufacturing process or service conducted at the facility. In these cases, the SIC code indicates the primary product produced or service provided at the facility rather than the presence of an off-site waste management or recovery operation at the site which is operated to support the predominate function of the facility. For example, SIC code classifications likely to have off-site waste management or recovery operations at some (but not all) facilities include, but are not limited to, petroleum refineries (SIC code 2911), industrial organic chemical manufacturing (SIC code 286x), plastic materials and synthetics manufacturing (SIC code 282x), and miscellaneous chemical products manufacturing (SIC code 289x). However, the EPA also is aware of off-site waste management or recovery operations potentially subject to the rule being located at a few facilities listed under SIC codes for refuse systems, waste management, business services, miscellaneous services, and nonclassifiable. Thus, the SIC code alone for a given facility does not determine whether the facility is or is not potentially subject to this rule.

To determine whether your facility is regulated by the action, you should carefully examine the applicability criteria in § 63.680 under 40 CFR part 63, subpart DD. If you have questions regarding the applicability of this action to a particular entity, consult the person listed in the preceding **FOR FURTHER INFORMATION CONTACT** section of this document.

Internet

The text of today's document is also available on the EPA's web site on the Internet under recently signed rules at the following address: http://

www.epa.gov/ttn/oarpg/rules.html. The EPA's Office of Air and Radiation (OAR) homepage on the Internet also contains a wide range of information on the air toxics program and many other air pollution programs and issues. The OAR's homepage address is: http://www.epa.gov/oar/.

Electronic Access and Filing Addresses

The official record for this rulemaking, as well as the public version, has been established for this rulemaking under Docket No. A-92-16 (including comments and data submitted electronically). A public version of this record, including printed, paper versions of electronic comments, which does not include any information claimed as confidential business information (CBI), is available for inspection from 8 a.m. to 5:30 p.m., Monday through Friday, excluding legal holidays. The official rulemaking record is located at the address listed in the **ADDRESSES** section at the beginning of this document.

Interested parties having adverse comments on this action may submit those comments electronically to the EPA's Air and Radiation Docket and Information Center at: "A-and-R-Docket@epa.gov." Electronic comments must be submitted as an ASCII file avoiding the use of special characters and any form of encryption. Comments and data will also be accepted on disks in WordPerfect in 6.1 file format or ASCII file format. All comments and data in electronic form must be identified by the docket number (A-92-16). No CBI should be submitted through electronic mail. Electronic comments may be filed online at many Federal Depository Libraries.

Judicial Review

Under section 307(b)(1) of the CAA, judicial review of an NESHAP is available only by filing a petition for review in the U.S. Court of Appeals for the District of Columbia Circuit within 60 days of today's publication of this final rule. Under section 307(b)(2) of the CAA, the requirements that are the subject of today's document may not be challenged later in civil or criminal proceedings brought by the EPA to enforce these requirements.

Outline

The information in this document is organized as follows.

I. Statutory Authority
II. Background
III. Amendments to Subpart DD—National Emission Standards for Off-Site Waste and Recovery Operations
A. Applicability
B. Definitions
C. Standards: General
D. Standards: Off-Site Material Treatment
E. Standards: Tanks
F. Standards: Process Vents
G. Standards: Closed-Vent Systems and Control Devices
H. Testing Methods and Procedures
I. Inspection and Monitoring Requirements
J. Notification and Reporting Requirements
K. HAP List for Subpart DD
IV. Amendments to Subpart OO—National Emission Standards for Tanks—Level 1
A. Definitions
B. Standards—Tank Fixed Roof
C. Test Methods and Procedures
D. Inspection and Monitoring Requirements
V. Amendments to Subpart PP—National Emission Standards for Containers
A. Definitions
B. Test Methods and Procedures
C. Inspection and Monitoring Requirements
VI. Amendments to Subpart QQ—National Emission Standards for Surface Impoundments
A. Definitions
B. Test Methods and Procedures
C. Inspection and Monitoring Requirements
VII. Amendments to Subpart RR—National Emission Standards for Individual Drain Systems
VIII. Amendments to Subpart VV—National Emission Standards for Oil-Water Separators and Organic-Water Separators
A. Definitions
B. Standards—Pressurized Separator
C. Test Methods and Procedures
D. Inspection and Monitoring Requirements
IX. Administrative Requirements
A. Docket
B. Executive Order 12866: Regulatory Planning and Review
C. Executive Order 12875: Enhancing the Intergovernmental Partnerships
D. Executive Order 13045: Protection of Children from Environmental Health Risks and Safety Risks
E. Executive Order 13084: Consultation and Coordination with Indian Tribal Governments
F. Unfunded Mandates Reform Act
G. Regulatory Flexibility Act
H. Paperwork Reduction Act
I. Submission to Congress and the General Accounting Office
J. National Technology Transfer and Advancement Act

I. Statutory Authority

The statutory authority for this action is provided by sections 101, 112, 114, 116, and 301 of the CAA, as amended (42 U.S.C. 7401 *et seq.*).

II. Background

The EPA, under 40 CFR part 63, subpart DD promulgated National Emission Standards for Hazardous Air Pollutants from Off-Site Waste and Recovery Operations (hereinafter referred to as the "OSWRO NESHAP") on July 1, 1996 (see 61 FR 34140). The OSWRO NESHAP establishes standards to control HAP emissions from certain waste management and recovery operations that are not subject to Federal air standards under other subparts in 40 CFR parts 61 or 63. Subpart DD specifies the rule's applicability, standards for affected sources, compliance requirements, and reporting and recordkeeping provisions. In addition, subpart DD cross-references other subparts in 40 CFR part 63 for the specific air emissions control requirements to be used for affected tanks, surface impoundments, containers, individual drain systems, and oil-water and organic-water separators. The cross-referenced subparts are Subpart OO—National Emission Standards for Tanks—Level 1, Subpart PP—National Emission Standards for Containers, Subpart QQ—National Emission Standards for Surface Impoundments, Subpart RR—National Emission Standards for Individual Drain Systems, and Subpart VV—National Emission Standards for Oil-Water Separators and Organic-Water Separators.

Since the promulgation of the OSWRO NESHAP, the EPA has received many inquiries asking for the Agency's interpretation of specific provisions of the rule. In addition, the Chemical Manufacturers Association (CMA), the Environmental Technology Council (ETC), and the Hazardous Waste Management Association (HWMA) petitioned for judicial review of the final rule, as provided for in CAA section 307(b), with respect to certain provisions regarding rule applicability, definitions, process vent standards, test methods, and inspection and monitoring requirements.

To resolve issues and questions raised after promulgation of the final rule, the EPA decided that technical amendments to subparts DD, OO, PP, QQ, RR, and VV in 40 CFR part 63 are appropriate and to use a direct final rulemaking action to promulgate these amendments. Also, as part of this action, the EPA is amending other rule language to correct technical omissions; to make specific requirements consistent and up-to-date with recent EPA decisions made for other related air rules; and to correct terminology, typographical, printing, and grammatical errors. The amendments do not significantly change the EPA's original projections for the rule's compliance costs, environmental benefits, burden on industry, or the number of affected facilities.

The EPA is publishing these amendments to subparts DD, OO, PP, QQ, RR, and VV in 40 CFR part 63 without prior proposal, because we

view the amendments to be noncontroversial and anticipate no adverse comment. The amendments do not change the substantive requirements of the rule. However, in the "Proposed Rules" section of today's **Federal Register** publication, we are publishing a separate document that will serve as the proposal of the identical amendments to these subparts if adverse comments are filed. The amendments will be effective 60 days from today's date without further notice, unless we receive adverse comment by the date specified in the **DATES** section at the beginning of this document. If the EPA receives adverse comment on these amendments, we will publish a timely withdrawal in the **Federal Register** informing the public that the amendments will not take effect. We will address the comments in a subsequent final rule based on the proposed rule. We will not institute a second comment period for these amendments. Any parties interested in commenting on the amendments must do so at this time (see **ADDRESSES** section at the beginning of this document).

III. Amendments to Subpart DD—National Emission Standards for Off-Site Waste and Recovery Operations

The EPA is amending 40 CFR part 63, subpart DD, to clarify the Agency's intent for applying and implementing specific rule requirements and to correct unintentional omissions and editorial errors. Also, we are amending the OSWRO NESHAP to make the applicable provisions of the rule consistent (to the extent permissible and practicable under the CAA) with a related set of air standards for hazardous waste treatment, storage, and disposal facilities (TSDF) established under the Resource Conservation Recovery Act (RCRA) in 40 CFR part 264, subpart CC and 40 CFR part 265, subpart CC. A summary of amendments to 40 CFR part 63, subpart DD, and the rationale for the amendments is presented below.

A. Applicability

The EPA is amending § 63.680 to clarify which types of materials received at a plant site are "off-site materials" and to clarify the designation of the affected sources at a plant site subject to the rule as discussed below. In addition, the EPA is extending the compliance date by 7 months to February 1, 2000. We believe this is appropriate to allow affected sources time to comply with today's amended rule.

1. "Off-Site Material"

The OSWRO NESHAP applies to those plant sites that are a "major source" as defined in 40 CFR 63.2 and receive "off-site material" as specified in subpart DD. For implementing the OSWRO NESHAP, a material is an "off-site material" if the material meets all three of the criteria specified in § 63.680(b)(1). To clarify that a given material must meet all three criteria to be considered an "off-site material," the wording in § 63.680(b)(1)(ii) and (b)(1)(iii) is revised by replacing the word "material" with the phrase "waste, used oil, or used solvent."

Section 63.680(b)(2) lists specific categories of wastes that are not considered "off-site material" regardless if the waste contains HAP or is received from an off-site location. The rule language is amended to clarify the compliance liability of an owner or operator potentially subject to the OSWRO NESHAP but receiving a waste that is exempted from the rule because it is already complying with air emission control requirements under the National Emission Standards for Benzene Waste Operations (40 CFR part 61, subpart FF) or the National Emission Standards for Organic Hazardous Air Pollutants from the Synthetic Organic Chemical Manufacturing Industry under 40 CFR part 63 (the HON). Section 63.680(b)(2)(v) is revised to clarify that a waste is not an "off-site material" under the OSWRO NESHAP when it is transferred from a chemical manufacturing plant or other facility subject to the HON provisions for wastewater under 40 CFR part 63, subpart G (i.e., § 63.132 through 63.147), and the owner or operator of the facility from which the waste is transferred complies with the HON provisions in § 63.132(g). Similarly, § 63.680(b)(2)(vi) is revised to clarify that a waste is not an "off-site material" under the OSWRO NESHAP when it is transferred from a chemical manufacturing plant, petroleum refinery, or coke by-product recovery plant subject to 40 CFR part 61, subpart FF, and the owner or operator of the facility from which the waste is transferred complies with the provisions of § 61.342(f) of the Benzene Waste Operations NESHAP.

Finally, the list of wastes not considered off-site material under the OSWRO NESHAP is amended by adding another waste category under § 63.680(b)(2)(viii). This category is RCRA hazardous waste stored for 10 days or less at a transfer facility and in compliance with the provisions for hazardous waste transporters in 40 CFR part 263. When the EPA was developing the OSWRO NESHAP, the Agency did not intend that subpart DD be applicable to those waste management operations that serve to consolidate multiple, small hazardous waste shipments into a single, larger load which then can be more efficiently delivered to the final destination for the waste. For example, a hazardous waste transporter may use a fleet of trucks to pickup small shipments of hazardous waste from many different waste generators; deliver these shipments to an interim transfer facility where the small shipments are unloaded; store the waste in the shipping containers at the transporter's facility for a short period (10 days or less); and then, when a sufficient quantity of waste has been collected, consolidate the containers as a single load on another truck or railcar for shipment of the waste to the facility where the waste is to be treated or disposed.

2. Designation of Affected Sources

Section 63.680(c) is revised to clarify for a plant site subject to the OSWRO NESHAP which processes, units, and equipment are designated as affected sources under the rule. These amendments are format and editorial revisions that do not substantively change the affected sources regulated under the rule, but are made to clarify the EPA's intent and improve ease of implementing these affected source designations.

First, the designation of "off-site material management units" in § 63.680(c)(1) is revised to clarify that a given tank or container cannot be subject to both the air standards for off-site material management units (as applicable to the particular type of unit) and for process vents. Language is added to clarify that if a tank or container is equipped with a vent that serves as a process vent for one of the six treatment processes specified in the rule, then the unit is not part of the "off-site material management unit" affected source. Instead, the unit (i.e., the process vent on this unit) is subject to the standards for process vents in § 63.683(c). The standards for off-site material management units in § 63.683(b) do not apply to the unit. An example of such a case is the vent on a distillate receiver vessel serving a distillation column used for reprocessing used solvent. Although the distillate receiver vessel meets the definition for a "tank" in the rule, it is not regulated as a tank under § 63.683(b), but instead the vessel is considered part of the "process vent" affected source.

Second, the designation of "process vents" in § 63.680(c)(2) is revised to explicitly state the six types of treatment processes vented to the atmosphere that are considered "process vent" affected sources under the OSWRO NESHAP. The EPA intended the air standards for process vents under the OSWRO NESHAP to apply to the same types of processes that the Agency regulates under related RCRA air rules for process vents in 40 CFR part 264, subpart AA, and 40 CFR part 265, subpart AA. These processes are distillation processes, fractionation processes, thin-film evaporation processes, solvent extraction processes, steam stripping processes, and air stripping. The revision to § 63.680(c)(2) includes detailed descriptions for each of the six treatment process types. The description included for each type of process is consistent with the definition used by the EPA for the process under the RCRA air rules in 40 CFR part 264, subpart AA, and 40 CFR part 265, subpart AA.

Finally, the criteria designating which equipment components are subject to the equipment leak standards under the OSWRO NESHAP are moved from § 63.683(b)(3) to § 63.680(c)(3). This is a format and editorial revision to facilitate ease of understanding and implementing the rule and does not change the criteria used to designate which equipment components are subject to the leak standards under the rule.

B. Definitions

The amendments revise several existing rule definitions and add two new definitions to § 63.681. These definition changes are made in support of other amendments that the EPA has made to subpart DD to resolve applicability issues and to clarify the intent of certain standards under the rule.

The definition for a "used solvent" as used in § 63.680(b) to determine which types of materials received at a plant site are "off-site materials" is revised to mean a mixture of aliphatic hydrocarbons or a mixture of one and two ring aromatic hydrocarbons used as a solvent which because of such use is contaminated by physical or chemical impurities. This wording revision is made to clarify that only solvents considered under the rule to be an "off-site material" are those spent or otherwise contaminated solvents resulting from use by a consumer (e.g., solvents used for cleaning, degreasing, paint stripping, etc.) and subsequently returned to a facility for recycling or reprocessing.

The "process vent" definition is revised to be consistent with revisions made to § 63.680(c)(2) designating the "process vent" affected sources under the OSWRO NESHAP (see section III.A.2 of this document). Additional wording is also added to the definition for a "process vent" to clarify that for the purpose of implementing the OSWRO NESHAP, a process vent is neither a vent used as a safety device (as defined in the rule) nor an open-ended line or other vent that is subject to the rule's equipment leak control requirements in § 63.691.

A new definition is added for the term "off-site material service" for use in the revisions made to § 63.680(c)(3) designating the equipment leak affected sources under the OSWRO NESHAP (see section III.A.2 of this document). "Off-site material service" means any time when a pump, compressor, agitator, pressure relief device, sampling connection system, open-ended valve or line, valve, connector, or instrumentation system contains or contacts off-site material.

The definition for "HAP" or "hazardous air pollutants" as used throughout subpart DD is clarified. The definition is revised to mean the specific organic chemical compounds, isomers, and mixtures listed in Table 1 of subpart DD. The definition for "volatile organic hazardous air pollutant concentration" (also referred to as "VOHAP concentration") is revised to clarify that the VOHAP concentration of an off-site material by definition is measured using Method 305 in 40 CFR part 63, appendix A. However, as an alternative to using Method 305, an owner or operator may determine the HAP concentration of an off-site material using any one of the alternative test methods specified in § 63.694(b)(2)(ii). When one of these alternative test methods is used to determine the speciated HAP concentration of an off-site material, the individual compound concentration may be adjusted by the corresponding f_{m305} value listed in Table 1 of subpart DD to determine an equivalent VOHAP concentration.

The definition for "point-of-treatment" is revised to clarify procedures for demonstrating compliance with the off-site material treatment standards in § 63.684. "Point-of-treatment" is revised to mean the point after the treated material exits the treatment process but before the first point downstream of the process where the organic constituents in the treated material have the potential to volatilize and be released to the atmosphere. For applying this definition to the rule, the first point downstream of the treatment process exit is not a fugitive emission point due to an equipment leak from any of the following equipment components: pumps, compressors, valves, connectors, instrumentation systems, or safety devices.

Several definition amendments are made to clarify the requirements for air emission control equipment under § 63.693. The definition for a "control device" is revised to clarify that a control device means equipment used for recovering, removing, oxidizing, or destroying organic vapors. The definition for a "cover" is revised to clarify that a cover must provide a continuous barrier over the off-site material, and that each cover opening (e.g., access hatches, sampling ports) must be in the closed position when the opening is not in use. A new definition is added to the rule for the term "flow indicator" in conjunction with amendments to the closed-vent system standards in § 63.693(c) (see section III.G.1 of this document). A "flow indicator" means a device that indicates whether gas is flowing, or whether the valve position would allow gas to flow in a bypass line.

Finally, the definition for a "safety device" is amended to mean a closure device (e.g., a pressure relief valve, frangible disc, fusible plug) which functions to prevent physical damage or permanent deformation to equipment by venting gases or vapors from the equipment during unsafe conditions resulting from an unplanned, accidental, or emergency event. The EPA has made this revision to the wording of the definition to provide owner and operator flexibility in the use and location of these necessary devices. Wording changes clarify that a safety device may be used on not just the air pollution control equipment operated to comply with the rule but also on the controlled source's process and ancillary equipment. Also, instead of venting a safety device directly to the atmosphere when emergency relief is necessary, a common practice at some facilities is to vent the safety device directly to equipment designed specifically and solely to contain or control the vented gases and vapors. The EPA made a second wording change to clarify that the EPA did not intend to preclude from the control equipment operating conditions allowed under the rule, the opening of a safety device when used with additional safety equipment.

C. Standards: General

Several revisions are made to the exemptions from air standards allowed

under the OSWRO NESHAP for "off-site material management unit" and "process vent" affected sources. These amendments do not significantly change the HAP emission reductions and the implementation costs expected for the rule. Also, the format and organization used for the section is revised to improve the ease of understanding and applying the standards. The requirements and exemptions are grouped together by affected source type. For example, all of the requirements and exemptions applicable to off-site material management units are now found in § 63.683(b).

1. Off-Site Material Management Unit Exemptions

Amendments are made to two of the exemptions for off-site material management units in § 63.683(b). First, the exemption in § 63.683(b)(2)(iii) for a tank or surface impoundment used for a biological treatment process is revised to eliminate a redundant qualification condition. As originally published, to qualify for this exemption the OSWRO NESHAP required an owner or operator to demonstrate that the biological treatment process achieves two conditions: (1) an overall HAP reduction efficiency of 95 percent or more, and (2) a HAP biodegradation efficiency of 95 percent or more. Upon review of this requirement, the EPA concluded that demonstrating a HAP biodegradation efficiency of 95 percent or more also means that the process achieves an overall HAP reduction efficiency of at least 95 percent. Consequently, requiring an owner or operator electing to qualify for this exemption to perform the determination of overall HAP reduction efficiency is unnecessary. Therefore, § 63.683(b)(2)(iii) is amended by deleting the requirement to demonstrate that the process achieves a HAP reduction efficiency greater than or equal to 95 percent.

The exemption in § 63.683(b)(2)(iv) for an off-site material management unit in which RCRA hazardous waste is managed according to the applicable conditions specified by the RCRA Land Disposal Restrictions (LDR) in 40 CFR part 268, is amended. This provision is revised to clarify application of the exemption to those situations when the off-site material is a type of hazardous waste not prohibited from land disposal or is composed of a mixture of different hazardous wastes. The EPA previously addressed this question in amendments to related RCRA air rules in 40 CFR part 264, subpart CC and 40 CFR part 265, subpart CC (see 62 FR 64636, December 8, 1997). The preamble to these amendments provides a detailed discussion of this provision, how it interacts with the RCRA LDR, and how the EPA interprets the application of this exemption in specific situations (see 62 FR 64643). The EPA is amending § 63.683(b)(2)(iv) by adopting the same rule language used for the provision in the RCRA air rules.

2. Process Vent Exemptions

Amendments for process vents in § 63.683(c) add new provisions to exempt certain vents that are part of a "process vent" affected source from the air rule standards. Three specific exemptions for process vents are provided in the amended rule. These exemptions do not significantly change the level of HAP emission reduction achieved under the OSWRO NESHAP for process vents.

The first exemption is added to be consistent with an exemption already provided in the rule for off-site material management units. A process vent is exempted from the air emission control requirements of the OSWRO NESHAP if the HAP emissions from the vent are already being controlled in compliance with the provisions specified in another subpart in 40 CFR part 61 or 40 CFR part 63.

The EPA is also adding exemptions for certain process vent streams with low flow, low HAP concentration characteristics, in response to comments received after promulgation of the rule, regarding the technical difficulty and high cost of controlling these process vent streams to achieve standards under the OSWRO NESHAP. The EPA acknowledges that, under certain circumstances, it may be technically difficult and costly to control a low flow, low HAP concentration vent stream to a level that achieves the standard for process vents specified in the rule (i.e., removal or destruction of the HAP from each individual affected process vent gas stream by 95 percent or more on a mass basis). For example, use of a thermal vapor incinerator to control a low flow, low organic HAP concentration vent stream may only achieve a 95 percent emission reduction by incurring the substantially higher equipment and operating costs required to overcome the technical limitations of enclosed combustion control devices. Other conventional air emission control devices commonly used at existing OSWRO sources (e.g., carbon adsorbers, condensers, catalytic vapor incinerators) also have technological constraints relative to controlling low flow, low concentration vent streams. Consequently, the level of potential HAP emission reduction that can be achieved for the low flow, low organic HAP concentration vent streams typically emitted from processes regulated by the OSWRO NESHAP is limited, in practical terms, by the technical limitations of conventional air pollution control devices and the costs to overcome these limitations.

The EPA reconsidered the potential HAP emission reduction levels achievable when conventional air emission control devices are applied to low flow, low organic HAP concentration vent streams from OSWRO processes. The EPA decided that it is reasonable and appropriate to exempt from the air emission control requirements under the OSWRO NESHAP those process vent streams for which the potential for HAP emission reduction is small and the application of conventional air emission control devices is not practical.

To exempt very low flow rate vent streams, the EPA selected an approach consistent with the approach the Agency has used for other NESHAP to exempt these types of process vent streams. A process vent is exempted from the air emission control requirements of the OSWRO NESHAP if the owner or operator determines the process vent stream flow rate to be less than 0.005 standard cubic meters per minute. Considering the range of the vent stream organic HAP concentrations typically emitted from the types of processes regulated by the OSWRO NESHAP, the potential HAP emission reductions achieved by controlling process vent streams below this flow rate cutoff value are extremely low regardless of the organic HAP concentration level.

The EPA decided that it is not appropriate to exempt OSWRO process vent streams with flow rates greater than 0.005 standard cubic meters per minute independent of considering the organic HAP concentration of the vent stream. Even though a given process vent stream has a low organic HAP concentration, the level of total organic HAP emissions to the atmosphere can still be substantial if the gas stream volume emitted is moderately high. Considering the organic HAP concentration of process vent streams for OSWRO sources, the EPA concluded that requiring control of those process vent streams having both a flow rate below 6.0 standard cubic meters per minute and a total organic HAP concentration less than 20 parts per million by volume (ppmv) does not provide sufficient HAP emission reductions from these sources to justify the substantial compliance costs for the OSWRO facility owner and operator. Therefore, the EPA is

amending the OSWRO NESHAP to exempt those affected process vent streams having a flow rate less than 6.0 standard cubic meters per minute and a total HAP concentration in the vent stream less than 20 ppmv. This process vent exemption requires that both the process vent flow rate and the organic HAP concentration criteria be met to qualify for the exemption.

D. Standards: Off-Site Material Treatment

Use of air emission controls for an affected off-site material management unit or process vent is not required under the OSWRO NESHAP if the HAP contained in the off-site material is removed or destroyed before placing the material in the affected unit. To comply with this provision, the rule provides alternative treatment standards in § 63.684. Revisions are made to several of the alternative treatment standards allowed under the rule. These amendments do not significantly change the HAP emission reductions and the implementation costs expected for the rule.

Some facility owners and operators misinterpreted the VOHAP concentration treatment alternative under § 63.684(b)(1)(ii), as published in the July 1996 version of the rule, to apply only to off-site material streams with a VOHAP concentration less than 500 parts per million by weight (ppmw), and that the EPA was requiring treatment of these low HAP streams contrary to the general standards stated in § 63.683. This is not the EPA's intent, and the rule language is amended to clarify that this alternative is used for the situation where the off-site material entering a treatment process is composed of a mixture of off-site material streams having an average VOHAP concentration greater than 500 ppmw with off-site material streams having an average VOHAP concentration less than 500 ppmw.

The HAP efficiency treatment alternative in § 63.684(b)(3) is amended to clarify that this treatment alternative is not applicable to a biological degradation process conducted in open tanks or surface impoundments (for open biodegradation processes an owner or operator may comply with § 63.684(b)(4)). Demonstrating an overall HAP reduction efficiency for a treatment process that is open to the atmosphere does not ensure that the HAP in the off-site material is actually destroyed or removed. A portion or all of the volatile organic HAP constituents present when the off-site material enters the process may volatilize directly to the atmosphere from the exposed surface of the material in an open tank or surface impoundment before this material finally exits the process.

Also in § 63.684(b)(3), a correction is made to the value of the HAP removal efficiency performance level required in circumstances where the off-site material stream entering the treatment process has an average VOHAP concentration equal to or greater than 10,000 ppmw at the point-of-delivery. The value for HAP removal efficiency performance level is corrected to read 99 percent (not 95 percent as published in July 1996). A treatment process can only meet the second condition of the standard that requires the average VOHAP concentration of the off-site material at the point-of-treatment to be less than 100 ppmw by achieving a HAP removal efficiency of at least 99 percent.

The biodegradation treatment alternative in § 63.684(b)(4) is amended to clarify that this alternative applies only to a biological degradation treatment process conducted in open tanks or surface impoundments. Also, consistent with the amendment made by the EPA to the exemption in § 63.683(b)(2)(iii) for a tank or surface impoundment used for biological treatment (see section III.B.1 of this document), § 63.684(b)(4)(i) is revised to eliminate the redundant condition requiring determination of the overall HAP reduction efficiency for the biodegradation process.

Provisions are added in § 63.684(e)(4) requiring the owner or operator to establish and implement a procedure to monitor appropriate parameters that demonstrate proper operation of a biological treatment unit according to the evaluation required in § 63.694(h). Under this requirement, the owner or operator must list the operating parameters monitored and state the frequency of monitoring to ensure that the biological treatment unit is operating between the minimum and maximum operating parameter values to establish that the unit is continuously achieving the relevant performance requirement.

E. Standards: Tanks

The standards for a tank required under § 63.685(b)(1) to use Tank Level 1 controls are amended to provide two alternatives for complying with the rule. First, an alternative is added to the rule (see § 63.685(c)(2)(ii)) to explicitly clarify that the owner or operator of the tank may instead choose to use the more stringent Tank Level 2 controls to comply with the rule. The EPA's intent is that an owner or operator may select a more stringent control level than the minimum control requirement. Second, an alternative is added to the rule (see § 63.685(c)(2)(iii)) for the special circumstance when a tank is used as an interim transfer point to transfer off-site material from containers to another off-site material management unit. An example of such a tank is an in-ground tank into which organic-contaminated debris is dumped from roll-off boxes or dump trucks, and then this debris is promptly transferred from the tank to a macroencapsulation unit by a backhoe. This alternative allows the cover to be removed during those periods of time when the material transfer activity is occurring. At all other times, air emissions from the tank must be controlled in accordance with the provisions specified in 40 CFR part 63, subpart OO—National Emission Standards for Tanks—Level 1. The EPA previously included provisions for these types of tanks in the related air rules for waste management units under the RCRA subpart CC air rules in 40 CFR parts 264 and 265 (see docket A-92-16, document VI-B-2).

The standards in § 63.685(b)(4) for a tank that manages off-site material having a maximum HAP vapor pressure that is equal to or greater than 76.6 kilopascals (kPa) are amended to provide two additional compliance alternatives. These additional compliance alternatives are using either (1) a pressure tank, or (2) a tank located inside an enclosure vented through a closed vent system to an enclosed combustion device. These two additional control alternatives provide a level of HAP emission control equivalent to the original control requirement (i.e., venting the tank directly to a control device), while at the same time providing greater compliance flexibility to the owners and operators subject to the rule.

The requirements in § 63.685(h) for owners and operators electing to use the Tank Level 2 control alternative of a pressure tank are amended to allow the purging of inert materials from the pressure tank. Inert material purging is a short duration maintenance procedure required by good engineering practice to ensure proper operation of this type of tank system.

The requirements in § 63.685(i) for owners and operators electing to use the Tank Level 2 control alternative of an enclosure vented to an enclosed combustion control device are amended to add a provision allowing a safety device to open anytime conditions require it to do so to avoid an unsafe condition. The EPA included this safety provision for all of the other tank control alternatives under the OSWRO NESHAP, but the provision

inadvertently was not included in the regulatory language for this Tank Level 2 control alternative when the final rule was published in July 1996.

F. Standards: Process Vents

The air emission control requirements for process vents in § 63.690(b) are amended to clarify that for the purpose of complying with this standard, the EPA considers a primary condenser associated with an affected process to be part of the process and not the air emission control device. The primary condenser is a condenser for which the predominant function is the recovery or capture of solvents or other organics for use, reuse, or sale. The EPA considers a secondary condenser or other organic recovery device that is operated downstream of the primary condenser to be a control device for the purpose of complying with the OSWRO NESHAP.

G. Standards: Closed-Vent Systems and Control Devices

Amendments to the standards for closed-vent systems and control devices in § 63.693 correct technical omissions, update specific requirements consistent with recent decisions made by the EPA for other NESHAP, and correct terminology, typographical, printing, and grammatical errors. These amendments do not significantly change the HAP emission reductions and implementation costs expected for the rule.

1. Closed-Vent System Requirements

The inspecting and monitoring requirements for a closed-vent system in § 63.693(b)(5) are amended to add an alternative procedure. This alternative allows an owner or operator to inspect and monitor the closed-vent system according to the procedure specified in 40 CFR part 63, subpart H—National Emission Standards for Organic Hazardous Air Pollutants for Equipment Leaks (specifically the procedure in § 63.172(f) through (h)). Although some details of the subpart H procedure vary from the procedure already specified in the OSWRO NESHAP, both procedures achieve the same overall result of ensuring that the closed-vent system continues to operate properly after its initial installation and testing. This amendment allows those owners and operators who are already inspecting and monitoring other closed-vent systems at their facility using the subpart H procedure to comply with another NESHAP allowing the flexibility to use a common procedure for all of the affected closed-vent systems at the facility.

Section 63.693(c) is amended to update the requirements for those situations when a closed-vent system bypass device is installed to be consistent with other recently promulgated NESHAP. The revised language does not significantly change the technical requirements but does clarify the requirements for an owner or operator choosing to use a flow indicator to comply with the provision. The rule requires that this device merely indicate the presence of gas flow through the bypass line or duct. The device does not need to measure or quantify the flow rate (although a flow measurement device can be used to comply with this provision of the rule if an owner or operator chooses to do so).

2. General Control Device Requirements

The requirements in § 63.693(b)(8) for using a design analysis to demonstrate that a given control device achieves the applicable performance requirements of the rule are amended. If the design analysis prepared by the owner or operator is determined by the Administrator to be incomplete or deficient, the amended rule allows the Administrator to first request that the design analysis be revised or amended by the owner or operator to correct the deficiencies identified by the Administrator. If the owner or operator and the Administrator still do not agree on the acceptability of using this revised design analysis to demonstrate that the control device achieves the applicable performance requirements, then the disagreement is to be resolved using the results of a performance test conducted by the owner or operator.

3. Carbon Adsorption System Requirements

The monitoring requirements in § 63.693(d)(3) for carbon adsorption control devices are amended to clarify the requirements. Section 63.693(d)(3)(i) is amended to clarify that owners and operators choosing this monitoring alternative for regenerative-type carbon adsorption systems must monitor both total regeneration stream mass flow and the carbon bed temperature. Section 63.693(d)(3)(ii) is amended to add a requirement that the daily average concentration level of organic compounds in the exhaust stream from the control device must be monitored. The EPA considers an averaging time to be necessary to properly determine compliance.

The spent carbon management requirements in § 63.693(d)(4) are amended to add two more alternatives. The amendments add the alternatives of using: (1) a thermal treatment unit using air emission controls according to the control device standards under the OSWRO NESHAP, or (2) a thermal treatment unit using organic air emission controls according to another NESHAP in 40 CFR part 61 or 40 CFR part 63. These changes make this requirement consistent with other air rules that affect similar waste management sources (see section 264.1088(c)(3)(ii) and section 265.1089(c)(3)(ii)).

4. Condenser Requirements

The monitoring requirements in § 63.693(e)(3) for condenser control devices are amended to clarify the requirements. Section 63.693(e)(3)(i) and (ii) are amended to require monitoring of either the daily average exhaust gas temperature or the daily average concentration level of organic compounds in the exhaust stream. The EPA considers monitoring one of these parameters to be necessary to properly determine compliance.

5. Vapor Incinerator Requirements

The monitoring requirements in § 63.693(f) for vapor incinerators are amended to add a requirement that owners and operators measure and record the daily average of the particular parameter being monitored (i.e., temperature or concentration). The EPA considers monitoring these parameters to be necessary to properly determine compliance.

6. Boiler and Process Heater Requirements

The monitoring requirements in § 63.693(g) for boilers and process heaters are amended to include provisions requiring that the monitoring systems for boilers and process heaters used as control devices measure and record the daily average of the particular parameter being monitored (i.e., temperature or concentration). The provision of a daily averaging time for control device monitoring parameters is necessary to properly determine compliance.

7. Flare Requirements

The requirements in § 63.693(h) for flares are amended to clarify the compliance demonstration and monitoring procedures to be used for a flare. Section 63.693(h)(2) is added to the rule to specify the procedure an owner or operator must use to demonstrate that the flare achieves the requirements in 40 CFR 63.11(b). This amendment is added because the cross-reference to the General Provisions in 40 CFR part 63, subpart A, as specified in

the version of the final rule published in July 1996, does not explain the specific flare compliance demonstration procedure that an owner or operator is to use for the OSWRO NESHAP.

The flare monitoring requirements are now specified in § 63.693(h)(3) and are amended to require that the owner or operator record for each 1-hour period whether the required pilot flame monitor was continuously operating and whether a flame was present during each hour as required. This change is made to add an averaging time.

H. Testing Methods and Procedures

1. Alternative Methods for Determination of Average VOHAP Concentration

The EPA is adding three more alternative methods in § 63.694(b)(ii) that an owner or operator may choose to determine the average HAP concentration of an off-site material. The methods added are Method 625 in 40 CFR part 136, appendix A, and Method 8260 and Method 8270 in "Test Methods for Evaluating Solid Waste, Physical/Chemical Methods," EPA Publication No. SW–846, Third Edition, September 1986, as amended by Update I, November 15, 1992 (or any more recent, updated version of these methods approved by the EPA). The EPA developed these methods for use in implementing rules under the Clean Water Act and RCRA, respectively. The methods measure the concentration of organic pollutants in municipal and industrial wastewaters. Commenters suggested that these methods are also applicable to the OSWRO NESHAP for the determination of off-site material HAP concentration. After review of the methods, the EPA decided that using the three methods for direct measurement of the HAP concentration of certain off-site material is reasonable and adding them to the OSWRO NESHAP is appropriate. The EPA believes that with the addition of these methods, the rule now provides a range of alternatives for determining the HAP concentration of an off-site material such that every owner and operator of facilities subject to the OSWRO NESHAP have available practical and inexpensive VOHAP determination alternatives.

It is important to note that for each of the alternative methods allowed under § 63.694(b)(ii) (i.e., the listed methods other than Methods 305 and 25D), there is a published list of chemical compounds that the EPA considers the method appropriate to measure. An owner or operator may only use an alternative method to measure compounds that are on the list associated with that method, unless the specified validation procedures are also performed. Furthermore, for a VOHAP concentration determination, the owner or operator must evaluate the total mass of HAP compounds in an off-site material (i.e., all compounds listed in Table 1 of subpart DD). Therefore, the owner or operator is responsible for determining that the analytical method used for a VOHAP concentration determination is sufficient to evaluate all of the applicable organic compounds contained in the off-site material. If an owner or operator chooses to use an alternative to Method 305 to analyze an off-site material that contains unknown compounds or many different compounds, performing "screening" analyses may first be necessary to verify that the alternative method chosen is, in fact, appropriate to evaluate all the necessary compounds.

The alternative test methods measure the total concentration of the HAP constituents listed in Table 1 of subpart DD. The VOHAP concentration of an off-site material by definition is the fraction by weight of those compounds listed in Table 1 as measured using Method 305. Owners and operators may choose to "correct" the HAP values measured by an alternative method to equate to the VOHAP values that would be measured using Method 305. This correction is made by multiplying the total concentration measured values times the appropriate "f_{m305} factor" listed in Table 1 of subpart DD to obtain the Method 305 VOHAP concentration equivalent.

Method 625 is appropriate for determining the HAP concentration of an off-site material provided that the corrections for the measured compounds in Table 7 of the method are made. Methods 8260 and 8270 are also considered appropriate provided that formal quality assurance procedures are established, followed, and recorded to address those elements of the methods considered relevant for measuring the actual concentration of organic compounds. The quality assurance program must address procedures to minimize the loss of compounds due to volatilization, biodegradation, reaction, or sorption during the sample collection, storage, and preparation steps, as well as addressing the overall accuracy and precision of the specific method used.

None of the alternative methods specify sample collection and handling procedures considered adequate by the EPA to minimize the volatilization of organics from the sample before analysis. Therefore, to ensure that a representative sample of an off-site material is analyzed, an owner or operator that chooses to use either Method 624, 625, 1624, 1625, 8260, or 8270 for the OSWRO NESHAP is required to develop and follow a written sampling plan. This plan describes a step-by-step procedure for collecting representative samples of the off-site materials such that material integrity is maintained and minimal loss of organics from the sample occurs throughout the collection and analysis process. An example of an acceptable sampling plan is one that incorporates sample collection and sample handling procedures similar to those specified in Method 25D. The sampling plan is to be maintained on-site in the facility records.

The provisions in § 63.694(c)(ii) listing the alternative methods for determining the average VOHAP concentration of an off-site material at the point-of-treatment are revised and simplified to cross-reference all of the methods allowed under § 63.694(b)(ii).

2. Equation Corrections

The equation in § 63.694(b)(2)(iii) used for calculating the average VOHAP concentration of an off-site material is amended to correct the rule citation used to define the term "C_i." The correct citation is § 63.694. The same correction is made for the terms "C_i" in the equation in § 63.694(c)(3), "y" and "C_y" in the equation in § 63.694(e)(4), and "Q_{bj}" and "C_{bi}" in the equation in § 63.694(g)(4).

The equation in § 63.694(c)(3) used for calculating the average VOHAP concentration on a mass-weighted basis is corrected to clarify the inputs to the equation. In the equation, the value for Q_t is the sum of the Q_i's used in the equation. This value represents the sum or total off-site material quantity used to characterize the off-site material over the averaging period. Each VOHAP concentration determination must have a corresponding off-site material quantity that represents the amount of material generated or received over the averaging period used to determine the VOHAP concentration value. To calculate a mass-weighted average VOHAP concentration over the averaging period, multiply each VOHAP concentration by the quantity of material it represents and then divide by the total quantity of material (i.e., the sum of the individual off-site material quantities).

3. Procedure for Determination of No Detectable Emissions

Several amendments are made to the procedure for determination of no

detectable emissions in § 63.694(k). As discussed in the appropriate later sections of this document, the same changes are made to the procedure as specified in 40 CFR part 63, subparts OO, PP, QQ, and VV.

The procedure is amended to allow either methane or n-hexane to be used as the calibration gas for the detection instrument. It is the EPA's intent that the calibration procedure be consistent with the procedure as applied to related air rules (e.g., see the equipment leak test methods and procedures at sections 264.1063 and 265.1063). Therefore, the requirement for calibration gases in § 63.694(k)(4) is amended to provide the owner or operator the choice of using methane or n-hexane as allowed under these other rules.

Section 63.694(k)(6) is amended to allow an owner or operator the option of choosing to adjust or not adjust the detection instrument readings to account for the background organic concentration level. Frequently at a source, the maximum organic concentration value measured by the detection instrument is well below the organic concentration value that defines "no detectable emissions." In this case, requiring an ambient background correction is an unnecessary step. Thus, the EPA decided that it is reasonable and appropriate for the correction of the measured value for the ambient background level to be an option used at the owner's or operator's discretion. If an owner or operator chooses to adjust the instrument readings for the background level, the background level value must be determined according to the procedures in Method 21 of 40 CFR part 60, appendix A.

Finally, the procedure is amended to add provisions for determination of no detectable emissions from a seal used around a rotating shaft that passes through a cover opening. In this case, if the arithmetic difference between the maximum organic concentration indicated by the instrument and the background level is less than 10,000 ppmv, then the potential leak interface is determined to operate with no detectable organic emissions. This addition is made for consistency with other related EPA air rules regarding the determination of no detectable emissions.

4. Determination of Process Vent Stream Flow Rate and Total HAP Concentration

A new § 63.694(m) is added to subpart DD specifying the testing methods and procedures that an owner or operator must follow to determine a process vent stream flow rate and total organic HAP concentration. These new requirements are added to the rule to support the amendments to § 63.683(b) adding exemptions for process vents based on the vent stream flow rate and total organic HAP concentration (see section III.F of this document). The procedures and test methods added to the rule for these determinations are the EPA reference methods in appendix A of 40 CFR part 60 for measuring gas stream flow rates and organic concentrations.

I. Inspection and Monitoring Requirements

Section 63.695 is amended to consolidate the inspection and monitoring requirements under subpart DD in this section, update the control device monitoring requirements to be consistent with recent decisions made by the EPA for compliance assurance monitoring of sources subject to using air emission controls under a NESHAP, and to make minor technical modifications. The amendments do not significantly change the estimated inspection and monitoring costs for the rule.

The inspection requirements for covers, closed-vent systems, and transfer systems in § 63.695 are amended to make allowances for units or equipment that an owner or operator determines to be unsafe to inspect on an annual interval. The rule requires that the owner or operator perform an initial inspection of the control equipment used to comply with the rule, and follow-up inspections at least once per calendar year. A new paragraph under § 63.695(f) is added to the rule that provides that following the initial inspection of an air pollution control device, an owner or operator may perform subsequent inspections at intervals longer than 1 year when the owner or operator determines that performing the applicable inspection and monitoring procedures would expose a worker to dangerous, hazardous, or otherwise unsafe conditions. In such a case, the owner or operator is required to: (1) Prepare written documentation that explains the reasons why the equipment is unsafe to inspect or monitor on an annual basis; and (2) develop and implement a written plan and schedule to inspect and monitor the air pollution control equipment using the applicable procedures specified in this section during times when a worker can safely access the air pollution control equipment. The required inspections and monitoring must be performed as frequently as practicable but do not need to be performed more frequently than the periodic schedule that would otherwise be applicable to the air pollution control equipment under the provisions of the rule. For example, when the rule requires a cover to be inspected at least once per calendar year, inspection of a cover designated as "unsafe to inspect" need not be performed more frequently than once during a calendar year if during that year unscheduled process shutdowns or other unexpected events create multiple times when a worker could safely access the cover.

A provision is added to the inspection requirements in § 63.695(b)(1) for tanks and in § 63.695(d)(1) for transfer systems to clarify that in the case where a tank or transfer system is buried partially or entirely underground, inspection is required only for those portions of the equipment and those connections to the equipment (such as fill ports, access hatched, or gauge wells) that extend to or above the ground surface and can be opened to the atmosphere. It was not the EPA's intent that those portions of the tank or transfer system that are located below ground and, consequently, not easily accessible, be inspected annually. The EPA previously included this provision in other related air rules for waste management units (e.g., the RCRA subpart CC air rules in 40 CFR parts 264 and 265).

The control device monitoring requirements under the rule are revised and updated to be consistent with the EPA's application of compliance assurance monitoring to sources under a NESHAP. A new § 63.695(e) is added to consolidate the control device monitoring requirements. This section establishes the technical specifications for continuous monitoring of control device operating parameters; establishes the criteria for calculating the daily average value for each monitored operating parameter; incorporates a requirement that the owner or operator establish appropriate operating parameter limits for the range of conditions at which the control device must be operated to continuously achieve the applicable performance requirements; and defines the conditions under which an excursion for a given control device is determined to have occurred based on the monitoring data results.

The EPA considers an excursion to be a failure to achieve the applicable standards due to improper operation of the control device. The rule allows one excused excursion for a control device per semiannual period for any reason. Should any additional excursions occur during this period (other than those that occur during the specific conditions listed in § 63.695(e)(6)(i)), each of these

additional excursions is a violation of the standard. Conditions under which an excursion of the operating parameter limit is not a violation of the standard are: (1) periods of startup, shutdown, and malfunction if during the period the affected unit or facility is operated according to the facility's startup, shutdown, and malfunction plan; and (2) periods of non-operation of the unit or process that is vented to the control device that result in cessation of HAP emissions to which the monitoring applies.

J. Notification and Reporting Requirements

The notification requirements in § 63.697(a) are amended to allow owners and operators of existing sources subject to the amended OSWRO NESHAP, to file an initial notification (as required in § 63.9(b)) on or before 30 days after the date that today's amendments become effective. This provision is added to the rule in recognition by the EPA that, as a result of the clarifying amendments made by today's direct final rulemaking, there may be some facility owners and operators who now understand, for the first time, that their facility is subject to the OSWRO NESHAP.

The reporting requirements in § 63.697(b)(4) are amended by adding language to clarify the type of information the owner or operator should include in the semiannual report regarding control device excursions. The semiannual report must include a description of all excursions, as defined in the subpart, that have occurred during the 6-month reporting period. This includes excursions caused when the daily average value of a monitored operating parameter is outside the established operating parameter limit as well as excursions caused by a lack of adequate monitoring data.

K. HAP List for Subpart DD

Table 1 in subpart DD lists the specific organic chemical compounds, isomers, and mixtures that are HAP for the purpose of implementing the requirements of OSWRO NESHAP. Two changes are made to this table. First, the listing for the compound, 1,1-dimethyl hydrazine, is deleted from Table 1. As discussed in the preamble for the final rule (see 61 FR 34140), 1,1-dimethyl hydrazine was one of the specific compounds that EPA decided to delete from its proposed HAP list for this rulemaking because of the low potential for the compound to be emitted from the type of waste management and recovery operations subject to the rule. This compound inadvertently was not deleted from the version of Table 1 published in July 1996.

Table 1 also is amended to clarify that for the glycol ethers chemical group listing in the table, only those glycol ethers that have a Henry's Law constant value equal to or greater than 0.1 Y/X (1.8×10^{-6} atm/gm-mole/m^3) at 25 °C must be included in the determination of the VOHAP concentration. The group of glycol ether chemicals contains a large number of compounds that have Henry's Law constant values both above and below this cutoff value. Therefore, rather than attempt to list the specific glycol ether compounds in the table and potentially omit a given glycol ether HAP, the criteria for identifying which glycol ether compounds must be included in the VOHAP determination was added to the rule.

IV. Amendments to Subpart OO—National Emission Standards for Tanks—Level 1

The EPA is amending 40 CFR part 63, subpart OO, to clarify several specific rule requirements, to correct minor typographical and terminology errors, and to make the provisions of subpart OO consistent with the technical amendments made to 40 CFR part 63, subpart DD, where applicable. The amendments to 40 CFR part 63, subpart OO, are summarized below.

A. Definitions

The definition for a "safety device" specified in § 63.901 is amended to incorporate the same changes made to the definition for a "safety device" for 40 CFR part 63, subpart DD, in § 63.681. These changes are discussed in section III.B of this document.

B. Standards—Tank Fixed Roof

The standards for fixed roof tanks in § 63.902 are amended with additional language to clarify the EPA's intent for compliance with two specific provisions. First, § 63.902(a) is amended to specifically state that the standards under this section do not apply to a fixed roof tank that is also equipped with an internal floating roof. Second, § 63.902(b) is amended with additional language to specifically state that a facility owner or operator is allowed to install a closure device on a tank manifold system or header vent when a series of tanks have their vents (i.e., tank openings) connected to a common header. This amendment makes EPA's application of the fixed roof standards to a tank connected to a manifold system consistent with other air rules that affect similar waste management sources (see 62 FR 64648, December 8, 1997).

C. Test Methods and Procedures

The procedure for determination of no detectable organic emissions specified in § 63.905 is amended to incorporate the same revisions and additions made to the procedure for 40 CFR part 63, subpart DD, in § 63.694(k). The specific amendments are discussed in section III.G of this document.

D. Inspection and Monitoring Requirements

The inspection and monitoring provisions for owners and operators that use a tank equipped with a fixed roof is amended by adding a new paragraph (d) to § 63.906 which allows alternative inspection intervals longer than 1 year when an owner or operator determines that performing a required inspection or monitoring procedures would expose a worker to dangerous, hazardous, or otherwise unsafe conditions. The alternative inspection interval provision is the same as that for 40 CFR part 63, subpart DD, in § 63.695(f). The alternative inspection interval provision and related compliance requirements are discussed in section III.I of this document.

V. Amendments to Subpart PP—National Emission Standards for Containers

The EPA is amending 40 CFR part 63, subpart PP, to clarify several definitions, to correct minor typographical and terminology errors, and to make the provisions of subpart PP consistent with the technical amendments made to 40 CFR part 63, subpart DD, where applicable. The amendments to 40 CFR part 63, subpart PP, are summarized below.

A. Definitions

Two of the definitions in § 63.921 are revised to clarify the EPA's intent in applying each definition to provisions in the rule. The definition for an "empty container" is revised to remove redundant language regarding a container that meets the definition of an "empty container" used for implementing RCRA hazardous waste rules (see 40 CFR 261.7(b)). The definition for a "safety device" is amended to incorporate the same revision made to the definition for a "safety device" for 40 CFR part 63, subpart DD, in § 63.681. This change is discussed in section III.B of this document.

B. Test Methods and Procedures

The procedure for determination of no detectable organic emissions specified in § 63.925 is amended to incorporate the same revisions and additions made

to the procedure for 40 CFR part 63, subpart DD, in § 63.694(k). The specific amendments are discussed in section III.G of this document.

C. Inspection and Monitoring Requirements

The EPA has received questions regarding the implementation of the inspection requirements for containers using either Container Level 1 or Container Level 2 controls as specified under the rule. The EPA is amending several provisions in § 63.926 to clarify which containers are required to be inspected and when these inspections need to be performed.

The regulatory language in § 63.926(a)(1) is amended to clarify when the initial inspection must be performed for a container that already contains a regulated material when it is delivered to a facility. A visual inspection is required when the owner or operator first accepts possession of the container at the facility site if the container is not emptied (i.e., does not meet the conditions for an "empty container" as defined in the rule) within 24 hours after the container has been accepted at the facility site.

For a container that is delivered to an affected facility containing a regulated material but is not emptied within the allowed 24-hour period, the container must be inspected according to the requirements of the rule by the calendar day on which the facility owner or operator accepts possession of the container. For the purpose of compliance with subpart PP, this date of acceptance is the date of signature by the facility owner or operator on the manifest or shipping papers accompanying the container. It is allowable under subpart PP to have a party other than the owner or operator of the affected facility perform the inspection prior to the acceptance date. For example, if an owner or operator of an affected facility accepts a shipment of containers that arrives at the facility on a truck, it is allowable under the rule to have the shipper or transporter perform the visual inspection of the individual containers before or during loading of the containers onto the truck for transport to the affected facility. In this case, the party performing the inspections (e.g., the container shipper or transporter) needs to provide the owner or operator of the recipient facility with written documentation to verify that the containers have been inspected in accordance with the requirements of § 63.926. Regardless of who performs the inspections, it is ultimately the responsibility of the owner or operator of the affected facility to ensure that the inspections have been performed in compliance with all of the applicable requirements under subpart PP.

Section 63.926(a)(2) is amended to clarify the conditions under which additional visual inspections must be conducted for those containers, using either Container Level 1 or Container Level 2 controls that remain at the facility for more than 1 year. When a container, filled or partially filled with regulated-material, remains unopened at the facility site for a period of 1 year or more, the container and its cover and closure devices must be visually inspected by the owner or operator initially, and thereafter, at least once every calendar year.

Section 63.926(a)(3) is amended to provide additional compliance alternatives to owners and operators for those situations when a defective container is found during an inspection. The rule is amended to allow the owner or operator the alternatives of either emptying the regulated-material from the defective container or repairing the defective container. If the owner or operator elects to empty the regulated material from the defective container, the owner or operator must empty the defective container (i.e., meet the conditions for an "empty container" as defined in the rule) and transfer the removed material to either: (1) a container that meets the applicable standards under subpart PP; or (2) to a tank, process, or treatment unit that meets the applicable standards under a NESHAP referencing subpart PP. The defective container must be emptied no later than 5 calendar days after detection of the defect. The emptied defective container must be either repaired, destroyed, or used for purposes other than management of regulated-material. If the owner or operator elects to repair the defective container, first efforts at repair of the defect must be made no later than 24 hours after detection, and repair must be completed as soon as possible but no later than 5 calendar days after detection. If repair of a defect cannot be completed within 5 calendar days, then the regulated-material must be emptied from the container and the container must not be used to manage regulated-material until the defect is repaired.

VI. Amendments to Subpart QQ—National Emission Standards for Surface Impoundments

The EPA is amending 40 CFR part 63, subpart QQ, to clarify several definitions, to correct minor typographical and terminology errors, and to make the provisions of subpart QQ consistent with the technical amendments made to 40 CFR part 63, subpart DD, where applicable. The amendments to 40 CFR part 63, subpart QQ, are summarized below.

A. Definitions

Two of the definitions in § 63.941 are revised to clarify the EPA's intent in applying the definitions. The definition for a "cover" is amended by adding examples of types of surface impoundment covers (e.g., a floating membrane cover placed on the surface of the material in the surface impoundment, an air-supported structure installed over the surface impoundment). The definition for a "safety device" is amended to incorporate the same change made to the definition for a "safety device" for 40 CFR part 63, subpart DD, in § 63.681. This change is discussed in section III.B of this document.

B. Test Methods and Procedures

The procedure for determination of no detectable organic emissions specified in § 63.945 is amended to incorporate the same revisions and additions made to the procedure for 40 CFR part 63, subpart DD, in § 63.694(k). The specific amendments are discussed in section III.G of this document.

C. Inspection and Monitoring Requirements

The inspection and monitoring provisions for air pollution control equipment are amended by adding a new paragraph (d) to § 63.946 which allows alternative inspection intervals longer than 1 year when an owner or operator determines that performing a required inspection or monitoring procedure would expose a worker to dangerous, hazardous, or otherwise unsafe conditions. The alternative inspection interval provision is the same as that for 40 CFR part 63, subpart DD, in § 63.695(f). The alternative inspection interval provision and related compliance requirements are discussed in section III.I of this document.

VII. Amendments to Subpart RR—National Emission Standards for Individual Drain Systems

The EPA is amending 40 CFR part 63, subpart RR, to clarify the EPA's intent with regard to the types of wastewater streams to which air emission controls must be applied in accordance with 40 CFR part 63, subpart RR. A definition for a "regulated-material" is added to § 63.961 to mean the wastewater streams, residuals, and any other materials specified by the referencing

subpart to be managed in accordance with the standards under subpart RR. The definition is needed to clarify the EPA's intent that this rule apply to waste streams and residuals in addition to wastewater. In conjunction with this change, a change is made throughout subpart RR to replace the word "wastewater" with the term "regulated material."

VIII. Amendments to Subpart VV—National Emission Standards for Oil-Water Separators and Organic-Water Separators

The EPA is amending 40 CFR part 63, subpart VV, to add a new air emission control alternative, to clarify several specific rule requirements, to correct minor typographical and terminology errors, and to make the provisions of subpart VV consistent with the technical amendments made to 40 CFR part 63, subpart DD, where applicable. The amendments to 40 CFR part 63, subpart VV, are summarized below.

A. Definitions

The definition for a "safety device" specified in § 63.1041 is amended to incorporate the same changes made to the definition for a "safety device" for 40 CFR part 63, subpart DD, in § 63.681. These changes are discussed in section III.B of this document.

B. Standards—Pressurized Separator

A new section, § 63.1045, is added to subpart VV which allows owners and operators to control air emissions from an oil-water or organic-water separator by using a pressurized separator that is operated as a closed-system. The provision requires that the pressurized separator be designed not to vent to the atmosphere as a result of compression of the vapor headspace during operation of the separator at its design capacity. All separator openings must be equipped with closure devices designed to operate with no detectable organic emissions as determined using the procedure specified in the subpart. Whenever a regulated-material is in the separator, the separator must be operated as a closed system that does not vent to the atmosphere except under emergency and maintenance conditions specified in the rule.

C. Test Methods and Procedures

The procedure for determination of no detectable organic emissions specified in § 63.1046(a) is amended to incorporate the same revisions and additions made to the procedure for 40 CFR part 63, subpart DD, in § 63.694(k). The specific amendments are discussed in section III.G of this document.

D. Inspection and Monitoring Requirements

The inspection and monitoring provisions for owners and operators that use a tank equipped with a fixed roof is amended by adding a new paragraph (e) to § 63.1047 which allows alternative inspection intervals longer than 1 year when an owner or operator determines that performing a required inspection or monitoring procedure would expose a worker to dangerous, hazardous, or otherwise unsafe conditions. This alternative inspection interval provision is the same as that for 40 CFR part 63, subpart DD, in § 63.695(f). The alternative inspection interval provision and related compliance requirements are discussed in section III.I of this document.

IX. Administrative Requirements

A. Docket

The docket is intended to be an organized and complete file of the administrative records compiled by the EPA in the development of this rulemaking. The docket is a dynamic file because material is added throughout the rulemaking development. The docketing system is intended to allow members of the public and industries involved to readily identify and locate documents so that they can effectively participate in the rulemaking process. Along with the proposed and promulgated standards and their preambles, the contents of the docket, except for certain interagency documents, will serve as the record for judicial review. (See CAA section 307(d)(7)(A).) The docket for this rulemaking containing the information considered by the EPA in development of the amendments is Docket No. A-92-16. This docket is available for public inspection between 8:00 a.m. and 5:30 p.m., Monday through Friday, except for Federal holidays, at the following address: U.S. Environmental Protection Agency, Air and Radiation Docket and Information Center (MC-6102), 401 M Street SW, Washington, DC 20460; telephone: (202) 260-7548. The docket is located at the above address in Room M-1500, Waterside Mall (ground floor). A reasonable fee may be charged for copying.

B. Executive Order 12866: Regulatory Planning and Review

Under Executive Order 12866 (58 FR 51735, October 4, 1993), the EPA must determine whether the regulatory action is "significant" and therefore subject to review by the Office of Management and Budget (OMB) and the requirements of the Executive Order. The Executive Order defines "significant regulatory action" as one that is likely to result in a rule that may:

(1) Have an annual effect on the economy of $100 million or more or adversely affect in a material way the economy, a sector of the economy, productivity, competition, jobs, the environment, public health or safety, or State, local, or tribal governments or communities;

(2) Create a serious inconsistency or otherwise interfere with an action taken or planned by another agency;

(3) Materially alter the budgetary impact of entitlements, grants, user fees, or loan programs, or the rights and obligation of recipients thereof; or

(4) Raise novel legal or policy issues arising out of legal mandates, the President's priorities, or the principles set forth in the Executive Order.

It has been determined that this action amending the OSWRO NESHAP is not a "significant regulatory action" under the terms of Executive Order 12866 and therefore not subject to OMB review.

C. Executive Order 12875: Enhancing the Intergovernmental Partnerships

Under Executive Order 12875, the EPA may not issue a regulation that is not required by statute and that creates a mandate upon a State, local or tribal government, unless the Federal government provides the funds necessary to pay the direct compliance costs incurred by those governments or the EPA consults with those governments. If the EPA complies by consulting, Executive Order 12875 requires the EPA to provide OMB a description of the extent of the EPA's prior consultation with representatives of affected State, local and tribal governments, the nature of their concerns, copies of any written communications from the governments, and a statement supporting the need to issue the regulation. In addition, Executive Order 12875 requires the EPA to develop an effective process permitting elected officials and other representatives of State, local and tribal governments "to provide meaningful and timely input in the development of regulatory proposals containing significant unfunded mandates."

The OSWRO NESHAP does not create a mandate on State, local, or tribal governments. The rule does not impose any enforceable duties on these entities, and State, local, and tribal governments are not directly impacted by this rule; i.e., they are not required to purchase control systems to meet the requirements of this rule. Accordingly, the requirements of section 1(a) of

Executive Order 12875 do not apply to this action.

D. Executive Order 13045: Protection of Children from Environmental Health Risks and Safety Risks

Executive Order 13045 (62 FR 19885, April 23, 1997) applies to any rule that (1) is determined to be "economically significant" as defined under Executive Order 12866, and (2) concerns an environmental health or safety risk that the EPA has reason to believe may have a disproportionate effect on children. If the regulatory action meets both criteria, the EPA must evaluate the environmental health or safety effects of the planned rule on children and explain why the planned regulation is preferable to other potentially effective and reasonably feasible alternatives considered by the Agency.

The EPA interprets Executive Order 13045 as applying only to those regulatory actions that are based on health or safety risks, such that the analyses required under section 5-501 of the Order has the potential to influence the regulation. These amendments to the OSWRO NESHAP are not subject to Executive Order 13045 because the OSWRO NESHAP is based on technology performance and not on health or safety risks. In addition, the amendments are not economically significant regulatory actions as defined by E.O. 12866.

E. Executive Order 13084: Consultations and Coordination with Indian Tribal Governments

Under Executive Order 13084, the EPA may not issue a regulation that is not required by statute, that significantly or uniquely affects the communities of Indian tribal governments, and that imposes substantial direct compliance costs on those communities, unless the Federal government provides the funds necessary to pay the direct compliance costs incurred by the tribal governments, or the EPA consults with those governments. If the EPA complies by consulting, Executive Order 13084 requires the EPA to provide to the OMB, in a separately identified section of the preamble to the rule, a description of the extent of the EPA's prior consultation with representatives of affected tribal governments, a summary of the nature of their concerns, and a statement supporting the need to issue the regulation. In addition, Executive Order 13084 requires the EPA to develop an effective process permitting elected officials and other representatives of Indian tribal governments "to provide meaningful and timely input in the development of regulatory policies on matters that significantly or uniquely affect their communities."

The OSWRO NESHAP does not significantly or uniquely affect the communities of Indian tribal governments. The rule does not impose any enforceable duties on tribal governments unless they own or operate a facility subject to the OSWRO NESHAP. Indian tribal governments which own or operate facilities subject to the OSWRO NESHAP would incur compliance costs; however, the EPA does not believe that there are many, if any, tribal governments which either own or operate such facilities. Accordingly, the requirements of section 3(b) of Executive Order 13084 do not apply to this rule.

F. Unfunded Mandates Reform Act

Title II of the Unfunded Mandates Reform Act of 1995 (UMRA), Public Law 104-4, establishes requirements for Federal agencies to assess the effects of their regulatory actions on State, local, and tribal governments and the private sector. Under section 202 of the UMRA, the EPA generally must prepare a written statement, including a cost-benefit analysis, for proposed and final rules with "Federal mandates" that may result in expenditures by State, local, and tribal governments, in the aggregate, or by the private sector, of $100 million or more in any 1 year. Before promulgating an EPA rule for which a written statement is needed, section 205 of the UMRA generally requires the EPA to identify and consider a reasonable number of regulatory alternatives and adopt the least costly, most cost-effective or least-burdensome alternative that achieves the objectives of the rule. The provisions of section 205 do not apply when they are inconsistent with applicable law. Moreover, section 205 allows the EPA to adopt an alternative other than the least costly, most cost-effective or least-burdensome alternative if the Administrator publishes with the final rule an explanation why that alternative was not adopted. Before the EPA establishes any regulatory requirements that may significantly or uniquely affect small governments, it must have developed under section 203 of the UMRA a small government agency plan. The plan must provide for notifying potentially affected small governments, enabling officials of affected small governments to have meaningful and timely input in the development of EPA regulatory proposals with significant Federal intergovernmental mandates, and informing, educating, and advising small governments on compliance with the regulatory requirements.

The amendments to the OSWRO NESHAP will likely reduce the costs of complying with the rule for many affected owners and operators. These amendments do not increase expenditures by State, local, and tribal governments or the private sector. Therefore, the EPA has not prepared a budgetary impact statement or specifically addressed the selection of the least costly, most cost-effective, or least burdensome alternatives because these amendments are estimated to result in the expenditure by State and local governments, in aggregate, or by the private sector of less than $100 million in any 1 year. Because small governments will not be affected by this rule, the EPA is not required to develop a plan with regard to small governments. Therefore, the requirements of the Unfunded Mandates Act do not apply to this action.

G. Regulatory Flexibility Act

The Regulatory Flexibility Act (RFA) generally requires an agency to conduct a regulatory flexibility analysis of any rule subject to notice and comment rulemaking requirements unless the agency certifies that the rule will not have a significant economic impact on a substantial number of small entities. Small entities include small businesses, small not-for-profit enterprises, and small governmental jurisdictions. The EPA determined that these amendments to the OSWRO NESHAP do not have a significant impact on a substantial number of small entities. The EPA has also determined that it is not necessary to prepare a regulatory flexibility analysis in connection with this action. These amendments will not result in increased impacts to small entities and will result in reduced impacts in all cases.

H. Paperwork Reduction Act

The information collection requirements of the previously promulgated NESHAP were submitted to and approved by the OMB. A copy of this Information Collection Request (ICR) document (OMB control number 1717.02) may be obtained from Sandy Farmer, OP Regulator Information Division; U.S. Environmental Protection Agency, 401 M Street, SW (mail code 2136), Washington, DC 20460, or by calling (202) 260-2740.

Today's amendments to the OSWRO NESHAP have no impact on the information collection burden estimates made previously. No additional certifications or filings were

promulgated. Therefore, the ICR has not been revised.

I. Submission to Congress and the Comptroller General

The Congressional Review Act, 5 U.S.C. 801 *et seq.*, as added by the Small Business Regulatory Enforcement Fairness Act of 1996, generally provides that before a rule may take effect, the agency promulgating the rule must submit a rule report, which includes a copy of the rule, to each house of Congress and to the Comptroller General of the United States. The EPA will submit a report containing this rule and other required information to the U.S. Senate, the U.S. House of Representatives, and the Comptroller General of the United States prior to publication of the rule in the **Federal Register**. These amendments are not a "major rule" as defined by 5 U.S.C. 804(2). These amendments will be effective July 20, 1999.

J. National Technology Transfer and Advancement Act

Section 12(d) of the National Technology Transfer and Advancement Act of 1995 (NTTAA), Public Law 104–113, section 12(d)(15 U.S.C. 272 note) directs the EPA to use voluntary consensus standards in its regulatory activities unless to do so would be inconsistent with applicable law or otherwise impractical. Voluntary consensus standards are technical standards (e.g., materials specifications, test methods, sampling procedures, business practices, etc.) that are developed or adopted by voluntary consensus standards bodies. Where available and potentially applicable voluntary consensus standards are not used by the EPA, the NTTAA requires the Agency to provide Congress, through OMB, an explanation of the reasons for not using such standards. This section summarizes the EPA's response to the requirements of the NTTAA for the test methods added to the OSWRO NESHAP as part of today's amendments.

The OSWRO NESHAP involves technical standards. The amendments to the OSWRO NESHAP include the addition of test methods and procedures necessary for the determination of compliance and enforcement of air standards under the rule. Today's amendments increase the number of alternative test methods available to an owner or operator to determine the VOHAP concentration of an off-site material and provide for the use of other methods (i.e., those specified in the rule) subject to EPA approval. The EPA has determined that the owner or operator of an affected source must use the specified EPA reference methods when needed. While the American Society of Testing and Materials and other organizations have published a number of test methods and procedures applicable to organic content and material specifications which could be used to determine the flow rate and organic concentration of a process vent stream, these methods are not applicable to determining the volume, concentration, and type of air emissions from the affected sources. The use of these voluntary consensus standards would, therefore, have been impractical.

List of Subjects in 40 CFR Part 63

Environmental protection, Air pollution control, Containers, Hazardous air pollutants, Incorporation by reference, Individual drain systems, Oil-water separators, Organic-water separators, Recycling, Reporting and recordkeeping requirements, Surface impoundments, Tanks, Used oil, Used solvent, Waste management.

Dated: July 7, 1999.

Carol W. Browner,

Administrator.

For the reasons set forth in the preamble, title 40, chapter I, part 63 of the Code of Federal Regulations is amended as follows:

PART 63—[AMENDED]

1. The authority citation for part 63 continues to read as follows:

Authority: 42 U.S.C. 7401, *et seq.*

Subpart DD—National Emission Standards for Hazardous Air Pollutants from Off-Site Waste and Recovery Operations

2. Section 63.680 is amended by adding paragraph (b)(2)(viii) and by revising paragraphs (a)(2)(v), (b)(1)(ii), (b)(1)(iii), (b)(2)(v), (b)(2)(vi), (c), (d), and (e) to read as follows:

§ 63.680 Applicability and designation of affected sources.

(a) * * *

(2) * * *

(v) A recovery operation that recycles or reprocesses used solvent which is an off-site material and the operation is not part of a chemical, petroleum, or other manufacturing process that is required to use air emission controls by another subpart of 40 CFR part 63 or 40 CFR part 61.

* * * * *

(b) * * *

(1) * * *

(ii) The waste, used oil, or used solvent is not produced or generated within the plant site, but the material is delivered, transferred, or otherwise moved to the plant site from a location outside the boundaries of the plant site; and (iii) The waste, used oil, or used solvent contains one or more of the hazardous air pollutants (HAP) listed in Table 1 of this subpart based on the composition of the material at the point-of-delivery, as defined in § 63.681 of this subpart.

(2) * * *

(v) Waste that is transferred from a chemical manufacturing plant or other facility for which both of the following conditions apply to the waste:

(A) The management of the waste at the facility is required either under part 63 subpart F—National Emission Standards for Organic Hazardous Air Pollutants from the Synthetic Organic Chemical Manufacturing Industry or under another subpart in 40 CFR part 63 to meet the air emission control standards for process wastewater specified in 40 CFR 63.132 through 63.147; and

(B) The owner or operator of the facility from which the waste is transferred has complied with the provisions of 40 CFR 63.132(g)(1)(ii) and (g)(2).

(vi) Waste that is transferred from a chemical manufacturing plant, petroleum refinery, or coke by-product recovery plant which is subject to 40 CFR part 61, subpart FF—National Emission Standards for Benzene Waste Operations, and for which both of the following conditions apply to the waste:

(A) The waste is generated at a facility that is not exempted under the provisions of 40 CFR 61.342(a) from meeting the air emission control standards of 40 CFR part 61, subpart FF; and

(B) The owner or operator of the facility from which the waste is transferred has complied with the provisions of 40 CFR 61.342(f)(2).

(vii) * * *

(viii) Hazardous waste that is stored for 10 days or less at a transfer facility in compliance with the provisions of 40 CFR 263.12.

(c) *Affected sources.* (1) *Off-site material management units.* For each operation specified in paragraphs (a)(2)(i) through (a)(2)(vi) of this section that is located at the plant site, the affected source is the entire group of off-site material management units associated with the operation. An off-site material management unit is a tank, container, surface impoundment, oil-water separator, organic-water separator, or transfer system used to manage off-site material. For the purpose of implementing the standards under this

subpart, a unit that meets the definition of a tank or container but also is equipped with a vent that serves as a process vent for any of the processes listed in paragraphs (c)(2)(i) through (c)(2)(vi) of this section is not an off-site material management unit but instead is a process vent and is to be included in the appropriate affected source group under paragraph (c)(2) of this section. Examples of such a unit may include, but are not limited to, a distillate receiver vessel, a primary condenser, a bottoms receiver vessel, a surge control tank, a separator tank, and a hot well.

(2) *Process vents.* For each operation specified in paragraphs (a)(2)(i) through (a)(2)(vi) of this section that is located at the plant site, the affected source is the entire group of process equipment associated with the process vents for the processes listed in paragraphs (c)(2)(i) through (c)(2)(vi) of this section.

(i) Distillation process used for the treatment, recycling, or recovery of off-site material. Distillation means a process, either batch or continuous, separating one or more off-site material feed streams into two or more exit streams having different component concentrations from those in the feed stream or streams. The separation is achieved by the redistribution of the components between the liquid and vapor phases as they approach equilibrium within the distillation unit.

(ii) Fractionation process used for the treatment, recycling, or recovery of off-site material. Fractionation means a liquid mixture separation process or method used to separate a mixture of several volatile components of different boiling points in successive stages, each stage removing from the mixture some proportion of one of the components.

(iii) Thin-film evaporation process used for the treatment, recycling, or recovery of off-site material. Thin-film evaporation means a liquid mixture separation process or method that uses a heating surface consisting of a large diameter tube that may be either straight or tapered, horizontal or vertical. Liquid is spread on the tube wall by a rotating assembly of blades that maintain a close clearance from the wall or actually ride on the film of liquid on the wall.

(iv) Solvent extraction process used for the treatment, recycling, or recovery of off-site material. Solvent extraction means a separation process or method in which a solid or a solution is contacted with a liquid solvent (the material and the solvent being relatively insoluble in each other) to preferentially dissolve and transfer one or more components into the solvent.

(v) Steam stripping process used for the treatment, recycling, or recovery of off-site material. Steam stripping means a liquid mixture separation process or method in which vaporization of the volatile components of a liquid mixture occurs by the introduction of steam directly into the process.

(vi) Gas stripping process used for the treatment, recycling, or recovery of off-site material. Gas stripping means a desorption process or method used to transfer one or more volatile components from a liquid mixture into a gas stream either with or without the application of heat to the liquid. Packed towers, spray towers, and bubble-cap, sieve, or valve-type plate towers are examples of the process configurations used for contacting the gas and a liquid.

(3) *Equipment leaks.* For each operation specified in paragraphs (a)(2)(i) through (a)(2)(vi) of this section that is located at the plant site, the affected source is the entire group of equipment components for which each component meets all of the conditions specified in paragraphs (c)(3)(i) through (c)(3)(iii) of this section. If any one of these conditions do not apply to an equipment component, then that component is not part of the affected source for equipment leaks.

(i) The equipment component is a pump, compressor, agitator, pressure relief device, sampling connection system, open-ended valve or line, valve, connector, or instrumentation system;

(ii) The equipment component contains or contacts off-site material having a total HAP concentration equal to or greater than 10 percent by weight; and

(iii) The equipment component is intended to operate for 300 hours or more during a calendar year in off-site material service, as defined in § 63.681 of this subpart.

(d) *Facility-wide exemption.* The owner or operator of affected sources subject to this subpart is exempted from the requirements of §§ 63.682 through 63.699 of this subpart in situations when the total annual quantity of the HAP that is contained in the off-site material received at the plant site is less than 1 megagram per year. For a plant site to be exempted under the provisions of this paragraph (d), the owner or operator must meet the requirements in paragraphs (d)(1) through (d)(3) of this section.

(1) The owner or operator must prepare an initial determination of the total annual HAP quantity in the off-site material received at the plant site. This determination is based on the total quantity of the HAP listed in Table 1 of this subpart as determined at the point-of-delivery for each off-site material stream.

(2) The owner or operator must prepare a new determination whenever the extent of changes to the quantity or composition of the off-site material received at the plant site could cause the total annual HAP quantity in the off-site material received at the plant site to exceed the limit of 1 megagram per year.

(3) The owner or operator must maintain documentation to support the owner's or operator's determination of the total annual HAP quantity in the off-site material received at the plant site. This documentation must include the basis and data used for determining the HAP content of the off-site material.

(e) *Compliance dates.* (1) *Existing sources.* The owner or operator of an affected source that commenced construction or reconstruction before October 13, 1994, must achieve compliance with the provisions of this subpart on or before the date specified in paragraph (e)(1)(i) or (e)(1)(ii) of this section as applicable to the affected source.

(i) For an affected source that commenced construction or reconstruction before October 13, 1994 and receives off-site material for the first time before February 1, 2000, the owner or operator of this affected source must achieve compliance with the provisions of the subpart on or before February 1, 2000 unless an extension has been granted by the Administrator as provided in 40 CFR 63.6(i).

(ii) For an affected source that commenced construction or reconstruction before October 13, 1994, but receives off-site material for the first time on or after February 1, 2000, the owner or operator of the affected source must achieve compliance with the provisions of this subpart upon the first date that the affected source begins to manage off-site material.

(2) *New sources.* The owner or operator of an affected source for which construction or reconstruction commences on or after October 13, 1994, must achieve compliance with the provisions of this subpart on or before July 1, 1996, or upon initial startup of operations, whichever date is later as provided in 40 CFR 63.6(b).

* * * * *

3. Section 63.681 is amended by adding in alphabetical order the definitions of "Flow indicator" and "Hazardous air pollutants," by removing the definition of "HAP," and by revising the definitions of "Control device," "Cover," "Point-of-treatment," "Process vent," "Safety device," "Used solvent," "Volatile organic hazardous air pollutant concentration," and "Waste stabilization process" to read as follows:

§ 63.681 Definitions.

* * * * *

Control device means equipment used for recovering, removing, oxidizing, or destroying organic vapors. Examples of such equipment include but are not limited to carbon adsorbers, condensers, vapor incinerators, flares, boilers, and process heaters.

Cover means a device or system that provides a continuous barrier over the material managed in a off-site material management unit to prevent or reduce air pollutant emissions to the atmosphere. A cover may have openings needed for operation, inspection, sampling, maintenance, and repair of the unit provided that each opening is closed when not in use (e.g., access hatches, sampling ports). A cover may be a separate piece of equipment which can be detached and removed from the unit or a *cover* may be formed by structural features permanently integrated into the design of the unit.

* * * * *

Flow indicator means a device that indicates whether gas is flowing, or whether the valve position would allow gas to flow in a bypass line.

* * * * *

Hazardous air pollutants or *HAP* means the specific organic chemical compounds, isomers, and mixtures listed in Table 1 of this subpart.

* * * * *

Off-site material service means any time when a pump, compressor, agitator, pressure relief device, sampling connection system, open-ended valve or line, valve, connector, or instrumentation system contains or contacts off-site material.

* * * * *

Point-of-treatment means a point after the treated material exits the treatment process but before the first point downstream of the treatment process exit where the organic constituents in the treated material have the potential to volatilize and be released to the atmosphere. For the purpose of applying this definition to this subpart, the first point downstream of the treatment process exit is not a fugitive emission point due to an equipment leak from any of the following equipment components: pumps, compressors, valves, connectors, instrumentation systems, or safety devices.

* * * * *

Process vent means an open-ended pipe, stack, or duct through which a gas stream containing HAP is continuously or intermittently discharged to the atmosphere from any of the processes listed in § 63.680(c)(2)(i) through (c)(2)(vi) of this section. For the purpose of this subpart, a process vent is none of the following: a pressure-relief vent or other vent that is used as a safety device (as defined in this section); an open-ended line or other vent that is subject to the equipment leak control requirements under § 63.691 of this subpart; or a stack or other vent that is used to exhaust combustion products from a boiler, furnace, process heater, incinerator, or other combustion device.

* * * * *

Safety device means a closure device such as a pressure relief valve, frangible disc, fusible plug, or any other type of device which functions to prevent physical damage or permanent deformation to equipment by venting gases or vapors during unsafe conditions resulting from an unplanned, accidental, or emergency event. For the purpose of this subpart, a safety device is not used for routine venting of gases or vapors from the vapor headspace underneath a cover such as during filling of the unit or to adjust the pressure in this vapor headspace in response to normal daily diurnal ambient temperature fluctuations. A safety device is designed to remain in a closed position during normal operations and open only when the internal pressure, or another relevant parameter, exceeds the device threshold setting applicable to the equipment as determined by the owner or operator based on manufacturer recommendations, applicable regulations, fire protection and prevention codes, standard engineering codes and practices, or other requirements for the safe handling of flammable, combustible, explosive, reactive, or hazardous materials.

* * * * *

Used solvent means a mixture of aliphatic hydrocarbons or a mixture of one and two ring aromatic hydrocarbons that has been used as a solvent and as a result of such use is contaminated by physical or chemical impurities.

* * * * *

Volatile organic hazardous air pollutant concentration or *VOHAP concentration* means the fraction by weight of those compounds listed in Table 1 of this subpart that are in an off-site material as measured using Method 305 in appendix A of this part and expressed in terms of parts per million (ppm). As an alternative to using Method 305, an owner or operator may determine the HAP concentration of an off-site material using any one of the other test methods specified in § 63.694(b)(2)(ii) of this subpart. When a test method specified in § 63.694(b)(2)(ii) of this subpart other than Method 305 is used to determine the speciated HAP concentration of an off-site material, the individual compound concentration may be adjusted by the corresponding f_{m305} value listed in Table 1 of this subpart to determine a VOHAP concentration.

* * * * *

Waste stabilization process means any physical or chemical process used to either reduce the mobility of hazardous constituents in a waste or eliminate free liquids as determined by Test Method 9095—Paint Filter Liquids Test in "Test Methods for Evaluating Solid Waste, Physical/Chemical Methods," EPA Publication No. SW-846, Third Edition, September 1986, as amended by Update I, November 15, 1992. (As an alternative, an owner or operator may use any more recent, updated version of Method 9095 approved by the EPA.) A waste stabilization process includes mixing the waste with binders or other materials and curing the resulting waste and binder mixture. Other synonymous terms used to refer to this process are "waste fixation" or "waste solidification." A waste stabilization process does not include the adding of absorbent materials to the surface of a waste, without mixing, agitation, or subsequent curing, to absorb free liquid.

4. Section 63.683 is revised to read as follows:

§ 63.683 Standards: General.

(a) The general standards under this section apply to owners and operators of affected sources as designated in § 63.680(c) of this subpart.

(b) *Off-site material management units.* (1) For each off-site material management unit that is part of an affected source, the owner or operator must meet the requirements in either paragraph (b)(1)(i), (b)(1)(ii), or (b)(1)(iii) of this section except for those off-site material management units exempted under paragraph (b)(2) of this section.

(i) The owner or operator controls air emissions from the off-site material management unit in accordance with the applicable standards specified in §§ 63.685 through 63.689 of this subpart.

(ii) The owner or operator removes or destroys HAP in the off-site material before placing the material in the off-site material management unit by treating the material in accordance with the standards specified in § 63.684 of this subpart.

(iii) The owner or operator determines before placing off-site material in the off-site material management unit that the average VOHAP concentration of the off-site material is less than 500 parts per million by weight (ppmw) at the

point-of-delivery. The owner or operator must perform an initial determination of the average VOHAP concentration of the off-site material using the procedures specified in § 63.694(b) of this subpart. This initial determination must be performed either before the first time any portion of the off-site material stream is placed in the unit or by the compliance date, whichever date is later. Thereafter, the owner or operator must review and update, as necessary, this determination at least once every calendar year following the date of the initial determination for the off-site material stream.

(2) An off-site material management unit is exempted from the requirements in paragraph (b)(1) of this section when the owner or operator meets one of the exemptions provided in paragraphs (b)(2)(i) through (b)(2)(iv) of this section as applicable to the unit.

(i) An off-site material management unit is exempted from the requirements in paragraph (b)(1) of this section if the off-site material management unit is also subject to another subpart under 40 CFR part 63 or 40 CFR part 61, and the owner or operator is controlling the HAP listed in Table 1 of this subpart that are emitted from the unit in compliance with the provisions specified in the other applicable subpart under part 61 or part 63.

(ii) At the discretion of the owner or operator, one or a combination of off-site material management units may be exempted from the requirements in paragraph (b)(1) of this section when these units meet the condition that the total annual quantity of HAP contained in the off-site material placed in the units exempted under this paragraph (b)(2)(ii) is less than 1 megagram per year. For the off-site material management units selected by the owner or operator to be exempted from the requirements in paragraph (b)(1) of this section, the owner or operator must meet the requirements in paragraphs (b)(2)(ii)(A) and (b)(2)(ii)(B) of this section. An owner or operator may change the off-site material management units selected to be exempted under this paragraph (b)(2)(ii) by preparing a new designation for the exempt-units as required by paragraph (b)(2)(ii)(A) of this section and performing a new determination as required by paragraph (b)(2)(ii)(B) of this section.

(A) The owner or operator must designate each of the off-site material management units selected by the owner or operator to be exempt under paragraph (b)(2)(ii) of this section by either submitting to the Administrator a written notification identifying the exempt-units or permanently marking the exempt-units at the plant site. If an owner or operator chooses to prepare and submit a written notification, this notification must include a site plan, process diagram, or other appropriate documentation identifying each of the exempt-units. If an owner or operator chooses to permanently mark the exempt-units, each exempt-unit must be marked in such a manner that it can be readily identified as an exempt-unit from the other off-site material management units located at the plant site.

(B) The owner or operator must prepare an initial determination of the total annual HAP quantity in the off-site material placed in the units exempted under this paragraph (b)(2)(ii). This determination is based on the total quantity of the HAP listed in Table 1 of this subpart as determined at the point where the off-site material is placed in each exempted unit. The owner or operator must perform a new determination whenever the extent of changes to the quantity or composition of the off-site material placed in the exempted units could cause the total annual HAP content in the off-site material to exceed 1 megagram per year. The owner or operator must maintain documentation to support the most recent determination of the total annual HAP quantity. This documentation must include the basis and data used for determining the HAP content of the off-site material.

(iii) A tank or surface impoundment is exempted from the requirements in paragraph (b)(1) of this section if the unit is used for a biological treatment process that meets the requirements in either paragraph (b)(2)(iii)(A) or (b)(2)(iii)(B) of this section and the owner or operator complies with the monitoring requirements in § 63.684(e)(4) of this subpart.

(A) The HAP biodegradation efficiency (R_{bio}) for the biological treatment process is equal to or greater than 95 percent. The HAP biodegradation efficiency (R_{bio}) shall be determined in accordance with the requirements of § 63.694(h) of this subpart.

(B) The total actual HAP mass removal rate (MR_{bio}) for the off-site material treated by the biological treatment process is equal to or greater than the required HAP mass removal rate (RMR) for the off-site material. The total actual HAP mass removal rate (MR_{bio}) must be determined in accordance with the requirements of § 63.694(i) of this subpart. The required HAP mass removal rate (RMR) must be determined in accordance with the requirements of § 63.694(e) of this subpart.

(iv) An off-site material management unit is exempted from the requirements in paragraph (b)(1) of this section if the off-site material placed in the unit is a hazardous waste that meets the conditions specified in either paragraph (b)(2)(iv)(A) or (b)(2)(iv)(B) of this section.

(A) The hazardous waste meets the numerical organic concentration limits, applicable to the hazardous waste, as specified in 40 CFR part 268—Land Disposal Restrictions, listed in the table, "Treatment Standards for Hazardous Waste" in 40 CFR 268.40.

(B) The organic hazardous constituents in the hazardous waste have been treated by the treatment technology established by the EPA for the hazardous waste in 40 CFR 268.42(a), or have been removed or destroyed by an equivalent method of treatment approved by the EPA under 40 CFR 268.42(b).

(v) A tank used for bulk feed of off-site material to a waste incinerator is exempted from the requirements specified in paragraph (b)(1) of this section if the tank meets all of the conditions specified in paragraphs (b)(2)(v)(A) through (b)(2)(v)(C) of this section.

(A) The tank is located inside an enclosure vented to a control device that is designed and operated in accordance with all applicable requirements specified under 40 CFR part 61, subpart FF—National Emission Standards for Benzene Waste Operations for a facility at which the total annual benzene quantity from the facility waste is equal to or greater than 10 megagrams per year;

(B) The enclosure and control device serving the tank were installed and began operation prior to July 1, 1996; and

(C) The enclosure is designed and operated in accordance with the criteria for a permanent total enclosure as specified in "Procedure T—Criteria for and Verification of a Permanent or Temporary Total Enclosure" under 40 CFR 52.741, appendix B. The enclosure may have permanent or temporary openings to allow worker access; passage of material into or out of the enclosure by conveyor, vehicles, or other mechanical or electrical equipment; or to direct air flow into the enclosure. The owner or operator must annually perform the verification procedure for the enclosure as specified in Section 5.0 to "Procedure T—Criteria for and Verification of a Permanent or Temporary Total Enclosure."

(c) *Process vents.* (1) For each process vent that is part of an affected source, the owner or operator must meet the requirements in either paragraph (c)(1)(i) or (c)(1)(ii) of this section except for those process vents exempted under paragraph (c)(2) of this section.

(i) The owner or operator controls air emissions from the process vent in accordance with the standards specified in § 63.690 of this subpart.

(ii) The owner or operator determines before placing off-site material in the process equipment associated with the process vent that the average VOHAP concentration of the off-site material is less than ppmw at the point-of-delivery. The owner or operator must perform an initial determination of the average VOHAP concentration of the off-site material using the procedures specified in § 63.694(b) of this subpart before any portion of the off-site material stream is placed in the unit. Thereafter, the owner or operator must review and update, as necessary, this determination at least once every calendar year following the date of the initial determination for the off-site material stream.

(2) A process vent is exempted from the requirements of paragraph (c)(1) of this section when the owner or operator meets one of the exemptions provided in paragraphs (c)(2)(i) through (c)(2)(iii) of this section.

(i) A process vent is exempted from the requirements in paragraph (c)(1) of this section if the process vent is also subject to another subpart under part 63 or 40 CFR part 61, and the owner or operator is controlling the HAP listed in Table 1 of this subpart that are emitted from the process vent in compliance with the provisions specified in the other applicable subpart under part 61 or part 63.

(ii) A process vent is exempted from the requirements specified in paragraph (c)(1) of this section if the owner or operator determines that the process vent stream flow rate is less than 0.005 cubic meters per minute (m^3/min) at standard conditions (as defined in 40 CFR 63.2). The process vent stream flow rate shall be determined in accordance with the procedures specified in § 63.694(m) of this subpart. Documentation must be prepared by the owner or operator and maintained at the plant site to support the determination of the process vent stream flow rate. This documentation must include identification of each process vent exempted under this paragraph and the test results used to determine the process vent stream flow rate.

(iii) A process vent is exempted from the requirements specified in paragraph (c)(1) of this section if the owner or operator determines that the process vent stream flow rate is less than 6.0 m^3/min at standard conditions (as defined in 40 CFR 63.2) and the total HAP concentration is less than 20 ppmv. The process vent stream flow rate and total HAP concentration shall be determined in accordance with the procedures specified in § 63.694(m) of this subpart. Documentation must be prepared by the owner or operator and maintained at the plant site to support the determination of the process vent stream flow rate and total HAP concentration. This documentation must include identification of each process vent exempted under this paragraph (c)(2)(iii) and the test results used to determine the process vent stream flow rate and total HAP concentration. The owner or operator must perform a new determination of the process vent stream flow rate and total HAP concentration when the extent of changes to operation of the unit on which the process vent is used could cause either the process vent stream flow rate to exceed the limit of 6.0 m^3/min or the total HAP concentration to exceed the limit of 20 ppmv.

(d) *Equipment leaks.* The owner or operator must control equipment leaks from each equipment component that is part of the affected source specified in § 63.680(c)(3) of this subpart by implementing leak detection and control measures in accordance with the standards specified in § 63.691 of this subpart.

5. Section 63.684 is amended by revising paragraphs (a), (b) introductory text, (b)(1)(ii), (b)(3) introductory text, (b)(4) introductory text, (b)(5), (d), (e), (f), and (g) to read as follows:

§ 63.684 Standards: Off-site material treatment.

(a) The provisions of this section apply to the treatment of off-site material to remove or destroy HAP for which § 63.683(b)(1)(ii) of this subpart references the requirements of this section for such treatment.

(b) The owner or operator shall remove or destroy the HAP contained in off-site material streams to be managed in the off-site material management unit in accordance with § 63.683(b)(1)(ii) of this subpart using a treatment process that continuously achieves, under normal operations, one or more of the performance levels specified in paragraphs (b)(1) through (b)(5) of this section (as applicable to the type of treatment process) for the range of off-site material stream compositions and quantities expected to be treated.

(1) * * *

(ii) In the case when off-site material streams entering the treatment process are a mixture of off-site material streams having an average VOHAP concentration equal to or greater than 500 ppmw at the point-of-delivery with off-site material streams having average VOHAP concentrations less than 500 ppmw at the point-of-delivery, then the VOHAP concentration of the off-site material must be reduced to a level at the point-of-treatment that meets the performance level specified in either paragraph (b)(1)(ii)(A) or (b)(1)(ii)(B) of this section.

* * * * *

(3) *HAP reduction efficiency.* For any treatment process except a treatment process that uses biological degradation and is performed in an open tank or surface impoundment, the treatment process must achieve the applicable performance level specified in either paragraph (b)(3)(i) or (b)(3)(ii) of this section.

* * * * *

(4) *Biological degradation performed in an open tank or surface impoundment.* A treatment process using biological degradation and performed in an open tank or surface impoundment must achieve the performance level specified in either paragraph (b)(4)(i) or (b)(4)(ii) of this section.

* * * * *

(5) *Incineration.* The treatment process must destroy the HAP contained in the off-site material stream using one of the combustion devices specified in paragraphs (b)(5)(i) through (b)(5)(iv) of this section.

(i) An incinerator for which the owner or operator has been issued a final permit under 40 CFR part 270, and the incinerator is designed and operated in accordance with the requirements of 40 CFR part 264, subpart O—Incinerators, or

(ii) An incinerator for which the owner or operator has certified compliance with the interim status requirements of 40 CFR part 265, subpart O—Incinerators.

(iii) A boiler or industrial furnace for which the owner or operator has been issued a final permit under 40 CFR part 270, and the combustion unit is designed and operated in accordance with the requirements of 40 CFR part 266, subpart H—Hazardous Waste Burned in Boilers and Industrial Furnaces.

(iv) A boiler or industrial furnace for which the owner or operator has certified compliance with the interim status requirements of 40 CFR part 266,

subpart H Hazardous Waste Burned in Boilers and Industrial Furnaces.

* * * * *

(d) When the owner or operator treats the off-site material to meet one of the performance levels specified in paragraphs (b)(1) through (b)(4) of this section, the owner or operator shall demonstrate that the treatment process achieves the selected performance level for the range of expected off-site material stream compositions expected to be treated. An initial demonstration shall be performed as soon as possible but no later than 30 days after first time an owner or operator begins using the treatment process to manage off-site material streams in accordance with the requirements of either § 63.683(b)(1)(ii) or § 63.683(b)(2)(ii) of this subpart as applicable to the affected off-site material management unit or process equipment. Thereafter, the owner or operator shall review and update, as necessary, this demonstration at least once every calendar year following the date of the initial demonstration.

(e) When the owner or operator treats the off-site material to meet one of the performance levels specified in paragraphs (b)(1) through (b)(4) of this section, the owner or operator shall ensure that the treatment process is achieving the applicable performance requirements by continuously monitoring the operation of the process when it is used to treat off-site material by complying with paragraphs (e)(1) through (e)(3) or, for biological treatment units, paragraph (e)(4) of this section:

(1) A continuous monitoring system shall be installed and operated for each treatment that measures operating parameters appropriate for the treatment process technology. This system shall include a continuous recorder that records the measured values of the selected operating parameters. The monitoring equipment shall be installed, calibrated, and maintained in accordance with the equipment manufacturer's specifications or other written procedures that provide reasonable assurance that the monitoring equipment is operating properly. The continuous recorder shall be a data recording device that records either an instantaneous data value at least once every 15 minutes or an average value for intervals of 15 minutes or less.

(2) For each monitored operating parameter, the owner or operator shall establish a minimum operating parameter value or a maximum operating parameter value, as appropriate, to define the range of conditions at which the treatment process must be operated to continuously achieve the applicable performance requirements of this section.

(3) When the treatment process is operating to treat off-site material, the owner or operator shall inspect the data recorded by the continuous monitoring system on a routine basis and operate the treatment process such that the actual value of each monitored operating parameter is greater than the minimum operating parameter value or less than the maximum operating parameter value, as appropriate, established for the treatment process.

(4) When the treatment process is a biological treatment process that is complying with paragraph (b)(4) of this section, the owner or operator must establish and implement a written procedure to monitor the appropriate parameters that demonstrate proper operation of the biological treatment unit in accordance with the evaluation required in § 63.694(h) of this subpart. The written procedure must list the operating parameters that will be monitored and state the frequency of monitoring to ensure that the biological treatment unit is operating between the minimum operating parameter values and maximum operating parameter values to establish that the biological treatment unit is continuously achieving the performance requirement.

(f) The owner or operator must maintain records for each treatment process in accordance with the requirements of § 63.696(a) of this subpart.

(g) The owner or operator must prepare and submit reports for each treatment process in accordance with the requirements of § 63.697(a) of this subpart.

* * * * *

6. Section 63.685 is amended by adding paragraph (i)(3) and by revising paragraphs (b), (c)(2), (f)(1)(ii)(A), (g)(2)(i)(B), (h)(2), (h)(3), and (i) introductory text to read as follows:

§ 63.685 Standards: Tanks.

* * * * *

(b) The owner or operator shall control air emissions from each tank subject to this section in accordance with the following applicable requirements:

(1) For a tank that is part of an existing affected source but the tank is not used to manage off-site material having a maximum HAP vapor pressure kilopascal (kPa) that is equal to or greater than 76.6 kPa nor is the tank used for a waste stabilization process as defined in § 63.681 of this subpart, the owner or operator shall determine whether the tank is required to use either Tank Level 1 controls or Tank Level 2 controls as specified for the tank by Table 3 of this subpart based on the off-site material maximum HAP vapor pressure and the tank's design capacity. The owner or operator shall control air emissions from a tank required by Table 3 to use Tank Level 1 controls in accordance with the requirements of paragraph (c) of this section. The owner or operator shall control air emissions from a tank required by Table 3 to use Tank Level 2 controls in accordance with the requirements of paragraph (d) of this section.

(2) For a tank that is part of a new affected source but the tank is not used to manage off-site material having a maximum HAP vapor pressure that is equal to or greater than 76.6 kPa nor is the tank used for a waste stabilization process as defined in § 63.681 of this subpart, the owner or operator shall determine whether the tank is required to use either Tank Level 1 controls or Tank Level 2 controls as specified for the tank by Table 4 of this subpart based on the off-site material maximum HAP vapor pressure and the tank's design capacity. The owner or operator shall control air emissions from a tank required by Table 4 to use Tank Level 1 controls in accordance with the requirements of paragraph (c) of this section. The owner or operator shall control air emissions from a tank required by Table 4 to use Tank Level 2 controls in accordance with the requirements of paragraph (d) of this section.

(3) For a tank that is used for a waste stabilization process, the owner or operator shall control air emissions from the tank by using Tank Level 2 controls in accordance with the requirements of paragraph (d) of this section.

(4) For a tank that manages off-site material having a maximum HAP vapor pressure that is equal to or greater than 76.6 kPa, the owner or operator must control air emissions by using one of the tanks specified in paragraphs (b)(4)(i) through (b)(4)(iii) of this section.

(i) A tank vented through a closed-vent system to a control device in accordance with the requirements specified in paragraph (g) of this section;

(ii) A pressure tank designed and operated in accordance with the requirements specified in paragraph (h) of this section; or

(iii) A tank located inside an enclosure that is vented through a closed-vent system to an enclosed combustion control device in accordance with the requirements specified in paragraph (i) of this section.

(c) * * *

(2) The owner or operator must control air emissions from the tank in accordance with the requirements in either paragraph (c)(2)(i), (c)(2)(ii), or (c)(2)(iii) of this section, as applicable to the tank.

(i) The owner or operator controls air emissions from the tank in accordance with the provisions specified in subpart 00 of 40 CFR part 63—National Emission Standards for Tanks—Level 1.

(ii) As an alternative to meeting the requirements in paragraph (c)(2)(i) of this section, an owner or operator may control air emissions from the tank in accordance with the provisions for Tank Level 2 controls as specified in paragraph (d) of this section.

(iii) As an alternative to meeting the requirements in paragraph (c)(2)(i) of this section when a tank is used as an interim transfer point to transfer off-site material from containers to another off-site material management unit, an owner or operator may control air emissions from the tank in accordance with the requirements in paragraphs (c)(2)(iii)(A) and (c)(2)(iii)(B) of this section. An example of such a tank is an in-ground tank into which organic-contaminated debris is dumped from roll-off boxes or dump trucks, and then this debris is promptly transferred from the tank to a macroencapsulation unit by a backhoe.

(A) During those periods of time when the material transfer activity is occurring, the tank may be operated without a cover.

(B) At all other times, air emissions from the tank must be controlled in accordance with the provisions specified in 40 CFR part 67, subpart 00—National Emission Standards for Tanks—Level 1.

* * * * *

(f) * * *

(1) * * *

(ii) * * *

(A) The primary seal shall be a liquid-mounted seal or a metallic shoe seal, as defined in § 63.681 of this subpart. The total area of the gaps between the tank wall and the primary seal shall not exceed 212 square centimeters (cm2) per meter of tank diameter, and the width of any portion of these gaps shall not exceed 3.8 centimeters (cm). If a metallic shoe seal is used for the primary seal, the metallic shoe seal shall be designed so that one end extends into the liquid in the tank and the other end extends a vertical distance of at least 61 centimeters (24 inches) above the liquid surface.

* * * * *

(g) * * *

(2) * * *

(i) * * *

(B) To remove accumulated sludge or other residues from the bottom of the tank.

* * * * *

(h) * * *

(2) All tank openings shall be equipped with closure devices designed to operate with no detectable organic emissions as determined using the procedure specified in § 63.694(k) of this subpart.

(3) Whenever an off-site material is in the tank, the tank shall be operated as a closed system that does not vent to the atmosphere except under either of the following conditions as specified in paragraph (h)(3)(i) or (h)(3)(ii) of this section.

(i) At those times when opening of a safety device, as defined in § 63.681 of this subpart, is required to avoid an unsafe condition.

(ii) At those times when purging of inerts from the tank is required and the purge stream is routed to a closed-vent system and control device designed and operated in accordance with the requirements of § 63.693 of this subpart.

(i) The owner or operator who elects to control air emissions by using an enclosure vented through a closed-vent system to an enclosed combustion control device shall meet the requirements specified in paragraphs (i)(1) through (i)(3) of this section.

* * * * *

(3) Opening of a safety device, as defined in § 63.681 of this subpart, is allowed at any time conditions require it to do so to avoid an unsafe condition.

7. Section 63.686 is amended by revising the paragraph (b) introductory text and adding paragraph (b)(3) to read as follows:

§ 63.686 Standards: Oil-water and organic-water separators.

* * * * *

(b) The owner or operator shall control air emissions from each separator subject to this section by using one of the following:

* * * * *

(3) A pressurized separator that operates as a closed system in accordance with all applicable provisions specified in 40 CFR part 63, subpart VV—National Emission Standards for Oil-Water Separators and Organic-Water Separators.

8. Section 63.687 is amended by revising the paragraph (b) introductory text to read as follows:

§ 63.687 Standards: Surface impoundments.

* * * * *

(b) The owner or operator shall control air emissions from each surface impoundment subject to this section by using one of the following:

* * * * *

9. Section 63.688 is amended by revising paragraphs (b) and (c) to read as follows:

§ 63.688 Standards: Containers.

* * * * *

(b) The owner or operator shall control air emissions from each container subject to this section in accordance with the following requirements, as applicable to the container, except when the special provisions for waste stabilization processes specified in paragraph (c) of this section apply to the container.

(1) For a container having a design capacity greater than 0.1 m^3 and less than or equal to 0.46 m^3, the owner or operator must control air emissions from the container in accordance with the requirements in either paragraph (b)(1)(i) or (b)(1)(ii) of this section.

(i) The owner or operator controls air emissions from the container in accordance with the standards for Container Level 1 controls as specified in 40 CFR part 63, subpart PP—National Emission Standards for Containers.

(ii) As an alternative to meeting the requirements in paragraph (b)(1)(i) of this section, an owner or operator may choose to control air emissions from the container in accordance with the standards for either Container Level 2 controls or Container Level 3 controls as specified in subpart PP of this part 63—National Emission Standards for Containers.

(2) For a container having a design capacity greater than 0.46 m^3 and the container is not in light-material service as defined in § 63.681 of this subpart, the owner or operator must control air emissions from the container in accordance with the requirements in either paragraph (b)(1)(i) or (b)(1)(ii) of this section.

(3) For a container having a design capacity greater than 0.46 m^3 and the container is in light-material service as defined in § 63.681 of this subpart, the owner or operator must control air emissions from the container in accordance with the requirements in either paragraph (b)(3)(i) or (b)(3)(ii) of this section.

(i) The owner or operator controls air emissions from the container in accordance with the standards for Container Level 2 controls as specified in 40 CFR part 63, subpart PP—National Emission Standards for Containers.

(ii) As an alternative to meeting the requirements in paragraph (b)(3)(i) of

this section, an owner or operator may choose to control air emissions from the container in accordance with the standards for Container Level 3 controls as specified in 40 CFR part 63, subpart PP—National Emission Standards for Containers.

(c) When a container subject to this subpart and having a design capacity greater than 0.1 m^3 is used for treatment of an off-site material by a waste stabilization process as defined in § 63.681 of this subpart, the owner or operator shall control air emissions from the container at those times during the process when the off-site material in the container is exposed to the atmosphere in accordance with the standards for Container Level 3 controls as specified in 40 CFR part 63, subpart PP—National Emission Standards for Containers.

10. Section 63.689 is amended by revising paragraphs (b), (c), (d) introductory text, and (d)(5) introductory text to read as follows:

§ 63.689 Standards: Transfer systems.

* * * * *

(b) For each transfer system that is subject to this section and is an individual drain system, the owner or operator shall control air emissions in accordance with the standards specified in 40 CFR part 63, subpart RR—National Emission Standards for Individual Drain Systems.

(c) For each transfer system that is subject to this section but is not an individual drain system, the owner or operator shall control air emissions by using one of the transfer systems specified in paragraphs (c)(1) through (c)(3) of this section.

(1) A transfer system that uses covers in accordance with the requirements specified in paragraph (d) of this section.

(2) A transfer system that consists of continuous hard-piping. All joints or seams between the pipe sections shall be permanently or semi-permanently sealed (e.g., a welded joint between two sections of metal pipe or a bolted and gasketed flange).

(3) A transfer system that is enclosed and vented through a closed-vent system to a control device in accordance with the requirements specified in paragraphs (c)(3)(i) and (c)(3)(ii) of this section.

(i) The transfer system is designed and operated such that an internal pressure in the vapor headspace in the enclosure is maintained at a level less than atmospheric pressure when the control device is operating, and

(ii) The closed-vent system and control device are designed and operated in accordance with the requirements of § 63.693 of this subpart.

(d) Owners and operators controlling air emissions from a transfer system using covers in accordance with the provisions of paragraph (c)(1) of this section shall meet the requirements specified in paragraphs (d)(1) through (d)(6) of this section.

* * * * *

(5) Whenever an off-site material is in the transfer system, the cover shall be installed with each closure device secured in the closed position except as specified in paragraph (d)(5)(i) or (d)(5)(ii) of this section.

* * * * *

11. Section 63.690 is revised to read as follows:

§ 63.690 Standards: Process vents.

(a) The provisions of this section apply to the control of air emissions from process vents for which § 63.683(c)(1)(i) of this subpart references the use of this section for such air emission control.

(b) The owner or operator must route the vent stream from each affected process vent through a closed-vent system to a control device that meets the standards specified in § 63.693 of this subpart. For the purpose of complying with this paragraph (b), a primary condenser is not a control device; however, a second condenser or other organic recovery device that is operated downstream of the primary condenser is considered a control device.

12. Section 63.691 is revised to read as follows:

§ 63.691 Standards: Equipment leaks.

(a) The provisions of this section apply to the control of air emissions from equipment leaks for which § 63.683(b)(3) of this subpart references the use of this section for such air emission control.

(b) The owner or operator shall control the HAP emitted from equipment leaks in accordance with the applicable provisions specified in either paragraph (b)(1) or (b)(2) of this section.

(1) The owner or operator controls the HAP emitted from equipment leaks in accordance with § 61.242 through § 61.247 in 40 CFR part 61, subpart V—National Emission Standards for Equipment Leaks; or

(2) The owner or operator controls the HAP emitted from equipment leaks in accordance with § 63.162 through § 63.182 in subpart H—National Emission Standards for Organic Hazardous Air Pollutants from Equipment Leaks.

13. Section 63.693 is revised to read as follows:

§ 63.693 Standards: Closed-vent systems and control devices.

(a) The provisions of this section apply to closed-vent systems and control devices used to control air emissions for which another standard references the use of this section for such air emission control.

(b) For each closed-vent system and control device used to comply with this section, the owner or operator shall meet the following requirements:

(1) The owner or operator must use a closed-vent system that meets the requirements specified in paragraph (c) of this section.

(2) The owner or operator must use a control device that meets the requirements specified in paragraphs (d) through (h) of this section as applicable to the type and design of the control device selected by the owner or operator to comply with the provisions of this section.

(3) Whenever gases or vapors containing HAP are vented through a closed-vent system connected to a control device used to comply with this section, the control device must be operating except at those times listed in either paragraph (b)(3)(i) or (b)(3)(ii) of this section.

(i) The control device may be bypassed for the purpose of performing planned routine maintenance of the closed-vent system or control device in situations when the routine maintenance cannot be performed during periods that the emission point vented to the control device is shutdown. On an annual basis, the total time that the closed-vent system or control device is bypassed to perform routine maintenance shall not exceed 240 hours per each calendar year.

(ii) The control device may be bypassed for the purpose of correcting a malfunction of the closed-vent system or control device. The owner or operator shall perform the adjustments or repairs necessary to correct the malfunction as soon as practicable after the malfunction is detected.

(4) The owner or operator must inspect and monitor each closed-vent system in accordance with the requirements specified in either paragraph (b)(4)(i) or (b)(4)(ii) of this section.

(i) The owner or operator inspects and monitors the closed-vent system in accordance with the requirements specified in § 63.695(c) of this subpart, and complies with the applicable recordkeeping requirements in § 63.696 of this subpart and the applicable reporting requirements in § 63.697 of this subpart.

(ii) As an alternative to meeting the requirements specified in paragraph (b)(4)(i) of this section, the owner or operator may choose to inspect and monitor the closed-vent system in accordance with the requirements under 40 CFR part 63, subpart H—National Emission Standards for Organic Hazardous Air Pollutants for Equipment Leaks as specified in 40 CFR 63.172(f) through (h), and complies with the applicable recordkeeping requirements in 40 CFR 63.181 and the applicable reporting requirements in 40 CFR 63.182.

(5) The owner or operator must monitor the operation of each control device in accordance with the requirements specified in paragraphs (d) through (h) of this section as applicable to the type and design of the control device selected by the owner or operator to comply with the provisions of this section.

(6) The owner or operator shall maintain records for each control device in accordance with the requirements of § 63.696 of this subpart.

(7) The owner or operator shall prepare and submit reports for each control device in accordance with the requirements of § 63.697 of this subpart.

(8) In the case when an owner or operator chooses to use a design analysis to demonstrate compliance of a control device with the applicable performance requirements specified in this section as provided for in paragraphs (d) through (g) of this section, the Administrator may request that the design analysis be revised or amended by the owner or operator to correct any deficiencies identified by the Administrator. If the owner or operator and the Administrator do not agree on the acceptability of using the design analysis (including any changes requested by the Administrator) to demonstrate that the control device achieves the applicable performance requirements, then the disagreement must be resolved using the results of a performance test conducted by the owner or operator in accordance with the requirements of § 63.694(l) of this subpart. The Administrator may choose to have an authorized representative observe the performance test conducted by the owner or operator. Should the results of this performance test not agree with the determination of control device performance based on the design analysis, then the results of the performance test will be used to establish compliance with this subpart.

(c) Closed-vent system requirements.

(1) The vent stream required to be controlled shall be conveyed to the control device by either of the following closed-vent systems:

(i) A closed-vent system that is designed to operate with no detectable organic emissions using the procedure specified in § 63.694(k) of this subpart; or

(ii) A closed-vent system that is designed to operate at a pressure below atmospheric pressure. The system shall be equipped with at least one pressure gage or other pressure measurement device that can be read from a readily accessible location to verify that negative pressure is being maintained in the closed-vent system when the control device is operating.

(2) In situations when the closed-vent system includes bypass devices that could be used to divert a vent stream from the closed-vent system to the atmosphere at a point upstream of the control device inlet, each bypass device must be equipped with either a flow indicator as specified in paragraph (c)(2)(i) of this section or a seal or locking device as specified in paragraph (c)(2)(ii) of this section. For the purpose of complying with this paragraph (c)(2), low leg drains, high point bleeds, analyzer vents, open-ended valves or lines, or pressure relief valves needed for safety reasons are not subject to the requirements of this paragraph (c)(2).

(i) If a flow indicator is used, the indicator must be installed at the entrance to the bypass line used to divert the vent stream from the closed-vent system to the atmosphere. The flow indicator must indicate a reading at least once every 15 minutes. The owner or operator must maintain records of the following information: hourly records of whether the flow indicator was operating and whether flow was detected at any time during the hour; and records of all periods when flow is detected or the flow indicator is not operating.

(ii) If a seal or locking device is used, the bypass line valve must be secured in the non-diverting position with a car-seal or a lock-and-key type configuration. The seal or locking device must be placed on the mechanism by which the bypass device position is controlled (e.g., valve handle, damper lever) when the bypass device is in the non-diverting position such that the bypass device cannot be moved to the diverting position without breaking the seal or removing the lock. The owner or operator must visually inspect the seal or closure mechanism at least once every month to determine that the bypass line valve is maintained in the non-diverting position and the vent stream is not diverted through the bypass line.

(d) Carbon adsorption control device requirements.

(1) The carbon adsorption system must achieve the performance specifications in either paragraph (d)(1)(i) or (d)(1)(ii) of this section.

(i) Recover 95 percent or more, on a weight-basis, of the total organic compounds (TOC), less methane and ethane, contained in the vent stream entering the carbon adsorption system; or

(ii) Recover 95 percent or more, on a weight-basis, of the total HAP listed in Table 1 of this subpart contained in the vent stream entering the carbon adsorption system.

(2) The owner or operator must demonstrate that the carbon adsorption system achieves the performance requirements in paragraph (d)(1) of this section by either performing a performance test as specified in paragraph (d)(2)(i) of this section or a design analysis as specified in paragraph (d)(2)(ii) of this section.

(i) An owner or operator choosing to use a performance test to demonstrate compliance must conduct the test in accordance with the requirements of § 63.694(l) of this subpart.

(ii) An owner or operator choosing to use a design analysis to demonstrate compliance must include as part of this design analysis the information specified in either paragraph (d)(2)(ii)(A) or (d)(2)(ii)(B) of this section as applicable to the carbon adsorption system design.

(A) For a regenerable carbon adsorption system, the design analysis shall address the vent stream composition, constituent concentrations, flow rate, relative humidity, and temperature and shall establish the design exhaust vent stream organic compound concentration, adsorption cycle time, number and capacity of carbon beds, type and working capacity of activated carbon used for carbon beds, design total regeneration steam flow over the period of each complete carbon bed regeneration cycle, design carbon bed temperature after regeneration, design carbon bed regeneration time, and design service life of the carbon.

(B) For a nonregenerable carbon adsorption system (e.g., a carbon canister), the design analysis shall address the vent stream composition, constituent concentrations, flow rate, relative humidity, and temperature and shall establish the design exhaust vent stream organic compound concentration, carbon bed capacity, activated carbon type and working capacity, and design carbon replacement interval based on the total

carbon working capacity of the control device and emission point operating schedule.

(3) The owner or operator must monitor the operation of the carbon adsorption system in accordance with the requirements of § 63.695(e) of this subpart using one of the continuous monitoring systems specified in paragraphs (d)(3)(i) through (d)(3)(iii) of this section.

(i) For a regenerative-type carbon adsorption system:

(A) A continuous parameter monitoring system to measure and record the average total regeneration stream mass flow or volumetric flow during each carbon bed regeneration cycle. The integrating regenerating stream flow monitoring device must have an accuracy of ±10 percent; and

(B) A continuous parameter monitoring system to measure and record the average carbon bed temperature for the duration of the carbon bed steaming cycle and to measure the actual carbon bed temperature after regeneration and within 15 minutes of completing the cooling cycle. The accuracy of the temperature monitoring device must be ±1 percent of the temperature being measured, expressed in degrees Celsius or ±5°C, whichever is greater.

(ii) A continuous monitoring system to measure and record the daily average concentration level of organic compounds in the exhaust gas stream from the control device. The accuracy of the organic monitoring device must be ±1 percent of the concentration being measured.

(iii) A continuous monitoring system that measures other alternative operating parameters upon approval of the Administrator as specified in 40 CFR 63.8(f)(1) through (f)(5) of this part.

(4) The owner or operator shall manage the carbon used for the carbon adsorption system, as follows:

(i) Following the initial startup of the control device, all carbon in the control device shall be replaced with fresh carbon on a regular, predetermined time interval that is no longer than the carbon service life established for the carbon adsorption system.

(ii) The spent carbon removed from the carbon adsorption system must be either regenerated, reactivated, or burned in one of the units specified in paragraphs (d)(4)(ii)(A) through (d)(4)(ii)(G) of this section.

(A) Regenerated or reactivated in a thermal treatment unit for which the owner or operator has been issued a final permit under 40 CFR part 270 that implements the requirements of 40 CFR part 264, subpart X.

(B) Regenerated or reactivated in a thermal treatment unit equipped with and operating air emission controls in accordance with this section.

(C) Regenerated or reactivated in a thermal treatment unit equipped with and operating organic air emission controls in accordance with a national emission standard for hazardous air pollutants under another subpart in 40 CFR part 63 or 40 CFR part 61.

(D) Burned in a hazardous waste incinerator for which the owner or operator has been issued a final permit under 40 CFR part 270 that implements the requirements of 40 CFR part 264, subpart O.

(E) Burned in a hazardous waste incinerator for which the owner or operator has designed and operates the incinerator in accordance with the interim status requirements of 40 CFR part 265, subpart O.

(F) Burned in a boiler or industrial furnace for which the owner or operator has been issued a final permit under 40 CFR part 270 that implements the requirements of 40 CFR part 266, subpart H.

(G) Burned in a boiler or industrial furnace for which the owner or operator has designed and operates the unit in accordance with the interim status requirements of 40 CFR part 266, subpart H.

(e) Condenser control device requirements.

(1) The condenser must achieve the performance specifications in either paragraph (e)(1)(i) or (e)(1)(ii) of this section.

(i) Recover 95 percent or more, on a weight-basis, of the total organic compounds (TOC), less methane and ethane, contained in the vent stream entering the condenser; or

(ii) Recover 95 percent or more, on a weight-basis, of the total HAP, listed in Table 1 of this subpart, contained in the vent stream entering the condenser.

(2) The owner or operator must demonstrate that the condenser achieves the performance requirements in paragraph (e)(1) of this section by either performing a performance test as specified in paragraph (e)(2)(i) of this section or a design analysis as specified in paragraph (e)(2)(ii) of this section.

(i) An owner or operator choosing to use a performance tests to demonstrate compliance must conduct the test in accordance with the requirements of § 63.694(l) of this subpart.

(ii) An owner or operator choosing to use a design analysis to demonstrate compliance must include as part of this design analysis the following information: description of the vent stream composition, constituent concentrations, flow rate, relative humidity, and temperature; and specification of the design outlet organic compound concentration level, design average temperature of the condenser exhaust vent stream, and the design average temperatures of the coolant fluid at the condenser inlet and outlet.

(3) The owner or operator must monitor the operation of the condenser in accordance with the requirements of § 63.695(e) of this subpart using one of the continuous monitoring systems specified in paragraphs (e)(3)(i) through (e)(3)(iii) of this section.

(i) A continuous parameter monitoring system to measure and record the daily average temperature of the exhaust gases from the control device. The accuracy of the temperature monitoring device shall be ±1 percent of the temperature being measured, expressed in degrees Celsius or ±5°C, whichever is greater.

(ii) A continuous monitoring system to measure and record the daily average concentration of organic compounds in the exhaust vent stream from the control device. The accuracy of the concentration monitoring device shall be ±1 percent of the concentration being measured.

(iii) A continuous monitoring system that measures other alternative operating parameters upon approval of the Administrator as specified in 40 CFR 63.8(f)(1) through (f)(5) of this part.

(f) Vapor incinerator control device requirements.

(1) The vapor incinerator must achieve the performance specifications in either paragraph (f)(1)(i), (f)(1)(ii), or (f)(1)(iii) of this section.

(i) Destroy the total organic compounds (TOC), less methane and ethane, contained in the vent stream entering the vapor incinerator either:

(A) By 95 percent or more, on a weight-basis, or

(B) To achieve a total incinerator outlet concentration for the TOC, less methane and ethane, of less than or equal to ppmv on a dry basis corrected to 3 percent oxygen.

(ii) Destroy the HAP listed in Table 1 of this subpart contained in the vent stream entering the vapor incinerator either:

(A) By 95 percent or more, on a total HAP weight-basis, or

(B) To achieve a total incinerator outlet concentration for the HAP, listed in Table 1 of this subpart, of less than or equal to ppmv on a dry basis corrected to 3 percent oxygen.

(iii) Maintain the conditions in the vapor incinerator combustion chamber at a residence time of 0.5 seconds or

longer and at a temperature of 760°C or higher.

(2) The owner or operator must demonstrate that the vapor incinerator achieves the performance requirements in paragraph (f)(1) of this section by either performing a performance test as specified in paragraph (f)(2)(i) of this section or a design analysis as specified in paragraph (f)(2)(ii) of this section.

(i) An owner or operator choosing to use a performance test to demonstrate compliance must conduct the test in accordance with the requirements of § 63.694(l) of this subpart.

(ii) An owner or operator choosing to use a design analysis to demonstrate compliance must include as part of this design analysis the information specified in either paragraph (f)(2)(ii)(A) or (f)(2)(ii)(B) of this section as applicable to the vapor incinerator design.

(A) For a thermal vapor incinerator, the design analysis shall address the vent stream composition, constituent concentrations, and flow rate and shall establish the design minimum and average temperatures in the combustion chamber and the combustion chamber residence time.

(B) For a catalytic vapor incinerator, the design analysis shall address the vent stream composition, constituent concentrations, and flow rate and shall establish the design minimum and average temperatures across the catalyst bed inlet and outlet, and the design service life of the catalyst.

(3) The owner or operator must monitor the operation of the vapor incinerator in accordance with the requirements of § 63.695(e) of this subpart using one of the continuous monitoring systems specified in paragraphs (f)(3)(i) through (f)(3)(iv) of this section as applicable to the type of vapor incinerator used.

(i) For a thermal vapor incinerator, a continuous parameter monitoring system to measure and record the daily average temperature of the exhaust gases from the control device. The accuracy of the temperature monitoring device must be ±1 percent of the temperature being measured, expressed in degrees Celsius of ±0.5°C, whichever is greater.

(ii) For a catalytic vapor incinerator, a temperature monitoring device capable of monitoring temperature at two locations equipped with a continuous recorder. One temperature sensor shall be installed in the vent stream at the nearest feasible point to the catalyst bed inlet and a second temperature sensor shall be installed in the vent stream at the nearest feasible point to the catalyst bed outlet.

(iii) For either type of vapor incinerator, a continuous monitoring system to measure and record the daily average concentration of organic compounds in the exhaust vent stream from the control device. The accuracy of the concentration monitoring device must be ±1 percent of the concentration being measured.

(iv) For either type of vapor incinerator, a continuous monitoring system that measures alternative operating parameters other than those specified in paragraph (f)(3)(i) or (f)(3)(ii) of this section upon approval of the Administrator as specified in 40 CFR 63.8(f)(1) through (f)(5) of this part.

(g) Boilers and process heaters control device requirements.

(1) The boiler or process heater must achieve the performance specifications in either paragraph (g)(1)(i), (g)(1)(ii), (g)(1)(iii), (g)(1)(iv), or (g)(1)(v) of this section.

(i) Destroy the total organic compounds (TOC), less methane and ethane, contained in the vent stream introduced into the flame zone of the boiler or process heater either:

(A) By 95 percent or more, on a weight-basis, or

(B) To achieve in the exhausted combustion gases a total concentration for the TOC, less methane and ethane, of less than or equal to 20 parts ppmv on a dry basis corrected to 3 percent oxygen.

(ii) Destroy the HAP listed in Table 1 of this subpart contained in the vent stream entering the vapor incinerator either:

(A) By 95 percent or more, on a total HAP weight-basis, or

(B) To achieve in the exhausted combustion gases a total concentration for the HAP, listed in Table 1 of the subpart, of less than or equal to 20 ppmv on a dry basis corrected to 3 percent oxygen.

(iii) Introduce the vent stream into the flame zone of the boiler or process heater and maintain the conditions in the combustion chamber at a residence time of 0.5 seconds or longer and at a temperature of 760°C or higher.

(iv) Introduce the vent stream with the fuel that provides the predominate heat input to the boiler or process heater (i.e., the primary fuel); or

(v) Introduce the vent stream to a boiler or process heater for which the owner or operator either has been issued a final permit under 40 CFR part 270 and complies with the requirements of 40 CFR part 266, subpart H of this chapter; or has certified compliance with the interim status requirements of 40 CFR part 266, subpart H of this chapter.

(2) The owner or operator must demonstrate that the boiler or process heater achieves the performance specifications in paragraph (g)(1) of this section chosen by the owner or operator using the applicable method specified in paragraph (g)(2)(i) or (g)(2)(ii) of this section.

(i) If an owner or operator chooses to comply with the performance specifications in either paragraph (g)(1)(i), (g)(1)(ii), or (g)(1)(iii) of this section, the owner or operator must demonstrate compliance with the applicable performance specifications by either performing a performance test as specified in paragraph (g)(2)(i)(A) of this section or a design analysis as specified in paragraph (g)(2)(i)(B) of this section.

(A) An owner or operator choosing to use a performance test to demonstrate compliance must conduct the test in accordance with the requirements of § 63.694(l) of this subpart.

(B) An owner or operator choosing to use a design analysis to demonstrate compliance must include as part of this design analysis the following information: description of the vent stream composition, constituent concentrations, and flow rate; specification of the design minimum and average flame zone temperatures and combustion zone residence time; and description of the method and location by which the vent stream is introduced into the flame zone.

(ii) If an owner or operator chooses to comply with the performance specifications in either paragraph (g)(1)(iv) or (g)(1)(v) of this section, the owner or operator must demonstrate compliance by maintaining the records that document that the boiler or process heater is designed and operated in accordance with the applicable requirements of this section.

(3) For a boiler or process heater complying with the performance specifications in either paragraph (g)(1)(i), (g)(1)(ii), or (g)(1)(iii) of this section, the owner or operator must monitor the operation of a boiler or process heater in accordance with the requirements of § 63.695(e) of this subpart using one of the continuous monitoring systems specified in paragraphs (g)(3)(i) through (g)(3)(iii) of this section.

(i) A continuous parameter monitoring system to measure and record the daily average combustion zone temperature. The accuracy of the temperature sensor must be ±1 percent of the temperature being measured, expressed in degrees Celsius or ±0.5°C, whichever is greater;

(ii) A continuous monitoring system to measure and record the daily average concentration of organic compounds in the exhaust vent stream from the control device. The accuracy of the concentration monitoring device must be ±1 percent of the concentration being measured.

(iii) A continuous monitoring system that measures alternative operating parameters other than those specified in paragraph (g)(3)(i) or (g)(3)(ii) of this section upon approval of the Administrator as specified in 40 CFR 63.8(f)(1) through (f)(5) of this part.

(h) Flare control device requirements.

(1) The flare must be designed and operated in accordance with the requirements in 40 CFR 63.11(b).

(2) The owner or operator must demonstrate that the flare achieves the requirements in paragraph (h)(1) of this section by performing the procedures specified in paragraph (h)(2)(i) of this section. A previous compliance demonstration for the flare that meets all of the conditions specified in paragraph (h)(2)(ii) of this section may be used by an owner or operator to demonstrate compliance with this paragraph (h)(2).

(i) To demonstrate that a flare achieves the requirements in paragraph (h)(1) of this section, the owner or operator performs all of the procedures specified in paragraphs (h)(2)(i)(A) through (h)(2)(i)(C) of this section.

(A) The owner or operator conducts a visible emission test for the flare in accordance with the requirements specified in 40 CFR 63.11(b)(4).

(B) The owner or operator determines the net heating value of the gas being combusted in the flare in accordance with the requirements specified in 40 CFR 63.11(b)(6); and

(C) The owner or operator determines the flare exit velocity in accordance with the requirements applicable to the flare design as specified in 40 CFR 63.11(b)(7) or 40 CFR 63.11(b)(8).

(ii) A previous compliance demonstration for the flare may be used by an owner or operator to demonstrate compliance with paragraph (h)(2) of this section provided that all conditions for the compliance determination and subsequent flare operation are met as specified in paragraphs (h)(2)(ii)(A) and (h)(2)(ii)(B) of this section.

(A) The owner or operator conducted the compliance determination using the procedures specified in paragraph (h)(2)(i) of this section.

(B) No flare operating parameter or process changes have occurred since completion of the compliance determination which could affect the compliance determination results.

(3) The owner or operator must monitor the operation of the flare using a heat sensing monitoring device (including but not limited to a thermocouple, ultraviolet beam sensor, or infrared sensor) that continuously detects the presence of a pilot flame. The owner or operator must record, for each 1-hour period, whether the monitor was continuously operating and whether a pilot flame was continuously present during each hour as required in § 63.696(b)(3) of this subpart.

14. Section 63.694 is amended by adding paragraphs (a)(12) and (m) and by revising paragraphs (b)(2)(ii), (b)(2)(iii), (b)(3)(i), (c), (e), (f), (g), (h), (i) and (k) to read as follows:

§ 63.694 Testing methods and procedures.

(a) * * *

(12) To determine process vent stream flow rate and total organic HAP concentration for compliance with the standards specified in § 63.693 of this subpart, the testing methods and procedures are specified in paragraph (m) of this section.

(b) * * *

(2) * * *

(ii) *Analysis.* Each collected sample must be prepared and analyzed in accordance with one of the following methods as applicable to the sampled off-site material for the purpose of measuring the HAP listed in Table 1 of this subpart:

(A) Method 305 in 40 CFR part 63, appendix A.

(B) Method 25D in 40 CFR part 60, appendix A.

(C) Method 624 in 40 CFR part 136, appendix A. If this method is used to analyze one or more compounds that are not on the method's published list of approved compounds, the Alternative Test Procedure specified in 40 CFR 136.4 and 40 CFR 136.5 must be followed.

(D) Method 625 in 40 CFR part 136, appendix A. For the purpose of using this method to comply with this subpart, the owner or operator must perform corrections to these compounds based on the "accuracy as recovery" using the factors in Table 7 of the method. If this method is used to analyze one or more compounds that are not on the method's published list of approved compounds, the Alternative Test Procedure specified in 40 CFR 136.4 and 40 CFR 136.5 must be followed.

(E) Method 1624 in 40 CFR part 136, appendix A.

(F) Method 1625 in 40 CFR part 136, appendix A.

(G) Method 8260 in "Test Methods for Evaluating Solid Waste, Physical/Chemical Methods," EPA Publication No. SW-846, Third Edition, September 1986, as amended by Update I, November 15, 1992. As an alternative, an owner or operator may use any more recent, updated version of Method 8260 approved by the EPA. For the purpose of using Method 8260 to comply with this subpart, the owner or operator must maintain a formal quality assurance program consistent with section 8 of Method 8260, and this program must include the following elements related to measuring the concentrations of volatile compounds:

(*1*) Documentation of site-specific procedures to minimize the loss of compounds due to volatilization, biodegradation, reaction, or sorption during the sample collection, storage, and preparation steps.

(*2*) Documentation of specific quality assurance procedures followed during sampling, sample preparation, sample introduction, and analysis.

(*3*) Measurement of the average accuracy and precision of the specific procedures, including field duplicates and field spiking of the off-site material source before or during sampling with compounds having similar chemical characteristics to the target analytes.

(H) Method 8270 in "Test Methods for Evaluating Solid Waste, Physical/Chemical Methods," EPA Publication No. SW-846, Third Edition, September 1986, as amended by Update I, November 15, 1992. As an alternative, an owner or operator may use any more recent, updated version of Method 8270 approved by the EPA. For the purpose of using Method 8270 to comply with this subpart, the owner or operator must maintain a formal quality assurance program consistent with Method 8270, and this program must include the following elements related to measuring the concentrations of volatile compounds:

(*1*) Documentation of site-specific procedures to minimize the loss of compounds due to volatilization, biodegradation, reaction, or sorption during the sample collection, storage, and preparation steps.

(*2*) Documentation of specific quality assurance procedures followed during sampling, sample preparation, sample introduction, and analysis.

(*3*) Measurement of the average accuracy and precision of the specific procedures, including field duplicates and field spiking of the off-site material source before or during sampling with compounds having similar chemical characteristics to the target analytes.

(I) Any other analysis method that has been validated in accordance with the procedures specified in section 5.1 and

section 5.3 and the corresponding calculations in section 6.1 or section 6.3 of Method 301 in appendix A in 40 CFR part 63. The data are acceptable if they meet the criteria specified in section 6.1.5 or section 6.3.3 of Method 301. If correction is required under section 6.3.3 of Method 301, the data are acceptable if the correction factor is within the range of 0.7 to 1.30. Other sections of Method 301 are not required.

(iii) Calculations. The average VOHAP concentration ($\bar{C}$) on a mass-weighted basis shall be calculated by using the results for all samples analyzed in accordance with paragraph (b)(2)(ii) of this section and the following equation. An owner or operator using a test method that provides species-specific chemical concentrations may adjust the measured concentrations to the corresponding concentration values which would be obtained had the off-site material samples been analyzed using Method 305. To adjust these data, the measured concentration for each individual HAP chemical species contained in the off-site material is multiplied by the appropriate species-specific adjustment factor (f_{m305}) listed in Table 1 of this subpart.

$$\bar{C} = \frac{1}{Q} \times \sum_{i=1}^{n} (Q_i \times C_i)$$

Where:

$\bar{C}$ = Average VOHAP concentration of the off-site material at the point-of-delivery on a mass-weighted basis, ppmw.

i = Individual sample "i" of the off-site material.

n = Total number of samples of the off-site material collected (at least 4) for the averaging period (not to exceed 1 year).

Q_i = Mass quantity of off-site material stream represented by C_i, kg/hr.

Q_T = Total mass quantity of off-site material during the averaging period, kg/hr.

C_i = Measured VOHAP concentration of sample "i" as determined in accordance with the requirements of § 63.694(a), ppmw.

* * * * *

(3) * * *

(i) Documentation shall be prepared that presents the information used as the basis for the owner's or operator's knowledge of the off-site material stream's average VOHAP concentration. Examples of information that may be used as the basis for knowledge include: material balances for the source or process generating the off-site material stream; species-specific chemical test data for the off-site material stream from previous testing that are still applicable to the current off-site material stream; previous test data for other locations managing the same type of off-site material stream; or other knowledge based on information in documents such as manifests, shipping papers, or waste certification notices.

* * * * *

(c) Determination of average VOHAP concentration of an off-site material stream at the point-of-treatment.

(1) *Sampling.* Samples of the off-site material stream shall be collected at the point-of-treatment in a manner such that volatilization of organics contained in the sample is minimized and an adequately representative sample is collected and maintained for analysis by the selected method.

(i) The averaging period to be used for determining the average VOHAP concentration for the off-site material stream on a mass-weighted average basis shall be designated and recorded. The averaging period can represent any time interval that the owner or operator determines is appropriate for the off-site material stream but shall not exceed 1 year.

(ii) A sufficient number of samples, but no less than four samples, shall be collected to represent the complete range of HAP compositions and HAP quantities that occur in the off-site material stream during the entire averaging period due to normal variations in the operating conditions for the treatment process. Examples of such normal variations are seasonal variations in off-site material quantity or fluctuations in ambient temperature.

(iii) All samples shall be collected and handled in accordance with written procedures prepared by the owner or operator and documented in a site sampling plan. This plan shall describe the procedure by which representative samples of the off-site material stream are collected such that a minimum loss of organics occurs throughout the sample collection and handling process and by which sample integrity is maintained. A copy of the written sampling plan shall be maintained on-site in the plant site operating records. An example of an acceptable sampling plan includes a plan incorporating sample collection and handling procedures in accordance with the requirements specified in "Test Methods for Evaluating Solid Waste, Physical/Chemical Methods," EPA Publication No. SW-846 or Method 25D in 40 CFR part 60, appendix A.

(2) *Analysis.* Each collected sample must be prepared and analyzed in accordance with one of the methods specified in paragraphs (b)(2)(ii)(A) through (b)(2)(ii)(I) of this section, as applicable to the sampled off-site material, for the purpose of measuring the HAP listed in Table 1 of this subpart.

(3) *Calculations.* The average VOHAP concentration ($\bar{C}$) a mass-weighted basis shall be calculated by using the results for all samples analyzed in accordance with paragraph (c)(2) of this section and the following equation. An owner or operator using a test method that provides species-specific chemical concentrations may adjust the measured concentrations to the corresponding concentration values which would be obtained had the off-site material samples been analyzed using Method 305. To adjust these data, the measured concentration for each individual HAP chemical species contained in the off-site material is multiplied by the appropriate species-specific adjustment factor (f_{m305}) listed in Table 1 of this subpart.

$$\bar{C} = \frac{1}{Q_T} \times \sum_{i=1}^{n} (Q_i \times C_i)$$

Where:

$\bar{C}$ = Average VOHAP concentration of the off-site material on a mass-weighted basis, ppmw.

i = Individual sample "i" of the off-site material.

n = Total number of samples of the off-site material collected (at least 4) for the averaging period (not to exceed 1 year).

Q_i = Mass quantity of off-site material stream represented by C_i, kg/hr.

Q_T = Total mass quantity of off-site material during the averaging period, kg/hr.

C_i = Measured VOHAP concentration of sample "i" as determined in accordance with the requirements of § 63.694(a), ppmw.

* * * * *

(e) Determination of required HAP mass removal rate (RMR).

(1) Each individual stream containing HAP that enters the treatment process shall be identified.

(2) The average VOHAP concentration at the point-of-delivery for each stream identified in paragraph (e)(1) of this section shall be determined using the test methods and procedures specified in paragraph (b) of this section.

(3) For each stream identified in paragraph (e)(1) of this section that has an average VOHAP concentration equal to or greater than 500 ppmw at the point-of-delivery, the average volumetric flow rate and the density of the off-site material stream at the point-of-delivery shall be determined.

(4) The required HAP mass removal rate (RMR) shall be calculated by using the average VOHAP concentration, average volumetric flow rate, and density determined in paragraph (e)(3) of this section for each stream and the following equation:

$$RMR = \sum_{y=1}^{n}\left[V_y \times k_y \times \frac{\left(\overline{C_y} - 500\ ppmw\right)}{10^6}\right]$$

Where:

RMR = Required HAP mass removal rate, kg/hr.

y = Individual stream "y" that has a VOHAP concentration equal to or greater than 500 ppmw at the point-of-delivery as determined in § 63.694(b).

n = Total number of "y" streams treated by process.

V_y = Average volumetric flow rate of stream "y" at the point-of-delivery, m^3/hr.

k_y = Density of stream "y", kg/m^3.

$\overline{C_y}$ = Average VOHAP concentration of stream "y" at the point-of-delivery as determined in § 63.694(b)(2), ppmw.

(f) Determination of actual HAP mass removal rate (MR).

(1) The actual HAP mass removal rate (MR) shall be determined based on results for a minimum of three consecutive runs. The sampling time for each run shall be 1 hour.

(2) The HAP mass flow entering the process (E_b) and the HAP mass flow exiting the process (E_a) shall be determined using the test methods and procedures specified in paragraphs (g)(2) through (g)(4) of this section.

(3) The actual mass removal rate shall be calculated using the HAP mass flow rates determined in paragraph (f)(2) of this section and the following equation:

$MR = E_b - E_a$

where:

MR = Actual HAP mass removal rate, kg/hr.

E_b = HAP mass flow entering process as determined in paragraph (f)(2) of this section, kg/hr.

E_a = HAP mass flow exiting process as determined in paragraph (f)(2) of this section, kg/hr.

(g) Determination of treatment process HAP reduction efficiency (R).

(1) The HAP reduction efficiency (R) for a treatment process shall be determined based on results for a minimum of three consecutive runs.

(2) Each individual stream containing HAP that enters the treatment process shall be identified. Each individual stream containing HAP that exits the treatment process shall be identified. The owner or operator shall prepare a sampling plan for measuring the identified streams that accurately reflects the retention time of the material in the process.

(3) For each run, information shall be determined for each stream identified in paragraph (g)(2) of this section as specified in paragraphs (g)(3)(i) through (g)(3)(iii) of this section.

(i) The mass quantity shall be determined for each stream identified in paragraph (g)(2) of this section as entering the process (Q_b). The mass quantity shall be determined for each stream identified in paragraph (g)(2) of this section as exiting the process (Q_a).

(ii) The average VOHAP concentration at the point-of-delivery shall be determined for each stream entering the process (C_b) (as identified in paragraph (g)(2) of this section) using the test methods and procedures specified in paragraph (b) of this section.

(iii) The average VOHAP concentration at the point-of-treatment shall be determined for each stream exiting the process (C_a) (as identified in paragraph (g)(2) of this section) using the test methods and procedures specified in paragraph (c) of this section.

(4) The HAP mass flow entering the process (E_b) and the HAP mass flow exiting the process (E_a) shall be calculated using the results determined in paragraph (g)(3) of this section and the following equations:

$$E_a = \frac{1}{10^6}\sum_{j=1}^{m}\left(Q_{aj} \times \overline{C_{aj}}\right)$$

$$E_b = \frac{1}{10^6}\sum_{j=1}^{m}\left(Q_{bj} \times \overline{C_{bj}}\right)$$

Where:

E_b = HAP mass flow entering process, kg/hr.

E_a = HAP mass flow exiting process, kg/hr.

m = Total number of runs (at least 3)

j = Individual run "j"

Q_{bj} = Mass quantity of material entering process during run "j", kg/hr.

Q_{aj} = Average mass quantity of material exiting process during run "j", kg/hr.

C_{aj} = Average VOHAP concentration of material exiting process during run "j" as determined in § 63.694(c), ppmw.

C_{bj} = Average VOHAP concentration of material entering process during run "j" as determined in § 63.694(b)(2), ppmw.

(5) The HAP reduction efficiency (R) shall be calculated using the HAP mass flow rates determined in paragraph (g)(4) of this section and the following equation:

$$R = \frac{E_b - E_a}{E_b} \times 100$$

Where:

R = HAP reduction efficiency, percent.

E_b = HAP mass flow entering process as determined in paragraph (g)(4) of this section, kg/hr.

E_a = HAP mass flow exiting process as determined in accordance with the requirements of paragraph (g)(4) of this section, kg/hr.

(h) Determination of HAP biodegradation efficiency (R_{bio}).

(1) The fraction of HAP biodegraded (F_{bio}) shall be determined using one of the procedures specified in appendix C of this part 63.

(2) The HAP biodegradation efficiency (R_{bio}) shall be calculated by using the following equation:

$R_{bio} = F_{bio} \times 100$

where:

R_{bio} = HAP biodegradation efficiency, percent.

F_{bio} = Fraction of HAP biodegraded as determined in paragraph (h)(1) of this section.

(i) Determination of actual HAP mass removal rate (MR_{bio}).

(1) The actual HAP mass removal rate (MR_{bio}) shall be determined based on results for a minimum of three consecutive runs. The sampling time for each run shall be 1 hour.

(2) The HAP mass flow entering the process (E_b) shall be determined using the test methods and procedures specified in paragraphs (g)(2) through (g)(4) of this section.

(3) The fraction of HAP biodegraded (F_{bio}) shall be determined using the procedure specified in 40 CFR part 63, appendix C of this part.

(4) The actual mass removal rate shall be calculated by using the HAP mass

flow rates and fraction of HAP biodegraded determined in paragraphs (i)(2) and (i)(3), respectively, of this section and the following equation:

$MR_{bio} = E^b \times F_{bio}$

Where:

MR_{bio} = Actual HAP mass removal rate, kg/hr.

E_b = HAP mass flow entering process, kg/hr.

F_{bio} = Fraction of HAP biodegraded.

* * * * *

(k) Procedure for determining no detectable organic emissions for the purpose of complying with this subpart.

(1) The test shall be conducted in accordance with the procedures specified in Method 21 of 40 CFR part 60, appendix A. Each potential leak interface (i.e., a location where organic vapor leakage could occur) on the cover and associated closure devices shall be checked. Potential leak interfaces that are associated with covers and closure devices include, but are not limited to: the interface of the cover and its foundation mounting; the periphery of any opening on the cover and its associated closure device; and the sealing seat interface on a spring-loaded pressure-relief valve.

(2) The test shall be performed when the unit contains a material having a total organic concentration representative of the range of concentrations for the materials expected to be managed in the unit. During the test, the cover and closure devices shall be secured in the closed position.

(3) The detection instrument shall meet the performance criteria of Method 21 of 40 CFR part 60, appendix A, except the instrument response factor criteria in section 3.1.2(a) of Method 21 shall be for the average composition of the organic constituents in the material placed in the unit, not for each individual organic constituent.

(4) The detection instrument shall be calibrated before use on each day of its use by the procedures specified in Method 21 of 40 CFR part 60, appendix A.

(5) Calibration gases shall be as follows:

(i) Zero air (less than 10 ppmv hydrocarbon in air); and

(ii) A mixture of methane or n-hexane in air at a concentration of approximately, but less than, 10,000 ppmv.

(6) An owner or operator may choose to adjust or not adjust the detection instrument readings to account for the background organic concentration level. If an owner or operator chooses to adjust the instrument readings for the background level, the background level value must be determined according to the procedures in Method 21 of 40 CFR part 60, appendix A.

(7) Each potential leak interface shall be checked by traversing the instrument probe around the potential leak interface as close to the interface as possible, as described in Method 21. In the case when the configuration of the cover or closure device prevents a complete traverse of the interface, all accessible portions of the interface shall be sampled. In the case when the configuration of the closure device prevents any sampling at the interface and the device is equipped with an enclosed extension or horn (e.g., some pressure relief devices), the instrument probe inlet shall be placed at approximately the center of the exhaust area to the atmosphere.

(8) An owner or operator must determine if a potential leak interface operates with no detectable emissions using the applicable procedure specified in paragraph (k)(8)(i) or (k)(8)(ii) of this section.

(i) If an owner or operator chooses not to adjust the detection instrument readings for the background organic concentration level, then the maximum organic concentration value measured by the detection instrument is compared directly to the applicable value for the potential leak interface as specified in paragraph (k)(9) of this section.

(ii) If an owner or operator chooses to adjust the detection instrument readings for the background organic concentration level, the value of the arithmetic difference between the maximum organic concentration value measured by the instrument and the background organic concentration value as determined in paragraph (k)(6) of this section is compared with the applicable value for the potential leak interface as specified in paragraph (k)(9) of this section.

(9) A potential leak interface is determined to operate with no detectable emissions using the applicable criteria specified in paragraphs (k)(9)(i) and (k)(9)(ii) of this section.

(i) For a potential leak interface other than a seal around a shaft that passes through a cover opening, the potential leak interface is determined to operate with no detectable organic emissions if the organic concentration value determined in paragraph (k)(8) is less than 500 ppmv.

(ii) For a seal around a shaft that passes through a cover opening, the potential leak interface is determined to operate with no detectable organic emissions if the organic concentration value determined in paragraph (k)(8) is less than 10,000 ppmv.

* * * * *

(m) Determination of process vent stream flow rate and total HAP concentration.

(1) Method 1 or 1A of 40 CFR part 60, appendix A, as appropriate, must be used for selection of the sampling site.

(2) No traverse site selection method is needed for vents smaller than 0.10 meter in diameter.

(3) Process vent stream gas volumetric flow rate must be determined using Method 2, 2A, 2C, or 2D of 40 CFR part 60, appendix A, as appropriate.

(4) Process vent stream total HAP concentration must be measured using the following procedures:

(i) Method 18 of 40 CFR part 60, appendix A, must be used to measure the total HAP concentration. Alternatively, any other method or data that has been validated according to the protocol in Method 301 of appendix A of this part may be used.

(ii) Where Method 18 of 40 CFR part 60, appendix A, is used, the following procedures must be used to calculate parts per million by volume concentration:

(A) The minimum sampling time for each run must be 1 hour in which either an integrated sample or four grab samples must be taken. If grab sampling is used, then the samples must be taken at approximately equal intervals in time, such as 15 minute intervals during the run.

(B) The total HAP concentration (C_{HAP}) must be computed according to the following equation:

$$C_{HAP} = \frac{\sum_{i=1}^{x}\left(\sum_{j=1}^{n} C_{ji}\right)}{X}$$

Where:

C_{HAP} = Total concentration of HAP compounds listed in Table 1 of this subpart, dry basis, parts per million by volume.

C_{ji} = Concentration of sample component j of the sample i, dry basis, parts per million by volume.

n = Number of components in the sample.

x = Number of samples in the sample run.

15. Section 63.695 is revised to read as follows:

§ 63.695 Inspection and monitoring requirements.

(a) This section specifies the inspection and monitoring procedures required to perform the following:

(1) To inspect tank fixed roofs and floating roofs for compliance with the Tank Level 2 controls standards specified in § 63.685 of this subpart, the inspection procedures are specified in paragraph (b) of this section.

(2) To inspect and monitor closed-vent systems for compliance with the standards specified in § 63.693 of this subpart, the inspection and monitoring procedures are specified in paragraph (c) of this section.

(3) To inspect and monitor transfer system covers for compliance with the standards specified in § 63.689(c)(1) of this subpart, the inspection and monitoring procedures are specified in paragraph (d) of this section.

(4) To monitor control devices for compliance with the standards specified in § 63.693 of this subpart, the monitoring procedures are specified in paragraph (e) of this section.

(b) Tank Level 2 fixed roof and floating roof inspection requirements.

(1) Owners and operators that use a tank equipped with an internal floating roof in accordance with the provisions of § 63.685(e) of this subpart shall meet the following inspection requirements:

(i) The floating roof and its closure devices shall be visually inspected by the owner or operator to check for defects that could result in air emissions. Defects include, but are not limited to, the internal floating roof is not floating on the surface of the liquid inside the tank; liquid has accumulated on top of the internal floating roof; any portion of the roof seals have detached from the roof rim; holes, tears, or other openings are visible in the seal fabric; the gaskets no longer close off the waste surfaces from the atmosphere; or the slotted membrane has more than 10 percent open area.

(ii) The owner or operator shall inspect the internal floating roof components as follows except as provided for in paragraph (b)(1)(iii) of this section:

(A) Visually inspect the internal floating roof components through openings on the fixed-roof (e.g., manholes and roof hatches) at least once every calendar year after initial fill, and

(B) Visually inspect the internal floating roof, primary seal, secondary seal (if one is in service), gaskets, slotted membranes, and sleeve seals (if any) each time the tank is emptied and degassed and at least every 10 years. Prior to each inspection, the owner or operator shall notify the Administrator in accordance with the reporting requirements specified in § 63.697 of this subpart.

(iii) As an alternative to performing the inspections specified in paragraph (b)(1)(ii) of this section for an internal floating roof equipped with two continuous seals mounted one above the other, the owner or operator may visually inspect the internal floating roof, primary and secondary seals, gaskets, slotted membranes, and sleeve seals (if any) each time the tank is emptied and degassed and at least every 5 years. Prior to each inspection, the owner or operator shall notify the Administrator in accordance with the reporting requirements specified in § 63.697 of this subpart.

(iv) In the event that a defect is detected, the owner or operator shall repair the defect in accordance with the requirements of paragraph (b)(4) of this section.

(v) The owner or operator shall maintain a record of the inspection in accordance with the requirements specified in § 63.696 of this subpart.

(2) Owners and operators that use a tank equipped with an external floating roof in accordance with the provisions of § 63.685(f) of this subpart shall meet the following requirements:

(i) The owner or operator shall measure the external floating roof seal gaps in accordance with the following requirements:

(A) The owner or operator shall perform measurements of gaps between the tank wall and the primary seal within 60 days after initial operation of the tank following installation of the floating roof and, thereafter, at least once every 5 years. Prior to each inspection, the owner or operator shall notify the Administrator in accordance with the reporting requirements specified in § 63.697 of this subpart.

(B) The owner or operator shall perform measurements of gaps between the tank wall and the secondary seal within 60 days after initial operation of the separator following installation of the floating roof and, thereafter, at least once every year. Prior to each inspection, the owner or operator shall notify the Administrator in accordance with the reporting requirements specified in § 63.697 of this subpart.

(C) If a tank ceases to hold off-site material for a period of 1 year or more, subsequent introduction of off-site material into the tank shall be considered an initial operation for the purposes of paragraphs (b)(2)(i)(A) and (b)(2)(i)(B) of this section.

(D) The owner shall determine the total surface area of gaps in the primary seal and in the secondary seal individually using the following procedure.

(*1*) The seal gap measurements shall be performed at one or more floating roof levels when the roof is floating off the roof supports.

(*2*) Seal gaps, if any, shall be measured around the entire perimeter of the floating roof in each place where a 0.32-centimeter (cm) (1/8-inch) diameter uniform probe passes freely (without forcing or binding against the seal) between the seal and the wall of the tank and measure the circumferential distance of each such location.

(*3*) For a seal gap measured under paragraph (b)(2) of this section, the gap surface area shall be determined by using probes of various widths to measure accurately the actual distance from the tank wall to the seal and multiplying each such width by its respective circumferential distance.

(*4*) The total gap area shall be calculated by adding the gap surface areas determined for each identified gap location for the primary seal and the secondary seal individually, and then dividing the sum for each seal type by the nominal diameter of the tank. These total gap areas for the primary seal and secondary seal are then compared to the respective standards for the seal type as specified in § 63.685(f)(1) of this subpart.

(E) In the event that the seal gap measurements do not conform to the specifications in § 63.685(f)(1) of this subpart, the owner or operator shall repair the defect in accordance with the requirements of paragraph (b)(4) of this section.

(F) The owner or operator shall maintain a record of the inspection in accordance with the requirements specified in § 63.696 of this subpart.

(ii) The owner or operator shall visually inspect the external floating roof in accordance with the following requirements:

(A) The floating roof and its closure devices shall be visually inspected by the owner or operator to check for defects that could result in air emissions. Defects include, but are not limited to: holes, tears, or other openings in the rim seal or seal fabric of the floating roof; a rim seal detached from the floating roof; all or a portion of the floating roof deck being submerged below the surface of the liquid in the tank; broken, cracked, or otherwise damaged seals or gaskets on closure devices; and broken or missing hatches, access covers, caps, or other closure devices.

(B) The owner or operator shall perform the inspections following installation of the external floating roof and, thereafter, at least once every year.

(C) In the event that a defect is detected, the owner or operator shall repair the defect in accordance with the

requirements of paragraph (b)(4) of this section.

(D) The owner or operator shall maintain a record of the inspection in accordance with the requirements specified in § 63.696(d) of this subpart.

(3) Owners and operators that use a tank equipped with a fixed roof in accordance with the provisions of § 63.685(g) of this subpart shall meet the following requirements:

(i) The fixed roof and its closure devices shall be visually inspected by the owner or operator to check for defects that could result in air emissions. Defects include, but are not limited to, visible cracks, holes, or gaps in the roof sections or between the roof and the separator wall; broken, cracked, or otherwise damaged seals or gaskets on closure devices; and broken or missing hatches, access covers, caps, or other closure devices. In the case when a tank is buried partially or entirely underground, inspection is required only for those portions of the cover that extend to or above the ground surface, and those connections that are on such portions of the cover (e.g., fill ports, access hatches, gauge wells, etc.) and can be opened to the atmosphere.

(ii) The owner or operator must perform an initial inspection following installation of the fixed roof. Thereafter, the owner or operator must perform the inspections at least once every calendar year except as provided for in paragraph (f) of this section.

(iii) In the event that a defect is detected, the owner or operator shall repair the defect in accordance with the requirements of paragraph (b)(4) of this section.

(iv) The owner or operator shall maintain a record of the inspection in accordance with the requirements specified in § 63.696(e) of this subpart.

(4) The owner or operator shall repair each defect detected during an inspection performed in accordance with the requirements of paragraph (b)(1), (b)(2), or (b)(3) of this section in the following manner:

(i) The owner or operator shall within 45 calendar days of detecting the defect either repair the defect or empty the tank and remove it from service. If within this 45-day period the defect cannot be repaired or the tank cannot be removed from service without disrupting operations at the plant site, the owner or operator is allowed two 30-day extensions. In cases when an owner or operator elects to use a 30-day extension, the owner or operator shall prepare and maintain documentation describing the defect, explaining why alternative storage capacity is not available, and specify a schedule of actions that will ensure that the control equipment will be repaired or the tank emptied as soon as possible.

(ii) When a defect is detected during an inspection of a tank that has been emptied and degassed, the owner or operator shall repair the defect before refilling the tank.

(c) Owners and operators that use a closed-vent system in accordance with the provisions of § 63.693 of this subpart shall meet the following inspection and monitoring requirements:

(1) Each closed-vent system that is used to comply with § 63.693(c)(1)(i) of this subpart shall be inspected and monitored in accordance with the following requirements:

(i) At initial startup, the owner or operator shall monitor the closed-vent system components and connections using the procedures specified in § 63.694(k) of this subpart to demonstrate that the closed-vent system operates with no detectable organic emissions.

(ii) After initial startup, the owner or operator shall inspect and monitor the closed-vent system as follows:

(A) Closed-vent system joints, seams, or other connections that are permanently or semi-permanently sealed (e.g., a welded joint between two sections of hard piping or a bolted and gasketed ducting flange) shall be visually inspected at least once per year to check for defects that could result in air emissions. The owner or operator shall monitor a component or connection using the procedures specified in § 63.694(k) of this subpart to demonstrate that it operates with no detectable organic emissions following any time the component is repaired or replaced (e.g., a section of damaged hard piping is replaced with new hard piping) or the connection is unsealed (e.g., a flange is unbolted).

(B) Closed-vent system components or connections other than those specified in paragraph (c)(1)(ii)(A) of this section, shall be monitored at least once per year using the procedures specified in § 63.694(k) of this subpart to demonstrate that components or connections operate with no detectable organic emissions.

(iii) In the event that a defect or leak is detected, the owner or operator shall repair the defect or leak in accordance with the requirements of paragraph (c)(3) of this section.

(iv) The owner or operator shall maintain a record of the inspection and monitoring in accordance with the requirements specified in § 63.696 of this subpart.

(2) Each closed-vent system that is used to comply with § 63.693(c)(1)(ii) of this subpart shall be inspected and monitored in accordance with the following requirements:

(i) The closed-vent system shall be visually inspected by the owner or operator to check for defects that could result in air emissions. Defects include, but are not limited to, visible cracks, holes, or gaps in ductwork or piping; loose connections; or broken or missing caps or other closure devices.

(ii) The owner or operator must perform an initial inspection following installation of the closed-vent system. Thereafter, the owner or operator must perform the inspections at least once every calendar year except as provided for in paragraph (f) of this section.

(iii) In the event that a defect is detected, the owner or operator shall repair the defect in accordance with the requirements of paragraph (c)(3) of this section.

(iv) The owner or operator shall maintain a record of the inspection in accordance with the requirements specified in § 63.696 of this subpart.

(3) The owner or operator shall repair all detected defects as follows:

(i) The owner or operator shall make first efforts at repair of the defect no later than 5 calendar days after detection and repair shall be completed as soon as possible but no later than 45 calendar days after detection.

(ii) Repair of a defect may be delayed beyond 45 calendar days if either of the conditions specified in paragraph (c)(3)(ii)(A) or (c)(3)(ii)(B) occurs. In this case, the owner or operator must repair the defect the next time the process or unit that vents to the closed-vent system is shutdown. Repair of the defect must be completed before the process or unit resumes operation.

(A) Completion of the repair is technically infeasible without the shutdown of the process or unit that vents to the closed-vent system.

(B) The owner or operator determines that the air emissions resulting from the repair of the defect within the specified period would be greater than the fugitive emissions likely to result by delaying the repair until the next time the process or unit that vents to the closed-vent system is shutdown.

(iii) The owner or operator shall maintain a record of the defect repair in accordance with the requirements specified in § 63.696 of this subpart.

(d) Owners and operators that use a transfer system equipped with a cover in accordance with the provisions of § 63.689(c)(1) of this subpart shall meet the following inspection requirements:

(1) The cover and its closure devices shall be visually inspected by the owner or operator to check for defects that

could result in air emissions. Defects include, but are not limited to, visible cracks, holes, or gaps in the cover sections or between the cover and its mounting; broken, cracked, or otherwise damaged seals or gaskets on closure devices; and broken or missing hatches, access covers, caps, or other closure devices. In the case when a transfer system is buried partially or entirely underground, inspection is required only for those portions of the cover that extend to or above the ground surface, and those connections that are on such portions of the cover (e.g., access hatches, etc.) and can be opened to the atmosphere.

(2) The owner or operator must perform an initial inspection following installation of the cover. Thereafter, the owner or operator must perform the inspections at least once every calendar year except as provided for in paragraph (f) of this section.

(3) In the event that a defect is detected, the owner or operator shall repair the defect in accordance with the requirements of paragraph (d)(5) of this section.

(4) The owner or operator shall maintain a record of the inspection in accordance with the requirements specified in § 63.696 of this subpart.

(5) The owner or operator shall repair all detected defects as follows:

(i) The owner or operator shall make first efforts at repair of the defect no later than 5 calendar days after detection and repair shall be completed as soon as possible but no later than 45 calendar days after detection except as provided in paragraph (d)(5)(ii) of this section.

(ii) Repair of a defect may be delayed beyond 45 calendar days if the owner or operator determines that repair of the defect requires emptying or temporary removal from service of the transfer system and no alternative transfer system is available at the site to accept the material normally handled by the system. In this case, the owner or operator shall repair the defect the next time the process or unit that is generating the material handled by the transfer system stops operation. Repair of the defect must be completed before the process or unit resumes operation.

(iii) The owner or operator shall maintain a record of the defect repair in accordance with the requirements specified in § 63.696 of this subpart.

(e) *Control device monitoring requirements.* For each control device required under § 63.693 of this subpart to be monitored in accordance with the provisions of this paragraph (e), the owner or operator must ensure that each control device operates properly by monitoring the control device in accordance with the requirements specified in paragraphs (e)(1) through (e)(7) of this section.

(1) A continuous parameter monitoring system must be used to measure the operating parameter or parameters specified for the control device in § 63.693(d) through § 63.693(g) of this subpart as applicable to the type and design of the control device. The continuous parameter monitoring system must meet the following specifications and requirements:

(i) The continuous parameter monitoring system must measure either an instantaneous value at least once every 15 minutes or an average value for intervals of 15 minutes or less and continuously record either:

(A) Each measured data value; or

(B) Each block average value for each 1-hour period or shorter periods calculated from all measured data values during each period. If values are measured more frequently than once per minute, a single value for each minute may be used to calculate the hourly (or shorter period) block average instead of all measured values.

(ii) The monitoring system must be installed, calibrated, operated, and maintained in accordance with the manufacturer's specifications or other written procedures that provide reasonable assurance that the monitoring equipment is operating properly.

(2) Using the data recorded by the monitoring system, the owner or operator must calculate the daily average value for each monitored operating parameter for each operating day. If operation of the control device is continuous, the operating day is a 24-hour period. If control device operation is not continuous, the operating day is the total number of hours of control device operation per 24-hour period. Valid data points must be available for 75 percent of the operating hours in an operating day to compute the daily average.

(3) For each monitored operating parameter, the owner or operator must establish a minimum operating parameter value or a maximum operating parameter value, as appropriate, to define the range of conditions at which the control device must be operated to continuously achieve the applicable performance requirements specified in § 63.693(b)(2) of this subpart. Each minimum or maximum operating parameter value must be established in accordance with the requirements in paragraphs (e)(3)(i) and (e)(3)(ii) of this section.

(i) If the owner or operator conducts a performance test to demonstrate control device performance, then the minimum or maximum operating parameter value must be established based on values measured during the performance test and supplemented, as necessary, by the control device design specifications, manufacturer recommendations, or other applicable information.

(ii) If the owner or operator uses a control device design analysis to demonstrate control device performance, then the minimum or maximum operating parameter value must be established based on the control device design analysis and supplemented, as necessary, by the control device manufacturer recommendations or other applicable information.

(4) An excursion for a given control device is determined to have occurred when the monitoring data or lack of monitoring data result in any one of the criteria specified in paragraphs (e)(4)(i) through (e)(4)(iii) of this section being met. When multiple operating parameters are monitored for the same control device and during the same operating day more than one of these operating parameters meets an excursion criterion specified in paragraphs (e)(4)(i) through (e)(4)(iii) of this section, then a single excursion is determined to have occurred for the control device for that operating day.

(i) An excursion occurs when the daily average value of a monitored operating parameter is less than the minimum operating parameter limit (or, if applicable, greater than the maximum operating parameter limit) established for the operating parameter in accordance with the requirements of paragraph (e)(3) of this section.

(ii) An excursion occurs when the period of control device operation is 4 hours or greater in an operating day and the monitoring data are insufficient to constitute a valid hour of data for at least 75 percent of the operating hours. Monitoring data are insufficient to constitute a valid hour of data if measured values are unavailable for any of the 15-minute periods within the hour.

(iii) An excursion occurs when the period of control device operation is less than 4 hours in an operating day and more than 1 of the hours during the period does not constitute a valid hour of data due to insufficient monitoring data. Monitoring data are insufficient to constitute a valid hour of data if measured values are unavailable for any of the 15-minute periods within the hour.

(5) For each excursion, except as provided for in paragraph(e)(6) of this section, the owner or operator shall be deemed to have failed to have applied control in a manner that achieves the required operating parameter limits. Failure to achieve the required operating parameter limits is a violation of this standard.

(6) An excursion is not a violation of this standard under any one of the conditions specified in paragraphs (e)(6)(i) and (e)(6)(ii) of this section.

(i) An excursion is not a violation nor does it count toward the number of excused excursions allowed under paragraph (e)(6)(ii) of this section when the excursion occurs during any one of the following periods:

(A) During a period of startup, shutdown, or malfunction when the affected facility is operated during such period in accordance with the facility's startup, shutdown, and malfunction plan; or

(B) During periods of non-operation of the unit or the process that is vented to the control device (resulting in cessation of HAP emissions to which the monitoring applies).

(ii) For each control device, one excused excursion is allowed per semiannual period for any reason. The initial semiannual period is the 6-month reporting period addressed by the first semiannual report submitted by the owner or operator in accordance with § 63.697(b)(4) of this subpart.

(7) Nothing in paragraphs (e)(1) through (e)(6) of this section shall be construed to allow or excuse a monitoring parameter excursion caused by any activity that violates other applicable provisions of this subpart.

(f) *Alternative inspection and monitoring interval.* Following the initial inspection and monitoring of a piece of air pollution control equipment in accordance with the applicable provisions of this section, subsequent inspection and monitoring of the equipment may be performed at intervals longer than 1 year when an owner or operator determines that performing the required inspection or monitoring procedures would expose a worker to dangerous, hazardous, or otherwise unsafe conditions and the owner or operator complies with the requirements specified in paragraphs (f)(1) and (f)(2) of this section.

(1) The owner or operator must prepare and maintain at the plant site written documentation identifying the specific air pollution control equipment designated as "unsafe to inspect and monitor." The documentation must include for each piece of air pollution control equipment designated as such a written explanation of the reasons why the equipment is unsafe to inspect or monitor using the applicable procedures under this section.

(2) The owner or operator must develop and implement a written plan and schedule to inspect and monitor the air pollution control equipment using the applicable procedures specified in this section during times when a worker can safely access the air pollution control equipment. The required inspections and monitoring must be performed as frequently as practicable but do not need to be performed more frequently than the periodic schedule that would be otherwise applicable to the air pollution control equipment under the provisions of this section. A copy of the written plan and schedule must be maintained at the plant site.

16. Section 63.697 is amended by revising paragraphs (a) and (b) to read as follows:

§ 63.697 Reporting requirements.

(a) Each owner or operator of an affected source subject to this subpart must comply with the notification requirements specified in paragraph (a)(1) of this section and the reporting requirements specified in paragraph (a)(2) of this section.

(1) The owner or operator of an affected source must submit notices to the Administrator in accordance with the applicable notification requirements in 40 CFR 63.9 as specified in Table 2 of this subpart. For the purpose of this subpart, an owner or operator subject to the initial notification requirements under 40 CFR 63.9(b)(2) must submit the required notification on or before October 19, 1999.

(2) The owner or operator of an affected source must submit reports to the Administrator in accordance with the applicable reporting requirements in 40 CFR 63.10 as specified in Table 2 of this subpart.

(b) The owner or operator of a control device used to meet the requirements of § 63.693 of this subpart shall submit the following notifications and reports to the Administrator:

(1) A Notification of Performance Tests specified in § 63.7 and § 63.9(g) of this part.

(2) Performance test reports specified in § 63.10(d)(2) of this part, and

(3) Startup, shutdown, and malfunction reports specified in § 63.10(d)(5) of this part.

(i) If actions taken by an owner or operator during a startup, shutdown, or malfunction of an affected source (including actions taken to correct a malfunction) are not completely consistent with the procedures specified in the source's startup, shutdown, and malfunction plan specified in § 63.6(e)(3) of this part, the owner or operator shall state such information in the report. The startup, shutdown, or malfunction report shall consist of a letter, containing the name, title, and signature of the responsible official who is certifying its accuracy, that shall be submitted to the Administrator, and

(ii) Separate startup, shutdown, or malfunction reports are not required if the information is included in the summary report specified in paragraph (b)(4) of this section.

(4) A summary report specified in § 63.10(e)(3) of this part shall be submitted on a semiannual basis (i.e., once every 6-month period). The summary report must include a description of all excursions as defined in § 63.695(e) of this subpart that have occurred during the 6-month reporting period. For each excursion caused when the daily average value of a monitored operating parameter is less than the minimum operating parameter limit (or, if applicable, greater than the maximum operating parameter limit), the report must include the daily average values of the monitored parameter, the applicable operating parameter limit, and the date and duration of the period that the exceedance occurred. For each excursion caused by lack of monitoring data, the report must include the date and duration of period when the monitoring data were not collected and the reason why the data were not collected.

* * * * *

17. Table 1 in Subpart DD is revised to read as follows:

TABLE 1 TO SUBPART DD—LIST OF HAZARDOUS AIR POLLUTANTS (HAP) FOR SUBPART DD

CAS No.[a]	Chemical name	$f_{m\ 305}$
75-07-0	Acetaldehyde	1.000
75-05-8	Acetonitrile	0.989
98-86-2	Acetophenone	0.314

TABLE 1 TO SUBPART DD—LIST OF HAZARDOUS AIR POLLUTANTS (HAP) FOR SUBPART DD—Continued

CAS No.[a]	Chemical name	$f_{m,305}$
107-02-8	Acrolein	1.000
107-13-1	Acrylonitrile	0.999
107-05-1	Allyl chloride	1.000
71-43-2	Benzene (includes benzene in gasoline)	1.000
98-07-7	Benzotrichloride (isomers and mixture)	0.958
100-44-7	Benzyl chloride	1.000
92-52-4	Biphenyl	0.864
542-88-1	Bis(chloromethyl)ether[b]	0.999
75-25-2	Bromoform	0.998
106-99-0	1,3-Butadiene	1.000
75-15-0	Carbon disulfide	1.000
56-23-5	Carbon tetrachloride	1.000
43-58-1	Carbonyl sulfide	1.000
133-90-4	Chloramben	0.633
108-90-7	Chlorobenzene	1.000
67-66-3	Chloroform	1.000
107-30-2	Chloromethyl methyl ether[b]	1.000
126-99-8	Chloroprene	1.000
98-82-8	Cumene	1.000
94-75-7	2,4-D, salts and esters	0.167
334-88-3	Diazomethane[c]	0.999
132-64-9	Dibenzofurans	0.967
96-12-8	1,2-Dibromo-3-chloropropane	1.000
106-46-7	1,4-Dichlorobenzene(p)	1.000
107-06-2	Dichloroethane (Ethylene dichloride)	1.000
111-44-4	Dichloroethyl ether (Bis(2-chloroethyl ether)	0.757
542-75-6	1,3-Dichloropropene	1.000
79-44-7	Dimethyl carbamoyl chloride[c]	0.150
64-67-5	Diethyl sulfate	0.0025
77-78-1	Dimethyl sulfate	0.086
121-69-7	N,N-Dimethylaniline	0.0008
51-28-5	2,4-Dinitrophenol	0.0077
121-14-2	2,4-Dinitrotoluene	0.0848
123-91-1	1,4-Dioxane (1,4-Diethyleneoxide)	0.869
106-89-8	Epichlorohydrin (1-Chloro-2,3-epoxypropane)	0.939
106-88-7	1,2-Epoxybutane	1.000
140-88-5	Ethyl acrylate	1.000
100-41-4	Ethyl benzene	1.000
75-00-3	Ethyl chloride (Chloroethane)	1.000
106-93-4	Ethylene dibromide (Dibromoethane)	0.999
107-06-2	Ethylene dichloride (1,2-Dichloroethane)	1.000
151-56-4	Ethylene imine (Aziridine)	0.867
75-21-8	Ethylene oxide	1.000
75-34-3	Ethylidene dichloride (1,1-Dichloroethane)	1.000
	Glycol ethers[d] that have a Henry's Law constant value equal to or greater than 0.1 Y/X (1.8 x 10^{-6} atm/gm-mole/m^3) at 25°C.	[e]
118-74-1	Hexachlorobenzene	0.97
87-68-3	Hexachlorobutadiene	0.88
67-72-1	Hexachloroethane	0.499
110-54-3	Hexane	1.000
78-59-1	Isophorone	0.506
58-89-9	Lindane (all isomers)	1.000
67-56-1	Methanol	0.855
74-83-9	Methyl bromide (Bromomethane)	1.000
74-87-3	Methyl chloride (Choromethane)	1.000
71-55-6	Methyl chloroform (1,1,1-Trichloroethane)	1.000
78-93-3	Methyl ethyl ketone (2-Butanone)	0.990
74-88-4	Methyl iodide (Iodomethane)	1.0001
108-10-1	Methyl isobutyl ketone (Hexone)	0.9796
624-83-9	Methyl isocyanate	1.000
80-62-6	Methyl methacrylate	0.916
1634-04-4	Methyl tert butyl ether	1.000
75-09-2	Methylene chloride (Dichloromethane)	1.000
91-20-3	Naphthalene	0.994
98-95-3	Nitrobenzene	0.394
79-46-9	2-Nitropropane	0.989
82-68-8	Pentachloronitrobenzene (Quintobenzene)	0.839
87-86-5	Pentachlorophenol	0.0898
75-44-5	Phosgene[c]	1.000
123-38-6	Propionaldehyde	0.999
78-87-5	Propylene dichloride (1,2-Dichloropropane)	1.000
75-56-9	Propylene oxide	1.000

TABLE 1 TO SUBPART DD—LIST OF HAZARDOUS AIR POLLUTANTS (HAP) FOR SUBPART DD—Continued

CAS No.[a]	Chemical name	$f_{m\ 305}$
75–55–8	1,2–Propylenimine (2–Methyl aziridine)	0.945
100–42–5	Styrene	1.000
96–09–3	Styrene oxide	0.830
79–34–5	1,1,2,2–Tetrachloroethane	0.999
127–18–4	Tetrachloroethylene (Perchloroethylene)	1.000
108–88–3	Toluene	1.000
95–53–4	o-Toluidine	0.152
120–82–1	1,2,4–Trichlorobenzene	1.000
71–55–6	1,1,1–Trichloroethane (Methyl chloroform)	1.000
79–00–5	1,1,2–Trichloroethane (Vinyl trichloride)	1.000
79–01–6	Trichloroethylene	1.000
95–95–4	2,4,5–Trichlorophenol	0.108
88–06–2	2,4,6–Trichlorophenol	0.132
121–44–8	Triethylamine	1.000
540–84–1	2,2,4–Trimethylpentane	1.000
108–05–4	Vinyl acetate	1.000
593–60–2	Vinyl bromide	1.000
75–01–4	Vinyl chloride	1.000
75–35–4	Vinylidene chloride (1,1–Dichloroethylene)	1.000
1330–20–7	Xylenes (isomers and mixture)	1.000
95–47–6	o-Xylenes	1.000
108–38–3	m-Xylenes	1.000
106–42–3	p-Xylenes	1.000

Notes:

$f_{m\ 305}$ = Method 305 fraction measure factor.

a. CAS numbers refer to the Chemical Abstracts Services registry number assigned to specific compounds, isomers, or mixtures of compounds.

b. Denotes a HAP that hydrolyzes quickly in water, but the hydrolysis products are also HAP chemicals.

c. Denotes a HAP that may react violently with water, exercise caustic is an expected analyte.

d. Denotes a HAP that hydrolyzes slowly in water.

e. The f_{m305} factors for some of the more common glycol ethers can be obtained by contacting the Waste and Chemical Processes Group, Office of Air Quality Planning and Standards, Research Triangle Park, NC 27711.

18. Table 2 in Subpart DD is revised to read as follows:

TABLE 2 TO SUBPART DD—APPLICABILITY OF PARAGRAPHS IN SUBPART A OF THIS PART 63—GENERAL PROVISIONS TO SUBPART DD

Subpart A reference	Applies to Subpart DD	Explanation
63.1(a)(1)	Yes	
63.1(a)(2)	Yes	
63.1(a)(3)	Yes	
63.1(a)(4)	No	Subpart DD (this table) specifies applicability of each paragraph in subpart A to subpart DD.
63.1(a)(5)–63.1(a)(9)	No	
63.1(a)(10)	Yes	
63.1(a)(11)	Yes	
63.1(a)(12)	Yes	
63.1(a)(13)	Yes	
63.1(a)(14)	Yes	
63.1(b)(1)	No	Subpart DD specifies its own applicability.
63.1(b)(2)	Yes	
63.1(b)(3)	No	
63.1(c)(1)	No	Subpart DD explicitly specifies requirements that apply.
63.1(c)(2)	No	Area sources are not subject to subpart DD.
63.1(c)(3)	No	
63.1(c)(4)	Yes	
63.1(c)(5)	Yes	Except that sources are not required to submit notifications overridden by this table.
63.1(d)	No	
63.1(e)	No	
63.2	Yes	§63.681 of subpart DD specifies that if the same term is defined in subparts A and DD, it shall have the meaning given in subpart DD.
63.3	Yes	
63.4(a)(1)–63.4(a)(3)	Yes	
63.4(a)(4)	No	Reserved.
63.4(a)(5)	Yes	
63.4(b)	Yes	

TABLE 2 TO SUBPART DD—APPLICABILITY OF PARAGRAPHS IN SUBPART A OF THIS PART 63—GENERAL PROVISIONS TO SUBPART DD—Continued

Subpart A reference	Applies to Subpart DD	Explanation
63.4(c)	Yes	
63.5(a)(1)	Yes	Except replace term "source" and "stationary source" in § 63.5(a)(1) of subpart A with "affected source."
63.5(a)(2)	Yes	
63.5(b)(1)	Yes	
63.5(b)(2)	No	Reserved.
63.5(b)(3)	Yes	
63.5(b)(4)	Yes	Except the cross-reference to § 63.9(b) is changed to § 63.9(b)(4) and (5). Subpart DD overrides § 63.9(b)(2) and (b)(3).
63.5(b)(5)	Yes	
63.5(b)(6)	Yes	
63.5(c)	No	Reserved.
63.5(d)(1)(i)	Yes	
63.5(d)(1)(ii)	Yes	
63.5(d)(1)(iii)	Yes	
63.5(d)(2)	No	
63.5(d)(3)	Yes	
63.5(d)(4)	Yes	
63.5(e)	Yes	
63.5(f)(1)	Yes	
63.5(f)(2)	Yes	
63.6(a)	Yes	
63.6(b)(1)	No	Subpart DD specifies compliance dates for sources subject to subpart DD.
63.6(b)(2)	No	
63.6(b)(3)	Yes	
63.6(b)(4)	No	May apply when standards are proposed under section 112(f) of the Clean Air Act.
63.6(b)(5)	No	§ 63.697 of subpart DD includes notification requirements.
63.6(b)(6)	No	
63.6(b)(7)	No	
63.6(c)(1)	No	§ 63.680 of subpart DD specifies the compliance date.
63.6(c)(2)–63.6(c)(4)	No	
63.6(c)(5)	Yes	
63.6(d)	No	
63.6(e)	Yes	
63.6(f)(1)	Yes	
63.6(f)(2)(i)	Yes	
63.6(f)(2)(ii)	Yes	Subpart DD specifies the use of monitoring data in determining compliance with subpart DD.
63.6(f)(2)(iii) (A), (B), and (C)	Yes	
63.6(f)(2)(iii) (D)	No	
63.6(f)(2)(iv)	Yes	
63.6(f)(2)(v)	Yes	
63.6(f)(3)	Yes	
63.6(g)	Yes	
63.6(h)	No	Subpart DD does not require opacity and visible emission standards.
63.6(i)	Yes	Except for § 63.6(i)(15), which is reserved.
63.6(j)	Yes	
63.7(a)(1)	No	Subpart DD specifies required testing and compliance demonstration procedures.
63.7(a)(2)	Yes	
63.7(a)(3)	Yes	
63.7(b)	No	
63.7(c)	No	
63.7(d)	Yes	
63.7(e)(1)	Yes	
63.7(e)(2)	Yes	
63.7(e)(3)	No	Subpart DD specifies test methods and procedures.
63.7(e)(4)	Yes	
63.7(f)	No	Subpart DD specifies applicable methods and provides alternatives.
63.7(g)	Yes	
63.7(h)(1)	Yes	
63.7(h)(2)	Yes	
63.7(h)(3)	Yes	
63.7(h)(4)	No	
63.7(h)(5)	Yes	
63.8(a)	No	
63.8(b)(1)	Yes	
63.8(b)(2)	No	Subpart DD specifies locations to conduct monitoring.
63.8(b)(3)	Yes	

TABLE 2 TO SUBPART DD—APPLICABILITY OF PARAGRAPHS IN SUBPART A OF THIS PART 63—GENERAL PROVISIONS TO SUBPART DD—Continued

Subpart A reference	Applies to Subpart DD	Explanation
63.8(c)(1)(i)	Yes	
63.8(c)(1)(ii)	Yes	
63.8(c)(1)(iii)	Yes	
63.8(c)(2)	Yes	
63.8(c)(3)	Yes	
63.8(c)(4)	No	Subpart DD specifies monitoring frequency
63.8(c)(5)–63.8(c)(8)	No	
63.8(d)	No	
63.8(e)	No	
63.8(f)(1)	Yes	
63.8(f)(2)	Yes	
63.8(f)(3)	Yes	
63.8(f)(4)(i)	Yes	
63.8(f)(4)(ii)	Yes	
63.8(f)(4)(iii)	No	
63.8(f)(5)(i)	Yes	
63.8(f)(5)(ii)	No	
63.8(f)(5)(iii)	Yes	
63.8(f)(6)	Yes	
63.8(g)	Yes	
63.9(a)	Yes	
63.9(b)(1)(i)	Yes	
63.9(b)(1)(ii)	No	
63.9(b)(2)	Yes	
63.9(b)(3)	No	
63.9(b)(4)	Yes	
63.9(b)(5)	Yes	
63.9(c)	Yes	
63.9(d)	Yes	
63.9(e)	No	
63.9(f)	No	
63.9(g)	No	
63.9(h)	Yes	
63.9(i)	Yes	
63.9(j)	No	
63.10(a)	Yes	
63.10(b)(1)	Yes	
63.10(b)(2)(i)	Yes	
63.10(b)(2)(ii)	Yes	
63.10(b)(2)(iii)	No	
63.10(b)(2)(iv)	Yes	
63.10(b)(2)(v)	Yes	
63.10(b)(2)(vi)–(ix)	Yes	
63.10(b)(2)(x)	Yes	
63.10(b)(2) (xii)–(xiv)	No	
63.10(b)(3)	Yes	
63.10(c)	No	
63.10(d)(1)	No	
63.10(d)(2)	Yes	
63.10(d)(3)	No	
63.10(d)(4)	Yes	
63.10(d)(5)(i)	Yes	
63.10(d)(5)(ii)	Yes	
63.10(e)	No	
63.10(f)	Yes	
63.11–63.15	Yes	

[a] Wherever subpart A specifies "postmark" dates, submittals may be sent by methods other than the U.S. Mail (e.g., by fax or courier). Submittals shall be sent by the specified dates, but a postmark is not required.

Subpart OO—National Emission Standards for Tanks—Level 1

19. Section 63.901 is amended by revising the definition of "Safety device" to read as follows:

§ 63.901 Definitions.

* * * * *

Safety device means a closure device such as a pressure relief valve, frangible disc, fusible plug, or any other type of device which functions to prevent physical damage or permanent deformation to equipment by venting gases or vapors during unsafe conditions resulting from an unplanned, accidental, or emergency event. For the purpose of this subpart, a safety device is not used for routine venting of gases or vapors from the vapor headspace underneath a cover such as during filling of the unit or to adjust the pressure in this vapor headspace in response to normal daily diurnal

ambient temperature fluctuations. A safety device is designed to remain in a closed position during normal operations and open only when the internal pressure, or another relevant parameter, exceeds the device threshold setting applicable to the equipment as determined by the owner or operator based on manufacturer recommendations, applicable regulations, fire protection and prevention codes, standard engineering codes and practices, or other requirements for the safe handling of flammable, combustible, explosive, reactive, or hazardous materials.

* * * * *

20. Section 63.902 is amended by revising paragraphs (a) and (b)(3) introductory text to read as follows:

§ 63.902 Standards—Tank fixed roof.

(a) This section applies to owners and operators subject to this subpart and controlling air emissions from a tank using a fixed roof. This section does not apply to a fixed-roof tank that is also equipped with an internal floating roof.

(b) * * *

(3) Each opening in the fixed roof, and any manifold system associated with the fixed roof, shall be either:

* * * * *

21. Section 63.905 is revised to read as follows:

§ 63.905 Test methods and procedures.

(a) Procedure for determining no detectable organic emissions for the purpose of complying with this subpart.

(1) The test shall be conducted in accordance with the procedures specified in Method 21 of 40 CFR part 60, appendix A. Each potential leak interface (i.e., a location where organic vapor leakage could occur) on the cover and associated closure devices shall be checked. Potential leak interfaces that are associated with covers and closure devices include, but are not limited to: the interface of the cover and its foundation mounting; the periphery of any opening on the cover and its associated closure device; and the sealing seat interface on a spring-loaded pressure-relief valve.

(2) The test shall be performed when the unit contains a material having a total organic concentration representative of the range of concentrations for the materials expected to be managed in the unit. During the test, the cover and closure devices shall be secured in the closed position.

(3) The detection instrument shall meet the performance criteria of Method 21 of 40 CFR part 60, appendix A, except the instrument response factor criteria in section 3.1.2(a) of Method 21 shall be for the average composition of the organic constituents in the material placed in the unit, not for each individual organic constituent.

(4) The detection instrument shall be calibrated before use on each day of its use by the procedures specified in Method 21 of 40 CFR part 60, appendix A.

(5) Calibration gases shall be as follows:

(i) Zero air (less than 10 ppmv hydrocarbon in air); and

(ii) A mixture of methane or n-hexane in air at a concentration of approximately, but less than 10,000 ppmv.

(6) An owner or operator may choose to adjust or not adjust the detection instrument readings to account for the background organic concentration level. If an owner or operator chooses to adjust the instrument readings for the background level, the background level value must be determined according to the procedures in Method 21 of 40 CFR part 60, appendix A.

(7) Each potential leak interface shall be checked by traversing the instrument probe around the potential leak interface as close to the interface as possible, as described in Method 21. In the case when the configuration of the cover or closure device prevents a complete traverse of the interface, all accessible portions of the interface shall be sampled. In the case when the configuration of the closure device prevents any sampling at the interface and the device is equipped with an enclosed extension or horn (e.g., some pressure relief devices), the instrument probe inlet shall be placed at approximately the center of the exhaust area to the atmosphere.

(8) An owner or operator must determine if a potential leak interface operates with no detectable emissions using the applicable procedure specified in paragraph (a)(8)(i) or (a)(8)(ii) of this section.

(i) If an owner or operator chooses not to adjust the detection instrument readings for the background organic concentration level, then the maximum organic concentration value measured by the detection instrument is compared directly to the applicable value for the potential leak interface as specified in paragraph (a)(9) of this section.

(ii) If an owner or operator chooses to adjust the detection instrument readings for the background organic concentration level, the value of the arithmetic difference between the maximum organic concentration value measured by the instrument and the background organic concentration value as determined in paragraph (a)(6) of this section is compared with the applicable value for the potential leak interface as specified in paragraph (a)(9) of this section.

(9) A potential leak interface is determined to operate with no detectable emissions using the applicable criteria specified in paragraphs (a)(9)(i) and (a)(9)(ii) of this section.

(i) For a potential leak interface other than a seal around a shaft that passes through a cover opening, the potential leak interface is determined to operate with no detectable organic emissions if the organic concentration value determined in paragraph (a)(8) is less than 500 ppmv.

(ii) For a seal around a shaft that passes through a cover opening, the potential leak interface is determined to operate with no detectable organic emissions if the organic concentration value determined in paragraph (a)(8) is less than 10,000 ppmv.

(b) [Reserved]

22. Section 63.906 is amended by revising paragraphs (a)(2) and (b)(2), and adding paragraph (d) to read as follows:

§ 63.906 Inspection and monitoring requirements.

(a) * * *

(2) The owner or operator must perform an initial inspection following installation of the fixed roof. Thereafter, the owner or operator must perform the inspections at least once every calendar year except as provided for in paragraph (d) of this section.

* * * * *

(b) * * *

(2) Repair of a defect may be delayed beyond 45 calendar days if the owner or operator determines that repair of the defect requires emptying or temporary removal from service of the tank and no alternative tank capacity is available at the site to accept the regulated material normally managed in the tank. In this case, the owner or operator shall repair the defect the next time alternative tank capacity becomes available and the tank can be emptied or temporarily removed from service, as necessary to complete the repair.

* * * * *

(d) *Alternative inspection and monitoring interval.* Following the initial inspection and monitoring of a fixed roof in accordance with this section, subsequent inspection and monitoring of the equipment may be performed at intervals longer than 1 year when an owner or operator determines that performing the required inspection or monitoring procedures would expose a worker to dangerous,

hazardous, or otherwise unsafe conditions and the owner or operator complies with the requirements specified in paragraphs (d)(1) and (d)(2) of this section.

(1) The owner or operator must prepare and maintain at the plant site written documentation identifying the specific air pollution control equipment designated as "unsafe to inspect and monitor." The documentation must include for each piece of air pollution control equipment designated as such a written explanation of the reasons why the equipment is unsafe to inspect or monitor using the applicable procedures under this section.

(2) The owner or operator must develop and implement a written plan and schedule to inspect and monitor the air pollution control equipment using the applicable procedures specified in this section during times when a worker can safely access the air pollution control equipment. The required inspections and monitoring must be performed as frequently as practicable but do not need to be performed more frequently than the periodic schedule that would be otherwise applicable to the air pollution control equipment under the provisions of this section. A copy of the written plan and schedule must be maintained at the plant site.

Subpart PP—National Emission Standards for Containers

23. Section 63.921 is amended by revising the definitions of "Empty container" and "Safety device" to read as follows:

§ 63.921 Definitions.

* * * * *

Empty container means a container for which either of the following conditions exists: the container meets the conditions for an empty container specified in 40 CFR 261.7(b); or all regulated-material has been removed from the container except for any regulated-material that remains on the interior surfaces of the container as clingage or in pools on the container bottom due to irregularities in the container.

* * * * *

Safety device means a closure device such as a pressure relief valve, frangible disc, fusible plug, or any other type of device which functions to prevent physical damage or permanent deformation to equipment by venting gases or vapors during unsafe conditions resulting from an unplanned, accidental, or emergency event. For the purpose of this subpart, a safety device is not used for routine venting of gases or vapors from the vapor headspace underneath a cover such as during filling of the unit or to adjust the pressure in this vapor headspace in response to normal daily diurnal ambient temperature fluctuations. A safety device is designed to remain in a closed position during normal operations and open only when the internal pressure, or another relevant parameter, exceeds the device threshold setting applicable to the equipment as determined by the owner or operator based on manufacturer recommendations, applicable regulations, fire protection and prevention codes, standard engineering codes and practices, or other requirements for the safe handling of flammable, combustible, explosive, reactive, or hazardous materials.

24. Section 63.925 is amended by revising paragraph (a) to read as follows:

§ 63.925 Test methods and procedures.

(a) Procedures for determining no detectable organic emissions for the purpose of complying with this subpart.

(1) The test shall be conducted in accordance with the procedures specified in Method 21 of 40 CFR part 60, appendix A. Each potential leak interface (i.e., a location where organic vapor leakage could occur) on the cover and associated closure devices shall be checked. Potential leak interfaces that are associated with covers and closure devices include, but are not limited to: the interface of the cover and its foundation mounting; the periphery of any opening on the cover and its associated closure device; and the sealing seat interface on a spring-loaded pressure-relief valve.

(2) The test shall be performed when the unit contains a material having a total organic concentration representative of the range of concentrations for the materials expected to be managed in the unit. During the test, the cover and closure devices shall be secured in the closed position.

(3) The detection instrument shall meet the performance criteria of Method 21 of 40 CFR part 60, appendix A, except the instrument response factor criteria in section 3.1.2(a) of Method 21 shall be for the average composition of the organic constituents in the material placed in the unit, not for each individual organic constituent.

(4) The detection instrument shall be calibrated before use on each day of its use by the procedures specified in Method 21 of 40 CFR part 60, appendix A.

(5) Calibration gases shall be as follows:

(i) Zero air (less than 10 ppmv hydrocarbon in air); and

(ii) A mixture of methane or n-hexane in air at a concentration of approximately, but less than 10,000 ppmv.

(6) An owner or operator may choose to adjust or not adjust the detection instrument readings to account for the background organic concentration level. If an owner or operator chooses to adjust the instrument readings for the background level, the background level value must be determined according to the procedures in Method 21 of 40 CFR part 60, appendix A.

(7) Each potential leak interface shall be checked by traversing the instrument probe around the potential leak interface as close to the interface as possible, as described in Method 21. In the case when the configuration of the cover or closure device prevents a complete traverse of the interface, all accessible portions of the interface shall be sampled. In the case when the configuration of the closure device prevents any sampling at the interface and the device is equipped with an enclosed extension or horn (e.g., some pressure relief devices), the instrument probe inlet shall be placed at approximately the center of the exhaust area to the atmosphere.

(8) An owner or operator must determine if a potential leak interface operates with no detectable emissions using the applicable procedure specified in paragraph (a)(8)(i) or (a)(8)(ii) of this section.

(i) If an owner or operator chooses not to adjust the detection instrument readings for the background organic concentration level, then the maximum organic concentration value measured by the detection instrument is compared directly to the applicable value for the potential leak interface as specified in paragraph (a)(9) of this section.

(ii) If an owner or operator chooses to adjust the detection instrument readings for the background organic concentration level, the value of the arithmetic difference between the maximum organic concentration value measured by the instrument and the background organic concentration value as determined in paragraph (a)(6) of this section is compared with the applicable value for the potential leak interface as specified in paragraph (a)(9) of this section.

(9) A potential leak interface is determined to operate with no detectable emissions using the applicable criteria specified in paragraphs (a)(9)(i) and (a)(9)(ii) of this section.

(i) For a potential leak interface other than a seal around a shaft that passes through a cover opening, the potential leak interface is determined to operate with no detectable organic emissions if the organic concentration value determined in paragraph (a)(8) is less than 500 ppmv.

(ii) For a seal around a shaft that passes through a cover opening, the potential leak interface is determined to operate with no detectable organic emissions if the organic concentration value determined in paragraph (a)(8) is less than 10,000 ppmv.

* * * * *

25. Section 63.926 is amended by revising paragraph (a) to read as follows:

§ 63.926 Inspection and monitoring requirements.

(a) Owners and operators of containers using either Container Level 1 or Container Level 2 controls in accordance with the provisions of § 63.922 and § 63.923 of this subpart, respectively, shall inspect the container and its cover and closure devices as follows:

(1) In the case when a regulated-material already is in the container at the time the owner or operator first accepts possession of the container at the facility site and the container is not emptied (i.e., does not meet the conditions for an empty container as defined in § 63.921 of this subpart) within 24 hours after the container has been accepted at the facility site, the container and its cover and closure devices shall be visually inspected by the owner or operator to check for visible cracks, holes, gaps, or other open spaces into the interior of the container when the cover and closure devices are secured in the closed position. This inspection of the container must be conducted on or before the date that the container is accepted at the facility (i.e., the date that the container becomes subject to the standards under this subpart). For the purpose of this requirement, the date of acceptance is the date of signature of the facility owner or operator on the manifest or shipping papers accompanying the container. If a defect is detected, the owner or operator shall repair the defect in accordance with the requirements of paragraph (a)(3) of this section.

(2) In the case when a container filled or partially filled with regulated-material remains unopened at the facility site for a period of 1 year or more, the container and its cover and closure devices shall be visually inspected by the owner or operator initially and thereafter, at least once every calendar year, to check for visible cracks, holes, gaps, or other open spaces into the interior of the container when the cover and closure devices are secured in the closed position. If a defect is detected, the owner or operator shall repair the defect in accordance with the requirements of paragraph (a)(3) of this section.

(3) When a defect is detected for the container, cover, or closure devices, the owner or operator must either empty the regulated-material from the defective container in accordance with paragraph (a)(3)(i) of this section or repair the defective container in accordance with paragraph (a)(3)(ii) of this section.

(i) If the owner or operator elects to empty the regulated-material from the defective container, the owner or operator must remove the regulated-material from the defective container to meet the conditions for an empty container (as defined in § 63.921 of this subpart) and transfer the removed regulated-material to either a container that meets the applicable standards under this subpart or to a tank, process, or treatment unit that meets the applicable standards under the subpart referencing this subpart. Transfer of the regulated-material must be completed no later than 5 calendar days after detection of the defect. The emptied defective container must be either repaired, destroyed, or used for purposes other than management of regulated-material.

(ii) If the owner or operator elects not to empty the regulated-material from the defective container, the owner or operator must repair the defective container. First efforts at repair of the defect must be made no later than 24 hours after detection and repair must be completed as soon as possible but no later than 5 calendar days after detection. If repair of a defect cannot be completed within 5 calendar days, then the regulated-material must be emptied from the container and the container must not be used to manage regulated-material until the defect is repaired.

* * * * *

Subpart QQ—National Emission Standards for Surface Impoundments

26. Section 63.941 is amended by revising the definitions of "Cover" and "Safety device" to read as follows:

§ 63.941 Definitions.

* * * * *

Cover means a device or system that provides a continuous barrier over the material managed in a surface impoundment to prevent or reduce air pollutant emissions to the atmosphere. A cover may have openings needed for operation, inspection, sampling, maintenance, and repair of the surface impoundment provided that each opening is closed when not in use (e.g., access hatches, sampling ports). Examples of a cover for a surface impoundment include, but are not limited to, a floating membrane cover placed on the surface of the material in the surface impoundment or an air-supported structure installed over the surface impoundment.

* * * * *

Safety device means a closure device such as a pressure relief valve, frangible disc, fusible plug, or any other type of device which functions to prevent physical damage or permanent deformation to equipment by venting gases or vapors during unsafe conditions resulting from an unplanned, accidental, or emergency event. For the purpose of this subpart, a safety device is not used for routine venting of gases or vapors from the vapor headspace underneath a cover such as during filling of the unit or to adjust the pressure in this vapor headspace in response to normal daily diurnal ambient temperature fluctuations. A safety device is designed to remain in a closed position during normal operations and open only when the internal pressure, or another relevant parameter, exceeds the device threshold setting applicable to the equipment as determined by the owner or operator based on manufacturer recommendations, applicable regulations, fire protection and prevention codes, standard engineering codes and practices, or other requirements for the safe handling of flammable, combustible, explosive, reactive, or hazardous materials.

* * * * *

27. Section 63.945 is revised to read as follows:

§ 63.945 Test methods and procedures.

(a) Procedure for determining no detectable organic emissions for the purpose of complying with this subpart.

(1) The test shall be conducted in accordance with the procedures specified in Method 21 of 40 CFR part 60, appendix A. Each potential leak interface (i.e., a location where organic vapor leakage could occur) on the cover and associated closure devices shall be checked. Potential leak interfaces that are associated with covers and closure devices include, but are not limited to the interface of the cover and its foundation mounting; the periphery of any opening on the cover and its associated closure device; and the

sealing seat interface on a spring-loaded pressure-relief valve.

(2) The test shall be performed when the unit contains a material having a total organic concentration representative of the range of concentrations for the materials expected to be managed in the unit. During the test, the cover and closure devices shall be secured in the closed position.

(3) The detection instrument shall meet the performance criteria of Method 21 of 40 CFR part 60, appendix A, except the instrument response factor criteria in section 3.1.2(a) of Method 21 shall be for the average composition of the organic constituents in the material placed in the unit, not for each individual organic constituent.

(4) The detection instrument shall be calibrated before use on each day of its use by the procedures specified in Method 21 of 40 CFR part 60, appendix A.

(5) Calibration gases shall be as follows:

(i) Zero air (less than 10 ppmv hydrocarbon in air); and

(ii) A mixture of methane or n-hexane in air at a concentration of approximately, but less than 10,000 ppmv.

(6) An owner or operator may choose to adjust or not adjust the detection instrument readings to account for the background organic concentration level. If an owner or operator chooses to adjust the instrument readings for the background level, the background level value must be determined according to the procedures in Method 21 of 40 CFR part 60, appendix A.

(7) Each potential leak interface shall be checked by traversing the instrument probe around the potential leak interface as close to the interface as possible, as described in Method 21. In the case when the configuration of the cover or closure device prevents a complete traverse of the interface, all accessible portions of the interface shall be sampled. In the case when the configuration of the closure device prevents any sampling at the interface and the device is equipped with an enclosed extension or horn (e.g., some pressure relief devices), the instrument probe inlet shall be placed at approximately the center of the exhaust area to the atmosphere.

(8) An owner or operator must determine if a potential leak interface operates with no detectable emissions using the applicable procedure specified in paragraph (a)(8)(i) or (a)(8)(ii) of this section.

(i) If an owner or operator chooses not to adjust the detection instrument readings for the background organic concentration level, then the maximum organic concentration value measured by the detection instrument is compared directly to the applicable value for the potential leak interface as specified in paragraph (a)(9) of this section.

(ii) If an owner or operator chooses to adjust the detection instrument readings for the background organic concentration level, the value of the arithmetic difference between the maximum organic concentration value measured by the instrument and the background organic concentration value as determined in paragraph (a)(6) of this section is compared with the applicable value for the potential leak interface as specified in paragraph (a)(9) of this section.

(9) A potential leak interface is determined to operate with no detectable emissions using the applicable criteria specified in paragraphs (a)(9)(i) and (a)(9)(ii) of this section.

(i) For a potential leak interface other than a seal around a shaft that passes through a cover opening, the potential leak interface is determined to operate with no detectable organic emissions if the organic concentration value determined in paragraph (a)(8) is less than 500 ppmv.

(ii) For a seal around a shaft that passes through a cover opening, the potential leak interface is determined to operate with no detectable organic emissions if the organic concentration value determined in paragraph (a)(8) is less than 10,000 ppmv.

(b) [Reserved]

28. Section 63.946 is amended by adding paragraph (d) and by revising paragraphs (a)(2) and (b)(1)(ii) to read as follows:

§ 63.946 Inspection and monitoring requirements.

(a) * * *

(2) The owner or operator must perform an initial inspection following installation of the floating membrane cover. Thereafter, the owner or operator must perform the inspections at least once per calendar year except as provided for in paragraph (d) of this section.

* * * * *

(b) * * *

(1) * * *

(ii) The owner or operator must perform an initial inspection following installation of the cover. Thereafter, the owner or operator must perform the inspections at least once per calendar year except as provide for in paragraph (d) of this section.

* * * * *

(d) *Alternative inspection and monitoring interval.* Following the initial inspection and monitoring of a piece of air pollution control equipment in accordance with the applicable provisions of this section, subsequent inspection and monitoring of the equipment may be performed at intervals longer than 1 year when an owner or operator determines that performing the required inspection or monitoring procedures would expose a worker to dangerous, hazardous, or otherwise unsafe conditions and the owner or operator complies with the requirements specified in paragraphs (d)(1) and (d)(2) of this section.

(1) The owner or operator must prepare and maintain at the plant site written documentation identifying the specific air pollution control equipment designated as "unsafe to inspect and monitor." The documentation must include for each piece of air pollution control equipment designated as such a written explanation of the reasons why the equipment is unsafe to inspect or monitor using the applicable procedures under this section.

(2) The owner or operator must develop and implement a written plan and schedule to inspect and monitor the air pollution control equipment using the applicable procedures specified in this section during times when a worker can safely access the air pollution control equipment. The required inspections and monitoring must be performed as frequently as practicable but do not need to be performed more frequently than the periodic schedule that would be otherwise applicable to the air pollution control equipment under the provisions of this section. A copy of the written plan and schedule must be maintained at the plant site.

Subpart RR—National Emission Standards for Individual Drain Systems

29. Section 63.961 is amended by adding in alphabetical order the definition of "Regulated-material" and by revising the definitions of "Individual drain system," "Sewer line" and "Waste management unit" to read as follows:

§ 63.961 Definitions.

* * * * *

Individual drain system means a stationary system used to convey regulated-material to a waste management unit or to discharge or disposal. The term includes hard-piping, all drains and junction boxes, together with their associated sewer lines and other junction boxes (e.g., manholes, sumps, and lift stations)

conveying regulated-material. For the purpose of this subpart, an individual drain system is not a drain and collection system that is designed and operated for the sole purpose of collecting rainfall runoff (e.g., stormwater sewer system) and is segregated from all other individual drain systems.

* * * * *

Regulated-material means the wastewater streams, residuals, and any other materials specified by the referencing subpart to be managed in accordance with the standards under this subpart.

Sewer line means a lateral, trunk line, branch line, or other conduit used to convey regulated-material to a downstream waste management unit. Sewer lines include pipes, grates, and trenches.

Waste management unit means the equipment, structure, or device used to convey, store, treat, or dispose of regulated-material. Examples of waste management units include: wastewater tanks, surface impoundments, individual drain systems, and biological wastewater treatment units. Examples of equipment that may be waste management units include containers, air flotation units, oil-water separators or organic-water separators, or organic removal devices such as decanters, strippers, or thin-film evaporation units.

* * * * *

30. Section 63.962 is amended by revising paragraph (b) to read as follows:

§ 63.962 Standards.

* * * * *

(b) Owners and operators controlling air emissions from an individual drain system in accordance with paragraph (a)(1) of this section shall meet the following requirements:

(1) The individual drain system shall be designed to segregate the organic vapors from regulated material managed in the controlled individual drain system from entering any other individual drain system that is not controlled for air emissions in accordance with the standards specified in this subpart.

(2) *Drain control requirements.* Each drain shall be equipped with either a water seal or a closure device in accordance with the following requirements:

(i) When a water seal is used, the water seal shall be designed such that either:

(A) The outlet to the pipe discharging the regulated-material extends below the liquid surface in the water seal of the drain; or

(B) A flexible shield or other device is installed which restricts wind motion across the open space between the outlet of the pipe discharging the regulated material and the drain.

(ii) When a closure device is used (e.g., securing a cap or plug on a drain that is not receiving regulated-material), the closure device shall be designed to operate such that when the closure device is secured in the closed position there are no visible cracks, holes, gaps, or other open spaces in the closure device or between the perimeter of the drain opening and the closure device.

(3) *Junction box control requirements.* Each junction box shall be equipped with controls as follows:

(i) The junction box shall be equipped with a closure device (e.g., manhole cover, access hatch) that is designed to operate such that when the closure device is secured in the closed position there are no visible cracks, holes, gaps, or other open spaces in the closure device or between the perimeter of the junction box opening and the closure device.

(ii) If the junction box is vented, the junction box shall be vented in accordance with the following requirements:

(A) The junction box shall be vented through a closed vent system to a control device except as provided for in paragraph (b)(3)(ii)(B) of this section. The closed vent system and control device shall be designed and operated in accordance in accordance with the standards specified in § 63.693 in subpart DD—National Emission Standards for Hazardous Air Pollutant Standards from Off-Site Waste and Recovery Operations.

(B) As an alternative to paragraph (b)(3)(ii)(A) of this section, the owner or operator may vent the junction box directly to the atmosphere when all of the following conditions are met:

(*1*) The junction box is filled and emptied by gravity flow (i.e., there is no pump) or is operated with no more than slight fluctuations in the liquid level. Large changes in the size of the junction box vapor headspace created by using a pump to repeatedly empty and then refill the junction box do not meet this condition.

(*2*) The vent pipe installed on the junction box shall be at least 90 centimeters in length and no greater than 10 centimeters in nominal inside diameter.

(*3*) Water seals are installed at the liquid entrance(s) to or exit from the junction box to restrict ventilation in the individual drain system and between components in the individual drain system. The owner or operator shall demonstrate (e.g., by visual inspection or smoke test) upon request by the Administrator that the junction box water seal is properly designed and restricts ventilation.

(4) *Sewer line control requirements.* Each sewer line shall not be open to the atmosphere and shall be covered or closed in a manner such that there are no visible cracks, holes, gaps, or other open spaces in the sewer line joints, seals, or other emission interfaces.

(5) *Operating requirements.* The owner or operator shall operate the air emission controls required by paragraphs (b)(2) through (b)(4) of this section in accordance with the following requirements:

(i) Each closure device shall be maintained in a closed position whenever regulated-material is in the individual drain system except when it is necessary to remove or open the closure device for sampling or removing material in the individual drain system, or for equipment inspection, maintenance, or repair.

(ii) Each drain equipped with a water seal and open to the atmosphere shall be operated to ensure that the liquid in the water seal is maintained at the appropriate level. Examples of acceptable means for complying with this provision include but are not limited to using a flow-monitoring device indicating positive flow from a main to a branch water line supplying a trap; continuously dripping water into the trap using a hose; or regular visual observations.

(iii) Each closed-vent system and the control device used to comply with paragraph (b)(3)(ii)(A) of this section shall be operated in accordance with the standards specified in 40 CFR 63.693.

31. Section 63.964 is amended by revising paragraph (b)(2) to read as follows:

§ 63.964 Inspection and monitoring requirements.

* * * * *

(b) * * *

(2) Repair of a defect may be delayed beyond 15 calendar days if the owner or operator determines that repair of the defect requires emptying or temporary removal from service of the individual drain system and no alternative capacity is available at the facility site to accept the regulated-material normally managed in the individual drain system. In this case, the owner or operator shall repair the defect the next time the process or unit that is generating the regulated-material managed in the individual drain system stops operation. Repair of the defect shall be completed

before the process or unit resumes operation.

* * * * *

32. Section 63.965 is amended by revising paragraph (b) to read as follows:

§ 63.965 Recordkeeping requirements.

* * * * *

(b) Owners and operators that use a closed-vent system and a control device in accordance with the provisions of § 63.962 of this subpart shall prepare and maintain the records required for the closed-vent system and control device in accordance with the requirements of § 63.693 in subpart DD—National Emission Standards for Hazardous Air Pollutant Standards from Off-Site Waste and Recovery Operations.

33. Section 63.966 is revised to read as follows:

§ 63.966 Reporting requirements.

Owners and operators that use a closed-vent system and a control device in accordance with the provisions of § 63.962 of this subpart shall prepare and submit to the Administrator the reports required for closed-vent systems and control devices in accordance with the requirements of § 63.693 in subpart DD—National Emission Standards for Hazardous Air Pollutant Standards from Off-Site Waste and Recovery Operations.

Subpart VV—National Emission Standards for Oil-Water Separators and Organic-Water Separators

34. Section 63.1041 is amended by revising the definition of "Safety device" to read as follows:

§ 63.1041 Definitions.

* * * * *

Safety device means a closure device such as a pressure relief valve, frangible disc, fusible plug, or any other type of device which functions to prevent physical damage or permanent deformation to equipment by venting gases or vapors during unsafe conditions resulting from an unplanned, accidental, or emergency event. For the purpose of this subpart, a safety device is not used for routine venting of gases or vapors from the vapor headspace underneath a cover such as during filling of the unit or to adjust the pressure in this vapor headspace in response to normal daily diurnal ambient temperature fluctuations. A safety device is designed to remain in a closed position during normal operations and open only when the internal pressure, or another relevant parameter, exceeds the device threshold setting applicable to the equipment as determined by the owner or operator based on manufacturer recommendations, applicable regulations, fire protection and prevention codes, standard engineering codes and practices, or other requirements for the safe handling of flammable, combustible, explosive, reactive, or hazardous materials.

* * * * *

35. Section 63.1045 is added to read as follows:

§ 63.1045 Standards—Pressurized separator.

(a) This section applies to owners and operators controlling air emissions from an oil-water or organic-water separator that is pressurized and is operated as a closed-system.

(b) The pressurized separator must meet the following requirements.

(1) The separator must be designed not to vent to the atmosphere as a result of compression of the vapor headspace in the separator during operation of the separator at its design capacity.

(2) All separator openings must be equipped with closure devices designed to operate with no detectable organic emissions as determined using the procedure specified in § 63.1046(a) of this subpart.

(3) Whenever a regulated-material is in the separator, the separator must be operated as a closed system that does not vent to the atmosphere except under either of the following conditions as specified in paragraph (b)(3)(i) or (b)(3)(ii) of this section.

(i) At those times when opening of a safety device, as defined in § 63.1041 of this subpart, is required to avoid an unsafe condition.

(ii) At those times when purging of inerts from the separator is required and the purge stream is routed to a closed-vent system and control device designed and operated in accordance with the applicable requirements of § 63.693 in subpart DD—National Emission Standards for Hazardous Air Pollutant Standards from Off-Site Waste and Recovery Operations.

36. Section 63.1046 is amended by revising paragraphs (a) and (b)(3) to read as follows:

§ 63.1046 Test methods and procedures.

(a) Procedure for determining no detectable organic emissions for the purpose of complying with this subpart.

(1) The test shall be conducted in accordance with the procedures specified in Method 21 of 40 CFR part 60, appendix A. Each potential leak interface (i.e., a location where organic vapor leakage could occur) on the cover and associated closure devices shall be checked. Potential leak interfaces that are associated with covers and closure devices include, but are not limited to: the interface of the cover and its foundation mounting; the periphery of any opening on the cover and its associated closure device; and the sealing seat interface on a spring-loaded pressure-relief valve.

(2) The test shall be performed when the unit contains a material having a total organic concentration representative of the range of concentrations for the materials expected to be managed in the unit. During the test, the cover and closure devices shall be secured in the closed position.

(3) The detection instrument shall meet the performance criteria of Method 21 of 40 CFR part 60, appendix A, except the instrument response factor criteria in section 3.1.2(a) of Method 21 shall be for the average composition of the organic constituents in the material placed in the unit, not for each individual organic constituent.

(4) The detection instrument shall be calibrated before use on each day of its use by the procedures specified in Method 21 of 40 CFR part 60, appendix A.

(5) Calibration gases shall be as follows:

(i) Zero air (less than 10 ppmv hydrocarbon in air); and

(ii) A mixture of methane or n-hexane in air at a concentration of approximately, but less than 10,000 ppmv.

(6) An owner or operator may choose to adjust or not adjust the detection instrument readings to account for the background organic concentration level. If an owner or operator chooses to adjust the instrument readings for the background level, the background level value must be determined according to the procedures in Method 21 of 40 CFR part 60, appendix A.

(7) Each potential leak interface shall be checked by traversing the instrument probe around the potential leak interface as close to the interface as possible, as described in Method 21. In the case when the configuration of the cover or closure device prevents a complete traverse of the interface, all accessible portions of the interface shall be sampled. In the case when the configuration of the closure device prevents any sampling at the interface and the device is equipped with an enclosed extension or horn (e.g., some pressure relief devices), the instrument probe inlet shall be placed at approximately the center of the exhaust area to the atmosphere.

(8) An owner or operator must determine if a potential leak interface operates with no detectable emissions using the applicable procedure specified in paragraph (a)(8)(i) or (a)(8)(ii) of this section.

(i) If an owner or operator chooses not to adjust the detection instrument readings for the background organic concentration level, then the maximum organic concentration value measured by the detection instrument is compared directly to the applicable value for the potential leak interface as specified in paragraph (a)(9) of this section.

(ii) If an owner or operator chooses to adjust the detection instrument readings for the background organic concentration level, the value of the arithmetic difference between the maximum organic concentration value measured by the instrument and the background organic concentration value as determined in paragraph (a)(6) of this section is compared with the applicable value for the potential leak interface as specified in paragraph (a)(9) of this section.

(9) A potential leak interface is determined to operate with no detectable emissions using the applicable criteria specified in paragraphs (a)(9)(i) and (a)(9)(ii) of this section.

(i) For a potential leak interface other than a seal around a shaft that passes through a cover opening, the potential leak interface is determined to operate with no detectable organic emissions if the organic concentration value determined in paragraph (a)(8) is less than 500 ppmv.

(ii) For a seal around a shaft that passes through a cover opening, the potential leak interface is determined to operate with no detectable organic emissions if the organic concentration value determined in paragraph (a)(8) is less than 10,000 ppmv.

(b) * * *

(3) Seal gaps, if any, shall be measured around the entire perimeter of the floating roof in each place where 0.32-centimeter (cm) (1/8 inch) diameter uniform probe passes freely (without forcing or binding against the seal) between the seal and the wall of the separator and measure the circumferential distance of each such location.

* * * * *

37. Section 63.1047 is amended by adding paragraph (e) and by revising paragraphs (a)(2) and (c)(1)(ii) to read as follows:

§ 63.1047 Inspection and monitoring requirements.

(a) * * *

(2) The owner or operator must perform an initial inspection following installation of the fixed roof. Thereafter, the owner or operator must perform the inspections at least once every calendar year except as provided for in paragraph (e) of this section.

* * * * *

(c) * * *

(1) * * *

(ii) The owner or operator must perform an initial inspection following installation of the fixed roof. Thereafter, the owner or operator must perform the inspections at least once every calendar year except as provided for in paragraph (e) of this section.

* * * * *

(e) *Alternative inspection interval.* Following the initial inspection of a fixed roof in accordance with the applicable provisions of this section, subsequent inspection of the fixed roof may be performed at intervals longer than 1 year when an owner or operator determines that performing the required inspection would expose a worker to dangerous, hazardous, or otherwise unsafe conditions and the owner or operator complies with the requirements specified in paragraphs (e)(1) and (e)(2) of this section.

(1) The owner or operator must prepare and maintain at the plant site written documentation identifying the specific fixed roof designated as "unsafe to inspect." The documentation must include for each fixed roof designated as such a written explanation of the reasons why the fixed roof is unsafe to inspect using the applicable procedures under this section.

(2) The owner or operator must develop and implement a written plan and schedule to inspect and monitor the fixed roof using the applicable procedures specified in this section during times when a worker can safely access the fixed roof. The required inspections and monitoring must be performed as frequently as practicable but do not need to be performed more frequently than the periodic schedule that would be otherwise applicable to the fixed roof under the provisions of this section. A copy of the written plan and schedule must be maintained at the plant site.

[FR Doc. 99-17943 Filed 7-19-99; 8:45 am]

BILLING CODE 6560-50-P

transmission as First-Class Mail are closed against inspection. Hard copy versions of electronic documents, while being prepared for entry as First-Class Mail, also are closed against postal inspection. The USPS may open mail other than First-Class Mail or Express Mail to determine whether the proper rate of postage is paid. Material wrapped or packaged so that it cannot be examined easily or cannot be examined without destruction or serious damage is closed against postal inspection and is charged the appropriate First-Class Mail or Express Mail rate.

* * * * *

4.0 FEES

4.1 Presort Mailing

[Revise 4.1 to remove references to Mailing Online mailers to read as follows:]

A First-Class Mail presort mailing fee must be paid once each 12-month period at each office of mailing by any person or organization entering mailings at automation or Presorted First-Class Mail rates. Payment of one fee allows a mailer to enter mail at all those rates. Persons or organizations paying this fee may enter clients' mail as well as their own mail. The fee may be paid in advance only for the next year and only during the last 30 days of the current service period. The fee charged is that which is in effect on the date of payment.

* * * * *

E140 Automation Rates

1.0 BASIC STANDARDS

[Revise 1.1b by removing reference to Mailing Online in G093 to read as follows:]

1.1 All Pieces

All pieces in a First-Class Mail automation rate mailing must:

* * * * *

b. Be part of a single mailing of at least 500 pieces of automation rate First-Class Mail, subject to 1.2.

* * * * *

E611 All Standard Mail

1.0 BASIC INFORMATION

* * * * *

1.2 Postal Inspection

[Revise 1.2 by removing reference to documents created in electronic form by means of Mailing Online to read as follows:]

Standard Mail is not sealed against postal inspection except for electronic documents retained by the Postal Service, which are sealed against postal inspection. Regardless of physical closure, the mailing of articles at Standard Mail rates constitutes consent by the mailer to postal inspection of the contents.

* * * * *

E612 Additional Standards for Standard Mail (A)

* * * * *

4.0 BULK RATES

* * * * *

4.7 Annual Fees

[Revise 4.7 by removing reference to fees in G093 to read as follows:]

Standard Mail (A) is subject to an annual mailing fee once each 12-month period. The fee may be paid in advance only for the next year and only during the last 30 days of the current service period. The fee charged is that in effect on the date of payment. Each mailer who enters mail at Standard Mail (A) rates paid with a meter or precanceled stamps must pay an annual mailing fee at each post office of mailing; a mailer paying this fee may enter clients' mail as well as the mailer's own. The mailer whose permit imprint appears on pieces in a mailing paid with a permit imprint must show that permit number on the postage statement and must pay the annual mailing fee for that permit; this fee is in addition to the fee for an application to use permit imprints.

* * * * *

4.9 Preparation

[Revise 4.9b by removing reference to Mailing Online in G093 to read as follows:]

Each Standard Mail (A) mailing is subject to these general standards:

* * * * *

b. Each mailing must contain at least 200 pieces or 50 pounds. See E620 for volume requirement eligibility unique to Presorted Standard rate mailings. Other volume standards can also apply, based on the rate claimed.

* * * * *

G General Information

* * * * *

[Remove G093, Mailing Online, and remove the preceding headings G000 and G090.]

* * * * *

P040 Permit Imprints

5.0 MAILINGS

5.1 Minimum Quantity

[Remove 5.1d, which provided for Mailing Online permit imprint mailings.]

* * * * *

These revisions will be incorporated into the pages of the Domestic Mail Manual. An appropriate amendment to 39 CFR 111.3 will be published in the **Federal Register** to reflect these changes.

Stanley F. Mires,

Chief Counsel, Legislative.

[FR Doc. 99–27906 Filed 10–25–99; 8:45 am]

BILLING CODE 7710–12–P

ENVIRONMENTAL PROTECTION AGENCY

40 CFR Part 63

[AD–FRL–6462–7]

RIN 2060–AF26

National Emission Standards for Hazardous Air Pollutants: Publicly Owned Treatment Works

AGENCY: Environmental Protection Agency (EPA).

ACTION: Final rule.

SUMMARY: This action promulgates national emission standards for hazardous air pollutants (NESHAP) for new and existing publicly owned treatment works (POTW). The primary hazardous air pollutants (HAP) emitted by these sources include xylenes, methylene chloride, toluene, ethyl benzene, chloroform, tetrachloroethylene, benzene, and naphthalene.

Each of these HAP can cause adverse health effects provided sufficient exposure. For example, exposure to methylene chloride can adversely affect the central nervous system and has been shown to cause liver and lung cancers in animals, while benzene is known to cause cancer in humans.

With this final rule, the EPA is requiring air pollution controls on a new or reconstructed treatment plant at a POTW that is a major source of HAP. The standards also require that new and existing POTW treating regulated waste streams from an industrial user, for the purpose of allowing that industrial user to comply with another NESHAP, meet the treatment and control requirements of the other relevant NESHAP.

EFFECTIVE DATE: October 26, 1999.

ADDRESSES: *Docket.* Docket No. A–96–46, containing information considered

by the EPA in development of the promulgated standards, is available for public inspection from 8 a.m. to 5:30 p.m., Monday through Friday, at the following address in room M-1500, Waterside Mall (ground floor): US Environmental Protection Agency, 401 M Street SW, Washington, DC 20460, telephone number (202) 260-7548. A reasonable fee may be charged for copying docket materials.

Responses to Comments Document. The responses to comments document for the promulgated standards may be obtained from the EPA Library (MD-35), Research Triangle Park, North Carolina 27711, telephone (919) 541-2777, or from the National Technical Information Services, 5285 Port Royal Road, Springfield, Virginia 22151, telephone (703) 605-6000 or (800) 553-6847 or via the Internet at www.fedworld.gov/ntis/ntishome/html. Please refer to "National Emission Standards for Hazardous Air Pollutants: Publicly Owned Treatment Works—Background Information for Final Standards: Summary of Public Comments and Responses" (EPA-453/R-99-008, October 1999).

The document contains the following: (1) a summary of all the public comments made on the proposed standards and the Administrator's responses to the comments, and (2) a summary of the changes made to the standards since proposal. This document is also available for downloading from the Technology Transfer Network (see **SUPPLEMENTARY INFORMATION**).

FOR FURTHER INFORMATION CONTACT: For information concerning this final rule or the analyses performed in developing this rule, contact Mr. Robert Lucas, Waste and Chemical Processes Group, Emission Standards Division (MD-13), Office of Air Quality Planning and Standards, U.S. EPA, Research Triangle Park, North Carolina 27711, telephone number (919) 541-0884, facsimile number (919) 541-0246, electronic mail address "lucas.bob@epa.gov". For information concerning applicability and rule determinations, contact your State or local representative or the appropriate EPA regional representatives. For a listing of EPA Regional contacts, see the following **SUPPLEMENTARY INFORMATION** section.

SUPPLEMENTARY INFORMATION:

Electronic Access. These final standards and all other information considered by the EPA in the development of the final standards are available in Docket Number A-96-46 or by request from the EPA's Air and Radiation Docket and Information Center (see **ADDRESSES**). Electronic versions of documents from the Office of Air and Radiation (OAR) are available through the EPA's OAR Technology Transfer Network Web site (TTNWeb). The TTNWeb is a collection of related Web sites containing information about many areas of air pollution science, technology, regulation, measurement, and prevention. The TTNWeb is directly accessible from the Internet via the World Wide Web location at the following address: "http://www.epa.gov/ttn". Electronic versions of this preamble and rule are located under the OAR Policy and Guidance Information Web site, at "http://www.epa.gov/ttn/oarpg/", under the **Federal Register** notices section. If more information on the TTNWeb is needed, contact the Systems Operator at (919) 541-5384.

EPA Regional Offices

Director, Office of Environmental Stewardship, Attn: Air Compliance Clerk
U.S. EPA Region I, 1 Congress Street, Suite 1100 (SEA), Boston, MA 02114-2023, (617) 918-1740

Umesh Dholakia
U.S. EPA Region II, 290 Broadway Street, New York, NY 10007-1866, (212) 637-4023

Dianne Walker
U.S. EPA Region III, 1650 Arch Street, Philadelphia, PA 19103, (215) 814-3297

Lee Page
U.S. EPA Region IV, Atlanta Federal Center, 61 Forsyth Street, SW, Atlanta, GA 30303-3104, (404) 562-9131

Bruce Varner
U.S. EPA Region V, 77 West Jackson Boulevard, Chicago, IL 60604-3507, (312) 886-6793

Jim Yang (6EN-AT)
U.S. EPA Region VI, First Interstate Bank Tower, 1445 Ross Avenue, Suite 1200, Dallas, TX 75202, (214) 665-7578

Gary Schlicht
U.S. EPA Region VII, 726 Minnesota Avenue, Kansas City, KS 66101, (913) 551-7097

Tami Thomas-Burton
U.S. EPA Region VIII, 999 18th Street, Suite 500, Denver, CO 80202, (303) 312-6581

Ken Bigos
U.S. EPA Region IX, 75 Hawthorne Street, San Francisco, CA 94105, (415) 744-1200

Dan Meyer
U.S. EPA Region X, 1200 Sixth Street, Seattle, WA 98101, (206) 553-4150

Regulated Entities. Entities potentially regulated by this action are publicly owned treatment works. Regulated categories and entities include:

Category	Standard Industrial Classification (SIC) codes	North American Industrial Classification System (NAICS) codes	Examples of potentially regulated entities
Industry (3) Not affected			
Federal Government	4952	22132	Sewage treatment facilities, and federally owned treatment works.
State/local/tribal governments	4952	22132	Sewage treatment facilities, municipal wastewater treatment facilities, and publicly owned treatment works.

This table is not intended to be exhaustive, but rather provides a guide for readers regarding entities likely to be regulated by this action. This table lists the types of entities that the EPA is now aware could potentially be regulated by this action. Other types of entities not listed in the table could also be regulated. To determine whether your facility is regulated by this promulgated action, you should carefully examine the applicability criteria in section III. A of this document and in 40 CFR 63.1580. If you have questions regarding the applicability of this action to a particular entity, consult the person listed in the preceding **FOR FURTHER INFORMATION CONTACT** section.

Judicial Review. National emission standards for hazardous air pollutants from POTW were proposed in the **Federal Register** on December 1, 1998 (63 FR 66084). Today's **Federal Register** action announces the EPA's final decision on the rule. Under section 307(b)(1) of the Clean Air Act (Act), judicial review of the final rule is available by filing a petition for review in the U.S. Court of Appeals for the District of Columbia Circuit within 60 days of today's publication of this final rule. Only an objection to this action which was raised with reasonable

specificity during the period for public comment may be raised during judicial review. Under section 307(b)(2) of the Act, the requirements that are the subject of today's notice may not be challenged later in civil or criminal proceedings brought by the EPA to enforce these requirements.

The following outline is provided to aid in reading the preamble to the final rule.

I. Background
A. Source Category Description
B. Overview of HAP Emissions from POTW
II. Summary of Considerations Made in Developing This Standard
A. Source of Authority
B. Stakeholder and Public Participation
III. Summary of Promulgated Standards
A. Affected Sources and Applicability
B. Requirements
IV. Summary of Impacts
V. Significant Comments and Changes to the Proposed Standards
A. Major Source Determination
B. Co-location With Other Sources of HAP Emissions
C. Control Requirements
D. Federally Owned Treatment Works
VI. Administrative Requirements
A. Executive Order 12866
B. Executive Order 13045
C. Paperwork Reduction Act
D. Regulatory Flexibility Act
E. Unfunded Mandates
F. Executive Order 12875
G. Executive Order 13084
H. National Technology Transfer and Advancement Act
I. Congressional Review Act
J. Executive Order 12612

I. Background

A. Source Category Description

The EPA's initial list of categories of major sources of HAP emissions, established under section 112(c)(1) of the Act, included POTW. This list was published on July 16, 1992 (57 FR 31576). The POTW source category is defined in the supporting documentation for the initial source category list. The POTW source category "includes emissions from wastewaters which are treated at a POTW."

> These wastewaters are produced by industrial, commercial, and domestic sources. Emissions from these wastewaters can occur within the collection system (sewers) as well as during treatment at the POTW. Control options include, but are not limited to, reduction of HAP's at the source before they enter the collection system, add-on emission controls on the collection system and at the POTW, and/or treatment process modifications/substitutions. (Documentation for Developing the Initial Source Category List, EPA-450/3-91-030, July 1992)

Section 112(e)(5) of the Act defines POTW by referring to the definition of treatment works in title II of the Federal Water Pollution Control Act, commonly referred to as the Clean Water Act. As set forth in section 212(2), 33 U.S.C. 1292(2), treatment works include the wastewater treatment units themselves, as well as intercepting sewers, outfall sewers, sewage collection systems, pumping, power, and other equipment. Any of these devices which are publicly owned may be a POTW. The wastewater collected, transmitted, and treated by such POTW may be generated by industrial, commercial, and/or domestic sources.

B. Overview of HAP Emissions From POTW

The HAP emitted by POTW originate in wastewater streams discharged by industrial, commercial, and other facilities. Since POTW can receive any HAP constituent, potentially, POTW can have emissions of any HAP. Currently, the primary HAP constituents associated with POTW sources include xylenes, methylene chloride, toluene, ethyl benzene, chloroform, tetrachloroethylene, benzene, and naphthalene.

Each of these HAP can cause adverse health effects provided sufficient exposure. For example, exposure to methylene chloride can adversely affect the central nervous system and has been shown to cause liver and lung cancers in animals, while benzene is known to cause cancer in humans.

Hazardous air pollutants present in wastewater entering POTW treatment plants can biodegrade, adhere to sewage sludge, volatilize to the air, or pass through (remain in the discharge) to receiving waters. Within the POTW source category, wastewater treatment units are the most likely source for HAP emissions, but wastewater collection systems (including transport systems) and other devices may also have emissions.

II. Summary of Considerations Made in Developing This Standard

A. Source of Authority

Section 112 of the Act addresses stationary sources of HAP. Section 112(b) of the Act, as amended, lists 188 chemicals, compounds, or groups of chemicals as HAP. The EPA is directed by section 112 to regulate the emissions of HAP from stationary sources by establishing national emission standards.

The statute requires the EPA to establish standards to reflect the maximum degree of reduction in HAP emissions through application of maximum achievable control technology (MACT) to major sources. Section 112(a)(1) of the Act defines a major source as:

> * * * any stationary source or group of stationary sources located within a contiguous area and under common control that emits or has the potential-to-emit considering controls, in the aggregate 10 tons per year (tpy) or more of any HAP or 25 tpy or more of any combination of HAP.

Section 112(d)(3) prescribes a minimum level of control for major sources of HAP, referred to as the MACT floor.

Section 112(e)(5) of the Act required the EPA to promulgate a MACT standard for publicly owned treatment works by November 15, 1995. Under section 112(j)(2) (the "MACT hammer"), if the EPA failed to promulgate a POTW MACT standard by November 15, 1997, major sources in the POTW category would be required to submit, within 18 months (by May 15, 1999), an application for a permit which would impose MACT requirements on a case-by-case basis. Although the EPA was unable to meet this deadline, on May 14, 1999, the EPA promulgated a rule (64 FR 26311) which extended the section 112(j) permit application deadline for this source category until December 15, 1999. The obligation for facilities to file a permit application under section 112(j)(2) is eliminated by the promulgation of these final standards.

B. Stakeholder and Public Participation

As prescribed in section 112(n)(3) of the Act:

> The Administrator may conduct, in cooperation with the owners and operators of publicly owned treatment works, studies to characterize emissions of hazardous air pollutants emitted by such facilities, to identify industrial, commercial and residential discharges that contribute to such emissions and to demonstrate control measures for such emissions. When promulgating any standard under this section applicable to publicly owned treatment works, the Administrator may provide for control measures that include pretreatment of discharges causing emissions of hazardous air pollutants and process or product substitutions or limitations that may be effective in reducing such emissions.

During the development of these final standards, representatives of POTW and sanitation districts were extensively consulted. The EPA worked closely with a trade association known as the Association of Metropolitan Sewerage Agencies (AMSA) for approximately 7 years.

A database comprising information supplied by the AMSA was used in the evaluation of HAP emissions and emissions control for POTW. Estimates of organic HAP emissions from model

sources were developed by the EPA based on information supplied by the AMSA, including most of the modeling inputs used for the EPA WATER8 emissions estimation model.

III. Summary of Promulgated Standards

This section provides a summary of the final standards contained in 40 CFR part 63, subpart VVV. The full regulatory text is printed in today's document and is also available in Docket No. A-96-46, directly from the EPA, or from the Technology Transfer Network (TTN) on the EPA's electronic bulletin board. More information on how to obtain a copy of the final regulation is provided in the **SUPPLEMENTARY INFORMATION** section of this document.

A. Affected Sources and Applicability

The wastewater treatment plant at a POTW is the affected source for this subpart. The subpart is applicable only to POTW that are located at facilities which are major sources of HAP emissions. In addition, the final rule exempts facilities which are not required to develop a pretreatment program under 40 CFR part 403.

B. Requirements

The final standards for POTW do not require any additional controls for existing non-industrial POTW treatment plants. New or reconstructed non-industrial POTW treatment plants must reduce their HAP emissions. This is accomplished by using covers and control devices on the POTW treatment units up to, but not including, the secondary treatment units.

In response to comments that the control requirements for new or reconstructed non-industrial POTW were too prescriptive and did not account for the differences between POTW treatment plants, the final standards include an alternative compliance option. Using the available HAP data provided by the trade association, the EPA calculated a fraction emitted value equivalent to applying covers and control devices on treatment units up to, but not including, the secondary treatment units. Under this option, each month, facilities calculate the fraction emitted by dividing the sum total of HAP emissions by the sum total of HAP loading to the wastewater treatment plant. Facilities must demonstrate that the annual rolling average of the fraction emitted does not exceed 0.014. Facilities can use any combination of pretreatment, wastewater treatment plant modifications, and control devices to meet the fraction emitted limit.

The POTW which provide treatment and control for a waste stream regulated by an industrial MACT are defined as industrial POTW treatment plants. Under the industrial discharger's MACT, the POTW provides air pollution control, generally under a contractual agreement. Today's POTW standard makes these controls directly enforceable on the POTW. An owner or operator of a new or reconstructed industrial POTW treatment plant must comply with the existing source MACT or the new or reconstructed MACT for non-industrial POTW, whichever is more stringent.

IV. Summary of Impacts

There are approximately 16,000 POTW nationwide that receive and treat approximately 113.6 million cubic meters per day (30 billion gallons per day) of domestic, commercial, and industrial wastewater. It was not possible to survey each facility and make a major source determination. Although only six major sources have been identified, the EPA knows that additional major sources will be subject to these standards. Based on discussions with POTW representatives, the EPA believes that these additional major sources do not have different emission sources or controls than the six identified facilities. Today's final rule does not add new requirements for these existing facilities.

Several POTW have been identified as possible industrial POTW. In addition, as more industrial NESHAP are promulgated, the EPA believes that more POTW could be used by industries to comply with the requirements of their industrial NESHAP. Today's final rule does not require any additional control, but it does make the industrial NESHAP control requirements directly enforceable on the POTW.

Current information from POTW representatives projects no new or reconstructed major POTW for the next 5 years. Thus, the EPA does not expect that any facilities will be required to apply the emission controls included in today's final rule, and the EPA projects minimal impacts from today's action.

V. Significant Comments and Changes to the Proposed Standards

Nineteen comment letters were received on the proposed rule. The commenters included State and local air pollution agencies, owners and operators of POTW, trade organizations, representatives of academia, and private citizens. A detailed discussion of these comments and responses can be found in the Background Information Document for the Final Standards (EPA-453/R-99-008).

The EPA's review of the significant issues raised by the commenters resulted in several changes to the proposed rule. This section summarizes the significant comments and provides the EPA's response to those comments.

A. Major Source Determination

The EPA developed a methodology which included a number of ways by which a POTW could determine if their treatment plant was a major source of HAP emissions. The methods developed were presented in a tiered approach to provide maximum flexibility and were primarily intended to assist the thousands of POTW treatment plants that are not major sources. Several comments were received that opposed including any methodology for major source determination.

Due to title V, part 70 determinations, a POTW and its local air pollution regulatory authorities should have agreement on the methods by which the POTW estimates emissions from wastewater treatment operations. Therefore, the EPA has removed procedures for major source determination, and has referred to 40 CFR part 63, Subpart A—General Provisions, for the definition of a major source.

The procedures that were removed from the standards, along with additional guidance, will be included in a future document on estimating emissions from POTW. The EPA will continue to provide assistance on the use of the WATER8 model. Requests for guidance on emissions estimation for the purpose of major source determination will be addressed on an "as-needed" basis, and may be obtained by consulting the person listed in the **FOR FURTHER INFORMATION CONTACT** section of today's final rule.

B. Co-Location With Other Sources of HAP Emissions

Several commenters believed that if a POTW treatment plant is not a major source, then it should not be considered a major source if it is co-located with another major source. These commenters recommended that the emissions should be based on actual emissions from the wastewater treatment portion of the POTW and should not include emissions from co-located sources (*e.g.*, portable internal combustion engines).

The term "major source" is defined in 40 CFR part 63, Subpart A—General Provisions, and includes the requirement for considering emissions

and the potential for emissions from co-located sources when determining major source status. Therefore, the major source determination must be based on facility-wide emissions.

C. Control Requirements

Several commenters believed that it was inappropriate to require POTW to be subject to §§ 63.693 through 63.697 of 40 CFR part 63, Subpart DD—National Emission Standards for Hazardous Air Pollutants: Off-Site Waste and Recovery Operations. The commenters stated that the best-controlled facility, on which the EPA based its MACT floor for new and reconstructed facilities, does not comply with these standards.

In response to the comments, the EPA has removed requirements from §§ 63.693 through 63.697 of 40 CFR part 63 which are not appropriate for POTW. In particular, the final rule does not require the use of an organic vapor analyzer to check for leaks in either the closed-vent system or the covers on tanks.

In addition, the EPA has added an alternative compliance option based on a modeling study of the control requirements. This alternative compliance option allows a new or reconstructed source to comply by demonstrating, for units up to, but not including the secondary treatment, that the weighted fraction emitted does not exceed 0.014 based on an annual average. Facilities calculate the weighted fraction emitted by dividing the sum total of HAP emissions by the sum total of HAP loading to the wastewater treatment plant.

A POTW may use any combination of pretreatment, wastewater treatment plant modifications, and control devices to achieve this performance standard. Facilities can determine the appropriate control efficiency for a particular control device. However, the POTW must document these calculations and demonstrate continuous compliance to the Administrator's satisfaction. In this context, continuous compliance refers to an annual rolling average of the fraction of the HAPs in the wastewater treated by the POTW which are emitted to the air.

D. Federally Owned Treatment Works

One commenter questioned whether Federally Owned Treatment Works (FOTW) should be subject to this rulemaking. The commenter suggested that FOTW should be excluded from the POTW source category because the term "publicly owned treated works" has been used more narrowly in other statutory contexts.

The EPA notes that many treatment works owned and operated by municipalities, States, and intermunicipal or interstate agencies are essentially the same in design, in operation, and in the types of wastewater that are treated as treatment works operated by the Federal government. Regulations developed under the Clean Water Act generally require that both types of facilities meet the same control requirements. EPA does not believe that it would be a constructive use of governmental resources to promulgate a separate MACT standard for FOTW. In addition, EPA believes that the inclusion of FOTW within the POTW source category is consistent with the intent of the Federal Facility Compliance Act of 1992.

EPA understands the confusion which could be caused by differences in the meaning of the term "publicly owned treatment works" in differing regulatory contexts. By including treatment works owned by the Federal government in the POTW source category, EPA does not intend to alter in any way the manner in which the term "publicly owned treatment works" has been interpreted or applied under any other statute or in any other regulation. Accordingly, EPA has revised the definition of POTW in this rule both to recognize this distinction and to confirm the intent of EPA to include FOTW in this source category.

VI. Administrative Requirements

A. Executive Order 12866

Under Executive Order 12866 (58 FR 51735, October 4, 1993), the Agency must determine whether the regulatory action is "significant" and therefore subject to Office of Management and Budget (OMB) review and to the requirements of the Executive Order. The Order defines "significant regulatory action" as one that is likely to result in a rule that may:

(1) Have an annual effect on the economy of $100 million or more or adversely affect in a material way the economy, a sector of the economy, productivity, competition, jobs, the environment, public health or safety, or State, local, or governments or communities;

(2) Create a serious inconsistency or otherwise interfere with an action taken or planned by another Agency;

(3) Materially alter the budgetary impact of entitlements, grants, user fees, or loan programs or the rights and obligations or recipients thereof; or

(4) Raise novel legal or policy issues arising out of legal mandates, the President's priorities, or the principles set forth in the Executive Order.

The OMB has deemed this regulatory action significant and requested review of this final rulemaking package. Therefore, the EPA submitted this action to OMB for review. Changes made in response to OMB suggestions or recommendations are documented in the public record.

B. Executive Order 13045

Executive Order 13045, "Protection of Children from Environmental Health Risks and Safety Risks" (62 FR 19885, April 23, 1997), applies to any rule that: (1) Is determined to be "economically significant" as defined under Executive Order 12866, and (2) concerns an environmental health or safety risk that the EPA has reason to believe may have a disproportionate effect on children. If the regulatory action meets both criteria, the EPA must evaluate the environmental health or safety effects of the planned rule on children, and explain why the planned regulation is preferable to other potentially effective and reasonably feasible alternatives considered by the EPA.

This final rule is not subject to Executive Order 13045 because it does not involve decisions on environmental health risks or safety risks that may disproportionately affect children.

C. Paperwork Reduction Act

The information collection requirements in this final rule have been submitted for approval to OMB under the Paperwork Reduction Act, 44 U.S.C. 3501 *et seq.* An Information Collection Request (ICR) document has been prepared by EPA (ICR No. 1891.02), and a copy may be obtained from Sandy Farmer by mail at the OP Regulatory Information Division, U.S. Environmental Protection Agency (2137), 401 M Street SW, Washington, DC 20460, by e-mail at farmer.sandy@epa.gov, or by calling (202) 260–2740. A copy may also be downloaded off the Internet at http://www.epa.gov/icr.

Generally, respondents are required to submit one-time reports of (1) start of construction for new facilities, and (2) anticipated and actual start-up dates for new facilities. For sources constructed or reconstructed after the effective date of the relevant standard, the regulation requires that the source submit an application for approval of construction or reconstruction. The application is required to contain information on the air pollution control that will be used for each potential HAP emission point.

For POTW facilities, the public reporting and recordkeeping burden is

estimated to average 41 hours per respondent per year. This estimate includes time for preparing and submitting notices, preparing and submitting demonstrations and applications, reporting releases, gathering information, and preparing and submitting reports. No capital costs are anticipated.

Burden means the total time, effort, or financial resources expended by persons to generate, maintain, retain, or disclose or provide information to or for a Federal agency. This includes the time needed to review instructions; develop, acquire, install, and utilize technology and systems for the purposes of collecting, validating, and verifying information, processing and maintaining information, and disclosing and providing information; adjust the existing ways to comply with any previously applicable instructions and requirements; train personnel to be able to respond to a collection of information; search data sources; complete and review the collection of information; and transmit or otherwise disclose the information.

An agency may not conduct or sponsor, and a person is not required to respond to a collection of information unless it displays a currently valid OMB control number. The OMB control numbers for EPA's regulations are listed in 40 CFR part 9 and 48 CFR chapter 15.

Comments are requested on the Agency's need for this information, the accuracy of the provided burden estimates, and any suggested methods for minimizing respondent burden, including through the use of automated collection techniques. Send comments on the ICR to the Director, OP Regulatory Information Division, U.S. Environmental Protection Agency (2137), 401 M Street SW, Washington, DC 20460; and to the Office of Information and Regulatory Affairs, Office of Management and Budget, 725 17th Street NW, Washington, DC 20503, marked "Attention: Desk Officer for EPA."

D. Regulatory Flexibility Act

The Regulatory Flexibility Act (RFA) generally requires an agency to conduct a regulatory flexibility analysis of certain proposed and final rules unless the agency certifies that the rule in question will not have a significant economic impact on a substantial number of small entities. The EPA's findings in this section are the result of the statutory requirements of the RFA as amended by the Small Business Regulatory Enforcement Fairness Act.

The EPA has determined that it is not necessary to prepare a regulatory flexibility analysis in connection with this final rule. The EPA has also determined that this rule will not have a significant economic impact on a substantial number of small entities. This final rule will impose no new requirements on existing industrial or non-industrial POTW treatment plants or new industrial POTW treatment plants. The EPA is uncertain whether any new non-industrial POTW treatment plants would be of sufficient size to be subject to this rule, but the number of affected sources would be very small in any case.

E. Unfunded Mandates

Title II of the Unfunded Mandates Reform Act of 1995 (UMRA), Public Law 104–4, establishes requirements for Federal agencies to assess the effects of their regulatory actions on State, local, and tribal governments and the private sector. Under section 202 of the UMRA, the EPA generally must prepare a written statement, including a cost-benefit analysis, for proposed and final rules with "Federal mandates" that may result in expenditures to State, local, and tribal governments, in the aggregate, or to the private sector, of $100 million or more in any 1 year. Before promulgating an EPA rule for which a written statement is needed, section 205 of the UMRA generally requires the EPA to identify and consider a reasonable number of regulatory alternatives and adopt the least costly, most cost-effective or least burdensome alternative that achieves the objectives of the rule. The provisions of section 205 do not apply when they are inconsistent with applicable law. Moreover, section 205 allows the EPA to adopt an alternative other than the least costly, most cost-effective, or least burdensome alternative if the Administrator publishes with the final rule an explanation why that alternative was not adopted. Before the EPA establishes any regulatory requirements that may significantly or uniquely affect small governments, including tribal governments, it must have developed under section 203 of the UMRA a small government agency plan. The plan must provide for notifying potentially affected small governments, enabling officials of affected small governments to have meaningful and timely input in the development of EPA regulatory proposals with significant Federal intergovernmental mandates, and informing, educating, and advising small governments on compliance with the regulatory requirements.

The EPA has determined that this rule does not contain a Federal mandate that may result in expenditures of $100 million or more for State, local, and tribal governments, in aggregate, or the private sector in any 1 year, nor does the rule significantly or uniquely impact small governments, because it contains no requirements that apply to such governments or impose obligations upon them. Thus, the requirements of the UMRA do not apply to this rule.

F. Executive Order 12875

Under Executive Order 12875, EPA may not issue a regulation that is not required by statute and that creates a mandate upon a State, local or tribal government, unless the Federal government provides the funds necessary to pay the direct compliance costs incurred by those governments, or EPA consults with those governments. If EPA complies by consulting, Executive Order 12875 requires EPA to provide to OMB a description of the extent of EPA's prior consultation with representatives of affected State, local and tribal governments, the nature of their concerns, copies of any written communications from the governments, and a statement supporting the need to issue the regulation. In addition, Executive Order 12875 requires EPA to develop an effective process permitting elected officials and other representatives of State, local and tribal governments "to provide meaningful and timely input in the development of regulatory proposals containing significant unfunded mandates."

Today's rule is required under section 112 (e)(5) of the Clean Air Act. Accordingly, the requirements of section 1(a) of Executive Order 12875 do not apply to this rule.

In developing this rule, the EPA consulted with these governments to enable them to provide meaningful and timely input in the development of this rule. As discussed in section II.B of this document, consultation opportunities included presumptive MACT partnerships, stakeholder meetings, and participation on the internal working group that prepared these final standards. State and local regulatory agencies are expected to be in favor of this final rule. Prior to publication of the proposed rule, some representatives of local governments had expressed concerns about the emission models and testing used to determine area source status. The EPA worked with these representatives in developing this final rule, and their concerns should be resolved with the publication of this final rule.

G. Executive Order 13084

Under Executive Order 13084, the EPA may not issue a regulation that is

not required by statute, that significantly or uniquely affects the communities of Indian tribal governments, and that imposes substantial direct compliance costs on those communities, unless the Federal government provides the funds necessary to pay the direct compliance costs incurred by the tribal governments, or EPA consults with those governments. If EPA complies by consulting, Executive Order 13084 requires EPA to provide to OMB, in a separately identified section of the preamble to the rule, a description of the extent of the EPA's prior consultation with representatives of affected tribal governments, a summary of the nature of their concerns, and a statement supporting the need to issue the regulation. In addition, Executive Order 13084 requires the EPA to develop an effective process permitting elected officials and other representatives of Indian tribal governments "to provide meaningful and timely input in the development of regulatory policies on matters that significantly or uniquely affect their communities."

This final rule does not significantly or uniquely affect the communities of Indian tribal governments. This rule imposes no new requirements on existing industrial or non-industrial POTW treatment plants or new industrial POTW treatment plants. The EPA is uncertain whether any new non-industrial POTW treatment plants will be of sufficient size to be subject to this rule, but the number of affected sources would be very small in any case and would not be likely to be located in the communities of Indian tribal governments. Accordingly, the requirements of section 3(b) of Executive Order 13084 do not apply to this final rule.

H. National Technology Transfer and Advancement Act

Section 12(d) of the National Technology Transfer and Advancement Act of 1995 (NTTAA), Public Law No. 104–113, section 12(d) (15 U.S.C. 272 note), directs the EPA to use voluntary consensus standards in its regulatory activities unless to do so would be inconsistent with applicable law or otherwise impractical. Voluntary consensus standards are technical standards (*e.g.*, materials specifications, test methods, sampling procedures, business practices, etc.) that are developed or adopted by voluntary consensus standard bodies. The NTTAA requires the EPA to provide Congress, through OMB, explanations when the EPA decides not to use available and applicable voluntary consensus standards.

This final rulemaking includes technical standards and requirements for taking measurements. Consequently, the EPA searched for applicable voluntary consensus standards by searching the National Standards System Network (NSSN) database. The NSSN is an automated service provided by the American National Standards Institute for identifying available national and international standards.

The EPA searched for methods and tests required by this final rule, all of which are methods or tests previously promulgated. This final rule includes methods that measure: (1) Vapor leak detection (EPA Method 21); (2) volatile organic compound concentration in vented gas stream (EPA Method 18); (3) volumetric flow rate of the vented gas stream (EPA Methods 2, 2A, 2C, or 2D); and (4) sampling site location (Method 1 or 1A). These EPA methods are found in Appendix A to 40 CFR parts 60, 63, and 136.

Except for EPA Methods 2 and 2C (Appendix A to 40 CFR part 60), no other potentially equivalent methods for the methods and tests in the rule were found in the NSSN database search. The EPA identified one Chinese (Taiwanese) National Standard (CNS) which may potentially be an equivalent method to EPA Methods 2 and 2C. The CNS method is CNS K9019 for measuring velocity and flow rates in stack gases.

However, the EPA does not believe that CNS K9019 is a voluntary consensus method. It is unlikely that CNS K9019 was considered by industry groups or national standards setting organizations, because it was not developed in the U.S. and there is no available information about it in the U.S.

To confirm this, the EPA requested comments at proposal on whether any U.S. industry has adopted CNS K9019 as a voluntary consensus method. The EPA also requested comments on whether any potential voluntary consensus methods existed that could be allowed in addition to the methods in the proposed rule. No potential voluntary consensus methods were submitted with the public comments on the proposed version of this final rule. The EPA interprets this to mean that no applicable voluntary consensus standards are available for POTW.

I. Congressional Review Act

The Congressional Review Act, 5 U.S.C. 801 *et seq.*, as added by the Small Business Regulatory Enforcement Fairness Act of 1996, generally provides that before a rule may take effect, the agency promulgating the rule must submit a rule report, which includes a copy of the rule, to each House of the Congress and to the Comptroller General of the United States. The EPA will submit a report containing this rule and other required information to the U.S. Senate, the U.S. House of Representatives, and the Comptroller General of the United States prior to publication of the rule in the **Federal Register**. This rule is not a "major rule" as defined by 5 U.S.C. 804(2). This rule will be effective October 26, 1999.

J. Executive Order 12612

On August 4, 1999, President Clinton issued a new executive order on federalism, Executive Order 13132, (64 FR 43255, August 10, 1999) which will take effect on November 2, 1999. In the interim, the current Executive Order 12612 (52 FR 41685, October 30, 1987) on federalism still applies. This rule will not have a substantial direct effect on States, on the relationship between the national government and the States, or on the distribution of power and responsibilities among the various levels of government, as specified in Executive Order 12612. This rule is not likely to have a substantial direct effect on States because it imposes no new control requirements on existing treatment works, and because the incremental cost of any required controls for new sources would not be significant in the context of the construction of new facilities. Moreover, since the authority to regulate any affected sources will be routinely delegated to State permitting authorities, this rule should have no substantial effect on the relationship between the national government and the States or on the distribution of power and responsibilities among the various levels of government.

List of Subjects in 40 CFR Part 63

Environmental protection, Air pollution control, Hazardous substances, Pretreatment, Publicly owned treatment works, Reporting and recordkeeping requirements.

Dated: October 15, 1999.

Carol M. Browner,

Administrator.

For reasons set out in the preamble, part 63, title 40, chapter I of the Code of Federal Regulations is amended as follows:

PART 63—NATIONAL EMISSION STANDARDS FOR HAZARDOUS AIR POLLUTANTS FOR SOURCE CATEGORIES

1. The authority citation for part 63 continues to read as follows:

Authority: 42 U.S.C. 7401 *et seq.*

2. Part 63 is amended by adding subpart VVV to read as follows:

Subpart VVV—National Emission Standards for Hazardous Air Pollutants: Publicly Owned Treatment Works

Sec.

Applicability

63.1580 Am I subject to this subpart?
63.1581 Does the subpart distinguish between different types of POTW treatment plants?

Industrial POTW Treatment Plant Description and Requirements

63.1582 What are the characteristics of an industrial POTW treatment plant?
63.1583 What are the emission points and control requirements for an industrial POTW treatment plant?
63.1584 When do I have to comply?
63.1585 How does an industrial POTW treatment plant demonstrate compliance?

Non-industrial POTW Treatment Plant Requirements

63.1586 What are the emission points and control requirements for a non-industrial POTW treatment plant?
63.1587 When do I have to comply?
63.1588 What inspections must I conduct?
63.1589 What records must I keep?
63.1590 What reports must I submit?

General Requirements

63.1591 What are my notification requirements?
63.1592 Which General Provisions apply to my POTW treatment plant?
63.1593 How will the EPA determine if I am in compliance with this subpart?
63.1594 Who enforces this subpart?
63.1595 List of definitions.
Table 1 to Subpart VVV—Applicability of 40 CFR Part 63 General Provisions to Subpart VVV

Applicability

§ 63.1580 Am I subject to this subpart?

(a) You are subject to this subpart if the following are all true:

(1) You own or operate a publicly owned treatment works (POTW) that includes an affected source (§ 63.1595);

(2) The affected source is located at a major source of hazardous air pollutant (HAP) emissions; and

(3) Your POTW is required to develop and implement a pretreatment program as defined by 40 CFR 403.8 (for a POTW owned or operated by a municipality, state, or intermunicipal or interstate agency), or your POTW would meet the general criteria for development and implementation of a pretreatment program (for a POTW owned or operated by a department, agency, or instrumentality of the Federal government).

Note to paragraph (a)(2): See § 63.2 of the national emission standards for hazardous air pollutants (NESHAP) general provisions in subpart A of this part for a definition of major source.

(b) If your existing POTW treatment plant is not located at a major source as of October 26, 1999, but thereafter becomes a major source for any reason other than reconstruction, then, for the purpose of this subpart, your POTW treatment plant would be considered an existing source.

(c) If an industrial major source complies with applicable NESHAP requirements by using the treatment and controls located at your POTW, your POTW is considered to be a major source regardless of whether you otherwise meet the applicable criteria.

(d) If you reconstruct your POTW treatment plant, then the requirements for a new or reconstructed POTW treatment plant, as defined in § 63.1595, apply.

§ 63.1581 Does the subpart distinguish between different types of POTW treatment plants?

Yes, POTW treatment plants are divided into two subcategories. A POTW treatment plant which does not meet the characteristics of an industrial POTW treatment plant belongs in the non-industrial POTW treatment plant subcategory as defined in § 63.1595.

Industrial POTW Treatment Plant Description and Requirements

§ 63.1582 What are the characteristics of an industrial POTW treatment plant?

(a) Your POTW is an industrial POTW treatment plant if an industrial discharger complies with its NESHAP by using the treatment and controls located at your POTW. Your POTW accepts the regulated waste stream and provides treatment and controls as an agent for the industrial discharger. Industrial POTW treatment plant is defined in § 63.1595.

(b) If, in the future, an industrial discharger begins complying with its NESHAP by using the treatment and controls at your POTW, then on the date that the industrial discharger certifies compliance, your POTW treatment plant will be considered an industrial POTW treatment plant.

(c) If your POTW treatment plant accepts one or more specific regulated industrial waste streams as part of compliance with one or more other NESHAP, then you are subject to all the requirements of each appropriate NESHAP for each waste stream, as described in the following section. In the case of overlapping NESHAP requirements, the more stringent of the requirements will apply.

§ 63.1583 What are the emission points and control requirements for an industrial POTW treatment plant?

(a) The emission points and control requirements for an existing industrial POTW treatment plant are specified in the appropriate NESHAP(s) for the industrial user(s) (see § 63.1582). For example, an existing industrial POTW treatment plant that provides treatment for a facility subject to subpart FF of this part, the National Emission Standard for Benzene Waste Operations, must meet the treatment and control requirements specified in § 61.348(d)(4) of this chapter.

(b) The emission points and control requirements for a new or reconstructed industrial POTW treatment plant are either those specified by the particular NESHAP(s) which apply to the industrial user(s) who discharge their waste for treatment to the POTW, or those emission points and control requirements set forth in § 63.1586. The set of control requirements which applies to a particular new or reconstructed POTW is that set which requires the most stringent overall control of HAP emissions. If you are uncertain which set of requirements is more stringent, this determination should be made in consultation with the permitting authority. Reconstruction is defined in § 63.1595.

§ 63.1584 When do I have to comply?

(a) *Existing industrial POTW treatment plant.* If you have an existing industrial POTW treatment plant, the appropriate NESHAP(s) for the industrial user(s) sets the compliance date, or the compliance date is 60 days after October 26, 1999, whichever is later.

(b) *New industrial POTW treatment plant.* If you have a new industrial POTW treatment plant, you must be in compliance as soon as you begin accepting the waste stream(s) for treatment. If you begin accepting a specific regulated industrial waste stream(s) for treatment, you must be in compliance by the time specified in the appropriate NESHAP(s) for the industrial user(s).

§ 63.1585 How does an industrial POTW treatment plant demonstrate compliance?

(a) An existing industrial POTW treatment plant demonstrates compliance by operating treatment and control devices which meet all

requirements specified in the appropriate industrial NESHAP(s). Requirements may include performance tests, routine monitoring, recordkeeping, and reporting.

(b) If you have a new or reconstructed industrial POTW plant, you must first determine whether the control requirements set forth in the applicable industrial NESHAP(s) or the control requirements applicable to a new or reconstructed nonindustrial POTW under § 63.1586 would require more stringent overall control of HAP emissions. You must then meet whichever set of requirements is more stringent. If you determine that the controls required by the applicable industrial NESHAP(s) are more stringent, you demonstrate compliance by operating treatment and control devices which meet all requirements specified in those industrial NESHAP(s). If you determine that the controls required for a new or reconstructed nonindustrial POTW are more stringent, you demonstrate compliance by meeting all requirements in §§ 63.1586 through 63.1590.

Non-industrial POTW Treatment Plant Requirements

§ 63.1586 What are the emission points and control requirements for a non-industrial POTW treatment plant?

There are no control requirements for an existing non-industrial POTW treatment plant. The control requirements for a new or reconstructed non-industrial POTW treatment plant are as follows:

(a) Covers on the emission points up to, but not including, the secondary influent pumping station or the secondary treatment units. These emission points are treatment units that include, but are not limited to, influent waste stream conveyance channels, bar screens, grit chambers, grinders, pump stations, aerated feeder channels, primary clarifiers, primary effluent channels, and primary screening stations. In addition, all covered units, except primary clarifiers, must have the air in the headspace ducted to a control device in accordance with the standards for closed-vent systems and control devices in § 63.693 of subpart DD of this part, except you may substitute visual inspections for leak checks rather than Method 21 of Appendix A of part 60 of this chapter. Reconstructed is defined in § 63.1595.

(1) Covers must be tightly fitted and designed and operated to minimize exposure of the wastewater to the atmosphere. This includes, but is not limited to, the absence of visible cracks, holes, or gaps in the roof sections or between the roof and the supporting wall; broken, cracked, or otherwise damaged seals or gaskets on closure devices; and broken or missing hatches, access covers, caps, or other closure devices.

(2) If wastewater is in a treatment unit, each opening must be maintained in a closed, sealed position, unless plant personnel are present and conducting wastewater or sludge sampling, or equipment inspection, maintenance, or repair.

(b) As an alternative to the requirements in paragraph (a) of this section, you may comply by demonstrating, for all units up to the secondary influent pumping station or the secondary treatment units, that the fraction emitted does not exceed 0.014. You must demonstrate that for your POTW, the sum of all HAP emissions from those units divided by the sum of all HAP mass loadings results in a annual rolling average of the fraction emitted no greater than 0.014. You may use any combination of pretreatment, wastewater treatment plant modifications, and control devices to achieve this performance standard; however, you must demonstrate, to the Administrator's satisfaction that:

(1) You have accurately determined your POTW's annual HAP mass loadings and your POTW's annual HAP emissions as of the date of start-up;

(2) Your POTW meets the fraction emitted standard of 0.014 or less; and

(3) Your POTW has established procedures to demonstrate continuous compliance which are consistent with the criteria set forth in § 63.1588(c)(4).

§ 63.1587 When do I have to comply?

If your POTW treatment plant began construction on or after December 1, 1998, you must comply with all provisions of this subpart either immediately upon startup, or by six months after October 26, 1999, whichever date is later.

§ 63.1588 What inspections must I conduct?

(a) If your treatment units are required to have covers, you must conduct the following inspections:

(1) You must visually check the cover and its closure devices for defects that could result in air emissions. Defects include, but are not limited to, visible cracks, holes, or gaps in the roof sections or between the roof and the supporting wall; broken, cracked, or otherwise damaged seals or gaskets on closure devices; and broken or missing hatches, access covers, caps, or other closure devices.

(2) You must perform an initial visual inspection with follow-up inspections at least once per year.

(3) In the event that you find a defect on a treatment unit in use, you must repair the defect within 45 days. If you cannot repair within 45 days, you must notify the EPA or the designated State authority immediately and report the reason for the delay and the date you expect to complete the repair. If you find a defect on a treatment unit that is not in service, you must repair the defect prior to putting the treatment unit back in wastewater service.

(b) If you own or operate a control device used to meet the requirements for § 63.1586, you must comply with the inspection and monitoring requirements of § 63.695(c) of subpart DD of this part.

(c) To comply with the performance standard specified in § 63.1586(b), you must develop an inspection and monitoring plan. This inspection and monitoring plan must include, at a minimum, the following:

(1) A method to determine, to the satisfaction of the Administrator, the influent HAP mass loading, *i.e.*, the annual mass quantity for each HAP entering the wastewater treatment plant.

(2) A method to determine, to the satisfaction of the Administrator, your POTW's annual HAP emissions for all units up to and including the secondary influent pumping station or up to and not including the secondary treatment units as of October 26, 1999. The method you use to determine your HAP emissions, such as modeling or direct source measurement, must:

(i) Be approved by your EPA Regional Office, State, or local regulatory agency for use at your POTW;

(ii) Account for all factors affecting emissions from your plant including, but not limited to, emissions from wastewater treatment units; emissions resulting from inspection, maintenance, and repair activities; fluctuations (*e.g.*, daily, monthly, annual, seasonal) in your influent wastewater HAP concentrations; annual industrial loading; performance of control devices; or any other factors that could affect your annual HAP emissions; and

(iii) Include documentation that the values and sources of all data, operating conditions, assumptions, etc., used in your method result in an accurate estimation of annual emissions from your plant.

(3) Documentation, to the satisfaction of the Administrator, that your POTW meets the fraction emitted standard of 0.014 or less, *i.e.*, the sum of all HAP emissions from paragraph (c)(2) of this section divided by the sum of all HAP mass loadings from paragraph (c)(1) of

this section results in a fraction emitted of 0.014 or less as described in paragraph (c)(4) of this section.

(4) A method to demonstrate, to the satisfaction of the Administrator, that your POTW is in continuous compliance with the requirements of § 63.1586(b). Continuous compliance means that your emissions, when averaged over the course of a year, do not exceed the level of emissions that allows your POTW to comply with § 63.1586(b). For example, you may identify a parameter(s) that you can monitor that assures your emissions, when averaged over the entire year, will meet the requirements in § 63.1586(b). Some example parameters that may be considered for monitoring include your wastewater influent HAP concentration and flow, industrial loading from your permitted industrial dischargers, and your control device performance criteria. Where emission reductions are due to proper operation of equipment, work practices, or other operational procedures, your demonstration must specify the frequency of inspections and the number of days to completion of repairs. You must, at a minimum, perform the following each month to demonstrate that your annual rolling average of the fraction emitted is 0.014 or less:

(i) Determine the average daily flow of the wastewater entering your POTW treatment plant for the month;

(ii) Determine the flow-weighted monthly concentration of each HAP in your influent listed in Table 1 to subpart DD of this part;

(iii) Using the current month's information in paragraphs (c)(4)(i) and (ii) of this section, determine a total annual loading (Mg/year) of each HAP entering your POTW treatment plant;

(iv) Sum up the values in paragraph (c)(4)(iii) of this section and determine a total annual loading value (Mg/year) for all HAP entering your POTW treatment plant for the current month;

(v) Based on the current month's information in paragraph (c)(4)(iii) of this section along with source testing and emission modeling, for each HAP, determine annual emissions (Mg/year) from all wastewater units up to, but not including, secondary treatment units;

(vi) Sum up the values in paragraph (c)(4)(v) of this section and determine the total annual emissions value for the month for all HAP from all wastewater units up to, but not including, secondary treatment units;

(vii) Calculate the fraction emitted value for the month by dividing the total annual HAP emissions value from paragraph (c)(4)(vi) of this section by the total annual loading from paragraph (c)(4)(iv) of this section; and

(viii) Average the fraction emitted value for the month determined in paragraph (c)(4)(vii) of this section, with the values determined for the previous 11 months, to calculate an annual rolling average of the fraction HAP emitted.

§ 63.1589 What records must I keep?

(a) To comply with the equipment standard specified in § 63.1586(b), you must prepare and maintain the following records:

(1) A record for each treatment unit inspection required by § 63.1588(a). You must include a treatment unit identification number (or other unique identification description as selected by you) and the date of inspection.

(2) For each defect detected during inspections required by § 63.1588(a), you must record the location of the defect, a description of the defect, the date of detection, the corrective action taken to repair the defect, and the date the repair to correct the defect is completed.

(3) In the event that repair of the defect is delayed, in accordance with the provisions of § 63.1588(a), you must also record the reason for the delay and the date you expect to complete the repair.

(4) If you own or operate a control device used to meet the requirements for § 63.1586, you must comply with the recordkeeping requirements of § 63.696(a), (b), (g), and (h).

(b) To comply with the performance standard specified in § 63.1586(b), you must prepare and maintain the following records:

(1) A record of the methods and data used to determine your POTW's annual HAP emissions as determined in § 63.1588(c);

(2) A record of the methods and data used to determine that your POTW meets the fraction emitted standard of 0.014 or less, as determined in § 63.1588(c); and

(3) A record of the methods and data that demonstrates that your POTW is in continuous compliance with the requirements of § 63.1588(c).

§ 63.1590 What reports must I submit?

(a)(1) If you have an existing nonindustrial POTW treatment plant, you are not required to submit a notification of compliance status. If you have a new or reconstructed nonindustrial POTW treatment plant, you must submit to the Administrator a notification of compliance status, signed by the responsible official who must certify its accuracy, attesting to whether your POTW treatment plant has complied with this subpart. This notification must be submitted initially, and each time a notification of compliance status is required under this subpart. At a minimum, the notification must list—

(i) The methods that were used to determine compliance;

(ii) The results of any monitoring procedures or methods that were conducted;

(iii) The methods that will be used for determining continuing compliance;

(iv) The type and quantity of HAP emitted by your POTW treatment plant;

(v) A description of the air pollution control equipment (or method) for each emission point; and

(vi) Your statement that your POTW treatment plant has complied with this subpart.

(2) You must send this notification before the close of business on the 60th day following the completion of the relevant compliance demonstration activity specified in this subpart.

(b) After you have been issued a title V permit, you must comply with all requirements for compliance status reports contained in your title V permit, including reports required under this subpart. After you have been issued a title V permit, and each time a notification of compliance status is required under this subpart, you must submit the notification of compliance status to the appropriate permitting authority, as described in § 63.1580(d), following completion of the relevant compliance demonstration activity specified in this subpart.

(c) You must comply with the delay of repair reporting required in § 63.1588(a).

(d) If your State has not been delegated authority, you must submit reports to your EPA Regional Office. If your State has been delegated authority, you must submit reports to your delegated State authority, and you must send a copy of each report submitted to the State to your EPA Regional Office. Your EPA Regional Office, at its discretion, may waive this requirement for any reports.

(e) You may apply to the Administrator for a waiver of recordkeeping and reporting requirements by complying with the requirements of § 63.10(f) of subpart A of this part.

(f) If you own or operate a control device used to meet the requirements of § 63.1586(a), you must submit the reports required by § 63.697(b) of subpart DD of this part, including a notification of performance tests; a performance test report; a startup,

shutdown, and malfunction report; and a summary report.

(g) To comply with the performance standard specified in § 63.1586(b), you must submit, for approval by the Administrator, an initial report explaining your compliance approach 90 days prior to beginning operation of your new or reconstructed POTW. You must also submit a startup, shutdown, and malfunction report.

General Requirements

§ 63.1591 What are my notification requirements?

(a) If you are subject to this subpart, and your State has not been delegated authority, you must submit notifications to the appropriate EPA Regional Office. If your State has been delegated authority you must submit notifications to your State and a copy of each notification to the appropriate EPA Regional Office. The Regional Office may waive this requirement for any notifications at its discretion.

(b) You must notify the Administrator in writing no later than 120 calendar days after the effective date of this subpart (or within 120 calendar days after your POTW treatment plant becomes subject to the relevant standard), and you must provide the following information:

(1) Your name and address;

(2) The address (*i.e.*, physical location) of your POTW treatment plant;

(3) An identification of these standards as the basis of the notification and your POTW treatment plant's compliance date; and

(4) A brief description of the nature, size, design, and method of operation of your POTW treatment plant, including its operating design capacity and an identification of each point of emission for each HAP, or if a definitive identification is not yet possible, a preliminary identification of each point of emission for each HAP.

(c) You must notify the Administrator if your data show that you are no longer in continuous compliance.

§ 63.1592 Which General Provisions apply to my POTW treatment plant?

Table 1 to this subpart lists the General Provisions (40 CFR part 63, subpart A) which apply to POTW treatment plants.

§ 63.1593 How will the EPA determine if I am in compliance with this subpart?

(a) The Administrator will determine compliance with this subpart by reviewing your reports and records or by inspecting your POTW treatment plant.

(b) If you fail to comply with any or all of the provisions of this subpart, you will be considered in violation of this subpart. For example, failure to perform any or all of the following, specified in § 63.1588, would be a violation: failure to visually inspect the cover on your treatment unit, failure to repair a defect on a treatment unit in use within the specified time period, failure to report a delay in repair, failure to determine your POTW's annual HAP emissions when your new or reconstructed POTW becomes subject to this subpart, failure to demonstrate that your POTW achieves an HAP fraction emitted of 0.014, or failure to demonstrate that your POTW is in continuous compliance with the requirements of § 63.1586(b).

(c) Your POTW treatment plant may be exempted from compliance with this subpart if the President determines that the technology to implement these standards is not available, and that it is in the national security interests of the United States to do so. This exemption may last for up to 2 years at a time and may be extended for additional periods of up to 2 years each.

§ 63.1594 Who enforces this subpart?

If the Administrator has delegated authority to your State, then the State enforces this subpart. If the Administrator has not delegated authority to your State, then the EPA Regional Office enforces this subpart.

§ 63.1595 List of definitions.

Affected source means the group of all equipment that comprise the POTW treatment plant.

Area source means any stationary source of HAP that is not a major source.

Cover means a device that prevents or reduces air pollutant emissions to the atmosphere by forming a continuous barrier over the waste material managed in a treatment unit. A cover may have openings (such as access hatches, sampling ports, gauge wells) that are necessary for operation, inspection, maintenance, and repair of the treatment unit on which the cover is used. A cover may be a separate piece of equipment which can be detached and removed from the treatment unit, or a cover may be formed by structural features permanently integrated into the design of the treatment unit. The cover and its closure devices must be made of suitable materials that will minimize exposure of the waste material to the atmosphere, to the extent practical, and will maintain the integrity of the cover and its closure devices throughout its intended service life.

Fraction emitted means the fraction of the mass of HAP entering the POTW wastewater treatment plant which is emitted prior to secondary treatment. The value is calculated using the following steps:

(1) Determine mass emissions from all equipment up to but not including secondary treatment for each HAP listed in Table 1 to subpart DD of this part;

(2) Sum the HAP emissions (ΣE);

(3) sum the HAP mass loadings (ΣL) in the influent to the POTW wastewater treatment plant; and

(4) Calculate the fraction emitted ($f_e$monthly) using $f_e\text{monthly}=\Sigma E/\Sigma L$.

HAP means hazardous air pollutant(s).

Industrial POTW means a POTW that accepts a waste stream regulated by an industrial NESHAP and provides treatment and controls as an agent for the industrial discharger. The industrial discharger complies with its NESHAP by using the treatment and controls located at the POTW. For example, an industry discharges its benzene-containing waste stream to the POTW for treatment to comply with 40 CFR part 61, Subpart FF—National Emission Standard for Benzene Waste Operations. This definition does not include POTW treating waste streams not specifically regulated under another NESHAP.

Industrial user means a nondomestic source introducing any pollutant or combination of pollutants into a POTW. Industrial users can be commercial or industrial facilities whose wastes enter local sewers.

Non-industrial POTW means a POTW that does not meet the definition of an industrial POTW as defined above.

Publicly owned treatment works (POTW) means a treatment works, as that term is defined by section 112(e)(5) of the Clean Air Act, which is owned by a municipality (as defined by section 502(4) of the Clean Water Act), a State, an intermunicipal or interstate agency, or any department, agency, or instrumentality of the Federal Government. This definition includes any intercepting sewers, outfall sewers, sewage collection systems, pumping, power, and other equipment. The wastewater treated by these facilities is generated by industrial, commercial, and domestic sources. As used in this regulation, the term POTW refers to both any publicly owned treatment works which is owned by a State, municipality, or intermunicipal or interstate agency and therefore eligible to receive grant assistance under the Subchapter II of the Clean Water Act, and any federally owned treatment works as that term is described in section 3023 of the Solid Waste Disposal Act.

POTW treatment plant means that portion of the POTW which is designed to provide treatment (including recycling and reclamation) of municipal sewage and industrial waste.

Reconstruction means the replacement of components of an affected or a previously unaffected stationary source such that:

(1) The fixed capital cost of the new components exceeds 50 percent of the fixed capital cost that would be required to construct a comparable new source; and

(2) It is technologically and economically feasible for the reconstructed source to meet the relevant standard(s) established by the Administrator (or a State) pursuant to section 112 of the Act. Upon reconstruction, an affected source, or a stationary source that becomes an affected source, is subject to relevant standards for new sources, including compliance dates, irrespective of any change in emissions of HAP from that source.

Secondary treatment means treatment processes, typically biological, designed to reduce the concentrations of dissolved and colloidal organic matter in wastewater.

Waste and wastewater means a material, or spent or used water or waste, generated from residential, industrial, commercial, mining, or agricultural operations or from community activities that contain dissolved or suspended matter, and that is discarded, discharged, or is being accumulated, stored, or physically, chemically, thermally, or biologically treated in a publicly owned treatment works.

TABLE 1 TO SUBPART VVV—APPLICABILITY OF 40 CFR PART 63 GENERAL PROVISIONS TO SUBPART VVV

General provisions reference	Applicable to subpart VVV	Explanation
§ 63.1		APPLICABILITY.
§ 63.1(a)(1)	Yes	Terms defined in CAAA.
§ 63.1(a)(2)	Yes	General applicability explanation.
§ 63.1(a)(3)	Yes	Cannot diminish a stricter NESHAP.
§ 63.1(a)(4)	Yes	Not repetitive. Doesn't apply to section 112(r).
§ 63.1(a)(5)	Yes	Section reserved.
§ 63.1(a)(6)–(8)	Yes	Contacts and authorities.
§ 63.1(a)(9)	Yes	Section reserved.
§ 63.1(a)(10)	Yes	Time period definition.
§ 63.1(a)(11)	Yes	Postmark explanation.
§ 63.1(a)(12)–(14)	Yes	Time period changes. Regulation conflict. Force and effect of subpart A.
§ 63.1(b)(1)	Yes	Initial applicability determination of subpart A.
§ 63.1(b)(2)	Yes	Operating permits by States.
§ 63.1(b)(3)	No	Subpart VVV specifies recordkeeping of records of applicability determination.
§ 63.1(c)(1)	Yes	Requires compliance with both subpart A and subpart VVV.
§ 63.1(c)(2)(i)	Yes	State options regarding title V permit.
§ 63.1(c)(2)(ii)–(iii)	No	State options regarding title V permit.
§ 63.1(c)(3)	Yes	Section reserved.
§ 63.1(c)(4)	Yes	Extension of compliance.
§ 63.1(c)(5)	No	Subpart VVV addresses area sources becoming major due to increase in emissions.
§ 63.1(d)	Yes	Section reserved.
§ 63.1(e)	Yes	Title V permit before a relevant standard is established.
§ 63.2	Yes	DEFINITIONS.
§ 63.3	Yes	UNITS AND ABBREVIATIONS.
§ 63.4		PROHIBITED ACTIVITIES AND CIRCUMVENTION.
§ 63.4(a)(1)–(3)	Yes	Prohibits operation in violation of subpart A.
§ 63.4(a)(4)	Yes	Section reserved.
§ 63.4(a)(5)	Yes	Compliance dates.
§ 63.4(b)	Yes	Circumvention.
§ 63.4(c)	Yes	Severability.
§ 63.5		CONSTRUCTION AND RECONSTRUCTION.
§ 63.5(a)(1)	Yes	Construction and reconstruction.
§ 63.5(a)(2)	Yes	New source—effective dates.
§ 63.5(b)(1)	Yes	New sources subject to relevant standards.
§ 63.5(b)(2)	Yes	Section reserved.
§ 63.5(b)(3)	Yes	No new major sources w/out Administrator approval.
§ 63.5(b)(4)	Yes	New major source notification.
§ 63.5(b)(5)	Yes	New major sources must comply.
§ 63.5(b)(6)	Yes	New equipment added considered part of major source.
§ 63.5(c)	Yes	Section reserved.
§ 63.5(d)(1)	Yes	Implementation of section 112(i)(2)—application of approval of new source construction.
§ 63.5(d)(2)	Yes	Application for approval of construction for new sources listing and describing planned air pollution control system.
§ 63.5(d)(3)	Yes	Application for reconstruction.
§ 63.5(d)(4)	Yes	Administrator may request additional information.
§ 63.5(e)	Yes	Approval of reconstruction.
§ 63.5(f)(1)	Yes	Approval based on State review.

TABLE 1 TO SUBPART VVV—APPLICABILITY OF 40 CFR PART 63 GENERAL PROVISIONS TO SUBPART VVV—Continued

General provisions reference	Applicable to subpart VVV	Explanation
§ 63.5(f)(2)	Yes	Application deadline.
§ 63.6		COMPLIANCE WITH STANDARDS AND MAINTENANCE REQUIREMENTS.
§ 63.6(a)	Yes	Applicability of compliance with standards and maintenance requirements.
§ 63.6(b)	Yes	Compliance dates for new and reconstructed sources.
§ 63.6(c)	Yes	Compliance dates for existing sources apply to existing industrial POTW treatment plants.
§ 63.6(d)	Yes	Section reserved.
§ 63.6(e)	Yes	Operation and maintenance requirements apply to new sources.
§ 63.6(f)	Yes	Compliance with non-opacity emission standards applies to new sources.
§ 63.6(g)	Yes	Use of alternative non-opacity emission standards applies to new sources.
§ 63.6(h)	No	POTW treatment plants do not typically have visible emissions.
§ 63.6(i)	Yes	Extension of compliance with emission standards applies to new sources.
§ 63.6(j)	Yes	Presidential exemption from compliance with emission standards.
§ 63.7		PERFORMANCE TESTING REQUIREMENTS.
§ 63.7(a)	Yes	Performance testing is required for new sources.
§ 63.7(b)	Yes	New sources must notify the Administrator of intention to conduct performance testing.
§ 63.7(c)	Yes	New sources must comply with quality assurance program requirements.
§ 63.7(d)	Yes	New sources must provide performance testing facilities at the request of the Administrator.
§ 63.7(e)	Yes	Requirements for conducting performance tests apply to new sources.
§ 63.7(f)	Yes	New sources may use an alternative test method.
§ 63.7(g)	Yes	Requirements for data analysis, recordkeeping, and reporting associated with performance testing apply to new sources.
§ 63.7(h)	Yes	New sources may request a waiver of performance tests.
§ 63.8		MONITORING REQUIREMENTS.
§ 63.8(a)	Yes	Applicability of monitoring requirements.
§ 63.8(b)	Yes	Monitoring shall be conducted by new sources.
§ 63.8(c)	Yes	New sources shall operate and maintain continuous monitoring systems (CMS).
§ 63.8(d)	Yes	New sources must develop and implement a CMS quality control program.
§ 63.8(e)	Yes	New sources may be required to conduct a performance evaluation of CMS.
§ 63.8(f)	Yes	New sources may use an alternative monitoring method.
§ 63.8(g)	Yes	Requirements for reduction of monitoring data.
§ 63.9		NOTIFICATION REQUIREMENTS.
§ 63.9(a)	Yes	Applicability of notification requirements.
§ 63.9(b)	Yes	Initial notification requirements.
§ 63.9(c)	Yes	Request for extension of compliance with subpart VVV.
§ 63.9(d)	Yes	Notification that source is subject to special compliance requirements as specified in § 63.6(b)(3) and (4).
§ 63.9(e)	Yes	Notification of performance test.
§ 63.9(f)	No	POTW treatment plants do not typically have visible emissions.
§ 63.9(g)	Yes	Additional notification requirements for sources with continuous emission monitoring systems.
§ 63.9(h)	Yes	Notification of compliance status when the source becomes subject to subpart VVV.
§ 63.9(i)	Yes	Adjustments to time periods or postmark deadlines or submittal and review of required communications.
§ 63.9(j)	Yes	Change of information already provided to the Administrator.
§ 63.10		RECORDKEEPING AND REPORTING REQUIREMENTS.
§ 63.10(a)	Yes	Applicability of notification and reporting requirements.
§ 63.10(b)(1)–(2)	Yes	General recordkeeping requirements.
§ 63.10(b)(3)	No	Recording requirement for applicability determination.
§ 63.10(c)	Yes	Additional recordkeeping requirements for sources with continuous monitoring systems.
§ 63.10(d)	Yes	General reporting requirements.
§ 63.10(e)	Yes	Additional reporting requirements for sources with continuous monitoring systems.
§ 63.10(f)	Yes	Waiver of recordkeeping and reporting requirements.
§ 63.11		FLARES AS A CONTROL DEVICE.
§ 63.11(a) and (b)	Yes	If a new source uses flares to comply with the requirements of subpart VVV, the requirements of § 63.11 apply.
§ 63.12	Yes	STATE AUTHORITY AND DESIGNATION.
§ 63.13	Yes	ADDRESSES OF STATE AIR POLLUTION CONTROL AGENCIES AND EPA REGIONAL OFFICES.

TABLE 1 TO SUBPART VVV—APPLICABILITY OF 40 CFR PART 63 GENERAL PROVISIONS TO SUBPART VVV—Continued

General provisions reference	Applicable to subpart VVV	Explanation
§ 63.14	Yes	INCORPORATION BY REFERENCE.
§ 63.15	Yes	AVAILABILITY OF INFORMATION AND CONFIDENTIALITY.

[FR Doc. 99-27799 Filed 10-25-99; 8:45 am]

BILLING CODE 6560-50-P

FEDERAL COMMUNICATIONS COMMISSION

47 CFR Part 0

[FCC 99-176]

Interception and Recording of Telephone Conversations by Commission Personnel

AGENCY: Federal Communications Commission.

ACTION: Final rule.

SUMMARY: This document amends the rules with respect to the interception and recording of telephone conversations by agency personnel. The rules are being amended because the current GSA regulations have been repealed. The amended rules no longer make reference to the GSA regulations and the rule amendments clarify that the Inspector General has authority to intercept or monitor telephone conversations without obtaining a written authorization from the General Counsel.

DATES: Effective October 26, 1999.

FOR FURTHER INFORMATION CONTACT: Sharon Diskin, Office of General Counsel, (202) 418-1720.

SUPPLEMENTARY INFORMATION:

Adopted: July 13, 1999.

Released: July 16, 1999.

1. Sections 0.41(l) and 0.251(f) of our rules, 47 CFR 0.41(l) and 0.251(f) govern the duties and responsibilities of the Office of General Counsel with respect to the interception and recording of telephone conversations by agency personnel. The rules currently in effect refer to and reflect General Service Administration (GSA) regulations regarding the interception of telephone conversations. These GSA regulations have been repealed. Because GSA regulations no longer contain any specific provisions regarding the manner in which government agencies monitor the interception and recording of telephone conversations by agency personnel, we are amending our rule to delete reference to these regulations. The authority of the Office of the General Counsel to issue any necessary written determinations with respect to these matters remains generally unchanged. However, because the Office of the Inspector General may deem it necessary to intercept or monitor telephone conversations in the conduct of audits or investigations, the rule amendments clarify that the Inspector General has such authority to do so without obtaining a written authorization from the Office of General Counsel.

2. Because these rule changes involve rules of agency organization, procedure or practice, prior notice and public comment procedures are not required. *See* 5 U.S.C. 553 (b)(3)(A).

3. Pursuant to sections 4(i), 4(j), 5(c), and 303(r) of the Communications Act of 1934, as amended, 47 U.S.C. 154(i) and (j), 155(c) and 303(r), it is *hereby ordered* that Part 0 of the Commission's Rules is amended and effective October 26, 1999.

List of Subjects in 47 CFR Part 0

Organization and functions (Government agencies), Privacy.

Federal Communications Commission.

Magalie Roman Salas,

Secretary.

Rule Changes

Part 0 of Title 47 of the Code of Federal Regulations is amended to read as follows:

PART 0—COMMISSION ORGANIZATION

1. The authority citation for Part 0 continues to read as follows:

Authority: Sec. 5, 48 Stat. 1068, as amended; 47 U.S.C. 155, 225 unless otherwise noted.

2. Section 0.41(k) is revised to read as follows:

§ 0.41 Functions of the Office.

* * * * *

(k) To issue determinations on matters regarding the interception and recording of telephone conversations by Commission personnel. Nothing in this paragraph, however, shall affect the authority of the Inspector General to intercept or record telephone conversations as necessary in the conduct of investigations or audits.

* * * * *

3. Section 0.251(f) is revised to read as follows:

§ 0.251 Authority delegated.

* * * * *

(f) The General Counsel is delegated authority to issue written determinations on matters regarding the interception of telephone conversations. Nothing in this paragraph, however, shall affect the authority of the Inspector General to intercept or record telephone conversations as necessary in the conduct of investigations or audits.

* * * * *

[FR Doc. 99-27427 Filed 10-25-99; 8:45 am]

BILLING CODE 6712-01-P

DEPARTMENT OF COMMERCE

National Oceanic and Atmospheric Administration

50 CFR Part 622

[I.D. 102099B]

Fisheries of the Caribbean, Gulf of Mexico, and South Atlantic; Reef Fish Fishery of the Gulf of Mexico; Closure of the Commercial Red Snapper Component

AGENCY: National Marine Fisheries Service (NMFS), National Oceanic and Atmospheric Administration (NOAA), Commerce.

ACTION: Notice of closure.

SUMMARY: NMFS closes the commercial fishery for red snapper in the exclusive economic zone (EEZ) of the Gulf of Mexico. NMFS projects that the initial portion of the annual commercial quota for red snapper will be reached on November 5, 1999. This closure is necessary to protect the red snapper resource.

DATES: Effective noon, local time, November 5, 1999, until noon, local time, February 1, 2000.

FOR FURTHER INFORMATION CONTACT: Dr. Roy E. Crabtree, 727-570-5305.

SUPPLEMENTARY INFORMATION: The reef fish fishery of the Gulf of Mexico is managed under the Fishery

North 5th Street, Kansas City, Kansas 66101; the Office of Federal Register, 800 North Capitol Street, NW, Suite 700, Washington, DC; or at EPA Air and Radiation Docket and Information Center, Air Docket (6102), 401 M Street, SW, Washington, DC 20460.

* * * * *

[FR Doc. 99-30239 Filed 11-19-99; 8:45 am]

BILLING CODE 6560-50-P

ENVIRONMENTAL PROTECTION AGENCY

40 CFR Part 63

[AD-FRL-6478-6]

RIN 2060-AI53

National Emission Standards for Hazardous Air Pollutants: Generic Maximum Achievable Control Technology (Generic MACT); Process Wastewater Provisions

AGENCY: Environmental Protection Agency (EPA).

ACTION: Final rule; amendments.

SUMMARY: On June 29, 1999 (64 FR 34854), we promulgated a consolidated rulemaking that included standards for four specific source categories (i.e., acetal resins (AR), acrylic and modacrylic fiber (AMF), hydrogen fluoride (HF) and polycarbonate (PC) production), and general control requirements for certain types of emission points for hazardous air pollutants (HAP).

At the time of promulgation of the consolidated rulemaking, we deferred taking final action regarding provisions applicable to wastewater streams for the AR, AMF, and PC production source categories based on a need to propose significant changes to the wastewater provisions that were proposed on October 14, 1998 (63 FR 55178). The HF production source category does not have wastewater streams. In parallel with the promulgated consolidated rulemaking package, we published a supplemental notice of proposed rulemaking regarding wastewater provisions (64 FR 34950) applicable to wastewater streams for the AR, AMF, and PC production source categories and reopened the public comment period regarding those proposed wastewater provisions.

Today's action promulgates wastewater provisions amendments applicable to wastewater streams for the AR, AMF, and PC production source categories based on our response to comments received on the wastewater provisions proposed on June 29, 1999 (64 FR 34950).

EFFECTIVE DATE: November 22, 1999.

ADDRESSES: Docket No. A-97-17 contains supporting information used in developing the standards. The docket is located at the U.S. Environmental Protection Agency, 401 M Street, SW, Washington, DC 20460 in room M-1500, Waterside Mall (ground floor), and may be inspected from 8:30 a.m. to 5:30 p.m., Monday through Friday, excluding legal holidays.

FOR FURTHER INFORMATION CONTACT: For information concerning the final wastewater provision amendments, contact David W. Markwordt at the Emission Standards Division (MD-13), U.S. Environmental Protection Agency, Research Triangle Park, North Carolina 27711; telephone number (919) 541-0837, facsimile (919) 541-0942, e-mail address markwordt.david@epa.gov.

SUPPLEMENTARY INFORMATION:

Docket

The docket is an organized and complete file of all the information considered by the EPA in the development of this rulemaking. The docket is a dynamic file because material is added throughout the rulemaking process. The docketing system is intended to allow members of the public and industries involved to readily identify and locate documents so that they can effectively participate in the rulemaking process. Along with the proposed and promulgated standards and their preambles, the contents of the docket will serve as the record in the case of judicial review. (See section 307(d)(7)(A) of the Clean Air Act (Act).) The regulatory text and other materials related to this rulemaking are available for review in the docket or copies may be mailed on request from the Air Docket by calling (202) 260-7548. A reasonable fee may be charged for copying docket materials.

Technical Support Document.

The wastewater amendments promulgated today are supported by a supplementary information memorandum that contains a summary of the public comments received on the proposed wastewater provision amendments and our response to those comments. This memorandum may be obtained from the docket for this rule, A-97-17 (see *Docket*). The title of the memorandum is "Generic Maximum Achievable Control Technology—Supplementary Information for Acetal Resins, Acrylic and Modacrylic Fiber, and Polycarbonate Production Wastewater Provisions." The Supplementary Notice of Proposed Rulemaking (SNPR), the promulgated regulatory text, and supporting documentation are available in Docket No. A-97-17 or by request from our Air and Radiation Docket and Information Center (see **ADDRESSES**).

Technology Transfer Network

In addition to being available in the docket, an electronic copy of today's amendments is also available through the Technology Transfer Network (TTN). Following signature, a copy of the rule will be posted on the TTN's policy and guidance page for newly proposed or promulgated rules *http://www.epa.gov/ttn/oarpg*. The TTN provides information and technology exchange in various areas of air pollution control. If more information regarding the TTN is needed, call the TTN HELP line at (919) 541-5384.

Plain Language

In compliance with President Clinton's June 1, 1998 Executive Memorandum on Plain Language in government writing, this preamble is written using plain language. Thus, the use of "we" in this notice refers to the EPA. The use of "you" refers to the reader, and may include industry; State, local, and tribal governments; environmental groups; and other interested individuals.

Regulated Entities

Entities potentially regulated are those that produce AR, AMF, and PC and are major sources of HAP as defined in section 112 of the Act. Regulated categories and entities include:

Category	Regulated entities [a]
Industry	Producers of homopolymers and/or copolymers of alternating oxymethylene units. Producers of either acrylic fiber or modacrylic fiber synthetics composed of acrylonitrile (AN) units.

Category	Regulated entities [a]
	Producers of polycarbonate.

[a] This table is not intended to be exhaustive, but rather provides a guide for readers regarding entities likely to be regulated by this action. This table lists the types of entities that the EPA is now aware could potentially be regulated by this action. Other types of entities not listed in the table could also be regulated. To determine whether your facility, company, business, organization, etc., is regulated by this action, you should carefully examine the applicability criteria in § 63.1104(a)(1), (b)(1), (c)(1), and (d)(1) of the rule. If you have questions regarding the applicability of this action to a particular entity, consult the person listed in the preceding **FOR FURTHER INFORMATION CONTACT** section.

Judicial review. Under section 307(b)(1) of the Act, judicial review of these final wastewater provision amendments is available only by filing a petition for review in the United States Court of Appeals for the District of Columbia Circuit by January 21, 2000. Under section 307(d)(7)(B) of the Act, only an objection to these wastewater provisions amendments which was raised with reasonable specificity during the period for public comment can be raised during judicial review. Moreover, under section 307(b)(2) of the Act, the requirements established by today's final action may not be challenged separately in any civil or criminal proceeding we bring to enforce these requirements.

I. What Is the Background for These Wastewater Provision Amendments?

On June 29, 1999 (64 FR 34854), we promulgated a consolidated rulemaking that included generic MACT standards under section 112 of the Act for certain small source categories consisting of five or fewer sources. At that time, we proposed amendments to the provisions applicable to wastewater and certain liquid streams in open systems and deferred taking final action on those provisions until now. Today's action finalizes these amendments based on comments received on the proposed amendments and our response to those comments.

II. Compliance Dates

The compliance dates for the standards promulgated on June 29, 1999 (64 FR 34854) for the AR, AMF, and PC production source categories are July 1, 2002 for existing sources and upon startup after June 29, 1999 for new sources. Additional compliance time is not warranted for existing sources, and there have not been any new AR, AMF, and PC production facilities that would warrant specifying a different compliance date for new sources. Therefore, although we deferred action on the wastewater provisions for the AR, AMF, and PC production source categories, the dates for compliance with the wastewater provisions adopted by this action will be the same as for the other provisions we previously promulgated on June 29, 1999.

III. Comments Received on the Proposed Wastewater Provisions Amendments

We received no major comments on the wastewater provisions amendments proposed on June 29, 1999 (64 FR 34950). We have made limited clarifying changes and some editorial changes in response to comments received. Clarifying changes include (1) amending 40 CFR part 63, subpart YY by replacing the term "chemical manufacturing process unit" and "CMPU" with the phrase "a process unit whose primary product is a product produced by a source category subject to this subpart"; (2) amending 40 CFR part 63, subpart YY applicability tables for process wastewater requirements to reflect that both Group 1 and Group 2 wastewater streams are subject to requirements under § 63.1106(a); and (3) amending 40 CFR part 63, subpart YY to clarify that when a source subject to this subpart is colocated with a Synthetic Organic Chemical Manufacturing Industry (SOCMI) source, and a single wastewater treatment facility treats similar wastewaters from both sources, a certification by the treatment facility that they will manage and treat the waste in conformity with the specific control requirements set forth in 40 CFR 63.133 through 63.147 will also be deemed sufficient to satisfy the certification requirements for the generic MACT wastewater provisions.

A supplementary information memorandum that contains a summary of the public comments received on the proposed wastewater provisions amendments and our response to those comments may be obtained from the docket for this rule, A-97-17 (see *Docket*).

IV. Summary of Final Wastewater Provisions Amendments

The final wastewater provisions amendments incorporate and cross-reference wastewater provisions of the HON for the AR, AMF, and PC production source categories. These final amendments respond to comments received on the proposed wastewater provisions published on October 14, 1998 (63 FR 55178), and the proposed amendments to those provisions published on June 29, 1999 (64 FR 34950). In addition, these final amendments reflect our original intent regarding "point of determination" measurements and "treatment and destruction" requirements for process wastewater, and that requirements for maintenance wastewater and liquid streams in open systems be included.

The final amendments for process wastewater, maintenance wastewater, and liquid streams in open systems within the regulated process unit directly refer to HON wastewater requirements. For process wastewater, you are required to make a group determination for each wastewater stream based on flow rate and organic HAP concentration. If a process wastewater stream is determined to be Group 1, you must comply with specific requirements for waste management units to suppress emissions, and requirements to treat the wastewater streams to reduce the organic HAP concentration. The suppression requirements in the referenced sections of the HON are equivalent in stringency to the wastewater requirements that were initially proposed on October 14, 1998 (63 FR 55178) for most emissions points associated with wastewater streams.

The maintenance wastewater provisions require, for each maintenance wastewater stream that contains organic HAP, that you develop and follow procedures to manage wastewaters generated during maintenance activities so that emissions are minimized. The provisions for liquid streams in open systems apply to drain or drain hubs, manholes, lift stations, trenches, pipes, oil/water separators, and tanks within the regulated process unit, and require that you implement specific emission reduction techniques for each type of equipment.

V. Summary of Impacts

We estimate that the impacts for air emissions will be negligible because AR, AMF, and PC production affected sources that will be subject to these requirements are already well controlled. Similarly, water pollution and solid waste, and increases in energy use resulting from the use of control devices will be negligible. Based on

previous impacts analyses associated with the application of the control and recovery devices required under the standards and because each of the three subject source categories have only five or fewer major sources, we believe that there will be minimal, if any, adverse environmental or energy impacts associated with the final amendments.

Likewise, based on available information, we estimate that the cost and economic impacts of the final wastewater provisions amendments for the three source categories being regulated will be insignificant or minimal. The economic analyses for each of the three source categories can be obtained from the docket (see *Docket*).

VI. Administrative Requirements

A. Paperwork Reduction Act

The information collection requirements associated with these wastewater provisions amendments do not add to the promulgated rule information collection requirements. The information collection requirements of the promulgated rule for the generic MACT standards were submitted for approval to the Office of Management and Budget (OMB) under the *Paperwork Reduction Act*, 44 U.S.C. 3501, *et seq.* Under the promulgated rule, we prepared an Information Collection Request (ICR) document (ICR No. 1750.01) and a copy may be obtained from Sandy Farmer, OPPE Regulatory Information Division, U.S. Environmental Protection Agency (2137), 401 M Street, SW, Washington, DC 20460, or by calling (202) 260–2740. We may not conduct or sponsor, and a person is not required to respond to a collection of information unless it displays a currently valid OMB control number. The OMB control numbers for our regulations are listed in 40 CFR part 9 and 48 CFR chapter 15. The OMB approved the information collection requirements for the AR, AMF, and PC production source categories and assigned the OMB control number 2060–0420 to the ICR. This approval expires September 30, 2002.

B. Executive Order 12866

Under Executive Order 12866 (58 FR 51735, October 4, 1993), we must determine whether a regulatory action is "significant" and therefore subject to OMB review and the requirements of the Executive Order. The Order defines "significant regulatory action" as one that is likely to result in a rule that may:

(1) Have an annual effect on the economy of $100 million or more or adversely affect in a material way the economy, a sector of the economy, productivity, competition, jobs, the environment, public health or safety, or State, local, or tribal governments or communities;

(2) Create a serious inconsistency or otherwise interfere with an action taken or planned by another agency;

(3) Materially alter the budgetary impact of entitlements, grants, user fees, or loan programs or the rights and obligations of recipients thereof; or

(4) Raise novel legal or policy issues arising out of legal mandates, the President's priorities, or the principles set forth in the Executive Order.

The final wastewater provisions amendments for AR, AMF, and PC production do not constitute a "significant regulatory action" as defined under Executive Order 12866, and therefore, are not subject to review by OMB.

C. Executive Order 13132 (Federalism)

Executive Order 13132, entitled "Federalism" (64 FR 43255, August 10, 1999), requires EPA to develop an accountable process to ensure "meaningful and timely input by State and local officials in the development of regulatory policies that have federalism implications." "Policies that have federalism implications" is defined in the Executive Order to include regulations that have "substantial direct effects on the States, on the relationship between the national government and the States, or on the distribution of power and responsibilities among the various levels of government." Under Executive Order 13132, EPA may not issue a regulation that has federalism implications, that imposes substantial direct compliance costs, and that is not required by statute, unless the Federal government provides the funds necessary to pay the direct compliance costs incurred by State and local governments, or EPA consults with State and local officials early in the process of developing the proposed regulation. EPA also may not issue a regulation that has federalism implications and that preempts State law unless the Agency consults with State and local officials early in the process of developing the proposed regulation.

If EPA complies by consulting, Executive Order 13132 requires EPA to provide to the Office of Management and Budget (OMB), in a separately identified section of the preamble to the rule, a federalism summary impact statement (FSIS). The FSIS must include a description of the extent of EPA's prior consultation with State and local officials, a summary of the nature of their concerns and the agency's position supporting the need to issue the regulation, and a statement of the extent to which the concerns of State and local officials have been met. Also, when EPA transmits a draft final rule with federalism implications to OMB for review pursuant to Executive Order 12866, EPA must include a certification from the agency's Federalism Official stating that EPA has met the requirements of Executive Order 13132 in a meaningful and timely manner.

This final rule will not have substantial direct effects on the States, on the relationship between the national government and the States, or on the distribution of power and responsibilities among the various levels of government, as specified in Executive Order 13132. This rule has minimal direct affects on the 9 plants which are impacted by this rule. This rule has even less impacts on States within which the plants reside. Thus,the requirements of section 6 of the Executive Order do not apply to this rule.

D. Regulatory Flexibility Act/Small Business Regulatory Enforcement Fairness Act of 1996

Under the Regulatory Flexibility Act (RFA) of 1980 (5 U.S.C. 601, *et seq.*), as amended by the Small Business Regulatory Enforcement Fairness Act of 1996 (SBREFA), we are required to give special consideration to the effect of Federal regulations on small entities and to consider regulatory options that might mitigate any such impacts.

Today's action is not subject to the requirements of the RFA as modified by SBREFA because it does not impose any regulatory requirements on small entities.

E. Unfunded Mandates Reform Act

Under section 202 of the Unfunded Mandates Reform Act of 1995 (Unfunded Mandates Act), we must prepare a budgetary impact statement to accompany any proposed or final rule that includes a Federal mandate that may result in estimated costs to State, local, or tribal governments in the aggregate, or to the private sector, of $100 million or more in any 1 year. Under section 203, we are required to establish a plan for obtaining input from and informing, educating, and advising any small governments that may be significantly or uniquely affected by the rule. Under section 205 of UMRA, we must identify and consider a reasonable number of regulatory alternatives before promulgating a rule for which a budgetary impact statement must be prepared. We are required to select the

least burdensome alternative for State, local, and tribal governments and the private sector that achieves the objectives of the rule, unless we explain why this alternative is not selected or unless the selection of this alternative is inconsistent with law.

Because the promulgated rule and these final amendments to the rule do not include a Federal mandate and are estimated to result in expenditures less than $100 million in any 1 year by State, local, and tribal governments, we have not prepared a budgetary impact statement or specifically addressed the selection of the least costly, most cost-effective, or least burdensome alternative. In addition, because small governments would not be significantly or uniquely affected by this rule, we are not required to develop a plan with regard to small governments. Therefore, the requirements of the UMRA do not apply to this action.

F. National Technology Transfer and Advancement Act

Under section 12(d) of the National Technology Transfer and Advancement Act of 1995 (NTTAA), Pub. L. 104–113, section 12(d) (15 U.S.C. 272 note), we are directed to use voluntary consensus standards instead of government-unique standards in our regulatory activities unless to do so would be inconsistent with applicable law or otherwise impractical. By doing so, the Act is intended to reduce the cost to the private and public sectors.

Voluntary consensus standards are technical standards (e.g., materials specifications, test methods, sampling procedures, business practices, etc.) that are developed or adopted by voluntary consensus standard bodies. We are required by the NTTAA to provide Congress, through OMB, explanations when we decide not to use available and applicable voluntary consensus standards.

As part of a larger effort, we are undertaking a project to cross-reference existing voluntary consensus standards on testing, sampling, and analysis, with current and future EPA test methods. When completed, this project will assist us in identifying potentially-applicable voluntary consensus standards that can then be evaluated for equivalency and applicability in determining compliance with future regulations.

This action does not involve the promulgation of any new technical standards. It does, however, cross-reference existing technical standards, including government-unique technical standards that have been proposed and promulgated under other rulemakings for similar source control applicability and compliance determinations, therefore section 12(d) does not apply.

G. Executive Order 13045

Executive Order 13045, entitled Protection of Children from Environmental Health Risks and Safety Risks (62 FR 19885, April 23, 1997), applies to any rule that we determine (1) is economically significant as defined under Executive Order 12866, and (2) the environmental health or safety risk addressed by the rule has a disproportionate effect on children. If the regulatory action meets both criteria, we must evaluate the environmental health or safety effects of the planned rule on children and explain why the planned regulation is preferable to other potentially effective and reasonably feasible alternatives we considered.

This amendatory action is not subject to Executive Order 13045 because it does not constitute an economically significant regulatory action as defined by Executive Order 12866 and because it does not establish an environmental standard intended to mitigate health or safety risks.

H. Executive Order 13084

Under Executive Order 13084, we may not issue a regulation that is not required by statute, that significantly or uniquely affects the communities of Indian tribal governments, and that imposes substantial direct compliance costs on those communities, unless the Federal government provides the funds necessary to pay the direct compliance cost incurred by the tribal governments, or we consult with those governments. If we comply by consulting, we are required to provide to OMB, in a separately identified section of the preamble to the rule, a description of the extent of our prior consultation with representatives of affected tribal governments, a summary of the nature of their concerns, and a statement supporting the need to issue the regulation. In addition, we are required to develop an effective process permitting elected officials and other representatives of Indian tribal governments "to provide meaningful and timely input in the development of regulatory policies on matters that significantly or uniquely affect their communities."

Today's amendments implement requirements specifically set forth by Congress in section 112 of the Act without the exercise of any discretion by us. Accordingly, the requirements of section 3(b) of Executive Order 13084 do not apply to this rule.

I. Congressional Review Act

Under the Small Business Regulatory Enforcement Fairness Act of 1996, we submitted a report containing these final amendments and other required information to the U.S. Senate, the U.S. House of Representatives, and the Comptroller General of the General Accounting Office prior to publication of these final amendments in the **Federal Register**. This is not a "major rule" as defined by the Small Business Regulatory Enforcement Fairness Act.

List of Subjects in 40 CFR Part 63

Environmental protection, Acetal resins production, Acrylic and modacrylic fiber production, Air emissions control, Hazardous air pollutants, Polycarbonates production, Process wastewater streams, Wastewater.

Dated: November 15, 1999.

Carol M. Browner,

Administrator.

For the reasons set out in the preamble, title 40, chapter I, part 63 of the Code of Federal Regulations is amended as follows:

PART 63—NATIONAL EMISSION STANDARDS FOR HAZARDOUS AIR POLLUTANTS FOR SOURCE CATEGORIES

1. The authority citation for part 63 continues to read as follows:

Authority: 42 U.S.C. 7401 *et seq.*

Subpart YY—National Emission Standards for Hazardous Air Pollutants for Source Categories: Generic Maximum Achievable Control Technology Standards

2. Section 63.1100 is amended by adding paragraph (g)(5) as follows:

§ 63.1100 Applicability.

* * * * *

(g) * * *

(5) *Overlap of subpart YY with other regulations for wastewater.* (i) After the compliance dates specified in § 63.1102 for an affected source subject to this subpart, a wastewater stream that is subject to the wastewater requirements of this subpart and the wastewater requirements of subparts F, G, and H of this part (collectively known as the "HON") shall be deemed to be in compliance with the requirements of this subpart if it complies with either set of requirements. In any instance where a source subject to this subpart is colocated with a Synthetic Organic Chemical Manufacturing Industry (SOCMI) source, and a single wastewater treatment facility treats both

Group 1 wastewaters and wastewater residuals from the source subject to this subpart and wastewaters from the SOCMI source, a certification by the treatment facility that they will manage and treat the waste in conformity with the specific control requirements set forth in 40 CFR 63.133 through 63.147 will also be deemed sufficient to satisfy the certification requirements for wastewater treatment under this subpart.

(ii) After the compliance dates specified in § 63.1102 for an affected source subject to this subpart, a wastewater stream that is subject to control requirements in the Benzene Waste NESHAP (subpart FF of part 61 of this chapter) and this subpart is required to comply with both rules.

3. Section 63.1101 is amended by adding definitions in alphabetical order to read as follows:

§ 63.1101 Definitions.

* * * * *

Annual average concentration, as used in the wastewater provisions, means the flow-weighted annual average concentration, as determined according to the procedures specified in § 63.144(b).

Annual average flow rate, as used in the wastewater provisions, means the annual average flow rate, as determined according to the procedures specified in § 63.144(c).

* * * * *

Group 1 wastewater stream means a process wastewater stream at an existing or new source that meets the criteria for Group 1 status in § 63.132(c).

Group 2 wastewater stream means a process wastewater stream that does not meet the definition of a Group 1 wastewater stream.

* * * * *

Maintenance wastewater means wastewater generated by the draining of process fluid from components in the process unit, whose primary product is a product produced by a source category subject to this subpart, into an individual drain system prior to or during maintenance activities. Maintenance wastewater can be generated during planned and unplanned shutdowns and during periods not associated with a shutdown. Examples of activities that can generate maintenance wastewaters include descaling of heat exchanger tubing bundles, cleaning of distillation column traps, draining of low legs and high point bleeds, draining of pumps into an individual drain system, and draining of portions of the process unit, whose primary product is a product produced by a source category subject to this subpart, for repair.

* * * * *

Oil-water separator or *organic-water separator* means a waste management unit, generally a tank used to separate oil or organics from water. An oil-water or organic-water separator consists of not only the separation unit but also the forebay and other separator basins, skimmers, weirs, grit chambers, sludge hoppers, and bar screens that are located directly after the individual drain system and prior to additional waste management units such as an air flotation unit, clarifier, or biological treatment unit. Examples of an oil-water or organic-water separator include, but are not limited to, an American Petroleum Institute separator, parallel-plate interceptor, and corrugated-plate interceptor with the associated ancillary equipment.

* * * * *

Point of determination means each point where process wastewater exits the process unit, whose primary product is a product produced by a source category subject to this subpart.

Note to definition for point of determination: The regulation allows determination of the characteristics of a wastewater stream at the point of determination or downstream of the point of determination if corrections are made for changes in flow rate and annual average concentration of Table 9 compounds (as defined under this subpart) as determined in § 63.144. Such changes include losses by air emissions, reduction of annual average concentration or changes in flow rate by mixing with other water or wastewater streams, and reduction in flow rate or annual average concentration by treating or otherwise handling the wastewater stream to remove or destroy hazardous air pollutants.

* * * * *

Process wastewater means wastewater which, during manufacturing or processing, comes into direct contact with or results from the production or use of any raw material, intermediate product, finished product, by-product, or waste product. Examples are product tank drawdown or feed tank drawdown, water formed during a chemical reaction or used as a reactant, water used to wash impurities from organic products or reactants, equipment washes between batches in a batch process, water used to cool or quench organic vapor streams through direct contact, and condensed steam from jet ejector systems pulling vacuum on vessels containing organics.

Process wastewater stream means a stream that contains process wastewater.

* * * * *

Table 9 compounds means compounds listed in Table 9 of subpart G of this part.

* * * * *

Wastewater is either a process wastewater or a maintenance wastewater and means water that:

(1) Contains either:

(i) An annual average concentration of Table 9 compounds (as defined under this subpart) of at least 5 parts per million by weight at the point of determination and has an annual average flow rate of 0.02 liter per minute or greater, or

(ii) An annual average concentration of Table 9 compounds (as defined under this subpart) of at least 10,000 parts per million by weight at the point of determination at any flow rate, and that

(2) Is discarded from a process unit, whose primary product is a product produced by a source category subject to this subpart.

Wastewater stream means a stream that contains wastewater.

* * * * *

4. Section 63.1103 is amended by:

a. Adding entries 6, 7, and 8 in table 1 of paragraph (a)(3);

b. Adding entries 8, 9, and 10 in table 2 of paragraph (b)(3)(i);

c. Adding entries 7, 8, and 9 in table 5 of paragraph (d)(3); and

d. Adding entries 6, 7, and 8 in table 6 of paragraph (d)(3) as follows:

§ 63.1103 Source category-specific applicability, definitions, and requirements.

* * * * *

(a) * * *

(3) * * *

TABLE 1. TO § 63.1103.—WHAT ARE MY REQUIREMENTS IF I OWN OR OPERATE AN ACETAL RESINS PRODUCTION EXISTING OR NEW AFFECTED SOURCE?

If you own or operate * * *	And if * * *	Then you must * * *

TABLE 1. TO § 63.1103.—WHAT ARE MY REQUIREMENTS IF I OWN OR OPERATE AN ACETAL RESINS PRODUCTION EXISTING OR NEW AFFECTED SOURCE?—Continued

If you own or operate * * *	And if * * *	Then you must * * *
* *	* * *	* *
6. An acetal resins production process unit that generates process wastewater.	The process wastewater stream is a Group 1 or Group 2 wastewater stream.	Comply with the requirements of § 63.1106(a).
7. An acetal resins production process unit that generates maintenance wastewater.	The maintenance wastewater contains organic HAP.	Comply with the requirements of § 63.1106(b).
8. An item of equipment listed in § 63.1106(c)(1).	The item of equipment meets the criteria specified in § 63.1106(c)(1) through (3) and either (c)(4)(i) or (ii).	Comply with the requirements in Table 35 of subpart G of this part.

* * * * *

(b) * * *

(3) * * *

(i) * * *

TABLE 2. TO § 63.1103.—WHAT ARE MY REQUIREMENTS IF I OWN OR OPERATE AN ACRYLIC AND MODACRYLIC FIBER PRODUCTION EXISTING OR NEW AFFECTED SOURCE AND AM COMPLYING WITH PARAGRAPH (B)(3)(I) OF THIS SECTION?

If you own or operate * * *	And if * * *	Then you must * * *
* *	* * *	* *
8. An acrylic and modacrylic fiber production process unit that generates process wastewater.	The process wastewater stream is a Group 1 or Group 2 wastewater stream.	Comply with the requirements of § 63.1106(a).
9. An acrylic and modacrylic fiber production process unit that generates maintenance wastewater.	The maintenance wastewater contains organic HAP.	Comply with the requirements of § 63.1106(b).
10. An item of equipment listed in § 63.1106(c)(1).	The item of equipment meets the criteria specified in § 63.1106(c)(1) through (3) and either (c)(4)(i) or (ii).	Comply with the requirements in Table 35 of subpart G of this part.

* * * * *

(d) * * *

(3) * * *

TABLE 5. TO § 63.1103.—WHAT ARE MY REQUIREMENTS IF I OWN OR OPERATE A POLYCARBONATE PRODUCTION EXISTING AFFECTED SOURCE?

If you own or operate * * *	And if * * *	Then you must * * *
* *	* * *	* *
7. A polycarbonate production process unit that generates process wastewater.	The process wastewater stream is a Group 1 or a Group 2 wastewater stream.	Comply with the requirements of § 63.1106(a).
8. A polycarbonate production process unit that generates maintenance wastewater.	The maintenance wastewater contains organic HAP.	Comply with the requirements of § 63.1106(b).
9. An item of equipment listed in § 63.1106(c)(1).	The item of equipment meets the criteria specified in § 63.1106(c)(1) through (3) and either (c)(4)(i) or (ii).	Comply with the requirements in Table 35 of subpart G of this part.

* * * * *

TABLE 6. TO § 63.1103.—WHAT ARE MY REQUIREMENTS IF I OWN OR OPERATE A POLYCARBONATE PRODUCTION NEW AFFECTED SOURCE?

If you own or operate * *	And if * * *	Then you must * * *
* *	* * *	* *
6. A polycarbonate production process unit that generates process wastewater.	The process wastewater stream is a Group 1 or a Group 2 wastewater stream.	Comply with the requirements of § 63.1106(a).
7. A polycarbonate production process unit that generates maintenance wastewater.	The maintenance wastewater contains organic HAP.	Comply with the requirements of § 63.1106(b).
8. An item of equipment listed in § 63.1106(c)(1).	The item of equipment meets the criteria specified in § 63.1106(c)(1) through (3) and either (c)(4)(i) or (ii).	Comply with the requirements in Table 35 of subpart G of this part.

* * * * *

5. Section 63.1106 is added to subpart YY to read as follows:

§ 63.1106 Wastewater provisions.

(a) *Process wastewater.* Except as specified in paragraphs (a)(1) through (a)(16) and paragraph (d) of this section, the owner or operator of each affected source shall comply with the HON process wastewater requirements in §§ 63.132 through 63.148.

(1) When terms used in §§ 63.132 through 63.148 are defined in § 63.1101, the definition in § 63.1101 shall apply, for the purposes of this subpart. For terms used in §§ 63.132 through 63.148 that are not defined in § 63.1101, the definitions in § 63.101 and § 63.111 shall apply.

(2) When the term chemical manufacturing production process unit, or CMPU, is used in §§ 63.132 through 63.148, the phrase "a process unit whose primary product is a product produced by a source category subject to this subpart" shall apply, for the purposes of this subpart.

(3) Owners and operators of affected sources are not required to comply with § 63.132(b)(1) and (d) and § 63.138(c). Further, owners and operators are exempt from all requirements in §§ 63.132 through 63.148 that pertain solely and exclusively to organic HAP listed in Table 8 of subpart G of this part.

(4) When the determination of equivalence criteria in § 63.102(b) is referred to in §§ 63.132, 63.133, and 63.137, the alternative nonopacity emission standard provisions in § 63.6(g) shall apply, for the purposes of this subpart.

(5) When the HON storage vessel requirements for internal floating roofs contained in § 63.119(b) are referred to in § 63.133(a)(2)(ii), the requirements in § 63.1063(a)(1)(i), (2), and (b) shall apply, for the purposes of this subpart.

(6) When the HON storage vessel requirements for external floating roofs in § 63.119(c) and § 63.120(b)(5) and (6) are referred to in § 63.133(a)(2)(iii) and (d), the requirements in § 63.1063(a)(1)(ii), (2), and (b) shall apply, for the purposes of this subpart.

(7) For the purposes of this subpart, § 63.1063(c)(2)(iv) shall apply instead of § 63.133(e).

(8) When § 63.143(c), (d), (e)(3) and § 63.146(a) require the submission of a request for approval to monitor alternative parameters according to the procedures specified in § 63.151(f) or (g), the owner or operator requesting to monitor alternative parameters shall follow the procedures specified in § 63.1108(c) or as specified in a referenced subpart.

(9) When § 63.147(d) requires the owner or operator to keep records of the daily average value of each continuously monitored parameter for each operating day as specified in § 63.152(f), the owner or operator shall keep records of each continuously monitored parameter for each operating day as specified in § 63.998(b).

(10) When § 63.132(a) and (b) refer to the "applicable dates specified in § 63.100 of subpart F of this part," the applicable compliance dates specified in § 63.1102 shall apply, for purposes of this subpart.

(11) Where § 63.152(b) and/or the Notification of Compliance Status is referred to in §§ 63.132 through 63.148, the Notification of Compliance Status requirements contained in § 63.1110(a)(3) shall apply, for purposes of this subpart.

(12) Where § 63.152(c) and/or the Periodic Report requirements are referred to §§ 63.132 through 63.148, the Periodic Report requirements contained in § 63.1110(a)(4) shall apply, for purposes of this subpart.

(13) When Method 18 of appendix A to part 60 of this chapter is specified in § 63.139(e)(1)(ii), § 63.145(d)(4), or § 63.145(i)(2), either Method 18 or Method 25A may be used. The use of Method 25A of appendix A to part 60 of this chapter shall comply with paragraphs (a)(13)(i) and (a)(13)(ii) of this section.

(i) The organic HAP used as the calibration gas for Method 25A of appendix A of part 60 of this chapter shall be the single organic HAP representing the largest percent by volume of the emissions.

(ii) The use of Method 25A of appendix A of part 60 of this chapter is acceptable if the response from the high-level calibration gas is at least 20 times the standard deviation of the response from the zero calibration gas when the instrument is zeroed on the most sensitive scale.

(14) When the HON recordkeeping requirements for by-pass lines in § 63.118(a)(3) is referred to in § 63.148(f), the requirements in § 63.998(d)(1)(ii)(A) shall apply, for the purposes of this subpart.

(15) When the Initial Notification requirements in § 63.182(b) are referred to in § 63.148(j), the requirements in § 63.1110(c) shall apply, for the purposes of this subpart.

(16) For the purposes of this subpart, § 63.148(k) shall not apply.

(b) *Maintenance wastewater.* The owner or operator of each affected source shall comply with the HON maintenance wastewater requirements in § 63.105. When terms used in § 63.105 are defined in § 63.1101, the definition in § 63.1101 shall apply, for the purpose of this subpart. For terms used in § 63.105 that are not defined in § 63.1101, the definitions in § 63.101 and § 63.111 shall apply.

(c) *Liquid streams in open systems.* The owner or operator shall comply with the provisions of Table 35 of subpart G of this part for each item of equipment meeting the criteria specified in paragraphs (c)(1) through (3) of this section and either paragraph (c)(4)(i) or (ii) of this section, with the exceptions provided in paragraphs (c)(5) and (6) of this section.

(1) The item of equipment is one of the types of equipment identified in paragraphs (c)(1)(i) through (vii) of this section.

(i) Drain or drain hub;

(ii) Manhole (including sumps and other points of access to a conveyance system);

(iii) Lift station;

(iv) Trench;

(v) Pipe;

(vi) Oil/water separator; and

(vii) Tanks with capacities of 38 m^3 or greater.

(2) The item of equipment is part of an affected source that is subject to this subpart.

(3) The item of equipment is controlled less stringently than in Table 35 of subpart G of this part, and the item of equipment is not otherwise exempt from the provisions of this subpart, or a referenced subpart.

(4) The item of equipment:

(i) Is a drain, drain hub, manhole, lift station, trench, pipe, or oil/water separator that conveys water with a total annual average concentration greater than or equal to 10,000 parts per million by weight of Table 9 compounds (as defined under this subpart) at any flow rate; or a total annual average concentration greater than or equal to 1,000 parts per million by weight of Table 9 compounds (as defined under this subpart) at an annual average flow rate greater than or equal to 10 liters per minute.

(ii) Is a tank that receives one or more streams that contain water with a total annual average concentration greater than or equal to 1,000 parts per million by weight of Table 9 compounds (as defined under this subpart) at an annual average flow rate greater than or equal to 10 liters per minute. The owner or operator shall determine the characteristics of the stream as specified in paragraphs (c)(4)(ii)(A) and (B) of this section.

(A) The characteristics of the stream being received shall be determined at the inlet to the tank.

(B) The characteristics shall be determined according to the procedures in § 63.144(b) and (c).

(5) When terms used in Table 35 of subpart G of this part are defined in § 63.1101, the definition in § 63.1101 shall apply, for the purpose of this subpart. For terms used in Table 35 of subpart G of this part that are not defined in § 63.1101, the definitions in § 63.101 and § 63.111 shall apply.

(6) When Table 35 of subpart G of this part refers to 40 CFR 63.119(e)(1) or (e)(2) in the requirements for tanks, the requirements in § 63.982(a)(1) shall apply, for purposes of this subpart.

(d) The compliance date for the affected sources subject to the provisions of this section is specified in § 63.1102.

[FR Doc. 99-30230 Filed 11-19-99; 8:45 am]

BILLING CODE 6560-50-P

ENVIRONMENTAL PROTECTION AGENCY

40 CFR Part 63

[AD-FRL-6478-8]

RIN 2060-AG91

National Emission Standards for Hazardous Air Pollutants: Generic Maximum Achievable Control Technology (Generic MACT)

AGENCY: Environmental Protection Agency (EPA).

ACTION: Final rule; corrections.

SUMMARY: On June 29, 1999, we issued the National Emission Standards for Hazardous Air Pollutants: Generic Maximum Achievable Control Technology (Generic MACT) (64 FR 34854). This final rule corrections serve to clarify and correct errors in the promulgated rule.

EFFECTIVE DATE: November 22, 1999.

FOR FURTHER INFORMATION CONTACT: For information concerning these corrections amendments, contact David W. Markwordt, Policy, Planning, and Standards Group, Emission Standards Division (MD-13), U.S. Environmental Protection Agency, Research Triangle Park, North Carolina 27711, telephone number: (919) 541-0837, facsimile: (919) 541-0942, electronic mail address: markwordt.david@epa.gov.

SUPPLEMENTARY INFORMATION: *Regulated entities.* Entities that will potentially be affected by these corrections are those that produce acetal resins, acrylic and modacrylic fiber, hydrogen fluoride, and polycarbonate and are major sources of hazardous air pollutants as defined in section 112 of the Clean Air Act (Act). The regulated categories and entities include the following:

Category	Regulated entities [a]
Industry	Producers of homopolymers and/or copolymers of alternating oxymethylene units.
	Producers of either acrylic fiber or modacrylic fiber synthetics composed of acrylonitrile (AN) units.
	Producers of, and recoverers of HF by reacting calcium fluoride with sulfuric acid. For the purpose of implementing the rule, HF production is not a process that produces gaseous HF for direct reaction with hydrated aluminum to form aluminum fluoride (i.e., the HF is not recovered as an intermediate or final product prior to reacting with the hydrated aluminum).
	Producers of polycarbonate.

[a] This table is not intended to be exhaustive, but rather provides a guide for readers regarding entities likely to be regulated by this action. This table lists the types of entities that we are now aware could potentially be regulated by this action. Other types of entities not listed in the table could also be regulated. To determine whether your facility, company, business, organization, etc., is regulated by this action, you should carefully examine the applicability criteria in § 63.1104(a)(1), (b)(1), (c)(1), and (d)(1) of the rule. If you have questions regarding the applicability of this action to a particular entity, consult the person listed in the preceding **FOR FURTHER INFORMATION CONTACT** section.

I. What Is the Background for the Corrections?

On June 29, 1999 (64 FR 34854), we published the National Emission Standards for Hazardous Air Pollutants: Generic MACT final rule which promulgated standards for four major HAP source categories (i.e., acetal resins production, acrylic and modacrylic fiber production, hydrogen fluoride production, and polycarbonate production). The proposal for the Generic MACT rule was published on October 14, 1998 (63 FR 55178), and given the size of the proposed rule, we allowed for a 90-day public comment period even though we were under a May 15, 1999 court ordered deadline for the Administrator's signature of the final rule. Because of the short time period between proposal and promulgation and the many changes made to the proposal package, some inadvertent errors were made. Today's action consists of editorial, cross-reference, and clarifying corrections to the promulgated Generic MACT rule published on June 29, 1999 (64 FR 34854). These corrections will become effective immediately (without further rulemaking action) on November 22, 1999. We have determined that it is unnecessary to provide prior notice and opportunity to comment on these corrections. In one case, we determined an opportunity for public comment is warranted; we are proposing amendments to address this case in a separate notice.

Today's action corrects typographical, grammatical, and cross-reference errors. For example, as promulgated, § 63.998(a)(1)(iii)(A) incorrectly referred the reader to § 63.999(c)(8) for the requirement for an owner or operator to report times and duration of all periods during which the flare or all the pilot flames are absent. The correct citation for this requirement is § 63.999(c)(3) and today's action makes the necessary changes to reflect the accurate citation. For another example, § 63.1012(f) incorrectly includes a citation with two repetitive paragraph designations (*i.e.*, § 63.1003(e)(e)). Today's action corrects that error by removing one of those paragraph designations (*i.e.*, § 63.1003(e)).

One of the corrections is in wording. We made an error in Table 2 to § 63.1103(b)(3)(i), item 4, that could result in control applicability errors. At promulgation, Table 2 to § 63.1103(b)(3)(i), item 4, erroneously required that an owner or operator of a new or modified source that met specified criteria would be subject to new source requirements. We should have specified that an owner or operator of a new or reconstructed source, not modified source, that met specified criteria would be subject to new source requirements. We have corrected this error by replacing the word "modified" with "reconstructed."

II. What Are the Impacts Associated With the Corrections?

This action consists of corrections and clarifications of our intent at the time of

(A) The characteristics of the stream being received shall be determined at the inlet to the tank.

(B) The characteristics shall be determined according to the procedures in § 63.144(b) and (c).

(5) When terms used in Table 35 of subpart G of this part are defined in § 63.1101, the definition in § 63.1101 shall apply, for the purpose of this subpart. For terms used in Table 35 of subpart G of this part that are not defined in § 63.1101, the definitions in § 63.101 and § 63.111 shall apply.

(6) When Table 35 of subpart G of this part refers to 40 CFR 63.119(e)(1) or (e)(2) in the requirements for tanks, the requirements in § 63.982(a)(1) shall apply, for purposes of this subpart.

(d) The compliance date for the affected sources subject to the provisions of this section is specified in § 63.1102.

[FR Doc. 99–30230 Filed 11–19–99; 8:45 am]

BILLING CODE 6560–50–P

ENVIRONMENTAL PROTECTION AGENCY

40 CFR Part 63

[AD–FRL–6478–8]

RIN 2060–AG91

National Emission Standards for Hazardous Air Pollutants: Generic Maximum Achievable Control Technology (Generic MACT)

AGENCY: Environmental Protection Agency (EPA).

ACTION: Final rule; corrections.

SUMMARY: On June 29, 1999, we issued the National Emission Standards for Hazardous Air Pollutants: Generic Maximum Achievable Control Technology (Generic MACT) (64 FR 34854). This final rule corrections serve to clarify and correct errors in the promulgated rule.

EFFECTIVE DATE: November 22, 1999.

FOR FURTHER INFORMATION CONTACT: For information concerning these corrections amendments, contact David W. Markwordt, Policy, Planning, and Standards Group, Emission Standards Division (MD–13), U.S. Environmental Protection Agency, Research Triangle Park, North Carolina 27711, telephone number: (919) 541–0837, facsimile: (919) 541–0942, electronic mail address: markwordt.david@epa.gov.

SUPPLEMENTARY INFORMATION: *Regulated entities.* Entities that will potentially be affected by these corrections are those that produce acetal resins, acrylic and modacrylic fiber, hydrogen fluoride, and polycarbonate and are major sources of hazardous air pollutants as defined in section 112 of the Clean Air Act (Act). The regulated categories and entities include the following:

Category	Regulated entities [a]
Industry	Producers of homopolymers and/or copolymers of alternating oxymethylene units.
	Producers of either acrylic fiber or modacrylic fiber synthetics composed of acrylonitrile (AN) units.
	Producers of, and recoverers of HF by reacting calcium fluoride with sulfuric acid. For the purpose of implementing the rule, HF production is not a process that produces gaseous HF for direct reaction with hydrated aluminum to form aluminum fluoride (i.e., the HF is not recovered as an intermediate or final product prior to reacting with the hydrated aluminum).
	Producers of polycarbonate.

[a] This table is not intended to be exhaustive, but rather provides a guide for readers regarding entities likely to be regulated by this action. This table lists the types of entities that we are now aware could potentially be regulated by this action. Other types of entities not listed in the table could also be regulated. To determine whether your facility, company, business, organization, etc., is regulated by this action, you should carefully examine the applicability criteria in § 63.1104(a)(1), (b)(1), (c)(1), and (d)(1) of the rule. If you have questions regarding the applicability of this action to a particular entity, consult the person listed in the preceding **FOR FURTHER INFORMATION CONTACT** section.

I. What Is the Background for the Corrections?

On June 29, 1999 (64 FR 34854), we published the National Emission Standards for Hazardous Air Pollutants: Generic MACT final rule which promulgated standards for four major HAP source categories (i.e., acetal resins production, acrylic and modacrylic fiber production, hydrogen fluoride production, and polycarbonate production). The proposal for the Generic MACT rule was published on October 14, 1998 (63 FR 55178), and given the size of the proposed rule, we allowed for a 90-day public comment period even though we were under a May 15, 1999 court ordered deadline for the Administrator's signature of the final rule. Because of the short time period between proposal and promulgation and the many changes made to the proposal package, some inadvertent errors were made. Today's action consists of editorial, cross-reference, and clarifying corrections to the promulgated Generic MACT rule published on June 29, 1999 (64 FR 34854). These corrections will become effective immediately (without further rulemaking action) on November 22, 1999. We have determined that it is unnecessary to provide prior notice and opportunity to comment on these corrections. In one case, we determined an opportunity for public comment is warranted; we are proposing amendments to address this case in a separate notice.

Today's action corrects typographical, grammatical, and cross-reference errors. For example, as promulgated, § 63.998(a)(1)(iii)(A) incorrectly referred the reader to § 63.999(c)(8) for the requirement for an owner or operator to report times and duration of all periods during which the flare or all the pilot flames are absent. The correct citation for this requirement is § 63.999(c)(3) and today's action makes the necessary changes to reflect the accurate citation. For another example, § 63.1012(f) incorrectly includes a citation with two repetitive paragraph designations (*i.e.*, § 63.1003(e)(e)). Today's action corrects that error by removing one of those paragraph designations (*i.e.*, § 63.1003(e)).

One of the corrections is in wording. We made an error in Table 2 to § 63.1103(b)(3)(i), item 4, that could result in control applicability errors. At promulgation, Table 2 to § 63.1103(b)(3)(i), item 4, erroneously required that an owner or operator of a new or modified source that met specified criteria would be subject to new source requirements. We should have specified that an owner or operator of a new or reconstructed source, not modified source, that met specified criteria would be subject to new source requirements. We have corrected this error by replacing the word "modified" with "reconstructed."

II. What Are the Impacts Associated With the Corrections?

This action consists of corrections and clarifications of our intent at the time of

promulgation of 40 CFR part 63, subparts SS, TT, UU, WW, and YY, and will not affect the estimated emissions reduction or the control costs for the standards promulgated for AR, AMF, HF, and PC production source categories on June 29, 1999 (64 FR 34854). These clarifications and corrections should make it easier for owners and operators of affected sources, and for local and State authorities, to understand and implement the requirements found in these subparts.

III. Administrative Requirements

A. Paperwork Reduction Act

The information collection requirements in this rule were submitted for approval to the Office of Management and Budget (OMB) under the *Paperwork Reduction Act*, 44 U.S.C. 3501, *et seq.* We submitted an Information Collection Request (ICR) document (ICR No. 1871.02) and a copy may be obtained from Sandy Farmer, OPPE Regulatory Information Division, U.S. Environmental Protection Agency (2137), 401 M Street, SW, Washington, DC 20460 or by calling (202) 260–2740. We may not conduct or sponsor, and a person is not required to respond to a collection of information unless it displays a currently valid OMB control number. The OMB approved the information collection requirements under the Generic MACT rule for the AR, AMF, HF, and PC production source categories and assigned the OMB control number 2060–0420 to the ICR. This approval expires September 30, 2002.

These corrections will not impact the information collection estimates made previously for the Generic MACT consolidated rulemaking package. Therefore, the ICR has not been revised.

B. Executive Order 12866

Under Executive Order 12866 (58 FR 51735, October 4, 1993), we must determine whether the regulatory action is "significant" and therefore subject to review by OMB and the requirements of the Executive Order. The Order defines "significant regulatory action" as one that is likely to result in a rule that may:

(1) Have an annual effect on the economy of $100 million or more, or adversely affect in a material way the economy, a sector of the economy, productivity, competition, jobs, the environment, public health or safety, or State, local, or tribal governments or communities;

(2) Create a serious inconsistency or otherwise interfere with an action taken or planned by another agency;

(3) Materially alter the budgetary impact of entitlements, grants, user fees, or loan programs or the rights and obligations of recipients thereof; or

(4) Raise novel legal or policy issues arising out of legal mandates, the President's priorities, or the principles set forth in the Executive Order.

Pursuant to the terms of Executive Order 12866, we have determined that these correcting amendments do not qualify as a "significant regulatory action" and, therefore, are not subject to review by OMB.

C. Executive Order 13132 (Federalism)

Executive Order 13132, entitled "Federalism" (64 FR 43255, August 10, 1999), requires EPA to develop an accountable process to ensure "meaningful and timely input by State and local officials in the development of regulatory policies that have federalism implications." "Policies that have federalism implications" is defined in the Executive Order to include regulations that have "substantial direct effects on the States, on the relationship between the national government and the States, or on the distribution of power and responsibilities among the various levels of government." Under Executive Order 13132, EPA may not issue a regulation that has federalism implications, that imposes substantial direct compliance costs, and that is not required by statute, unless the Federal government provides the funds necessary to pay the direct compliance costs incurred by State and local governments, or EPA consults with State and local officials early in the process of developing the proposed regulation. EPA also may not issue a regulation that has federalism implications and that preempts State law unless the Agency consults with State and local officials early in the process of developing the proposed regulation.

If EPA complies by consulting, Executive Order 13132 requires EPA to provide to the Office of Management and Budget (OMB), in a separately identified section of the preamble to the rule, a federalism summary impact statement (FSIS). The FSIS must include a description of the extent of EPA's prior consultation with State and local officials, a summary of the nature of their concerns and the agency's position supporting the need to issue the regulation, and a statement of the extent to which the concerns of State and local officials have been met. Also, when EPA transmits a draft final rule with federalism implications to OMB for review pursuant to Executive Order 12866, EPA must include a certification from the agency's Federalism Official stating that EPA has met the requirements of Executive Order 13132 in a meaningful and timely manner.

This final rule will not have substantial direct effects on the States, on the relationship between the national government and the States, or on the distribution of power and responsibilities among the various levels of government, as specified in Executive Order 13132. This rule has minimal direct affects on the 10 plants which are impacted by this rule. This rule has even less impacts on States within which the plants reside. Thus, the requirements of section 6 of the Executive Order do not apply to this rule.

D. Regulatory Flexibility Act/Small Business Regulatory Enforcement Fairness Act of 1996

The Regulatory Flexibility Act (RFA) of 1980 (5 U.S.C. 601, *et seq.*), as amended by the Small Business Regulatory Enforcement Fairness Act of 1996 (SBREFA), requires the EPA to give special consideration to the effect of Federal regulations on small entities and to consider regulatory options that might mitigate any such impacts. Small entities include small businesses, small not-for-profit enterprises, and small governmental jurisdictions.

Today's corrections will not have a significant impact on a substantial number of small entities because they clarify and make corrections to the promulgated 40 CFR part 63, subparts SS, TT, UU, WW and YY, and do not impose any additional regulatory requirements on owners or operators of affected sources regulated by standards promulgated on June 29, 1999 (64 FR 34854).

E. Unfunded Mandates Reform Act

Under section 202 of the Unfunded Mandates Reform Act (UMRA) of 1995, Pub. L. 104–4, we must prepare a budgetary impact statement to accompany any proposed or final rule that includes a Federal mandate that may result in estimated costs to State, local or tribal governments, in the aggregate, or to the private sector, of $100 million or more in any 1 year. Section 203 requires us to establish a plan for obtaining input from and informing, educating, and advising any small governments that may be significantly or uniquely affected by the rule.

Under section 205 of UMRA, we must identify and consider a reasonable number of regulatory alternatives before promulgating a rule for which a budgetary impact statement must be

prepared. The Agency must select the least burdensome alternative from those alternatives for State, local, and tribal governments and the private sector that achieves the objectives of the rule, unless the Agency explains why this alternative is not selected or unless the selection of this alternative is inconsistent with law.

Because these corrections do not include a Federal mandate that may result in expenditures of $100 million or more for State, local, and tribal governments, in the aggregate, or the private sector in any 1 year, we have not prepared a budgetary impact statement or specifically addressed the selection of the least costly, most cost-effective, or least burdensome alternative. In addition, because small governments will not be significantly or uniquely affected by these correcting amendments, we are not required to develop a plan with regard to small governments. Therefore, the requirements of UMRA do not apply to this action.

G. Congressional Review Act

The Congressional Review Act, 5 U.S.C. 801, *et seq.*, as added by the SBREFA of 1996, provides that before a rule may take effect, the agency promulgating the rule must submit a rule report, which includes a copy of the corrections, to each House of the Congress and to the Comptroller General of the United States. Therefore, we will submit a report containing these corrections and other required information to the United States Senate, the United States House of Representatives, and the Comptroller General of the United States prior to publication in the **Federal Register**. A major rule cannot take effect until 60 days after it is published in the **Federal Register**. This action does not constitute a "major rule" as defined by 5 U.S.C. 804(2).

H. National Technology Transfer and Advancement Act

Under section 12(d) of the National Technology Transfer and Advancement Act of 1995 (NTTAA), Pub. L. 104–113, section 12(d) (15 U.S.C. 272 note), we are directed to use voluntary consensus standards instead of government-unique standards in its regulatory activities unless to do so would be inconsistent with applicable law or otherwise impractical. By doing so, the Act is intended to reduce the cost to the private and public sectors.

Voluntary consensus standards are technical standards (e.g., materials specifications, test methods, sampling procedures, etc.) that are developed or adopted by one or more voluntary consensus standards bodies. Examples of organizations generally regarded as voluntary consensus standards bodies include the American Society for Testing and Materials (ASTM), International Organization for Standardization (IOS), International Electrotechnical Commission (IEC), American Petroleum Institute (API), National Fire Protection Association (NFPA), and the Society of Automotive Engineers (SAE). The NTTAA requires that we provide Congress, through OMB, explanations when we decide not to use available and applicable voluntary consensus standards.

As part of a larger effort, we are undertaking a project to cross-reference existing voluntary consensus standards in testing, sampling, and analysis, with current and future EPA test methods. When completed, this project will assist us in identifying potentially applicable voluntary consensus standards that can then be evaluated for equivalency and applicability in determining compliance with future regulations.

This action does not require the use of any new technical standards, therefore section 12(d) does not apply.

I. Executive Order 13045

Executive Order 13045, entitled Protection of Children from Environmental Health Risks and Safety Risks (62 FR 19885, April 23, 1997), applies to any rule that we determine (1) is economically significant as defined under Executive Order 12866, and (2) the environmental health or safety risk addressed by the rule has a disproportionate effect on children. If the regulatory action meets both criteria, we must evaluate the environmental health or safety effects of the planned rule on children and explain why the planned regulation is preferable to other potentially effective and reasonably feasible alternatives considered by us.

These corrections are not subject to Executive Order 13045 because they do not constitute an economically significant regulatory action as defined by Executive Order 12866 and because they do not establish an environmental standard intended to mitigate health or safety risks.

J. Executive Order 13084

Under Executive Order 13084, we may not issue a regulation that is not required by statute, that significantly or uniquely affects the communities of Indian tribal governments, and that imposes substantial direct compliance costs on those communities, unless the Federal Government provides the funds necessary to pay the direct compliance cost incurred by the tribal governments, or we consult with those governments. Under Executive Order 13084, if we comply by consulting, we are required to provide to OMB, in a separately identified section of the preamble to the rule, a description of the extent of our prior consultation with representatives of affected tribal governments, a summary of the nature of their concerns, and a statement supporting the need to issue the regulation. In addition, we are required to develop an effective process permitting elected officials and other representatives of Indian tribal governments "to provide meaningful and timely input in the development of regulatory policies on matters that significantly or uniquely affect their communities."

Today's corrections do not impose any duties or compliance costs on Indian tribal governments. Further, the corrections provided herein do not significantly alter the control standards imposed by subparts SS, TT, UU, WW, and YY, including any that may affect communities of Indian tribal governments. Hence, today's action does not significantly or uniquely affect the communities of Indian tribal governments. Accordingly, the requirements of section 3(b) of Executive Order 13084 do not apply to this action.

List of Subjects for 40 CFR Part 63

Acetal resins production, Acrylic and modacrylic fiber production, Air emissions control, Equipment leaks, Hazardous air pollutants, Hydrogen fluoride production, Polycarbonate production, Process vents, Reporting and recordkeeping requirements, Storage vessels.

Dated: November 15, 1999.

Carol M. Browner,

Administrator.

For the reasons set out in the preamble, title 40, chapter I, part 63 of the Code of Federal Regulations is amended as follows:

PART 63—NATIONAL EMISSION STANDARDS FOR HAZARDOUS AIR POLLUTANTS FOR SOURCE CATEGORIES

1. The authority citation for part 63 continues to read as follows:

Authority: 42 U.S.C. 7401 *et seq.*

2. Section 63.981 is amended by adding in alphabetical order a definition for *recovery operations equipment* as follows:

§ 63.981 Definitions.

* * * * *

Recovery operations equipment means the equipment used to separate the components of process streams. Recovery operations equipment includes distillation units, condensers, etc. Equipment used for wastewater treatment shall not be considered recovery operations equipment.

* * * * *

3. Section 63.982 is amended by revising paragraph (f)(1) as follows:

§ 63.982 Requirements.

* * * * *

(f) * * *

(1) Comply with the applicable requirements of this subpart for each kind of emissions in the stream (e.g., the requirements of paragraph (a)(2) of this section for process vents, and the requirements of paragraph (a)(3) of this section for transfer racks); or

* * * * *

4. Section 63.983 is amended by revising paragraph (b)(1)(i)(B) as follows:

§ 63.983 Closed vent systems.

* * * * *

(b) * * *

(1) * * *

(i) * * *

(B) Conduct annual inspections for visible, audible, or olfactory indications of leaks.

* * * * *

5. Section 63.987 is amended by revising the last sentence of paragraph (c) as follows:

§ 63.987 Flare requirements.

* * * * *

(c) * * * Flare flame monitoring and compliance records shall be kept as specified in § 63.998(a)(1) and reported as specified in § 63.999(a).

6. Section 63.998 is amended by revising the last sentence of paragraph (a)(1)(iii)(A), revising the first sentence of paragraph (a)(2)(ii)(A), and revising paragraph (a)(2)(ii)(B)(6) as follows:

§ 63.998 Recordkeeping requirements.

(a) * * *

(1) * * *

(iii) * * *

(A) * * * This record shall be submitted in the periodic reports as specified in § 63.999(c)(3).

* * * * *

(2) * * *

(ii) * * *

(A) *General requirements.* Each owner or operator subject to the provisions of this subpart shall keep up-to-date, readily accessible continuous records of the data specified in paragraphs (a)(2)(ii)(B) through (C) of this section, as applicable, measured during each performance test performed pursuant to § 63.988(b), § 63.990(b), § 63.994(b), or § 63.995(b), and also include that data in the Notification of Compliance Status required under § 63.999(b). * * *

(B) * * *

(6) For a boiler or process heater with a design heat input capacity of less than 44 megawatts and where the process vent stream is introduced with combustion air or used as a secondary fuel and is not mixed with the primary fuel, record the percent reduction of organic regulated material or TOC, or the concentration of regulated material or TOC (parts per million by volume, by compound) determined as specified in § 63.997(e)(2)(iii) at the outlet of the combustion device.

* * * * *

7. Section 63.999 is amended by revising the last sentence of paragraph (c)(6)(i), and revising the first sentence of paragraph (c)(6)(iv) as follows:

§ 63.999 Notifications and other reports.

* * * * *

(c) * * *

(6) * * *

(i) * * * If the owner or operator elects not to retain the daily average values pursuant to § 63.998(b)(5)(ii)(A), the owner or operator shall report this in the Periodic Report.

* * * * *

(iv) If the owner or operator has chosen to use the alternative recordkeeping requirements of § 63.998(b)(5), and has not notified the Administrator in the Notification of Compliance Status that the alternative recordkeeping provisions are being implemented as specified in paragraph (b)(5) of this section, the owner or operator shall notify the Administrator in the Periodic Report submitted immediately preceding implementation of the alternative. * * *

* * * * *

8. Section 63.1000 is amended by revising paragraph (c)(2) as follows:

§ 63.1000 Applicability.

* * * * *

(c) * * *

(2) *Equipment in service less than 300 hours per calendar year.* Equipment that is in regulated material service less than 300 hours per calendar year is excluded from the requirements of §§ 63.1006 through 63.1015 if it is identified as required in § 63.1003(b)(5).

* * * * *

9. Section 63.1001 is amended by revising the definitions for *connector* and *first attempt at repair* as follows:

§ 63.1001 Definitions.

* * * * *

Connector means flanged, screwed, or other joined fittings used to connect two pipelines or a pipeline and a piece of equipment. A common connector is a flange. Joined fittings welded completely around the circumference of the interface are not considered connectors for the purpose of this regulation. For the purpose of reporting and recordkeeping, connector means joined fittings that are not inaccessible, ceramic, or ceramic-lined (e.g., porcelain, glass, or glass-lined) as described in § 63.1008(d)(2).

* * * * *

First attempt at repair, for the purposes of this subpart, means to take action for the purpose of stopping or reducing leakage of organic material to the atmosphere, followed by monitoring as specified in § 63.1004(b) and, as applicable, in § 63.1004(c), as appropriate, to verify whether the leak is repaired, unless the owner or operator determines by other means that the leak is not repaired.

* * * * *

10. Section 63.1002 is amended by revising the section heading, revising the heading for paragraph (a), and revising paragraph (b), introductory text, as follows:

§ 63.1002 Compliance assessment.

(a) *General procedures for compliance assessment.* * * *

(b) *Alternative means of emission limitation.* The provisions of paragraph (b) of this section do not apply to the performance standards of § 63.1006(e)(4) for valves designated as having no detectable emissions, § 63.1011(b) for pressure relief devices, or § 63.1012(f) for compressors operating under the alternative compressor standard.

* * * * *

11. Section 63.1003 is amended by revising the first sentence of paragraph (c)(2), revising paragraphs (c)(5)(i) and (e)(1) as follows:

§ 63.1003 Equipment identification.

* * * * *

(c) * * *

(2) *Designation and criteria for difficult-to-monitor.* Valves meeting the provisions of § 63.1006(e)(2) may be designated difficult-to-monitor if the provisions of paragraph (c)(2)(i) of this section apply. * * *

* * * * *

(5) * * *

(i) The owner or operator of equipment designated as unsafe-to-monitor except connectors meeting the provisions of § 63.1008(d)(1) according to the provisions of paragraph (c)(1) of this section shall have a written plan

that requires monitoring of the equipment as frequently as practical during safe-to-monitor times, but not more frequently than the periodic monitoring schedule otherwise applicable, and repair of the equipment according to the procedures in § 63.1005 if a leak is detected.

* * * * *

(e) * * *

(1) *Designation and criteria.* Equipment may be designated as having no detectable emissions if it has no external actuating mechanism in contact with the process fluid and is operated with emissions less than 500 parts per million above background as determined by the method specified in § 63.1004(b) and (c).

* * * * *

12. Section 63.1004 is amended by revising the second sentence of paragraph (c), introductory text, and paragraph (c)(1) as follows:

§ 63.1004 Instrument and sensory monitoring for leaks.

* * * * *

(c) * * * If an owner or operator elects not to adjust instrument readings for background, the owner or operator shall monitor the equipment according to the procedures specified in paragraphs (b)(1) through (b)(5) of this section. * * *

(1) The requirements of paragraphs (b)(1) through (b)(5) of this section shall apply.

* * * * *

13. Section 63.1005 is amended by revising paragraph (d) as follows:

§ 63.1005 Leak repair.

* * * * *

(d) *Unsafe-to-repair connectors.* Any connector that is designated, as described in § 63.1003(d), as an unsafe-to-repair connector is exempt from the requirements of § 63.1008(c), and paragraph (a) of this section.

* * * * *

14. Section 63.1012 is amended by revising the first sentence of paragraph (f)(1) as follows:

§ 63.1012 Compressor standards.

* * * * *

(f) * * *

(1) Any compressor that is designated as described in § 63.1003(e) as operating with no detectable emissions shall operate at all times with an instrument reading of less than 500 parts per million. * * *

* * * * *

15. Section 63.1026 is amended by revising paragraph (e)(6) as follows:

§ 63.1026 Pumps in light liquid service standards.

* * * * *

(e) * * *

(6) *Unsafe-to-monitor pumps.* Any pump that is designated, as described in § 63.1022(c)(1), as an unsafe-to-monitor pump is exempt from the requirements of paragraph (b) of this section, the monitoring and inspection requirements of paragraphs (e)(1)(v) through (viii) of this section, and the owner or operator shall monitor and inspect the pump according to the written plan specified in § 63.1022(c)(4).

16. Section 63.1029 is amended by revising the first sentence of paragraph (b)(1) as follows:

§ 63.1029 Pumps, valves, connectors, and agitators in heavy liquid service; pressure relief devices in liquid service, and instrumentation systems standards.

* * * * *

(b) * * *

(1) *Monitoring method.* Unless otherwise specified in § 63.1021(b), § 63.1036, or § 63.1037, the owner or operator shall comply with paragraphs (b)(1) and (b)(2) of this section. * * *

* * * * *

17. Section 63.1100 is amended by revising the first sentence of paragraph (d)(4), introductory text, and revising paragraph (d)(4)(ii), introductory test, as follows:

§ 63.1100 Applicability.

* * * * *

(d) * * *

(4) The determination of the primary product for a process unit, including the assessment of applicability of this subpart to process units that are designed and operated as flexible operation units, shall be reported in the Notification of Compliance Status report required by § 63.1110(a)(4) when the primary product is determined to be a product produced by a source category subject to requirements under this subpart. * * *

(ii) If the process unit is designed and operated as a flexible operation unit, the information specified in paragraphs (d)(4)(ii)(A) and (B) of this section, as appropriate.

* * * * *

18. Section 63.1101 is amended by revising the definition for *total resource effectiveness index value* as follows:

§ 63.1101 Definitions.

* * * * *

Total resource effectiveness index value or *TRE index value* means a measure of the supplemental total resource requirement per unit reduction of organic HAP associated with a process vent stream, based on vent stream flow rate, emission rate of organic HAP, net heating value, and corrosion properties (whether or not the vent stream contains halogenated compounds), as quantified by the equations given under § 63.1104(j).

* * * * *

19. Section 63.1103 is amended by revising entry 4 of table 2 of paragraph (b)(3)(i), revising entry 6 of table 5 of paragraph (d)(3), and revising table 6 of paragraph (d)(3) as follows:

§ 63.1103 Source category-specific applicability, definitions, and requirements.

* * * * *

(b) * * *

(3) * * *

(i) * * *

* * * * *

TABLE 2. TO § 63.1103(b)(3)(i).—WHAT ARE MY REQUIREMENTS IF I OWN OR OPERATE AN ACRYLIC AND MODACRYLIC FIBER PRODUCTION EXISTING OR NEW AFFECTED SOURCE AND AM COMPLYING WITH PARAGRAPH (b)(3)(i) OF THIS SECTION?

If you own or operate* * *	And if* * *	Then you must* * *
* *	* * *	* *
4. A fiber spinning line that is a new or reconstructed source.	The lines use a spin dope produced from either a suspension polymerization process or solution polymerization process,.	a. Reduce acrylonitrile emissions by 85 weight-percent or more. (For example, by enclosing the spinning and washing areas of the spinning line (as specified in paragraph (b)(4) of this section) and venting through a closed vent system and using any combination of control devices meeting the requirements of subpart SS, as specified in § 63.982(a), of this part); or b. Reduce acrylonitrile emissions from the spinning line to less than or equal to 0.25 kilograms of acrylonitrile per megagram (0.5 pounds of acrylonitrile per ton) of acrylic and modacrylic fiber produced; or c. Reduce the AN concentration of the spin dope to less than 100 ppmw.
* *	* * *	* *

(d) * * * (3) * * *

Table 5.—To § 63.1103(d)—What Are My Requirements If I Own or Operate a Polycarbonate Production Existing Affected Source?

If you own or operate. . .	And if. . .	Then you must. . .
* *	* * *	* *
6. Equipment as defined under § 63.1101	The equipment contains or contacts weight-percent total organic HAPe, and operates ≤ 300 hours per year.	Comply with the requirements of subpart TT (national emission standards for equipment leaks (control level 1)) or subpart UU (national emission standards for equipment leaks (control level 2)) of this part.

* * * * *

TABLE 6.—TO § 63.1103(d)—WHAT ARE MY REQUIREMENTS IF I OWN OR OPERATE A POLYCARBONATE PRODUCTION NEW AFFECTED SOURCE?

If you own or operate. . .	And if. . .	Then you must. . .
1. A storage vessel with: 38 cubic meters ≤capacity <151 cubic meters.	13.1 kilopascals ≤maximum true vapor pressure of total organic HAP <76.6 kilopascals.	a. Reduce emissions of total organic HAP by 95 weight-percent by venting emissions through a closed vent system to any combination of control devices meeting the requirements of subpart SS (national emission standards for closed vent systems, control devices, recovery devices, and routing to a fuel gas system or a process), as specified in § 63.982(a)(1) (storage vessel requirements) of this part; or b. Comply with the requirements of subpart WW (national emission standards for storage vessels (control level 2)) of this part.
2. A storage vessel with: 151 cubic meters ≤capacity.	The maximum true vapor pressure of total organic HAP is ≥5.2 kilopascals.	Reduce emissions of total organic HAP by 98 weight-percent by venting emissions through a closed vent system to any combination of control devices meeting the requirements of subpart SS, as specified in § 63.982(a)(1) (storage vessel requirements) of this part.

TABLE 6.—TO § 63.1103(d)—WHAT ARE MY REQUIREMENTS IF I OWN OR OPERATE A POLYCARBONATE PRODUCTION NEW AFFECTED SOURCE?—Continued

If you own or operate. . .	And if. . .	Then you must. . .
3. A storage vessel with: 38 cubic meters ≤capacity <151 cubic meters.	The maximum true vapor pressure of total organic HAP is ≥76.6 kilopascals.	Reduce emissions of total organic HAP by 95 weight-percent by venting emissions through a closed vent system to any combination of control devices meeting the requirements of subpart SS, as specified in § 63.982(a)(1) (storage vessel requirements) of this part.
4. A process vent from continuous unit operations or a combined vent stream[a].	The vent stream has a a TRE[b,c] ≤9.6	a. Reduce emissions of total organic HAP by 98 weight-percent; or reduce total organic HAP to a concentration of 20 parts per million by volume; whichever is less stringent, by venting emissions through a closed vent system to any combination of control devices meeting the requirements of subpart SS, as specified in § 63.982(a)(2) (process vent requirements) of this part; and Vent emissions through a closed vent system to a halogen reduction device meeting the requirements of subpart SS, § 63.994, of this part that reduces hydrogen halides and halogens by 99 weight-percent or to less than 0.45 kilograms per hourd, whichever is less stringent; or b. Reduce the process vent halogen atom mass emission rate to less than 0.45 kilograms per hour by venting emissions through a closed vent system to a halogen reduction device meeting the requirements of subpart SS, § 63.994 (halogen reduction device requirements) of this part; and Reduce emissions of total organic HAP by 98 weight-percent; or reduce total organic HAP or TOC to a concentration of 20 parts per million by volume; whichever is less stringent, by venting emissions through a closed vent system to any combination of control devices meeting the requirements of subpart SS, as specified in § 63.982(a)(2) (process vent requirements) of this part; or c. Achieve and maintain a TRE index value greater than 9.6
5. Equipment as defined under § 63.1101	The equipment contains or contacts ≥ 5 weight-percent organic HAPe, and operates ≥ 300 hours per year.	Comply with the requirements of 40 CFR subpart TT (national emission standards for equipment leaks (control level 1)) or subpart UU (national emission standards for equipment leaks (control level 2)) of this part.

[a] Combined vent streams shall use the applicability determination procedures and methods for process vents from continuous unit operations (§ 63.1104).

[b] The TRE equation coefficients for halogenated streams (table 7 of this subpart) shall be used to calculate the TRE index value.

[c] The TRE is determined according to the procedures specified in § 63.1104(j). If a dryer is manifolded with such vents, and the vent is routed to a recovery, recapture, or combustion device, then the TRE index value for the vent must be calculated based on the properties of the vent stream (including the contributions of the dryer). If a dryer is manifolded with other vents and not routed to a recovery, recapture, or combustion device, then the TRE index value must be calculated excluding the contributions of the dryer. The TRE index value for the dryer must be calculated separately in this case.

[d] The mass emission rate of halogen atoms contained in organic compounds is determined according to the procedures specified in § 63.1104(i).

[e] The weight-percent organic HAP is determined for equipment according to procedures specified in § 63.1107.

20. Section 63.1104 is amended by revising paragraphs (f) introductory text, and (j)(1) as follows:

§ 63.1104 Process vents from continuous unit operations: applicability assessment procedures and methods.

* * * * *

(f) *Volumetric flow rate.* The process vent volumetric flow rate (Q_S), in standard cubic meters per minute at 20 °C, shall be determined as specified in paragraph (f)(1) or (2) of this section and shall be recorded as specified in § 63.1109(d).

* * * * *

(j) * * *

(1) *TRE index value equation.* The equation for calculating the TRE index value is Equation 5:

$$TRE = 1/E_{HAP} * [A + B(Q_S) + C(H_T) + D(E_{TOC})] \quad [Eq. 5]$$

Where:

TRE = TRE index value.

A, B, C, D = Coefficients presented in table 1 of this section.

E_{HAP} = Emission rate of total organic HAP, kilograms per hour, as calculated according to paragraph (h) or (k) of this section.

Q_S = process vent flow rate, standard cubic meters per minute, at a standard temperature of 20 °C, as calculated according to paragraph (f) or (k) of this section.

H_T = process vent net heating value, megaJoules per standard cubic meter, as calculated according to paragraph (g) or (k) of this section.

E_{TOC} = Emission rate of TOC (minus methane and ethane), kilograms per hour, as calculated according to paragraph (h) or (k) of this section.

* * * * *

21. Section 63.1108 is amended by revising the second sentence of paragraph (b)(1), and by revising the first sentence of paragraph (b)(2) as follows:

§ 63.1108 Compliance with standards and operation and maintenance requirements.

* * * * *

(b) * * *

(1) * * * For each excursion except for excused excursions (as described in § 63.998(b)(6)(ii)), and as provided for in paragraph (b)(2) of this section the owner or operator shall be deemed to have failed to have applied the control in a manner that achieves the required operating conditions.

(2) *Parameter monitoring: Excursions.* An excursion is not a violation in cases where continuous monitoring is required and the excursion does not count toward the number of excused excursions (as described in § 63.998(b)(6)(ii)), if the conditions of paragraph (b)(2)(i) or (ii) of this section are met. * * *

* * * * *

22. Section 63.1110 is amended by revising paragraph (e)(2) as follows:

§ 63.1110 Reporting requirments.

* * * * *

(e) * * *

(2) *Due date.* The Periodic Report shall be submitted no later than 60 days after the end of each 6-month period. The first report shall cover the 6-month period after the Notification of Compliance Status report is due. The first report shall be submitted no later than the last day of the month that includes the date 8 months (6 months and 60 days) after the Notification of Compliance Status report is due.

* * * * *

[FR Doc. 99-30229 Filed 11-19-99; 8:45 am]

BILLING CODE 6560-50-P

40 CFR Part 180

[OPP-300948; FRL-6391-8]

RIN 2070-AB78

Avermectin B1 and its delta-8,9-isomer; Extension of Tolerance for Emergency Exemptions

AGENCY: Environmental Protection Agency (EPA).

ACTION: Final rule.

SUMMARY: This regulation extends a time-limited tolerance for the combined residues of the insecticide and miticide avermectin B_1 and its delta-8,9-isomer in or on celeriac at 0.05 part per million (ppm) for an additional 1-year period. This tolerance will expire and is revoked on December 31, 2000. This action is in response to EPA's granting of an emergency exemption under section 18 of the Federal Insecticide, Fungicide, and Rodenticide Act authorizing use of the pesticide on celeriac. Section 408(l)(6) of the Federal Food, Drug, and Cosmetic Act requires EPA to establish a time-limited tolerance or exemption from the requirement for a tolerance for pesticide chemical residues in food that will result from the use of a pesticide under an emergency exemption granted by EPA under section 18 of the Federal Insecticide, Fungicide, and Rodenticide Act.

DATES: This regulation is effective November 22, 1999. Objections and requests for hearings, identified by docket control number OPP-300948, must be received by EPA on or before January 21, 2000.

ADDRESSES: Written objections and hearing requests may be submitted by mail, in person, or by courier. Please follow the detailed instructions for each method as provided in Unit III. of the "SUPPLEMENTARY INFORMATION." To ensure proper receipt by EPA, your objections and hearing requests must identify docket control number OPP-300948 in the subject line on the first page of your response.

FOR FURTHER INFORMATION CONTACT: By mail: Dan Rosenblatt, Registration Division (7505C), Office of Pesticide Programs, Environmental Protection Agency, 401 M St., SW., Washington, DC 20460; telephone number: (703) 308-9375; and e-mail address: rosenblatt.dan@epa.gov.

SUPPLEMENTARY INFORMATION:

I. General Information

A. Does this Action Apply to Me?

You may be affected by this action if you are an agricultural producer, food manufacturer, or pesticide manufacturer. Potentially affected categories and entities may include, but are not limited to:

Categories	NAICS codes	Examples of potentially affected entities
Industry	111 112 311 32532	Crop production Animal production Food manufacturing Pesticide manufacturing

This listing is not intended to be exhaustive, but rather provides a guide for readers regarding entities likely to be affected by this action. Other types of entities not listed in the table could also be affected. The North American Industrial Classification System (NAICS) codes have been provided to assist you and others in determining whether or not this action might apply to certain entities. If you have questions regarding the applicability of this action to a particular entity, consult the person listed under "FOR FURTHER INFORMATION CONTACT."

B. How Can I Get Additional Information, Including Copies of this Document and Other Related Documents?

1. *Electronically.* You may obtain electronic copies of this document, and certain other related documents that might be available electronically, from the EPA Internet Home Page at http://www.epa.gov/. To access this document, on the Home Page select "Laws and Regulations" and then look up the entry for this document under the "**Federal Register**--Environmental Documents." You can also go directly to the **Federal Register** listings at http://www.epa.gov/fedrgstr/.

2. *In person.* The Agency has established an official record for this action under docket control number OPP-300948. The official record consists of the documents specifically referenced in this action, and other information related to this action, including any information claimed as Confidential Business Information (CBI). This official record includes the documents that are physically located in the docket, as well as the documents

final rule temporarily suspends certain regulatory requirements. Accordingly, the requirements of section 3(b) of Executive Order 13084 do not apply to this rule.

I. Congressional Review Act

Under the Small Business Regulatory Enforcement Fairness Act of 1996, we submitted a report containing these final amendments and other required information to the U.S. Senate, the U.S. House of Representatives, and the Comptroller General of the General Accounting Office prior to publication of these final amendments in the **Federal Register**. This is not a "major rule" as defined by the Small Business Regulatory Enforcement Fairness Act.

List of Subjects in 40 CFR Part 63

Environmental protection, Air pollution control, Ethylene oxide sterilization, Hazardous substances, Reporting and recordkeeping requirements.

Dated: November 29, 1999.

Carol M. Browner,

Administrator.

For the reasons set out in the preamble, title 40, chapter I, of the Code of Federal Regulations is amended as follows:

PART 63—[AMENDED]

1. The authority citation for part 63 continues to read as follows:

Authority: 42 U.S.C. 7401, *et seq.*

Subpart O—[Amended]

2. Section 63.360 is amended by revising paragraphs (g)(4), (g)(5), and (g)(6) and adding paragraphs (g)(7), (g)(8), (g)(9), and (g)(10) to read as follows:

§ 63.360 Applicability.

* * * * *

(g) * * *

(4) All aeration room vents subject to the emissions standards in § 63.362 with an initial startup date before December 6, 2000, no later than December 6, 2000.

(5) All aeration room vents subject to the emissions standards in § 63.362 with an initial startup date on or after December 6, 2000, immediately upon initial startup of the source.

(6) All aeration room vents at sources using less than 10 tons that increase their ethylene oxide usage after December 6, 2000, such that the aeration room vents become subject to the emissions standards in § 63.362, immediately upon becoming subject to the emission standards.

(7) All chamber exhaust vents subject to the emissions standards in § 63.362 with an initial startup date before December 6, 2001, no later than December 6, 2001.

(8) All chamber exhaust vents subject to the emissions standards in § 63.362 with an initial startup date on or after December 6, 2001, immediately upon initial startup of the source.

(9) All chamber exhaust vents at sources using less than 1 ton that increase their ethylene oxide usage after December 6, 2001, such that the chamber exhaust vents become subject to the emissions standards in § 63.362, immediately upon becoming subject to the emission standards.

(10) All chamber exhaust vents at sources using less than 10 tons that increase their ethylene oxide usage after December 6, 2001, such that the chamber exhaust vents become subject to the emissions standards in § 63.362(e)(1), immediately upon becoming subject to the emission standards.

* * * * *

[FR Doc. 99–31354 Filed 12–2–99; 8:45 am]

BILLING CODE 6560–50–P

ENVIRONMENTAL PROTECTION AGENCY

40 CFR Part 63

[AD–FRL–6500–1]

National Emission Standards for Hazardous Air Pollutants: Halogenated Solvent Cleaning

AGENCY: Environmental Protection Agency (EPA).

ACTION: Final rule; amendments.

SUMMARY: This action promulgates amendments to the "National Emission Standards for Hazardous Air Pollutants: Halogenated Solvent Cleaning" originally promulgated on December 2, 1994. These amendments to the rule were proposed on August 19, 1999. Today's action finalizes compliance options for continuous web cleaning machines, as well as amendments to the national emission standards for hazardous air pollutants (NESHAP) that apply to steam-heated vapor cleaning machines and to cleaning machines used to clean transformers. The EPA is finalizing these amendments to ensure that all owners or operators of solvent cleaning machines have appropriate and attainable requirements for their cleaning machines.

EFFECTIVE DATE: December 3, 1999.

ADDRESSES: Interested parties may review items used to support these final rule amendments at: Air and Radiation Docket and Information Center (6102), Attention Docket Number A–92–39, Room M–1500, U.S. Environmental Protection Agency, 401 M Street, SW, Washington, DC 20460.

FOR FURTHER INFORMATION CONTACT: For information concerning the standards, contact Mr. Paul Almodovar, Coatings and Consumer Products Group, Emission Standards Division (MD–13), U.S. Environmental Protection Agency, Research Triangle Park, North Carolina 27711, telephone number (919) 541–0283. For information regarding the applicability of this action to a particular entity, contact Ms. Acquanetta Delaney, Manufacturing Branch, Office of Compliance (2223A), U.S. Environmental Protection Agency, 401 M Street, SW, Washington, DC 20460; telephone (202) 564–7061.

SUPPLEMENTARY INFORMATION:

Docket

The docket number for this rulemaking is A–92–39. The docket is an organized file of information compiled by the EPA in the development of this rulemaking. The docket is a dynamic file because material is added throughout the rulemaking development. The docketing system is intended to allow members of the public and industries involved to readily identify and locate documents so that they can effectively participate in the rulemaking process. Along with the proposed and promulgated standards and their preambles, the docket contains the record in the case of judicial review. (See section 307(d)(7)(A) of the Clean Air Act.)

Regulated Entities

The following entities are potentially regulated by this final rule.

Category	SIC Codes	Examples of potentially regulated entities
Industry	33, 34, 36, and 37	Facilities engaging in cleaning operations using halogenated solvent cleaning machines.

This list is not intended to be exhaustive, but rather provides a guide for readers regarding entities likely to be affected by this action. This list includes the types of entities that the EPA is now aware could potentially be regulated by this action. Other types of entities not listed could also be affected. To determine whether your facility or company is regulated by this final rule, you should carefully examine the applicability criteria in § 63.460 of the promulgated rule. If you have any questions regarding the applicability of this final rule to a particular entity, consult the person listed in the preceding **FOR FURTHER INFORMATION CONTACT** section.

The information presented in this preamble is organized as follows:

I. Background
A. Why is EPA amending the NESHAP for halogenated solvent cleaning?
B. What is the purpose of these final rule amendments?
C. What changes have been made since the August 19, 1999 proposed amendments?
D. Do the changes in today's final rule amendments apply to my machines?
II. Review of Requirements for Continuous Web Cleaning Machines
A. How do I know if my machine is a continuous web cleaning machine?
B. How will these changes impact my continuous web cleaning machines?
C. How do I know if my machine is a "new" or an "existing" continuous web cleaning machine?
D. When must I comply with these new requirements?
III. Other Changes
A. What change is EPA making that applies to my transformer cleaning operations?
B. What changes impact my steam-heated vapor cleaning machines?
IV. Impacts
V. Administrative Requirements
A. Executive Order 12866: Regulatory Planning and Review
B. Executive Order 13132: Federalism
C. Executive Order 13084: Consultation and Coordination with Indian Tribal Governments
D. Unfunded Mandates Reform Act
E. Regulatory Flexibility/Small Business Regulatory Enforcement Fairness Act
F. Paperwork Reduction Act
G. Executive Order 13045: Protection of Children from Environmental Health Risks and Safety Risks
H. Congressional Review Act
I. National Technology Transfer and Advancement Act

I. Background

A. Why Is EPA Amending the NESHAP for Halogenated Solvent Cleaning?

The EPA promulgated the halogenated solvent cleaning (HSC) NESHAP on December 2, 1994, as subpart T of 40 CFR part 63 (59 FR 61801). That rule included requirements for batch and in-line cleaning machines and both control device and work practice requirements. A batch cleaning machine is defined in the HSC NESHAP as "a solvent cleaning machine in which individual parts or sets of parts move through the entire cleaning cycle before new parts are introduced." Inherent in some of the requirements is the understanding that the part or set of parts stops at one or various points in the machine for cleaning and for removal of cleaned parts. In contrast, an in-line cleaning machine (or continuous cleaning machine) is defined in the HSC NESHAP as "a solvent cleaning machine that uses an automated parts handling system, typically a conveyor, to automatically provide a continuous supply of parts to be cleaned."

After promulgation, several industry groups raised concerns about how some cleaning machines would be classified under the rule. These commenters stated that some machines did not clearly and completely fit into any of the categories of cleaning machines included in the HSC NESHAP. The machines in question included movie film cleaning machines and machines used to clean strips, rods, and wire.

After some review, the EPA concluded that these issues warranted additional consideration. On May 5, 1998 (63 FR 24768), the EPA issued an immediate stay of compliance for the continuous web cleaning machines until August 3, 1998. In that same action, the EPA proposed to extend the compliance date for these units for an additional year, to August 3, 1999, to allow for an equivalency determination. The EPA received comments on the proposed extension. One commenter expressed concern that the 1-year extension may not be sufficient time to review the data, complete the technical analysis, propose and promulgate an equivalency determination, and allow sufficient time for facilities to comply with the new requirements. The EPA recognized these concerns and on December 11, 1998 (63 FR 68397) extended the compliance date for continuous web cleaning machines to December 2, 1999.

On August 19, 1999, EPA published a direct final rule (64 FR 45187) and parallel proposal (64 FR 45221) to amend the "National Emission Standards for Hazardous Air Pollutants: Halogenated Solvent Cleaning." The proposed amendments would have provided additional compliance options for continuous web cleaning machines, as well as clarifications that apply to steam-heated vapor cleaning machines and to cleaning machines used to clean transformers.

The EPA stated in the direct final rule that if relevant, adverse comments were received by September 20, 1999, the EPA would publish a notice withdrawing the direct final rule before its effective date of October 18, 1999. The EPA received adverse comments on the direct final rule from two commenters on September 20, 1999 and, therefore, withdrew the direct final rule on October 18, 1999 (64 FR 56173). Today's final rule amendments are based on the public comments received on the proposed amendments.

B. What Is the Purpose of These Final Rule Amendments?

This final rule does two things. First, it promulgates alternative compliance requirements for continuous web cleaning machines consistent with the August 19, 1999 proposal (64 FR 45221). A continuous web cleaning machine is a cleaning machine that cleans a continuous web part at speeds typically in excess of 11 feet per minute. Changes to the rule impacting continuous web cleaning machines are discussed in section II.A of this final rule. Second, this final rule promulgates two minor changes, discussed in section III.B, that impact cleaning machines other than continuous web cleaning machines.

C. What Changes Have Been Made Since the August 19, 1999 Proposed Amendments?

The EPA has made several changes and clarifications to the amendments proposed on August 19, 1999 (64 FR 45221) in response to the public comments that were received. A full discussion of the comments and the EPA responses is included in the docket for this rulemaking. Following is a summary of the major changes that have been made to the proposed amendments.

1. Clarification of Requirements for Remote Reservoir Continuous Web Cleaning Machines

The EPA has clarified that the owner or operator of a remote reservoir continuous web cleaning machine is not required to comply with freeboard refrigerated device requirements or freeboard ratio requirements. The EPA concluded that these requirements are redundant to the emission reductions obtained from the remote reservoir design. Upon further review, the EPA concluded that a separate section devoted to remote reservoir continuous web cleaning machines was warranted to ensure the requirements applicable to these machines were clear; these requirements were added as § 63.463(h).

2. Equivalent Requirements for Complying With Downtime and Idling Mode Covers

The EPA has added equivalent requirements for covers during idling and downtime. These equivalent requirements include the ability to consider the continuous web part itself as a port cover if it fills the entry and exit port, thereby achieving the same control as a port cover. Also, a machine kept under negative pressure and vented to an appropriately maintained and operated carbon adsorption system is equivalent to maximum achievable control technology (MACT) and is now allowed under this rule.

3. Addition of an Alternative Standard for Continuous Web Cleaning Machines

The EPA has added an alternative standard for continuous web cleaning machines based on the calculation of an overall cleaning system control efficiency. This approach was recommended by a commenter and reviewed and accepted by the EPA.

4. Addition of Combined Squeegee and Air Knife System

Under the proposed amendments to the NESHAP, EPA allowed for the use of either a squeegee system or an air knife system. The EPA has clarified that a system that combines squeegees and air knives is allowed as long as the components are within a single enclosure. The visible emission test is not required until after the web part exits the combined system.

In addition to these changes, EPA wishes to clarify that there are four different compliance options that refer to carbon adsorber requirements for continuous web cleaning machines:

a. Under § 63.463(g)(1), a carbon adsorber system is allowed in the control device combinations for existing and new machines. The owners or operators of these machines must demonstrate that the exhaust concentration limit of 100 parts per million is maintained using the provisions of § 63.463(e)(2)(vii). The owners or operators must still demonstrate compliance with the work practice requirements and the basic design requirements contained in the rule.

b. Under § 63.463(g)(2), a carbon adsorption system with an overall control efficiency of 70 percent is allowed in lieu of complying with one of the control combinations cited above. The owners or operators of these machines are not required to demonstrate the 100 parts per million limit; the owners or operators must work with their regulating authority to define the appropriate monitoring parameters to demonstrate the 70 percent control. In addition, the owners or operators must demonstrate compliance with the work practice requirements and the basic design requirements contained in the rule.

c. Under § 63.463(g)(3)(vii) or § 63.463(h)(2)(v), any facility with a lip or other exhaust within a machine must ensure that the exhaust is vented to a carbon adsorber system. The carbon adsorber system can be shown to meet either the 100 parts per million exhaust limit of § 63.463(e)(2)(vii) or the 70 percent carbon adsorber system efficiency of § 63.463(g)(2).

d. Under the new alternative standard of § 63.464(d), an owner or operator may elect to use a carbon adsorber system (or any other emission control system) to demonstrate compliance with the overall solvent cleaning machine reduction efficiency of 70 percent. A facility complying with this option is not subject to the work practice or basic design requirements, which includes the squeegee and air knife requirements.

The EPA would also like to clarify that under the HSC NESHAP, emissions from multiple solvent cleaning machines are allowed to be controlled using a single carbon adsorber. In this situation, the affected source would need to develop and get approval from the regulatory authority of a procedure to apportion the solvent recovered by the carbon adsorber to each machine venting through it. A likely procedure would apportion the solvent recovered from the carbon adsorber based on the percentage of total fresh solvent added to each solvent cleaning machine.

D. Do the Changes in Today's Final Rule Amendments Apply to My Machines?

Today's final rule amendments only apply to you if your machines meet any of the following criteria:

1. Halogenated solvent cleaning machines that are classified as continuous web cleaning machines. (Changes impacting these machines are discussed in section II.B.)

2. Halogenated solvent cleaning machines that are used to clean polychlorinated biphenyl (PCB) laden transformers. (A change impacting these machines is discussed in section III.A.)

3. Halogenated solvent cleaning machines that are steam-heated vapor cleaning machines. (The definition of continuous web cleaning machines and a change impacting these machines is discussed in section II.B.)

II. Review of Requirements for Continuous Web Cleaning Machines

This section discusses changes made to the HSC NESHAP proposed amendments published on August 19, 1999 (64 FR 45221).

A. How Do I Know if My Machine Is a Continuous Web Cleaning Machine?

A continuous web cleaning machine is a solvent cleaning machine in which parts such as film, coils, wire, and metal strips are cleaned at speeds typically in excess of 11 feet per minute. Parts are generally uncoiled, cleaned such that the same part is simultaneously entering and exiting the solvent application area of the solvent cleaning machine, and then recoiled or cut. For the purposes of subpart T to 40 CFR part 63, all continuous web cleaning machines are considered to be a subset of in-line solvent cleaning machines. These units tend to be used in two distinct areas: movie film cleaning and continuous strip, wire, or rod cleaning.

Movie Film Cleaning

The movie film cleaning industry typically uses a continuous web cleaning machine to clean the surfaces on large reels of film. Typically, a reel is loaded onto the machine and the film threaded through a series of rollers. The film is then either fed into a vat or past a series of spray nozzles that apply the chlorinated solvent onto the film. The film is then dried using air jets, cloth pads, or a combination of both.

Strip, Rod, or Wire Cleaning

This group of continuous web cleaning machines cleans a more diverse product group, including large flat pieces of metal, metal rods, and thin wires. The machines can be dip tanks, spray applications, or a combination. While the EPA has currently only identified continuous web cleaning machines used to clean metal products, these machines may clean nonmetal products which would also be covered by the HSC NESHAP. The EPA considered both of the above types of continuous web cleaning machines when developing the changes discussed today.

B. How Will These Changes Impact My Continuous Web Cleaning Machines?

The changes will enable you to comply with all of the requirements of the HSC NESHAP. The options are similar to the options for other in-line cleaning machines. The final rule amendments provide for emission controls equivalent to existing requirements codified at 40 CFR part 63, subpart T, and include new equivalent

controls for certain cleaning machines and clarifications of the EPA's interpretation of existing requirements germane to continuous web cleaning machines. The changes account for the inherent differences between the solvent cleaning machines that were the basis for the HSC NESHAP promulgated in 1994 and continuous web cleaning machines. The changes to the rule that apply only to continuous web cleaning machines are:

1. An alternative to the requirement for a maximum parts speed of 11 feet per minute and the requirement for a dwell time in some options. You are not required to meet the speed and dwell time requirements if your continuous web cleaning machine meets other specific requirements. These requirements include a properly designed, operated, and maintained system to eliminate visible carry out of solvent on your continuous web product. In addition, you must comply with the monitoring, recordkeeping, and reporting requirements for the controls that replace the hoist speed and dwell requirements.

2. A change in the alternative for continuous web cleaning machines venting to a carbon adsorber. A properly designed and operated continuous web cleaning machine can comply with the new or existing source requirements by venting the exhaust from the enclosed cleaning chamber through a properly operated and maintained carbon adsorption system instead of one of the equipment combinations listed in the HSC NESHAP. However, the system used must be demonstrated to the Administrator's satisfaction to achieve an overall solvent control efficiency of 70 percent.

3. A clarification that there is no freeboard ratio requirement and freeboard refrigeration device requirement if your continuous web cleaning machine does not have an exposed sump. That is, if your continuous web cleaning machine has a remote reservoir, no freeboard ratio and freeboard refrigeration device requirements apply. Requirements for remote reservoir continuous web cleaning machines have been included in a new paragraph that has been added to § 63.463 of the rule.

4. A clarification that the ban on the cleaning of absorbent materials does not apply to cloth rollers used in the cleaning process inside your machine. However, you do have requirements that apply when you remove these rollers from the machine.

5. A clarification on the interpretation of superheated vapor technology for continuous web cleaning machines. The new interpretation allows for any technology that raises the continuous web part above the boiling point of the solvent. A new term, superheated part technology, has been added to the rule to more clearly address this situation. Therefore, as with the HSC NESHAP promulgated in 1994, your specific compliance options in the amended HSC NESHAP depend on whether your cleaning machines are considered to be new or existing.

C. How Do I Know if My Machine Is a "New" or an "Existing" Continuous Web Cleaning Machine?

Machines are classified as either new or existing based on the date of construction. Continuous web cleaning machines on which construction started before November 29, 1993, the date the HSC NESHAP was proposed, are existing affected sources. Machines upon which construction started on November 29, 1993 or later are new affected sources.

D. When Must I Comply With These New Requirements?

You must comply with these requirements by December 2, 1999 for both your new and existing affected sources. This date was established in a **Federal Register** final rule published on December 11, 1998 (63 FR 68397).

III. Other Changes

A. What Change Is EPA Making That Applies to My Transformer Cleaning Operations?

The EPA has recently become aware of a potential conflict between the HSC NESHAP and some specific Toxic Substances Control Act (TSCA) permits. Some facilities clean transformers contaminated with PCBs using batch cold halogenated solvent cleaning machines. The cleaning of these PCB-laden transformers is covered under TSCA permits, which include requirements to ensure proper draining and proper disposal of all materials. These transformers often include absorbent materials (*i.e.*, cardboard). The HSC NESHAP requirements for cold cleaning machines state that "Sponges, fabric, wood, and paper shall not be cleaned." (§ 63.462(c)(8)).

It is not EPA's intent to prohibit the proper decontamination operation for PCB-laden transformers. The intent of this requirement in the HSC NESHAP is to reduce the amount of solvent loss due to improper cleaning of absorbent materials, such as rags and cloths. The EPA has reviewed the requirements in an example permit of a facility conducting decontamination of these transformers and concluded that TSCA permits should adequately ensure that the intent of the HSC NESHAP is met for these operations. For example, these permits have sufficient requirements for proper draining and disposal of the transformers. Therefore, EPA is adding an exclusion for cleaning absorbent materials in PCB-laden transformers, in compliance with a permit issued under TSCA, in the final rule.

B. What Changes Impact My Steam-Heated Vapor Cleaning Machines?

Steam-heated vapor cleaning machines will no longer be required to have a device that shuts off the sump heat if the liquid level drops to the sump heater coils (§ 63.463(a)(4)). This requirement was included in the HSC NESHAP for all machines. However, since the promulgation of the HSC NESHAP, EPA has determined that this device is not necessary for steam-heated machines because these machines are not able to heat the solvent to a temperature above the decomposition temperatures of any of the regulated halogenated solvents.

IV. Impacts

The changes contained in these final rule amendments are corrections, clarifications, and equivalent compliance alternatives and do not change the intended coverage of the HSC NESHAP (subpart T). These changes will not affect the estimated emission reductions or the control costs for these rules. These clarifications and corrections should make it easier for owners and operators of affected sources, and for local and State authorities, to understand and implement the requirements in subpart T. The equivalent compliance alternatives will make it possible for owners and operators of continuous web cleaning machines to comply with all requirements of subpart T.

V. Administrative Requirements

A. Executive Order 12866: Regulatory Planning and Review

Under Executive Order 12866 (58 FR 51735, October 4, 1993), the EPA must submit significant regulatory actions to the Office of Management and Budget (OMB) for review. The Executive Order defines "significant regulatory action" as one that OMB determines is likely to result in a rule that may:

(1) Have an annual effect on the economy of $100 million or more or adversely affect in a material way the economy, a sector of the economy, productivity, competition, jobs, the environment, public health or safety, or

State, local, or tribal governments or communities;

(2) create a serious inconsistency or otherwise interfere with an action taken or planned by another agency;

(3) materially alter the budgetary impact of entitlements, grants, user fees, or loan programs, or the rights and obligations of recipients thereof; or

(4) raise novel legal or policy issues arising out of legal mandates, the President's priorities, or the principles set forth in the Executive Order.

It has been determined that this final rule does not qualify as a "significant regulatory action" under the terms of Executive Order 12866 and, therefore, is not subject to review by OMB.

B. Executive Order 13132: (Federalism)

Executive Order 13132, entitled Federalism (64 FR 43255, August 10, 1999), requires EPA to develop an accountable process to ensure "meaningful and timely input by State and local officials in the development of regulatory policies that have federalism implications." "Policies that have federalism implications is defined in the Executive Order to include regulations that have substantial direct effects on the States, on the relationship between the national government and the States, or on the distribution of power and responsibilities among the various levels of government." Under Executive Order 13132, EPA may not issue a regulation that has federalism implications, that imposes substantial direct compliance costs, and that is not required by statute, unless the Federal government provides the funds necessary to pay the direct compliance costs incurred by State and local governments, or EPA consults with State and local officials early in the process of developing the proposed regulation. The EPA also may not issue a regulation that has federalism implications and that preempts State law unless the Agency consults with State and local officials early in the process of developing the proposed regulation.

If EPA complies by consulting, Executive Order 13132 requires EPA to provide to OMB, in a separately identified section of the preamble to the rule, a federalism summary impact statement (FSIS). The FSIS must include a description of the extent of EPA's prior consultation with State and local officials, a summary of the nature of their concerns and the Agency's position supporting the need to issue the regulation, and a statement of the extent to which the concerns of State and local officials have been met. Also, when EPA transmits a draft final rule with federalism implications to OMB for review pursuant to Executive Order 12866, EPA must include a certification from the Agency's Federalism Official stating that EPA has met the requirements of Executive Order 13132 in a meaningful and timely manner.

This final rule will not have substantial direct effects on the States, on the relationship between the national government and the States, or on the distribution of power and responsibilities among the various levels of government, as specified in Executive Order 13132. This final rule only provides amendments to ensure that all owners or operators of solvent cleaning machines have appropriate and attainable requirements for their cleaning machines. Thus, the requirements of section 6 of the Executive Order do not apply to this rule.

C. Executive Order 13084: Consultation and Coordination With Indian Tribal Governments

Under Executive Order 13084, the EPA may not issue a regulation that is not required by statute, that significantly or uniquely affects the communities of Indian tribal governments, and that imposes substantial direct compliance costs on those communities unless the Federal government provides the funds necessary to pay the direct compliance costs incurred by the tribal governments or the EPA consults with those governments. If the EPA complies by consulting, Executive Order 13084 requires the EPA to provide to OMB, in a separately identified section of the preamble to the rule, a description of the extent of the EPA's prior consultation with representatives of affected tribal governments, a summary of the nature of their concerns, and a statement supporting the need to issue the regulation. In addition, Executive Order 13084 requires the EPA to develop an effective process permitting elected officials and other representatives of Indian tribal governments "to provide meaningful and timely input in the development of regulatory policies on matters that significantly or uniquely affect their communities."

These final rule amendments do not impose any duties or compliance costs on Indian tribal governments. Further, the final rule amendments provided herein do not significantly alter the control standards imposed by the HSC NESHAP for any source, including any that may affect communities of the Indian tribal governments. Hence, today's final rule amendments do not significantly or uniquely affect the communities of Indian tribal governments. Accordingly, the requirements of section 3(b) of Executive Order 13084 do not apply.

D. Unfunded Mandates Reform Act

Title II of the Unfunded Mandates Reform Act (UMRA) of 1995, Pub. L. No. 104–4, establishes requirements for Federal agencies to assess the effects of their regulatory actions on State, local, and tribal governments and the private sector. Under section 202 of the UMRA, the EPA generally must prepare a written statement, including a cost-benefit analysis, for proposed and final rules with "Federal mandates" that may result in expenditures to State, local, and tribal governments, in the aggregate, or to the private sector, of $100 million or more in any 1 year. Before promulgating an EPA rule for which a written statement is needed, section 205 of the UMRA generally requires the EPA to identify and consider a reasonable number of regulatory alternatives and adopt the least costly, most cost-effective, or least burdensome alternative that achieves the objectives of the rule. The provisions of section 205 do not apply when they are inconsistent with applicable law. Moreover, section 205 allows the EPA to adopt an alternative other than the least costly, most cost-effective, or least burdensome alternative if the Administrator publishes with the final rule an explanation why that alternative was not adopted. Before the EPA establishes any regulatory requirements that may significantly or uniquely affect small governments, including tribal governments, it must have developed under section 203 of the UMRA a small government agency plan. The plan must provide for notifying potentially affected small governments, enabling officials of affected small governments to have meaningful and timely input in the development of the EPA regulatory proposals with significant Federal intergovernmental mandates, and informing, educating, and advising small governments on compliance with the regulatory requirements.

The EPA has determined that these final rule amendments do not include a Federal mandate that may result in estimated costs of $100 million or more to either State, local, or tribal governments in the aggregate or to the private sector in any 1 year, and that these final rule amendments do not significantly or uniquely impact small governments, because they contain no requirements that apply to such governments or impose obligations upon them. The EPA has not prepared

a budgetary impact statement or specifically addressed the selection of the least costly, most cost-effective, or least burdensome alternative. In addition, because small governments will not be significantly or uniquely affected by these final rule amendments, the EPA is not required to develop a plan with regard to small governments. Therefore, the requirements of the UMRA do not apply.

E. Regulatory Flexibility/Small Business Regulatory Enforcement Fairness Act

The Regulatory Flexibility Act of 1980 (5 U.S.C. 601, *et seq.*), as amended by the Small Business Regulatory Enforcement Fairness Act (SBREFA) of 1996, requires the EPA to give special consideration to the effect of Federal regulations on small entities and to consider regulatory options that might mitigate any such impacts. The EPA must prepare a regulatory flexibility analysis unless the EPA certifies that the rule will not have a "significant impact on a substantial number of small entities." Small entities include small businesses, small not-for-profit enterprises, and small government jurisdictions.

These final rule amendments would not have a significant impact on a substantial number of small entities because they clarify and make corrections to the promulgated HSC NESHAP, but impose no additional regulatory requirements on owners or operators of affected sources.

F. Paperwork Reduction Act

The information collection request (ICR) was submitted to the OMB under the *Paperwork Reduction Act* (44 U.S.C. 3501, *et seq.*) at the time this rule was originally promulgated. These final rule amendments to the HSC NESHAP will have no impact on the information collection burden estimates made previously. Therefore, the ICR has not been revised.

G. Executive Order 13045: Protection of Children from Environmental Health Risks and Safety Risks

Executive Order 13045, "Protection of Children from Environmental Health Risks and Safety Risks" (62 FR 19885, April 23, 1997), applies to any rule that (1) is determined to be "economically significant" as defined under Executive Order 12866, and (2) concerns an environmental health or safety risk that the EPA has reason to believe may have a disproportionate effect on children. If the regulatory action meets both criteria, the EPA must evaluate the environmental health or safety effects of the planned rule on children, and explain why the planned regulation is preferable to other potentially effective and reasonably feasible alternatives considered by the EPA.

The EPA interprets Executive Order 13045 as applying only to those regulatory actions that are based on health or safety risks, so that the analysis required under section 5–501 of the Executive Order has the potential to influence the regulation. These final rule amendments are not subject to Executive Order 13045 because they are not an "economically significant" regulatory action as defined by Executive Order 12866 and are based on technology performance rather than health or risks that may disproportionately affect children.

H. Congressional Review Act

The Congressional Review Act, 5 U.S.C. 801, *et seq.*, as added by the SBREFA of 1996, generally provides that before a rule may take effect, the agency promulgating the rule must submit a rule report, which includes a copy of the rule, to each House of the Congress and to the Comptroller General of the United States. The EPA will submit a report containing this direct final rule and other required information to the United States Senate, the United States House of Representatives, and the Comptroller General of the United States prior to publication of this final rule in the **Federal Register**. A major rule cannot take effect until 60 days after it is published in the **Federal Register**. These final amendments are not a "major rule" as defined by 5 U.S.C. 804(2).

I. National Technology Transfer and Advancement Act

Section 12(d) of the National Technology Transfer and Advancement Act (NTTAA) of 1995, Public Law 104–113, Section 12(d) (15 U.S.C. 272 note), directs the EPA to use voluntary consensus standards in its regulatory activities unless to do so would be inconsistent with applicable law or otherwise impractical. Voluntary consensus standards are technical standards (e.g., materials specifications, test methods, sampling procedures, business practices, etc.) that are developed or adopted by one or more voluntary consensus standards bodies. The NTTAA requires the EPA to provide Congress, through OMB, with explanations when the EPA decides not to use available and applicable voluntary consensus standards. This action does not involve the proposal of any new technical standards.

As part of a larger effort, the EPA is undertaking a project to cross-reference existing voluntary consensus standards on testing, sampling, and analysis with current and future EPA test methods. When completed, this project will assist the EPA in identifying potentially applicable voluntary consensus standards which can then be evaluated for equivalency and applicability in determining compliance with future regulations.

List of Subjects in 40 CFR Part 63

Environmental protection, Administrative practice and procedure, Air pollution control, Hazardous substances, Intergovernmental relations, Reporting and recordkeeping requirements.

Dated: November 29, 1999.

Carol M. Browner,

Administrator.

For the reasons set out in the preamble, part 63, title 40, chapter I of the Code of Federal Regulations is amended as follows.

PART 63—[AMENDED]

1. The authority for part 63 continues to read as follows:

Authority: 42 U.S.C. 7401, *et seq.*

Subpart T—National Emission Standards for Halogenated Solvent Cleaning

2. Section 63.461 is amended by adding, in alphabetical order, definitions for "Air knife system," "Combined squeegee and air knife system," "Remote reservoir continuous web cleaning machine," "Squeegee system," and "Superheated part technology," and by revising the definition of "Continuous web cleaning machine" to read as follows:

§ 63.461 Definitions.

* * * * *

Air knife system means a device that directs forced air at high pressure, high volume, or a combination of high pressure and high volume, through a small opening directly at the surface of a continuous web part. The purpose of this system is to remove the solvent film from the surfaces of the continuous web part.

* * * * *

Combined squeegee and air-knife system means a system consisting of a combination of a squeegee system and an air-knife system within a single enclosure.

* * * * *

Continuous web cleaning machine means a solvent cleaning machine in

which parts such as film, coils, wire, and metal strips are cleaned at speeds typically in excess of 11 feet per minute. Parts are generally uncoiled, cleaned such that the same part is simultaneously entering and exiting the solvent application area of the solvent cleaning machine, and then recoiled or cut. For the purposes of this subpart, all continuous web cleaning machines are considered to be a subset of in-line solvent cleaning machines.

* * * * *

Remote reservoir continuous web cleaning machine means a continuous web cleaning machine in which there is no exposed solvent sump. In these units, the solvent is pumped from an enclosed chamber and is typically applied to the continuous web part through a nozzle or series of nozzles. The solvent then drains from the part and is collected and recycled through the machine, allowing no solvent to pool in the work or cleaning area.

* * * * *

Squeegee system means a system that uses a series of pliable surfaces to remove the solvent film from the surfaces of the continuous web part. These pliable surfaces, called squeegees, are typically made of rubber or plastic media, and need to be periodically replaced to ensure continued proper function.

* * * * *

Superheated part technology means a system that is part of the continuous web process that heats the continuous web part either directly or indirectly to a temperature above the boiling point of the cleaning solvent. This could include a process step, such as a tooling die that heats the part as it is processed, as long as the part remains superheated through the cleaning machine.

* * * * *

3. Section 63.462 is amended by revising paragraph (c) introductory text, paragraph (c)(8), and adding paragraph (c)(9) to read as follows:

§ 63.462 Batch cold cleaning machine standards.

* * * * *

(c) Each owner or operator of a batch cold solvent cleaning machine complying with paragraph (a)(2) or (b) of this section shall comply with the work and operational practice requirements specified in paragraphs (c)(1) through (c)(9) of this section as applicable.

* * * * *

(8) Except as provided in paragraph (c)(9) of this section, sponges, fabric, wood, and paper products shall not be cleaned.

(9) The prohibition in paragraph (c)(8) of this section does not apply to the cleaning of porous materials that are part of polychlorinated biphenyl (PCB) laden transformers if those transformers are handled throughout the cleaning process and disposed of in compliance with an approved PCB disposal permit issued in accordance with the Toxic Substances Control Act.

* * * * *

4. Section 63.463 is amended by:

a. Revising paragraph (a) introductory text;

b. Revising paragraph (c) introductory text;

c. Revising paragraph (d) introductory text;

d. Revising paragraph (e) introductory text and paragraph (e)(2) introductory text;

e. Adding paragraphs (e)(2)(viii) through (xi); and

f. Adding paragraphs (g) and (h).

The revisions and additions read as follows:

§ 63.463 Batch vapor and in-line cleaning machine standards.

(a) Except as provided in § 63.464 for all cleaning machines, each owner or operator of a solvent cleaning machine subject to the provisions of this subpart shall ensure that each existing or new batch vapor or in-line solvent cleaning machine subject to the provisions of this subpart conforms to the design requirements specified in paragraphs (a)(1) through (7) of this section. The owner or operator of a continuous web cleaning machine shall comply with the requirements of paragraph (g) or (h) of this section, as appropriate, in lieu of complying with this paragraph.

* * * * *

(c) Except as provided in § 63.464 for all cleaning machines, each owner or operator of an in-line cleaning machine shall comply with paragraph (c)(1) or (2) of this section as appropriate. The owner or operator of a continuous web cleaning machine shall comply with the requirements of paragraph (g) or (h) of this section, as appropriate, in lieu of complying with this paragraph.

* * * * *

(d) Except as provided in § 63.464 for all cleaning machines, each owner or operator of an existing or new batch vapor or in-line solvent cleaning machine shall meet all of the following required work and operational practices specified in paragraphs (d)(1) through (12) of this section as applicable. The owner or operator of a continuous web cleaning machine shall comply with the requirements of paragraph (g) or (h) of this section, as appropriate, in lieu of complying with this paragraph.

* * * * *

(e) Each owner or operator of a solvent cleaning machine complying with paragraph (b), (c), or (g) of this section shall comply with the requirements specified in paragraphs (e)(1) through (4) of this section.

* * * * *

(2) Determine during each monitoring period whether each control device used to comply with these standards meets the requirements specified in paragraphs (e)(2)(i) through (xi) of this section.

* * * * *

(viii) If a superheated part system is used to comply with the standards for continuous web cleaning machines in paragraph (g) of this section, the owner or operator shall ensure that the temperature of the continuous web part is at least 10 degrees Fahrenheit above the solvent boiling point while the part is traveling through the cleaning machine.

(ix) If a squeegee system is used to comply with the continuous web cleaning requirements of paragraph (g)(3)(iii) of this section, the owner or operator shall comply with the following requirements.

(A) Determine the appropriate maximum product throughput for the squeegees used in the squeegee system, as described in § 63.465(f).

(B) Conduct the weekly monitoring required by § 63.466(a)(3). Record both the results of the visual inspection and the length of continuous web product cleaned during the previous week.

(C) Calculate the total amount of continuous web product processed since the squeegees were replaced and compare to the maximum product throughput for the squeegees.

(D) Ensure squeegees are replaced at or before the maximum product throughput is attained.

(E) Redetermine the maximum product throughput for the squeegees if any solvent film is visible on the continuous web part immediately after it exits the cleaning machine.

(x) If an air knife system is used to comply with the continuous web cleaning requirements of paragraph (g)(3)(iii) of this section, the owner or operator shall comply with the following requirements.

(A) Determine the air knife parameter and parameter value that demonstrate to the Administrator's satisfaction that the air knife is properly operating. An air knife is properly operating if no visible solvent film remains on the continuous web part after it exits the cleaning machine.

(B) Maintain the selected air knife parameter value at the level determined in paragraph (a) of this section.

(C) Conduct the weekly monitoring required by § 63.466(a)(3).

(D) Redetermine the proper air knife parameter value if any solvent film is visible on the continuous web part immediately after it exits the cleaning machine.

(xi) If a combination squeegee and air knife system is used to comply with the continuous web cleaning requirements of paragraph (g)(3)(iii) of this section, the owner or operator shall comply with the following requirements.

(A) Determine the system parameter and value that demonstrate to the Administrator's satisfaction that the system is properly operating.

(B) Maintain the selected parameter value at the level determined in paragraph (a) of this section.

(C) Conduct the weekly monitoring required by § 63.466(a)(3).

(D) Redetermine the proper parameter value if any solvent film is visible on the continuous web part immediately after it exits the cleaning machine.

* * * * *

(g) Except as provided in § 63.464 and in paragraph (h) of this section for remote reservoir continuous web cleaning machines, each owner or operator of a continuous web cleaning machine shall comply with paragraphs (g)(1) through (4) of this section for each continuous web cleaning machine.

(1) Except as provided in paragraph (g)(2) of this section, install, maintain, and operate one of the following control combinations on each continuous web cleaning machine.

(i) For each existing continuous web cleaning machine, the following control combinations are allowed:

(A) Superheated vapor or superheated part technology, and a freeboard ratio of 1.0 or greater.

(B) Freeboard refrigeration device and a freeboard ratio of 1.0 or greater.

(C) Carbon adsorption system meeting the requirements of paragraph (e)(2)(vii) of this section.

(ii) For each new continuous web cleaning machine, the following control combinations are allowed:

(A) Superheated vapor or superheated part technology, and a freeboard refrigeration device.

(B) A freeboard refrigeration device and a carbon adsorber meeting the requirements of paragraph (e)(2)(vii) of this section.

(C) Superheated vapor or superheated part technology, and a carbon adsorber meeting the requirements of paragraph (e)(2)(vii) of this section.

(2) If a carbon adsorber system can be demonstrated to the Administrator's satisfaction to have an overall solvent control efficiency (*i.e.*, capture efficiency removal efficiency) of 70 percent or greater, this system is equivalent to the options in paragraph (g) of this section.

(3) In lieu of complying with the provisions of paragraph (a) of this section, the owner or operator of a continuous web cleaning machine shall comply with the following provisions:

(i) Each cleaning machine shall meet one of the following control equipment or technique requirements:

(A) An idling and downtime mode cover, as described in paragraph (d)(1)(i) of this section, that may be readily opened or closed; that completely covers the cleaning machine openings when in place; and is free of cracks, holes, and other defects. A continuous web part that completely occupies an entry or exit port when the machine is idle is considered to meet this requirement.

(B) A reduced room draft as described in paragraph (e)(2)(ii) of this section.

(C) Gasketed or leakproof doors that separate both the continuous web part feed reel and take-up reel from the room atmosphere if the doors are checked according to the requirements of paragraph (e)(2)(iii) of this section.

(D) A cleaning machine that is demonstrated to the Administrator's satisfaction to be under negative pressure during idling and downtime and is vented to a carbon adsorption system that meets the requirements of either paragraph (e)(2)(vii) of this section or paragraph (g)(2) of this section.

(ii) Each continuous web cleaning machine shall have a freeboard ratio of 0.75 or greater unless that cleaning machine is a remote reservoir continuous web cleaning machine.

(iii) Each cleaning machine shall have an automated parts handling system capable of moving parts or parts baskets at a speed of 3.4 meters per minute (11 feet per minute) or less from the initial loading of parts through removal of cleaned parts, unless the cleaning machine is a continuous web cleaning machine that has a squeegee system or air knife system installed, maintained, and operated on the continuous web cleaning machine meeting the requirements of paragraph (e) of this section.

(iv) Each vapor cleaning machine shall be equipped with a device that shuts off the sump heat if the sump liquid solvent level drops to the sump heater coils.

(v) Each vapor cleaning machine shall be equipped with a vapor level control device that shuts off sump heat if the vapor level in the vapor cleaning machine rises above the height of the primary condenser.

(vi) Each vapor cleaning machine shall have a primary condenser.

(vii) Each cleaning machine that uses an exhaust shall be designed and operated to route all collected solvent vapors through a properly operated and maintained carbon adsorber that meets the requirements of paragraph (e)(2)(ii) of this section.

(4) In lieu of complying with the provisions of paragraph (d) of this section, the owner or operator of a continuous web cleaning machine shall comply with the following provisions:

(i) Control air disturbances across the cleaning machine opening(s) by incorporating one of the following control equipment or techniques:

(A) Cover(s) to each solvent cleaning machine shall be in place during the idling mode and during the downtime mode unless either the solvent has been removed from the machine or maintenance or monitoring is being performed that requires the cover(s) in place. A continuous web part that completely occupies an entry or exit port when the machine is idle is considered to meet this requirement.

(B) A reduced room draft as described in paragraph (e)(2)(ii) of this section.

(C) Gasketed or leakproof doors or covers that separate both the continuous web part feed reel and take-up reel from the room atmosphere if the doors are checked according to the requirements of paragraph (e)(2)(iii) of this section.

(D) A cleaning machine that is demonstrated to the Administrator's satisfaction to be under negative pressure during idling and downtime and is vented to a carbon adsorption system that meets either the requirements of paragraph (e)(2)(vii) of this section or paragraph (g)(2) of this section.

(ii) Any spraying operations shall be conducted in a section of the solvent cleaning machine that is not directly exposed to the ambient air (*i.e.*, a baffled or enclosed area of the solvent cleaning machine) or within a machine having a door or cover that meets the requirements of paragraph (g)(4)(i)(C) of this section.

(iii) During startup of each vapor cleaning machine, the primary condenser shall be turned on before the sump heater.

(iv) During shutdown of each vapor cleaning machine, the sump heater shall be turned off and the solvent vapor layer

allowed to collapse before the primary condenser is turned off.

(v) When solvent is added or drained from any solvent cleaning machine, the solvent shall be transferred using threaded or other leakproof couplings, and the end of the pipe in the solvent sump shall be located beneath the liquid solvent surface.

(vi) Each solvent cleaning machine and associated controls shall be maintained as recommended by the manufacturers of the equipment or using alternative maintenance practices that have been demonstrated to the Administrator's satisfaction to achieve the same or better results as those recommended by the manufacturer.

(vii) Waste solvent, still bottoms, sump bottoms, and waste absorbent materials used in the cleaning process for continuous web cleaning machines shall be collected and stored in waste containers. The closed containers may contain a device that would allow pressure relief, but would not allow liquid solvent to drain from the container.

(viii) Except as provided in paragraph (g)(4)(ix) of this section, sponges, fabric, wood, and paper products shall not be cleaned.

(ix) The prohibition in paragraph (g)(4)(viii) of this section does not apply to absorbent materials that are used as part of the cleaning process of continuous web cleaning machines, including rollers and roller covers.

(h) Except as provided in § 63.464, each owner or operator of a remote reservoir continuous web cleaning machine shall comply with paragraphs (h)(1) through (4) of this section.

(1) Except as provided in paragraph (h)(2) of this section, install, maintain, and operate one of the following controls on each new remote reservoir continuous web cleaning machine.

(i) Superheated vapor or superheated part technology.

(ii) A carbon adsorber meeting the requirements of paragraph (e)(2)(vii) of this section.

(iii) If a carbon adsorber system can be demonstrated to the Administrator's satisfaction to have an overall solvent control efficiency (*i.e.*, capture efficiency removal efficiency) of 70 percent or greater, this system is equivalent to the options in paragraphs (h)(1)(i) and (h)(1)(ii) of this section.

(2) In lieu of complying with the provisions of paragraph (a) of this section, the owner or operator of a remote reservoir continuous web cleaning machine shall comply with the following provisions:

(i) Each cleaning machine shall have an automated parts handling system capable of moving parts or parts baskets at a speed of 3.4 meters per minute (11 feet per minute) or less from the initial loading of parts through removal of cleaned parts, unless the cleaning machine is a continuous web cleaning machine that has a squeegee system or air knife system installed, maintained, and operated on the continuous web cleaning machine meeting the requirements of paragraph (e) of this section.

(ii) Each vapor cleaning machine shall be equipped with a device that shuts off the sump heat if the sump liquid solvent level drops to the sump heater coils.

(iii) Each vapor cleaning machine shall be equipped with a vapor level control device that shuts off sump heat if the vapor level in the vapor cleaning machine rises above the height of the primary condenser.

(iv) Each vapor cleaning machine shall have a primary condenser.

(v) Each cleaning machine that uses an exhaust shall be designed and operated to route all collected solvent vapors through a properly operated and maintained carbon adsorber that meets the requirements of either paragraph (e)(2)(vii) of this section or paragraph (g)(2) of this section.

(3) In lieu of complying with the provisions of paragraph (d) of this section, the owner or operator of a remote reservoir continuous web cleaning machine shall comply with the following provisions:

(i) Any spraying operations shall be conducted in a section of the solvent cleaning machine that is not directly exposed to the ambient air (*i.e.*, a baffled or enclosed area of the solvent cleaning machine) or within a machine having a door or cover that meets the requirements of paragraph (g)(4)(i)(C) of this section.

(ii) During startup of each vapor cleaning machine, the primary condenser shall be turned on before the sump heater.

(iii) During shutdown of each vapor cleaning machine, the sump heater shall be turned off and the solvent vapor layer allowed to collapse before the primary condenser is turned off.

(iv) When solvent is added or drained from any solvent cleaning machine, the solvent shall be transferred using threaded or other leakproof couplings, and the end of the pipe in the solvent sump shall be located beneath the liquid solvent surface.

(v) Each solvent cleaning machine and associated controls shall be maintained as recommended by the manufacturers of the equipment or using alternative maintenance practices that have been demonstrated to the Administrator's satisfaction to achieve the same or better results as those recommended by the manufacturer.

(vi) Waste solvent, still bottoms, sump bottoms, and waste absorbent materials used in the cleaning process for continuous web cleaning machines shall be collected and stored in waste containers. The closed containers may contain a device that would allow pressure relief, but would not allow liquid solvent to drain from the container.

(vii) Except as provided in paragraph (h)(3)(viii) of this section, sponges, fabric, wood, and paper products shall not be cleaned.

(viii) The prohibition in paragraph (h)(3)(vii) of this section does not apply to absorbent materials that are used as part of the cleaning process of continuous web cleaning machines, including rollers and roller covers.

5. Section 63.464 is amended by adding paragraph (d) to read as follows:

§ 63.464 Alternative Standards.

* * * * *

(d) As an alternative to meeting the requirements in § 63.463, each owner or operator of a continuous web cleaning machine can demonstrate an overall cleaning system control efficiency of 70 percent using the procedures in § 63.465(g).

6. Section 63.465 is amended by:

a. Revising paragraph (a);

b. Revising paragraph (b);

c. Revising paragraph (c) introductory text; and

d. Adding paragraphs (f), (g) and (h).

The revisions and additions read as follows:

§ 63.465 Test methods.

* * * * *

(a) Except as provided in paragraphs (f) and (g) of this section for continuous web cleaning machines, each owner or operator of a batch vapor or in-line solvent cleaning machine complying with an idling emission limit standard in § 63.463(b)(1)(ii), (b)(2)(ii), (c)(1)(ii), or (c)(2)(ii) shall determine the idling emission rate of the solvent cleaning machine using Reference Method 307 in appendix A of this part.

(b) Except as provided in paragraphs (f) and (g) of this section for continuous web cleaning machines, each owner or operator of a batch vapor or in-line solvent cleaning machine complying with § 63.464 shall, on the first operating day of every month, ensure that the solvent cleaning machine system contains only clean liquid solvent. This includes, but is not limited to, fresh unused solvent, recycled solvent and used solvent that has been

cleaned of soils. A fill-line must be indicated during the first month the measurements are made. The solvent level within the machine must be returned to the same fill-line each month, immediately prior to calculating monthly emissions as specified in paragraph (c) of this section. The solvent cleaning machine does not have to be emptied and filled with fresh unused solvent prior to the calculations.

(c) Except as provided in paragraphs (f) and (g) of this section for continuous web cleaning machines, each owner or operator of a batch vapor or in-line solvent cleaning machine complying with § 63.464 shall, on the first operating day of the month, comply with the requirements specified in paragraphs (c)(1) through (3) of this section.

* * * * *

(f) Each owner or operator of a continuous web cleaning machine using a squeegee system to comply with § 63.463(g)(3) shall determine the maximum product throughput using the method in this paragraph. The maximum product throughput for each squeegee type used at a facility must be determined prior to December 2, 1999, the compliance date for these units.

(1) Conduct daily visual inspections of the continuous web part. This monitoring shall be conducted at the point where the continuous web part exits the squeegee system. It is not necessary for the squeegees to be new at the time monitoring is begun if the following two conditions are met:

(i) The continuous web part leaving the squeegee system has no visible solvent film.

(ii) The amount of continuous web that has been processed through the squeegees since the last replacement is known.

(2) Continue daily monitoring until a visible solvent film is noted on the continuous web part.

(3) Determine the length of continuous web product that has been cleaned using the squeegee since it was installed.

(4) The maximum product throughput for the purposes of this rule is equal to the time it takes to clean 95 percent of the length of product determined in paragraph (f)(3) of this section. This time period, in days, may vary depending on the amount of continuous web product cleaned each day.

(g) Each owner or operator of a continuous web cleaning machine demonstrating compliance with the alternative standard of § 63.464(d) shall, on the first day of every month, ensure that the solvent cleaning machine contains only clean liquid solvent. This includes, but is not limited to, fresh unused solvent, recycled solvent, and used solvent that has been cleaned of soils. A fill-line must be indicated during the first month the measurements are made. The solvent level with the machine must be returned to the same fill-line each month, immediately prior to calculating overall cleaning system control efficiency emissions as specified in paragraph (h) in this section. The solvent cleaning machine does not need to be emptied and filled with fresh unused solvent prior to the calculation.

(h) Each owner or operator of a continuous web cleaning machines complying with § 63.464(d) shall, on the first operating day of the month, comply with the following requirements.

(1) Using the records of all solvent additions, solvent deletions, and solvent recovered for the previous monthly reporting period required under § 63.467(e), determine overall cleaning system control efficiency (Eo) using Equation 8 as follows:

$$E_O = R_i / \left(R_i + \left(Sa_i - SSR_i\right)\right) \qquad \text{(Eq. 8)}$$

Where:

E_o = overall cleaning system control efficiency

R_i = the total amount of halogenated HAP liquid solvent recycled to the solvent cleaning machine during the most recent monthly reporting period i, (kilograms of solvent per month).

Sa_i = the total amount of halogenated HAP liquid solvent added to the solvent cleaning machine during the most recent monthly reporting period i, (kilograms of solvent per month).

SSR_i = the total amount of halogenated HAP solvent removed from the solvent cleaning machine in solid waste, obtained as described in paragraph (c)(2) of this section, during the most recent monthly reporting period i, (kilograms of solvent per month).

7. Section 63.466 is amended by revising paragraph (a) introductory text and adding paragraphs (a)(3) through (5) to read as follows:

§ 63.466 Monitoring procedures.

(a) Except as provided in paragraph (g) of this section, each owner or operator of a batch vapor or in-line solvent cleaning machine complying with the equipment standards in § 63.463(b)(1)(i), (b)(2)(i), (c)(1)(i), (c)(2)(i), (g)(1), or (g)(2) shall conduct monitoring and record the results on a weekly basis for the control devices, as appropriate, specified in paragraphs (a)(1) through (5) of this section.

* * * * *

(3) If a squeegee system, air knife system, or combination squeegee and air knife system is used to comply with the requirements of § 63.463(g) or (h), the owner or operator shall visually inspect the continuous web part exiting the solvent cleaning machine to ensure that no solvent film is visible on the part.

(4) Except as provided in paragraph (a)(5) of this section, if a superheated part system is used to comply with the requirements of § 63.463(g) or (h), the owner or operator shall use a thermometer, thermocouple, or other temperature measurement device to measure the temperature of the continuous web part while it is in the solvent cleaning machine. This measurement can also be taken at the exit of the solvent cleaning machine.

(5) As an alternative to complying with paragraph (a)(4) of this section, the owner or operator can provide data, sufficient to satisfy the Administrator, that demonstrate that the part temperature remains above the boiling point of the solvent at all times that the part is within the continuous web solvent cleaning machine. This data could include design and operating conditions such as information supporting any exothermic reaction inherent in the processing.

* * * * *

8. Section 63.467 is amended by revising paragraph (a) introductory text, paragraph (c) introductory text and by adding paragraph (a)(6), paragraph (a)(7) and paragraph (e) to read as follows:

§ 63.467 Recordkeeping requirements.

(a) Each owner or operator of a batch vapor or in-line solvent cleaning machine complying with the provisions of § 63.463 shall maintain records in written or electronic form specified in paragraphs (a)(1) through (7) of this section for the lifetime of the machine.

* * * * *

(6) If a squeegee system is used to comply with these standards, records of the test required by § 63.466(f) to determine the maximum product throughput for the squeegees.

(7) If an air knife system or a combination squeegee and air knife system is used to comply with these standards, records of the determination of the proper operating parameter and parameter value for the air knife system.

* * * * *

(c) Except as provided in paragraph (e) of this section for continuous web cleaning machines, each owner or operator of a batch vapor or in-line

solvent cleaning machine complying with the provisions of § 63.464 shall maintain records specified in paragraphs (c)(1) through (3) of this section either in electronic or written form for a period of 5 years.

* * * * *

(e) Each owner or operator of a continuous web cleaning machine complying with the provisions of § 63.464(d) shall maintain the following records in either electronic or written form for a period of 5 years.

(1) The dates and amounts of solvent that are added to the solvent cleaning machine.

(2) The dates and amounts of solvent that are recovered from the desorption of the carbon adsorber system.

(3) The solvent composition of wastes removed from each cleaning machine as determined using the procedures in § 63.465(c)(2).

(4) Calculation sheets showing the calculation and results of determining the overall cleaning system control efficiency, as required by § 63.465.

[FR Doc. 99–31356 Filed 12–2–99; 8:45 am]

BILLING CODE 6560–50–P

Intergovernmental relations, Ozone, Reporting and recordkeeping requirements, Sulfur Oxides.

Dated: November 9, 1999.

Felicia Marcus,

Regional Administrator, Region IX.

Part 52, chapter I, title 40 of the Code of Federal Regulations is amended as follows:

PART 52—[AMENDED]

1. The authority citation for part 52 continues to read as follows:

Authority: 42 U.S.C. 7401 *et seq.*

Subpart F—California

2. Section 52.220 is amended by adding paragraphs (c)(264)(i)(C) and (266)(i)(A)(*2*).

§ 52.220 Identification of Plan.

* * * * *

(c) * * *

(264) * * *

(i) * * *

(C) Ventura County Air Pollution Control District.

(*1*) Rule 64, adopted on April 13, 1999.

* * * * *

(266) * * *

(i) * * *

(A) * * *

(*2*) Rule 431.1, adopted on November 4, 1997 and amended on June 12, 1998.

* * * * *

[FR Doc. 99–31212 Filed 12–2–99; 8:45 am]

BILLING CODE 6560–50–U

ENVIRONMENTAL PROTECTION AGENCY

40 CFR Part 63

[AD–FRL–6500–2]

RIN 2060–A137

National Emission Standards for Hazardous Air Pollutants for Ethylene Oxide Commercial Sterilization and Fumigation Operations

AGENCY: Environmental Protection Agency (EPA).

ACTION: Interim final rule.

SUMMARY: Today's action suspends the National Emission Standards for Hazardous Air Pollutants for Ethylene Oxide Commercial Sterilization and Fumigation Operations (EO NESHAP) requirements for chamber exhaust and aeration room vents. The suspension allows affected sources subject to the EO NESHAP to defer compliance with the NESHAP requirements for chamber exhaust until December 6, 2001 and aeration room vents until December 6, 2000. This suspension does not affect the requirement for sources subject to the EO NESHAP to comply with provisions for sterilizer vents. This action does not change the level of the standards or the intent of the NESHAP promulgated in 1994.

DATES: This action is effective December 3, 1999. Comments may be submitted until January 3, 2000.

ADDRESSES: Docket No. A–88–03, category VIII Amendments, contains supporting information used in developing the standards. The docket is located at the U.S. Environmental Protection Agency, 401 M Street, SW, Washington, DC 20460 in room M–1500, Waterside Mall (ground floor), and may be inspected from 8:30 a.m. to 5:30 p.m., Monday through Friday, excluding legal holidays. This docket also contains information considered by the EPA in proposing and promulgating the original EO NESHAP.

FOR FURTHER INFORMATION CONTACT: For information concerning the analysis performed in developing this interim rule, contact David W. Markwordt at the Emission Standards Division (MD–13), U.S. Environmental Protection Agency, Research Triangle Park, North Carolina 27711; telephone number (919) 541–0837, facsimile (919) 541–0942, e-mail address markwordt.david@epa.gov.

SUPPLEMENTARY INFORMATION:

Docket

The docket is an organized file of information considered by the EPA in the development of this rulemaking. The docket is a dynamic file because material is added throughout the rulemaking process. The docketing system is intended to allow members of the public and industries involved to readily identify and locate documents so that they can effectively participate in the rulemaking process. Along with the proposed and promulgated standards and their preambles, the contents of the docket will serve as the record in the case of judicial review. (See section 307(d)(7)(A) of the Clean Air Act (Act).) The regulatory text and other materials related to this rulemaking are available for review in the docket or copies may be mailed on request from the Air Docket by calling (202) 260–7548. A reasonable fee may be charged for copying docket materials.

Judicial Review

Under section 307(b)(1) of the Clean Air Act (Act), judicial review of this final action is available only by filing a petition for review in the U.S. Court of Appeals for the District of Columbia Circuit within 60 days of today's publication of this interim final rule. Under section 307(b)(2) of the Act, the actions taken in today's notice may not be challenged later in civil or criminal proceedings brought by the EPA to enforce these requirements.

Technology Transfer Network

In addition to being available in the docket, an electronic copy of today's interim final rule is also available through the Technology Transfer Network (TTN). Following signature, a copy of the rule will be posted on the TTN's policy and guidance page for newly proposed or promulgated rules http://www.epa.gov/ttn/oarpg. The TTN provides information and technology exchange in various areas of air pollution control. If more information regarding the TTN is needed, call the TTN HELP line at (919) 541–5384.

Regulated Entities

Regulated categories and entities include:

TABLE 1.—REGULATED CATEGORIES AND ENTITIES

Entity category	Description/SIC code
Industrial	Medical suppliers/ 3841, 3842, Pharmaceuticals/2834, 5122, 2831, 2833. Spice manufactures/ 2099, 5149, 2034, 2035, 2046. Contract Sterilizers/ 7399, 7218, 8091.
Federal Government	Not Affected.
State/Local/Tribal Gov	Not Affected.

This table is not intended to be exhaustive, but rather provides a guide for readers regarding entities regulated by the NESHAP addressed in this interim final rule. If you have questions regarding the applicability of the NESHAP addressed in this interim final rule to a particular entity, consult the person listed in the preceding **FOR FURTHER INFORMATION** section.

I. What Is the Background for This Suspension?

On December 6, 1994, we promulgated the EO NESHAP which regulates emissions of ethylene oxide from new and existing commercial sterilization and fumigation operations using 1 ton or more of EO per year (59 FR 62585). The regulated category and entities affected by today's action are the sources described in 40 CFR 63.360. That provision includes commercial operations using ethylene oxide as a

sterilant and fumigant in the production of medical equipment and supplies, and in miscellaneous sterilization and fumigation operations at both major and area sources. Note that this description is not intended to be exhaustive but, rather, to provide a guide for readers interested in this suspension. To determine whether your facility is affected by today's action, you should carefully examine the applicability criteria in 40 CFR 63.360 and the explanation provided in this interim final rule. If you have questions about the applicability of today's action to a particular entity, consult the appropriate person listed in the preceding **FOR FURTHER INFORMATION CONTACT** section.

In July 1997, we learned of reports of explosions at ethylene oxide sterilization and fumigation facilities. We subsequently suspended the EO NESHAP for 1 year until December 6, 1998 to provide time to determine the appropriate action necessary to mitigate the cause of the explosions (62 FR 64736).

After becoming aware of the explosions, the industry worked through the Ethylene Oxide Sterilization Association (EOSA) to begin investigations. The EOSA established a Safety Committee in September 1997 which has been meeting on a bimonthly basis since then. Sterilization industry leaders, abatement device vendors, and Federal, State and local agencies have been participating in the Safety Committee meetings.

In a June 2, 1998 letter to EPA, the EOSA recommended, "additional time to consider safe and economical control, installation, operation and maintenance alternatives applicable to aeration and chamber exhaust (backvent) emissions * * *" (see Docket No. A–88–03). The Health Industries Manufacturers Association (HIMA) reviewed the recommendation. The EOSA and HIMA membership represent most of the ethylene oxide sterilization and fumigation industry. The EOSA "concluded that the oxidizer systems had not been properly integrated with traditional ethylene oxide sterilization process operations, that is, installation, operation and maintenance issues had not been sufficiently addressed by sterilizer operators." The EOSA also concluded that "improperly overfeeding the oxidizer system from the chamber backvent was the primary safety concern."

We also conducted an independent investigation of the accidents and reviewed reports prepared by EPA Regional Offices and by EOSA member sterilization companies and, based on that investigation and review, concurred with the industry conclusion and recommendation (see Docket No. A–88–03). We further suspended the EO NESHAP for both aeration room vents and chamber backvents for 1 year until December 6, 1999 to provide time to determine the appropriate action necessary to mitigate the cause of the explosions (63 FR 66990). Aeration room vents were included in the suspension because control systems typically integrate both vents to the same control device.

II. What Is the Rationale for Today's Suspension of Chamber Exhaust and Aeration Room Vent Requirements?

As noted above, in July 1997, the Agency learned of reports of explosions at ethylene oxide facilities. Several of these explosions occurred at facilities subject to the EO NESHAP. The Agency immediately began conducting a preliminary investigation to determine if the emission control equipment mandated by 40 CFR part 63, subpart O, was in any way associated with the cause of the problems at these facilities. The Agency, on December 9, 1997, wishing to adopt a cautious approach in order to assure public and worker safety, published in the **Federal Register** an interim final rule suspending 40 CFR part 63, subpart O (62 FR 64736). Since publication of the December 9, 1997 rule, both EPA and industry have continued to investigate the cause of the accidents.

In 1998, the Agency agreed with industry that, in the cases where explosions occurred, the catalytic oxidizer units were overfed with ethylene oxide in concentrations above the safe operations limit due to abnormal activation of the chamber exhaust (backvent). The Agency concluded that main vent emissions routed through the vacuum pump played no role in the explosions. The Agency also concluded that any emissions control technology necessary to comply with the EO NESHAP needs to be properly integrated into the sterilization system and operations and must reflect the full range of normal and abnormal conditions that may occur.

The suspension, in December 1998, for chamber exhaust vents was based on the assumption that sterilization chamber operators would be able to evaluate and integrate the emission control technology with sterilizer operation to ensure prevention of future explosions by December 6, 1999. To date, solutions to the safety problems have not been developed. Consequently, the EOSA and individual plant operators have requested EPA to eliminate the requirement for backdraft vents (see Docket No. A–88–03).

It is beyond the Agency's legal mandate and technical expertise to certify equipment for safe use. The Clean Air Act generally requires the Agency to assess existing emission control technology for application to non-controlled emission sources. The use of existing technology by some sources in the relevant category presumes the ability to operate that technology in a proven safe manner. At the time of promulgation (December 1994), state-of-the-art control technology for chamber exhaust emissions apparently involved safety hazards not known at that time. Therefore, the Agency will reconsider its original MACT determination for chamber exhaust vents and propose a course of action in the near future.

Today's 2-year suspension of control requirements for chamber exhaust emissions is based on the anticipated time required to propose and promulgate changes in the **Federal Register**. It's our intent to resolve this matter as quickly as possible, and we hope to finalize a revised rule in less than 2 years.

Today's 1-year suspension of control requirements for aeration room vents is based on the fact that many facilities are routing chamber exhaust emissions to the emission control device for aeration room vents. Facilities that control both aeration and chamber exhaust emissions via one abatement device will need to disconnect the chamber exhaust vent from the aeration room control device. Therefore, the Agency is providing time to separate chamber exhaust emissions from integrated control systems, if needed.

In this matter, we wish to err, if at all, on the side of safety. Accordingly, we are, today, further suspending the EO NESHAP emission limitation requirements in 40 CFR part 63, subpart O, for chamber exhaust and aeration room vents, as those emission points are defined at 40 CFR 63.361, until December 6, 2001 and December 6, 2000, respectively, pursuant to our general rulemaking authority under section 301(a) of the Act, 42 U.S.C. 7601(a). Sources must continue to comply with the EO NESHAP emission limitation requirements in 40 CFR part 63, subpart O, for sterilization chamber vents, as those emission points are defined at 40 CFR 63.361, because we have determined that their controls do not pose a safety concern.

Section 301(a) of the Act grants the Administrator of the EPA the authority "to prescribe such regulations as are necessary to carry out his functions

under this Act." Given the unique circumstances and uncertainty surrounding the EO NESHAP, as described in this interim final rule, EPA believes that it is necessary to further suspend this rule's requirements for chamber exhaust and aeration room vents for the safety of the public and workers in and around EO facilities. The control requirements of the EO NESHAP for chamber exhaust and aeration room vents continue to pose potential safety problems for which viable solutions are not currently available. This action is consistent with the objectives of the Act as stated in section 101(b), 42 U.S.C. 7401(b), "(T)he purposes of this subchapter are * * * to promote the public health and welfare and the productive capacity of its population * * *."

The original EO NESHAP and today's interim final rule are promulgated pursuant to section 307(d) of the Act, 42 U.S.C. 7607(d), which requires that any rule subject to that section be issued only after the public has received notice of, and an opportunity to comment on, the rule. However, section 307(d)(1) exempts from those requirements any rule for which the Agency finds under the Administrative Procedure Act, 5 U.S.C. 553(b), that providing prior notice-and-comment would be impracticable, unnecessary or contrary to the public interest.

We believe the circumstances presented here provide good cause to take this action without prior notice-and-comment. We find providing prior notice-and-comment would be impracticable and contrary to the public interest based on the potential ongoing danger to public and worker safety posed by the recent incidents at ethylene oxide facilities. There is simply not enough time to provide notice-and-comment procedures before the current compliance date of December 6, 1999 arrives, and until the compliance date is extended, sources are faced with having to install control equipment in time to meet the current compliance date. Only by omitting notice-and-comment from this action can we provide sources affected by the EO NESHAP with timely legal relief from the current compliance date while we further investigate the situation. Consequently, this action is being promulgated without prior notice-and-comment as provided for in section 307(b)(1) of the Act and is immediately effective as provided for in section 112(d)(10) of the Act.

Nonetheless, we are providing 30 days for submission of public comments. We will consider all written comments submitted in the allotted time period to determine if any change to this action is necessary.

In suspending the EO NESHAP requirements for chamber exhaust and aeration room vents, the Administrator wishes to remind the public and the regulated community that the role of the EPA has been and continues to be protection of public health and the environment in a way that is consistent with safety concerns.

III. Administrative Requirements

A. Paperwork Reduction Act

The information collection requirements of the EO NESHAP were submitted to and approved by the Office of Management and Budget (OMB). A copy of this Information Collection Request (ICR) document (OMB control number 2060–0283) may be obtained from Ms. Sandy Farmer, Information Policy Branch (2136), U.S. EPA, 401 M Street, SW, Washington, DC 20460, or by calling (202) 260–2740.

Today's action has no impact on the information collection burden estimates made previously. Today's action merely suspends the EO NESHAP requirements for chamber exhaust and aeration room vents for 1 year. This change does not impose new requirements. Consequently, the ICR has not been revised.

B. Executive Order 12866

Under Executive Order 12866 (58 FR 51735, October 4, 1993), EPA must determine whether the regulatory action is "significant" and therefore subject to review by OMB on the basis of the requirements of the Executive Order in addition to its normal review requirements. The Executive Order defines "significant regulatory action" as one that is likely to result in a rule that may:

(1) Have an annual effect on the economy of $100 million or more or adversely affect in a material way the economy, a sector of the economy, productivity, competition, jobs, the environment, public health or safety, or State, local, or Tribal governments or communities;

(2) Create a serious inconsistency or otherwise interfere with an action taken or planned by another agency;

(3) Materially alter the budgetary impact of entitlements, grants, user fees, or loan programs, or the rights and obligations of recipients thereof; or

(4) Raise novel legal or policy issues arising out of legal mandates, the President's priorities, or the principles set forth in the Executive Order.

Today's action does not fall within any of the four categories described above. Instead, it reduces the burden on certain sources by temporarily suspending the EO NESHAP requirements for chamber exhaust and aeration vents. Consequently, under Executive Order 12866, this action is not a "significant regulatory action" and is therefore not subject to review by OMB.

C. Executive Order 13132

Executive Order 13132, entitled "Federalism" (64 FR 43255, August 10, 1999), requires EPA to develop an accountable process to ensure "meaningful and timely input by State and local officials in the development of regulatory policies that have federalism implications." "Policies that have federalism implications" is defined in the Executive Order to include regulations that have "substantial direct effects on the States, on the relationship between the national government and the States, or on the distribution of power and responsibilities among the various levels of government." Under Executive Order 13132, EPA may not issue a regulation that has federalism implications, that imposes substantial direct compliance costs, and that is not required by statute, unless the federal government provides the funds necessary to pay the direct compliance costs incurred by State and local governments, or EPA consults with State and local officials early in the process of developing the proposed regulation. The EPA also may not issue a regulation that has federalism implications and that preempts State law unless the Agency consults with State and local officials early in the process of developing the proposed regulation.

If EPA complies by consulting, Executive Order 13132 requires EPA to provide to OMB, in a separately identified section of the preamble to the rule, a federalism summary impact statement (FSIS). The FSIS must include a description of the extent of EPA's prior consultation with State and local officials, a summary of the nature of their concerns and the Agency's position supporting the need to issue the regulation, and a statement of the extent to which the concerns of State and local officials have been met. Also, when EPA transmits a draft final rule with federalism implications to OMB for review pursuant to Executive Order 12866, EPA must include a certification from the agency's Federalism Official stating that EPA has met the requirements of Executive Order 13132 in a meaningful and timely manner.

This final rule will not have substantial direct effects on the States,

on the relationship between the national government and the States, or on the distribution of power and responsibilities among the various levels of government, as specified in Executive Order 13132. Today's action suspends existing requirements which were promulgated in December 1994. There are minimal, if any, impacts associated with this action, thus, the requirements of section 6 of the Executive Order do not apply to this rule.

D. Regulatory Flexibility/Small Business Regulatory Enforcement Fairness Act of 1996

Under the Regulatory Flexibility Act, Pub. L. 96–354, whenever an Agency publishes any proposed or final rule in the **Federal Register**, it must, except under certain circumstances, prepare a Regulatory Flexibility Analysis (RFA) that describes the impact of the rule on small entities (i.e., small businesses, organizations, and governmental jurisdictions). That analysis is not necessary if the Agency determines that the rule will not have a significant economic impact on a substantial number of small entities.

The EPA believes that there will be little or no adverse impact on any small entities as a result of the promulgation of this rule because, rather than imposing additional requirements, this rule provides additional time to comply with parts of the EO NESHAP. Because the impacts are anticipated to be insignificant or beneficial, EPA has concluded that this rule will not have a significant economic impact on a substantial number of small entities. Consequently, an RFA is not required.

E. Unfunded Mandates Reform Act

Title II of the Unfunded Mandates Reform Act of 1995 (UMRA), Public Law 104–4, establishes requirements for Federal agencies to assess the effects of their regulatory actions on State, local, and tribal governments and the private sector. Under section 202 of the UMRA, EPA generally must prepare a written statement, including a cost-benefit analysis, for proposed and final rules with "Federal mandates" that may result in expenditures to State, local, and tribal governments, in the aggregate, or to the private sector of $100 million or more in any 1 year. Before promulgating an EPA rule for which a written statement is needed, section 205 of the UMRA generally requires EPA to identify and consider a reasonable number of regulatory alternatives and adopt the least costly, most cost-effective or least burdensome alternative that achieves the objects of the rule. The provisions of section 205 do not apply when they are inconsistent with applicable law. Moreover, section 205 allows EPA to adopt an alternative other than the least costly, most cost-effective or least burdensome alternative if the Administrator publishes with the final rule an explanation of why that alternative was not adopted. Before EPA establishes any regulatory requirements that may significantly or uniquely affect small governments, including tribal governments, it must have developed under section 203 of the UMRA a small government agency plan. The plan must provide for notifying potentially affected small governments, enabling officials of affected small governments to have meaningful and timely input in the development of EPA regulatory proposals with significant Federal intergovernmental mandates, and informing, educating, and advising small governments on compliance with the regulatory requirements.

Today's rule contains no Federal mandates (under the regulatory provisions of Title II of the UMRA) for State, local, or tribal governments or the private sector. Instead, this rule provides additional time to comply with some requirements of the EO NESHAP. Because the rule is not expected to result in the expenditure by State, local, and tribal governments or the private sector of $100 million or more in any 1 year, the Agency has not prepared a budgetary impact statement or specifically addressed the selection of the least costly, most effective, or least burdensome alternative. Because small governments will not be significantly or uniquely affected by this rule, the Agency is not required to develop a plan with regard to small governments. For the reasons stated above, the requirements of the UMRA do not apply to this section.

F. National Technology Transfer and Advancement Act

Section 12 of the National Technology Transfer and Advancement Act of 1995 (NTTAA) requires Federal agencies to evaluate existing technical standards when developing new regulations. To comply with the NTTAA, EPA must consider and use "voluntary consensus standards" (VCS) if available and applicable when developing programs and policies unless doing so would be inconsistent with applicable law or otherwise impractical.

The EPA believes that the use of VCS in this interim final rule is impractical. The suspension of the EO NESHAP requirements for chamber exhaust and aeration room vents is merely a procedural action that does not require sources to take substantive steps that lend themselves to VCS.

G. Executive Order 13045

Executive Order 13045, entitled Protection of Children from Environmental Health Risks and Safety Risks (62 FR 19885, April 23, 1997), applies to any rule that (1) OMB determines is "economically significant" as defined under Executive Order 12866, and (2) EPA determines the environmental health or safety risk addressed by the rule has a disproportionate effect on children. If the regulatory action meets both criteria, the Agency must evaluate the environmental health or safety aspects of the planned rule on children, and explain why the planned regulation is preferable to other potentially effective and reasonably feasible alternatives considered by the Agency.

This interim final rule is not subject to the Executive Order because it is not economically significant as defined in E.O. 12866, and because the Agency does not have reason to believe the environmental health or safety risks addressed by this action present a disproportionate risk to children.

H. Executive Order 13084

Under Executive Order 13084, EPA may not issue a regulation that is not required by statute, that significantly or uniquely affects the communities of Indian tribal governments, and that imposes substantial direct compliance costs on those communities, unless the Federal government provides the funds necessary to pay the direct compliance costs incurred by the tribal governments, or EPA consults with those governments. If EPA complies by consulting, Executive Order 13084 requires EPA to provide to the Office of Management and Budget, in a separately identified section of the preamble to the rule, a description of the extent of EPA's prior consultation with representatives of affected tribal governments, a summary of the nature of their concerns, and a statement supporting the need to issue the regulation. In addition, Executive Order 13084 requires EPA to develop an effective process permitting elected officials and other representatives of Indian tribal governments "to provide meaningful and timely input in the development of regulatory policies on matters that significantly or uniquely affect their communities."

Today's rule does not significantly or uniquely affect the communities of Indian tribal governments. This interim final rule imposes no enforceable duties on these entities. Rather, the interim

final rule temporarily suspends certain regulatory requirements. Accordingly, the requirements of section 3(b) of Executive Order 13084 do not apply to this rule.

I. Congressional Review Act

Under the Small Business Regulatory Enforcement Fairness Act of 1996, we submitted a report containing these final amendments and other required information to the U.S. Senate, the U.S. House of Representatives, and the Comptroller General of the General Accounting Office prior to publication of these final amendments in the **Federal Register**. This is not a "major rule" as defined by the Small Business Regulatory Enforcement Fairness Act.

List of Subjects in 40 CFR Part 63

Environmental protection, Air pollution control, Ethylene oxide sterilization, Hazardous substances, Reporting and recordkeeping requirements.

Dated: November 29, 1999.

Carol M. Browner,

Administrator.

For the reasons set out in the preamble, title 40, chapter I, of the Code of Federal Regulations is amended as follows:

PART 63—[AMENDED]

1. The authority citation for part 63 continues to read as follows:

Authority: 42 U.S.C. 7401, *et seq.*

Subpart O—[Amended]

2. Section 63.360 is amended by revising paragraphs (g)(4), (g)(5), and (g)(6) and adding paragraphs (g)(7), (g)(8), (g)(9), and (g)(10) to read as follows:

§ 63.360 Applicability.

* * * * *

(g) * * *

(4) All aeration room vents subject to the emissions standards in § 63.362 with an initial startup date before December 6, 2000, no later than December 6, 2000.

(5) All aeration room vents subject to the emissions standards in § 63.362 with an initial startup date on or after December 6, 2000, immediately upon initial startup of the source.

(6) All aeration room vents at sources using less than 10 tons that increase their ethylene oxide usage after December 6, 2000, such that the aeration room vents become subject to the emissions standards in § 63.362, immediately upon becoming subject to the emission standards.

(7) All chamber exhaust vents subject to the emissions standards in § 63.362 with an initial startup date before December 6, 2001, no later than December 6, 2001.

(8) All chamber exhaust vents subject to the emissions standards in § 63.362 with an initial startup date on or after December 6, 2001, immediately upon initial startup of the source.

(9) All chamber exhaust vents at sources using less than 1 ton that increase their ethylene oxide usage after December 6, 2001, such that the chamber exhaust vents become subject to the emissions standards in § 63.362, immediately upon becoming subject to the emission standards.

(10) All chamber exhaust vents at sources using less than 10 tons that increase their ethylene oxide usage after December 6, 2001, such that the chamber exhaust vents become subject to the emissions standards in § 63.362(e)(1), immediately upon becoming subject to the emission standards.

* * * * *

[FR Doc. 99–31354 Filed 12–2–99; 8:45 am]

BILLING CODE 6560–50–P

ENVIRONMENTAL PROTECTION AGENCY

40 CFR Part 63

[AD–FRL–6500–1]

National Emission Standards for Hazardous Air Pollutants: Halogenated Solvent Cleaning

AGENCY: Environmental Protection Agency (EPA).

ACTION: Final rule; amendments.

SUMMARY: This action promulgates amendments to the "National Emission Standards for Hazardous Air Pollutants: Halogenated Solvent Cleaning" originally promulgated on December 2, 1994. These amendments to the rule were proposed on August 19, 1999. Today's action finalizes compliance options for continuous web cleaning machines, as well as amendments to the national emission standards for hazardous air pollutants (NESHAP) that apply to steam-heated vapor cleaning machines and to cleaning machines used to clean transformers. The EPA is finalizing these amendments to ensure that all owners or operators of solvent cleaning machines have appropriate and attainable requirements for their cleaning machines.

EFFECTIVE DATE: December 3, 1999.

ADDRESSES: Interested parties may review items used to support these final rule amendments at: Air and Radiation Docket and Information Center (6102), Attention Docket Number A–92–39, Room M–1500, U.S. Environmental Protection Agency, 401 M Street, SW, Washington, DC 20460.

FOR FURTHER INFORMATION CONTACT: For information concerning the standards, contact Mr. Paul Almodovar, Coatings and Consumer Products Group, Emission Standards Division (MD–13), U.S. Environmental Protection Agency, Research Triangle Park, North Carolina 27711, telephone number (919) 541–0283. For information regarding the applicability of this action to a particular entity, contact Ms. Acquanetta Delaney, Manufacturing Branch, Office of Compliance (2223A), U.S. Environmental Protection Agency, 401 M Street, SW, Washington, DC 20460; telephone (202) 564–7061.

SUPPLEMENTARY INFORMATION:

Docket

The docket number for this rulemaking is A–92–39. The docket is an organized file of information compiled by the EPA in the development of this rulemaking. The docket is a dynamic file because material is added throughout the rulemaking development. The docketing system is intended to allow members of the public and industries involved to readily identify and locate documents so that they can effectively participate in the rulemaking process. Along with the proposed and promulgated standards and their preambles, the docket contains the record in the case of judicial review. (See section 307(d)(7)(A) of the Clean Air Act.)

Regulated Entities

The following entities are potentially regulated by this final rule.

Category	SIC Codes	Examples of potentially regulated entities
Industry	33, 34, 36, and 37	Facilities engaging in cleaning operations using halogenated solvent cleaning machines.

This list is not intended to be exhaustive, but rather provides a guide for readers regarding entities likely to be affected by this action. This list includes the types of entities that the EPA is now aware could potentially be regulated by this action. Other types of entities not listed could also be affected. To determine whether your facility or company is regulated by this final rule, you should carefully examine the applicability criteria in § 63.460 of the promulgated rule. If you have any questions regarding the applicability of this final rule to a particular entity, consult the person listed in the preceding **FOR FURTHER INFORMATION CONTACT** section.

The information presented in this preamble is organized as follows:

I. Background
A. Why is EPA amending the NESHAP for halogenated solvent cleaning?
B. What is the purpose of these final rule amendments?
C. What changes have been made since the August 19, 1999 proposed amendments?
D. Do the changes in today's final rule amendments apply to my machines?
II. Review of Requirements for Continuous Web Cleaning Machines
A. How do I know if my machine is a continuous web cleaning machine?
B. How will these changes impact my continuous web cleaning machines?
C. How do I know if my machine is a "new" or an "existing" continuous web cleaning machine?
D. When must I comply with these new requirements?
III. Other Changes
A. What change is EPA making that applies to my transformer cleaning operations?
B. What changes impact my steam-heated vapor cleaning machines?
IV. Impacts
V. Administrative Requirements
A. Executive Order 12866: Regulatory Planning and Review
B. Executive Order 13132: Federalism
C. Executive Order 13084: Consultation and Coordination with Indian Tribal Governments
D. Unfunded Mandates Reform Act
E. Regulatory Flexibility/Small Business Regulatory Enforcement Fairness Act
F. Paperwork Reduction Act
G. Executive Order 13045: Protection of Children from Environmental Health Risks and Safety Risks
H. Congressional Review Act
I. National Technology Transfer and Advancement Act

I. Background

A. Why Is EPA Amending the NESHAP for Halogenated Solvent Cleaning?

The EPA promulgated the halogenated solvent cleaning (HSC) NESHAP on December 2, 1994, as subpart T of 40 CFR part 63 (59 FR 61801). That rule included requirements for batch and in-line cleaning machines and both control device and work practice requirements. A batch cleaning machine is defined in the HSC NESHAP as "a solvent cleaning machine in which individual parts or sets of parts move through the entire cleaning cycle before new parts are introduced." Inherent in some of the requirements is the understanding that the part or set of parts stops at one or various points in the machine for cleaning and for removal of cleaned parts. In contrast, an in-line cleaning machine (or continuous cleaning machine) is defined in the HSC NESHAP as "a solvent cleaning machine that uses an automated parts handling system, typically a conveyor, to automatically provide a continuous supply of parts to be cleaned."

After promulgation, several industry groups raised concerns about how some cleaning machines would be classified under the rule. These commenters stated that some machines did not clearly and completely fit into any of the categories of cleaning machines included in the HSC NESHAP. The machines in question included movie film cleaning machines and machines used to clean strips, rods, and wire.

After some review, the EPA concluded that these issues warranted additional consideration. On May 5, 1998 (63 FR 24768), the EPA issued an immediate stay of compliance for the continuous web cleaning machines until August 3, 1998. In that same action, the EPA proposed to extend the compliance date for these units for an additional year, to August 3, 1999, to allow for an equivalency determination. The EPA received comments on the proposed extension. One commenter expressed concern that the 1-year extension may not be sufficient time to review the data, complete the technical analysis, propose and promulgate an equivalency determination, and allow sufficient time for facilities to comply with the new requirements. The EPA recognized these concerns and on December 11, 1998 (63 FR 68397) extended the compliance date for continuous web cleaning machines to December 2, 1999.

On August 19, 1999, EPA published a direct final rule (64 FR 45187) and parallel proposal (64 FR 45221) to amend the "National Emission Standards for Hazardous Air Pollutants: Halogenated Solvent Cleaning." The proposed amendments would have provided additional compliance options for continuous web cleaning machines, as well as clarifications that apply to steam-heated vapor cleaning machines and to cleaning machines used to clean transformers.

The EPA stated in the direct final rule that if relevant, adverse comments were received by September 20, 1999, the EPA would publish a notice withdrawing the direct final rule before its effective date of October 18, 1999. The EPA received adverse comments on the direct final rule from two commenters on September 20, 1999 and, therefore, withdrew the direct final rule on October 18, 1999 (64 FR 56173). Today's final rule amendments are based on the public comments received on the proposed amendments.

B. What Is the Purpose of These Final Rule Amendments?

This final rule does two things. First, it promulgates alternative compliance requirements for continuous web cleaning machines consistent with the August 19, 1999 proposal (64 FR 45221). A continuous web cleaning machine is a cleaning machine that cleans a continuous web part at speeds typically in excess of 11 feet per minute. Changes to the rule impacting continuous web cleaning machines are discussed in section II.A of this final rule. Second, this final rule promulgates two minor changes, discussed in section III.B, that impact cleaning machines other than continuous web cleaning machines.

C. What Changes Have Been Made Since the August 19, 1999 Proposed Amendments?

The EPA has made several changes and clarifications to the amendments proposed on August 19, 1999 (64 FR 45221) in response to the public comments that were received. A full discussion of the comments and the EPA responses is included in the docket for this rulemaking. Following is a summary of the major changes that have been made to the proposed amendments.

1. Clarification of Requirements for Remote Reservoir Continuous Web Cleaning Machines

The EPA has clarified that the owner or operator of a remote reservoir continuous web cleaning machine is not required to comply with freeboard refrigerated device requirements or freeboard ratio requirements. The EPA concluded that these requirements are redundant to the emission reductions obtained from the remote reservoir design. Upon further review, the EPA concluded that a separate section devoted to remote reservoir continuous web cleaning machines was warranted to ensure the requirements applicable to these machines were clear; these requirements were added as § 63.463(h).

2. Equivalent Requirements for Complying With Downtime and Idling Mode Covers

The EPA has added equivalent requirements for covers during idling and downtime. These equivalent requirements include the ability to consider the continuous web part itself as a port cover if it fills the entry and exit port, thereby achieving the same control as a port cover. Also, a machine kept under negative pressure and vented to an appropriately maintained and operated carbon adsorption system is equivalent to maximum achievable control technology (MACT) and is now allowed under this rule.

3. Addition of an Alternative Standard for Continuous Web Cleaning Machines

The EPA has added an alternative standard for continuous web cleaning machines based on the calculation of an overall cleaning system control efficiency. This approach was recommended by a commenter and reviewed and accepted by the EPA.

4. Addition of Combined Squeegee and Air Knife System

Under the proposed amendments to the NESHAP, EPA allowed for the use of either a squeegee system or an air knife system. The EPA has clarified that a system that combines squeegees and air knives is allowed as long as the components are within a single enclosure. The visible emission test is not required until after the web part exits the combined system.

In addition to these changes, EPA wishes to clarify that there are four different compliance options that refer to carbon adsorber requirements for continuous web cleaning machines:

a. Under § 63.463(g)(1), a carbon adsorber system is allowed in the control device combinations for existing and new machines. The owners or operators of these machines must demonstrate that the exhaust concentration limit of 100 parts per million is maintained using the provisions of § 63.463(e)(2)(vii). The owners or operators must still demonstrate compliance with the work practice requirements and the basic design requirements contained in the rule.

b. Under § 63.463(g)(2), a carbon adsorption system with an overall control efficiency of 70 percent is allowed in lieu of complying with one of the control combinations cited above. The owners or operators of these machines are not required to demonstrate the 100 parts per million limit; the owners or operators must work with their regulating authority to define the appropriate monitoring parameters to demonstrate the 70 percent control. In addition, the owners or operators must demonstrate compliance with the work practice requirements and the basic design requirements contained in the rule.

c. Under § 63.463(g)(3)(vii) or § 63.463(h)(2)(v), any facility with a lip or other exhaust within a machine must ensure that the exhaust is vented to a carbon adsorber system. The carbon adsorber system can be shown to meet either the 100 parts per million exhaust limit of § 63.463(e)(2)(vii) or the 70 percent carbon adsorber system efficiency of § 63.463(g)(2).

d. Under the new alternative standard of § 63.464(d), an owner or operator may elect to use a carbon adsorber system (or any other emission control system) to demonstrate compliance with the overall solvent cleaning machine reduction efficiency of 70 percent. A facility complying with this option is not subject to the work practice or basic design requirements, which includes the squeegee and air knife requirements.

The EPA would also like to clarify that under the HSC NESHAP, emissions from multiple solvent cleaning machines are allowed to be controlled using a single carbon adsorber. In this situation, the affected source would need to develop and get approval from the regulatory authority of a procedure to apportion the solvent recovered by the carbon adsorber to each machine venting through it. A likely procedure would apportion the solvent recovered from the carbon adsorber based on the percentage of total fresh solvent added to each solvent cleaning machine.

D. Do the Changes in Today's Final Rule Amendments Apply to My Machines?

Today's final rule amendments only apply to you if your machines meet any of the following criteria:

1. Halogenated solvent cleaning machines that are classified as continuous web cleaning machines. (Changes impacting these machines are discussed in section II.B.)

2. Halogenated solvent cleaning machines that are used to clean polychlorinated biphenyl (PCB) laden transformers. (A change impacting these machines is discussed in section III.A.)

3. Halogenated solvent cleaning machines that are steam-heated vapor cleaning machines. (The definition of continuous web cleaning machines and a change impacting these machines is discussed in section II.B.)

II. Review of Requirements for Continuous Web Cleaning Machines

This section discusses changes made to the HSC NESHAP proposed amendments published on August 19, 1999 (64 FR 45221).

A. How Do I Know if My Machine Is a Continuous Web Cleaning Machine?

A continuous web cleaning machine is a solvent cleaning machine in which parts such as film, coils, wire, and metal strips are cleaned at speeds typically in excess of 11 feet per minute. Parts are generally uncoiled, cleaned such that the same part is simultaneously entering and exiting the solvent application area of the solvent cleaning machine, and then recoiled or cut. For the purposes of subpart T to 40 CFR part 63, all continuous web cleaning machines are considered to be a subset of in-line solvent cleaning machines. These units tend to be used in two distinct areas: movie film cleaning and continuous strip, wire, or rod cleaning.

Movie Film Cleaning

The movie film cleaning industry typically uses a continuous web cleaning machine to clean the surfaces on large reels of film. Typically, a reel is loaded onto the machine and the film threaded through a series of rollers. The film is then either fed into a vat or past a series of spray nozzles that apply the chlorinated solvent onto the film. The film is then dried using air jets, cloth pads, or a combination of both.

Strip, Rod, or Wire Cleaning

This group of continuous web cleaning machines cleans a more diverse product group, including large flat pieces of metal, metal rods, and thin wires. The machines can be dip tanks, spray applications, or a combination. While the EPA has currently only identified continuous web cleaning machines used to clean metal products, these machines may clean nonmetal products which would also be covered by the HSC NESHAP. The EPA considered both of the above types of continuous web cleaning machines when developing the changes discussed today.

B. How Will These Changes Impact My Continuous Web Cleaning Machines?

The changes will enable you to comply with all of the requirements of the HSC NESHAP. The options are similar to the options for other in-line cleaning machines. The final rule amendments provide for emission controls equivalent to existing requirements codified at 40 CFR part 63, subpart T, and include new equivalent

controls for certain cleaning machines and clarifications of the EPA's interpretation of existing requirements germane to continuous web cleaning machines. The changes account for the inherent differences between the solvent cleaning machines that were the basis for the HSC NESHAP promulgated in 1994 and continuous web cleaning machines. The changes to the rule that apply only to continuous web cleaning machines are:

1. An alternative to the requirement for a maximum parts speed of 11 feet per minute and the requirement for a dwell time in some options. You are not required to meet the speed and dwell time requirements if your continuous web cleaning machine meets other specific requirements. These requirements include a properly designed, operated, and maintained system to eliminate visible carry out of solvent on your continuous web product. In addition, you must comply with the monitoring, recordkeeping, and reporting requirements for the controls that replace the hoist speed and dwell requirements.

2. A change in the alternative for continuous web cleaning machines venting to a carbon adsorber. A properly designed and operated continuous web cleaning machine can comply with the new or existing source requirements by venting the exhaust from the enclosed cleaning chamber through a properly operated and maintained carbon adsorption system instead of one of the equipment combinations listed in the HSC NESHAP. However, the system used must be demonstrated to the Administrator's satisfaction to achieve an overall solvent control efficiency of 70 percent.

3. A clarification that there is no freeboard ratio requirement and freeboard refrigeration device requirement if your continuous web cleaning machine does not have an exposed sump. That is, if your continuous web cleaning machine has a remote reservoir, no freeboard ratio and freeboard refrigeration device requirements apply. Requirements for remote reservoir continuous web cleaning machines have been included in a new paragraph that has been added to § 63.463 of the rule.

4. A clarification that the ban on the cleaning of absorbent materials does not apply to cloth rollers used in the cleaning process inside your machine. However, you do have requirements that apply when you remove these rollers from the machine.

5. A clarification on the interpretation of superheated vapor technology for continuous web cleaning machines. The new interpretation allows for any technology that raises the continuous web part above the boiling point of the solvent. A new term, superheated part technology, has been added to the rule to more clearly address this situation. Therefore, as with the HSC NESHAP promulgated in 1994, your specific compliance options in the amended HSC NESHAP depend on whether your cleaning machines are considered to be new or existing.

C. How Do I Know if My Machine Is a "New" or an "Existing" Continuous Web Cleaning Machine?

Machines are classified as either new or existing based on the date of construction. Continuous web cleaning machines on which construction started before November 29, 1993, the date the HSC NESHAP was proposed, are existing affected sources. Machines upon which construction started on November 29, 1993 or later are new affected sources.

D. When Must I Comply With These New Requirements?

You must comply with these requirements by December 2, 1999 for both your new and existing affected sources. This date was established in a **Federal Register** final rule published on December 11, 1998 (63 FR 68397).

III. Other Changes

A. What Change Is EPA Making That Applies to My Transformer Cleaning Operations?

The EPA has recently become aware of a potential conflict between the HSC NESHAP and some specific Toxic Substances Control Act (TSCA) permits. Some facilities clean transformers contaminated with PCBs using batch cold halogenated solvent cleaning machines. The cleaning of these PCB-laden transformers is covered under TSCA permits, which include requirements to ensure proper draining and proper disposal of all materials. These transformers often include absorbent materials (*i.e.*, cardboard). The HSC NESHAP requirements for cold cleaning machines state that "Sponges, fabric, wood, and paper shall not be cleaned." (§ 63.462(c)(8)).

It is not EPA's intent to prohibit the proper decontamination operation for PCB-laden transformers. The intent of this requirement in the HSC NESHAP is to reduce the amount of solvent loss due to improper cleaning of absorbent materials, such as rags and cloths. The EPA has reviewed the requirements in an example permit of a facility conducting decontamination of these transformers and concluded that TSCA permits should adequately ensure that the intent of the HSC NESHAP is met for these operations. For example, these permits have sufficient requirements for proper draining and disposal of the transformers. Therefore, EPA is adding an exclusion for cleaning absorbent materials in PCB-laden transformers, in compliance with a permit issued under TSCA, in the final rule.

B. What Changes Impact My Steam-Heated Vapor Cleaning Machines?

Steam-heated vapor cleaning machines will no longer be required to have a device that shuts off the sump heat if the liquid level drops to the sump heater coils (§ 63.463(a)(4)). This requirement was included in the HSC NESHAP for all machines. However, since the promulgation of the HSC NESHAP, EPA has determined that this device is not necessary for steam-heated machines because these machines are not able to heat the solvent to a temperature above the decomposition temperatures of any of the regulated halogenated solvents.

IV. Impacts

The changes contained in these final rule amendments are corrections, clarifications, and equivalent compliance alternatives and do not change the intended coverage of the HSC NESHAP (subpart T). These changes will not affect the estimated emission reductions or the control costs for these rules. These clarifications and corrections should make it easier for owners and operators of affected sources, and for local and State authorities, to understand and implement the requirements in subpart T. The equivalent compliance alternatives will make it possible for owners and operators of continuous web cleaning machines to comply with all requirements of subpart T.

V. Administrative Requirements

A. Executive Order 12866: Regulatory Planning and Review

Under Executive Order 12866 (58 FR 51735, October 4, 1993), the EPA must submit significant regulatory actions to the Office of Management and Budget (OMB) for review. The Executive Order defines "significant regulatory action" as one that OMB determines is likely to result in a rule that may:

(1) Have an annual effect on the economy of $100 million or more or adversely affect in a material way the economy, a sector of the economy, productivity, competition, jobs, the environment, public health or safety, or

State, local, or tribal governments or communities;

(2) create a serious inconsistency or otherwise interfere with an action taken or planned by another agency;

(3) materially alter the budgetary impact of entitlements, grants, user fees, or loan programs, or the rights and obligations of recipients thereof; or

(4) raise novel legal or policy issues arising out of legal mandates, the President's priorities, or the principles set forth in the Executive Order.

It has been determined that this final rule does not qualify as a "significant regulatory action" under the terms of Executive Order 12866 and, therefore, is not subject to review by OMB.

B. Executive Order 13132: (Federalism)

Executive Order 13132, entitled Federalism (64 FR 43255, August 10, 1999), requires EPA to develop an accountable process to ensure "meaningful and timely input by State and local officials in the development of regulatory policies that have federalism implications." "Policies that have federalism implications is defined in the Executive Order to include regulations that have substantial direct effects on the States, on the relationship between the national government and the States, or on the distribution of power and responsibilities among the various levels of government." Under Executive Order 13132, EPA may not issue a regulation that has federalism implications, that imposes substantial direct compliance costs, and that is not required by statute, unless the Federal government provides the funds necessary to pay the direct compliance costs incurred by State and local governments, or EPA consults with State and local officials early in the process of developing the proposed regulation. The EPA also may not issue a regulation that has federalism implications and that preempts State law unless the Agency consults with State and local officials early in the process of developing the proposed regulation.

If EPA complies by consulting, Executive Order 13132 requires EPA to provide to OMB, in a separately identified section of the preamble to the rule, a federalism summary impact statement (FSIS). The FSIS must include a description of the extent of EPA's prior consultation with State and local officials, a summary of the nature of their concerns and the Agency's position supporting the need to issue the regulation, and a statement of the extent to which the concerns of State and local officials have been met. Also, when EPA transmits a draft final rule with federalism implications to OMB for review pursuant to Executive Order 12866, EPA must include a certification from the Agency's Federalism Official stating that EPA has met the requirements of Executive Order 13132 in a meaningful and timely manner.

This final rule will not have substantial direct effects on the States, on the relationship between the national government and the States, or on the distribution of power and responsibilities among the various levels of government, as specified in Executive Order 13132. This final rule only provides amendments to ensure that all owners or operators of solvent cleaning machines have appropriate and attainable requirements for their cleaning machines. Thus, the requirements of section 6 of the Executive Order do not apply to this rule.

C. Executive Order 13084: Consultation and Coordination With Indian Tribal Governments

Under Executive Order 13084, the EPA may not issue a regulation that is not required by statute, that significantly or uniquely affects the communities of Indian tribal governments, and that imposes substantial direct compliance costs on those communities unless the Federal government provides the funds necessary to pay the direct compliance costs incurred by the tribal governments or the EPA consults with those governments. If the EPA complies by consulting, Executive Order 13084 requires the EPA to provide to OMB, in a separately identified section of the preamble to the rule, a description of the extent of the EPA's prior consultation with representatives of affected tribal governments, a summary of the nature of their concerns, and a statement supporting the need to issue the regulation. In addition, Executive Order 13084 requires the EPA to develop an effective process permitting elected officials and other representatives of Indian tribal governments "to provide meaningful and timely input in the development of regulatory policies on matters that significantly or uniquely affect their communities."

These final rule amendments do not impose any duties or compliance costs on Indian tribal governments. Further, the final rule amendments provided herein do not significantly alter the control standards imposed by the HSC NESHAP for any source, including any that may affect communities of the Indian tribal governments. Hence, today's final rule amendments do not significantly or uniquely affect the communities of Indian tribal governments. Accordingly, the requirements of section 3(b) of Executive Order 13084 do not apply.

D. Unfunded Mandates Reform Act

Title II of the Unfunded Mandates Reform Act (UMRA) of 1995, Pub. L. No. 104–4, establishes requirements for Federal agencies to assess the effects of their regulatory actions on State, local, and tribal governments and the private sector. Under section 202 of the UMRA, the EPA generally must prepare a written statement, including a cost-benefit analysis, for proposed and final rules with "Federal mandates" that may result in expenditures to State, local, and tribal governments, in the aggregate, or to the private sector, of $100 million or more in any 1 year. Before promulgating an EPA rule for which a written statement is needed, section 205 of the UMRA generally requires the EPA to identify and consider a reasonable number of regulatory alternatives and adopt the least costly, most cost-effective, or least burdensome alternative that achieves the objectives of the rule. The provisions of section 205 do not apply when they are inconsistent with applicable law. Moreover, section 205 allows the EPA to adopt an alternative other than the least costly, most cost-effective, or least burdensome alternative if the Administrator publishes with the final rule an explanation why that alternative was not adopted. Before the EPA establishes any regulatory requirements that may significantly or uniquely affect small governments, including tribal governments, it must have developed under section 203 of the UMRA a small government agency plan. The plan must provide for notifying potentially affected small governments, enabling officials of affected small governments to have meaningful and timely input in the development of the EPA regulatory proposals with significant Federal intergovernmental mandates, and informing, educating, and advising small governments on compliance with the regulatory requirements.

The EPA has determined that these final rule amendments do not include a Federal mandate that may result in estimated costs of $100 million or more to either State, local, or tribal governments in the aggregate or to the private sector in any 1 year, and that these final rule amendments do not significantly or uniquely impact small governments, because they contain no requirements that apply to such governments or impose obligations upon them. The EPA has not prepared

a budgetary impact statement or specifically addressed the selection of the least costly, most cost-effective, or least burdensome alternative. In addition, because small governments will not be significantly or uniquely affected by these final rule amendments, the EPA is not required to develop a plan with regard to small governments. Therefore, the requirements of the UMRA do not apply.

E. Regulatory Flexibility/Small Business Regulatory Enforcement Fairness Act

The Regulatory Flexibility Act of 1980 (5 U.S.C. 601, *et seq.*), as amended by the Small Business Regulatory Enforcement Fairness Act (SBREFA) of 1996, requires the EPA to give special consideration to the effect of Federal regulations on small entities and to consider regulatory options that might mitigate any such impacts. The EPA must prepare a regulatory flexibility analysis unless the EPA certifies that the rule will not have a "significant impact on a substantial number of small entities." Small entities include small businesses, small not-for-profit enterprises, and small government jurisdictions.

These final rule amendments would not have a significant impact on a substantial number of small entities because they clarify and make corrections to the promulgated HSC NESHAP, but impose no additional regulatory requirements on owners or operators of affected sources.

F. Paperwork Reduction Act

The information collection request (ICR) was submitted to the OMB under the *Paperwork Reduction Act* (44 U.S.C. 3501, *et seq.*) at the time this rule was originally promulgated. These final rule amendments to the HSC NESHAP will have no impact on the information collection burden estimates made previously. Therefore, the ICR has not been revised.

G. Executive Order 13045: Protection of Children from Environmental Health Risks and Safety Risks

Executive Order 13045, "Protection of Children from Environmental Health Risks and Safety Risks" (62 FR 19885, April 23, 1997), applies to any rule that (1) is determined to be "economically significant" as defined under Executive Order 12866, and (2) concerns an environmental health or safety risk that the EPA has reason to believe may have a disproportionate effect on children. If the regulatory action meets both criteria, the EPA must evaluate the environmental health or safety effects of the planned rule on children, and explain why the planned regulation is preferable to other potentially effective and reasonably feasible alternatives considered by the EPA.

The EPA interprets Executive Order 13045 as applying only to those regulatory actions that are based on health or safety risks, so that the analysis required under section 5–501 of the Executive Order has the potential to influence the regulation. These final rule amendments are not subject to Executive Order 13045 because they are not an "economically significant" regulatory action as defined by Executive Order 12866 and are based on technology performance rather than health or risks that may disproportionately affect children.

H. Congressional Review Act

The Congressional Review Act, 5 U.S.C. 801, *et seq.*, as added by the SBREFA of 1996, generally provides that before a rule may take effect, the agency promulgating the rule must submit a rule report, which includes a copy of the rule, to each House of the Congress and to the Comptroller General of the United States. The EPA will submit a report containing this direct final rule and other required information to the United States Senate, the United States House of Representatives, and the Comptroller General of the United States prior to publication of this final rule in the **Federal Register**. A major rule cannot take effect until 60 days after it is published in the **Federal Register**. These final amendments are not a "major rule" as defined by 5 U.S.C. 804(2).

I. National Technology Transfer and Advancement Act

Section 12(d) of the National Technology Transfer and Advancement Act (NTTAA) of 1995, Public Law 104–113, Section 12(d) (15 U.S.C. 272 note), directs the EPA to use voluntary consensus standards in its regulatory activities unless to do so would be inconsistent with applicable law or otherwise impractical. Voluntary consensus standards are technical standards (e.g., materials specifications, test methods, sampling procedures, business practices, etc.) that are developed or adopted by one or more voluntary consensus standards bodies. The NTTAA requires the EPA to provide Congress, through OMB, with explanations when the EPA decides not to use available and applicable voluntary consensus standards. This action does not involve the proposal of any new technical standards.

As part of a larger effort, the EPA is undertaking a project to cross-reference existing voluntary consensus standards on testing, sampling, and analysis with current and future EPA test methods. When completed, this project will assist the EPA in identifying potentially applicable voluntary consensus standards which can then be evaluated for equivalency and applicability in determining compliance with future regulations.

List of Subjects in 40 CFR Part 63

Environmental protection, Administrative practice and procedure, Air pollution control, Hazardous substances, Intergovernmental relations, Reporting and recordkeeping requirements.

Dated: November 29, 1999.

Carol M. Browner,

Administrator.

For the reasons set out in the preamble, part 63, title 40, chapter I of the Code of Federal Regulations is amended as follows.

PART 63—[AMENDED]

1. The authority for part 63 continues to read as follows:

Authority: 42 U.S.C. 7401, *et seq.*

Subpart T—National Emission Standards for Halogenated Solvent Cleaning

2. Section 63.461 is amended by adding, in alphabetical order, definitions for "Air knife system," "Combined squeegee and air knife system," "Remote reservoir continuous web cleaning machine," "Squeegee system," and "Superheated part technology," and by revising the definition of "Continuous web cleaning machine" to read as follows:

§ 63.461 Definitions.

* * * * *

Air knife system means a device that directs forced air at high pressure, high volume, or a combination of high pressure and high volume, through a small opening directly at the surface of a continuous web part. The purpose of this system is to remove the solvent film from the surfaces of the continuous web part.

* * * * *

Combined squeegee and air-knife system means a system consisting of a combination of a squeegee system and an air-knife system within a single enclosure.

* * * * *

Continuous web cleaning machine means a solvent cleaning machine in

which parts such as film, coils, wire, and metal strips are cleaned at speeds typically in excess of 11 feet per minute. Parts are generally uncoiled, cleaned such that the same part is simultaneously entering and exiting the solvent application area of the solvent cleaning machine, and then recoiled or cut. For the purposes of this subpart, all continuous web cleaning machines are considered to be a subset of in-line solvent cleaning machines.

* * * * *

Remote reservoir continuous web cleaning machine means a continuous web cleaning machine in which there is no exposed solvent sump. In these units, the solvent is pumped from an enclosed chamber and is typically applied to the continuous web part through a nozzle or series of nozzles. The solvent then drains from the part and is collected and recycled through the machine, allowing no solvent to pool in the work or cleaning area.

* * * * *

Squeegee system means a system that uses a series of pliable surfaces to remove the solvent film from the surfaces of the continuous web part. These pliable surfaces, called squeegees, are typically made of rubber or plastic media, and need to be periodically replaced to ensure continued proper function.

* * * * *

Superheated part technology means a system that is part of the continuous web process that heats the continuous web part either directly or indirectly to a temperature above the boiling point of the cleaning solvent. This could include a process step, such as a tooling die that heats the part as it is processed, as long as the part remains superheated through the cleaning machine.

* * * * *

3. Section 63.462 is amended by revising paragraph (c) introductory text, paragraph (c)(8), and adding paragraph (c)(9) to read as follows:

§ 63.462 Batch cold cleaning machine standards.

* * * * *

(c) Each owner or operator of a batch cold solvent cleaning machine complying with paragraph (a)(2) or (b) of this section shall comply with the work and operational practice requirements specified in paragraphs (c)(1) through (c)(9) of this section as applicable.

* * * * *

(8) Except as provided in paragraph (c)(9) of this section, sponges, fabric, wood, and paper products shall not be cleaned.

(9) The prohibition in paragraph (c)(8) of this section does not apply to the cleaning of porous materials that are part of polychlorinated biphenyl (PCB) laden transformers if those transformers are handled throughout the cleaning process and disposed of in compliance with an approved PCB disposal permit issued in accordance with the Toxic Substances Control Act.

* * * * *

4. Section 63.463 is amended by:

a. Revising paragraph (a) introductory text;

b. Revising paragraph (c) introductory text;

c. Revising paragraph (d) introductory text;

d. Revising paragraph (e) introductory text and paragraph (e)(2) introductory text;

e. Adding paragraphs (e)(2)(viii) through (xi); and

f. Adding paragraphs (g) and (h).

The revisions and additions read as follows:

§ 63.463 Batch vapor and in-line cleaning machine standards.

(a) Except as provided in § 63.464 for all cleaning machines, each owner or operator of a solvent cleaning machine subject to the provisions of this subpart shall ensure that each existing or new batch vapor or in-line solvent cleaning machine subject to the provisions of this subpart conforms to the design requirements specified in paragraphs (a)(1) through (7) of this section. The owner or operator of a continuous web cleaning machine shall comply with the requirements of paragraph (g) or (h) of this section, as appropriate, in lieu of complying with this paragraph.

* * * * *

(c) Except as provided in § 63.464 for all cleaning machines, each owner or operator of an in-line cleaning machine shall comply with paragraph (c)(1) or (2) of this section as appropriate. The owner or operator of a continuous web cleaning machine shall comply with the requirements of paragraph (g) or (h) of this section, as appropriate, in lieu of complying with this paragraph.

* * * * *

(d) Except as provided in § 63.464 for all cleaning machines, each owner or operator of an existing or new batch vapor or in-line solvent cleaning machine shall meet all of the following required work and operational practices specified in paragraphs (d)(1) through (12) of this section as applicable. The owner or operator of a continuous web cleaning machine shall comply with the requirements of paragraph (g) or (h) of this section, as appropriate, in lieu of complying with this paragraph.

* * * * *

(e) Each owner or operator of a solvent cleaning machine complying with paragraph (b), (c), or (g) of this section shall comply with the requirements specified in paragraphs (e)(1) through (4) of this section.

* * * * *

(2) Determine during each monitoring period whether each control device used to comply with these standards meets the requirements specified in paragraphs (e)(2)(i) through (xi) of this section.

* * * * *

(viii) If a superheated part system is used to comply with the standards for continuous web cleaning machines in paragraph (g) of this section, the owner or operator shall ensure that the temperature of the continuous web part is at least 10 degrees Fahrenheit above the solvent boiling point while the part is traveling through the cleaning machine.

(ix) If a squeegee system is used to comply with the continuous web cleaning requirements of paragraph (g)(3)(iii) of this section, the owner or operator shall comply with the following requirements.

(A) Determine the appropriate maximum product throughput for the squeegees used in the squeegee system, as described in § 63.465(f).

(B) Conduct the weekly monitoring required by § 63.466(a)(3). Record both the results of the visual inspection and the length of continuous web product cleaned during the previous week.

(C) Calculate the total amount of continuous web product processed since the squeegees were replaced and compare to the maximum product throughput for the squeegees.

(D) Ensure squeegees are replaced at or before the maximum product throughput is attained.

(E) Redetermine the maximum product throughput for the squeegees if any solvent film is visible on the continuous web part immediately after it exits the cleaning machine.

(x) If an air knife system is used to comply with the continuous web cleaning requirements of paragraph (g)(3)(iii) of this section, the owner or operator shall comply with the following requirements.

(A) Determine the air knife parameter and parameter value that demonstrate to the Administrator's satisfaction that the air knife is properly operating. An air knife is properly operating if no visible solvent film remains on the continuous web part after it exits the cleaning machine.

(B) Maintain the selected air knife parameter value at the level determined in paragraph (a) of this section.

(C) Conduct the weekly monitoring required by § 63.466(a)(3).

(D) Redetermine the proper air knife parameter value if any solvent film is visible on the continuous web part immediately after it exits the cleaning machine.

(xi) If a combination squeegee and air knife system is used to comply with the continuous web cleaning requirements of paragraph (g)(3)(iii) of this section, the owner or operator shall comply with the following requirements.

(A) Determine the system parameter and value that demonstrate to the Administrator's satisfaction that the system is properly operating.

(B) Maintain the selected parameter value at the level determined in paragraph (a) of this section.

(C) Conduct the weekly monitoring required by § 63.466(a)(3).

(D) Redetermine the proper parameter value if any solvent film is visible on the continuous web part immediately after it exits the cleaning machine.

* * * * *

(g) Except as provided in § 63.464 and in paragraph (h) of this section for remote reservoir continuous web cleaning machines, each owner or operator of a continuous web cleaning machine shall comply with paragraphs (g)(1) through (4) of this section for each continuous web cleaning machine.

(1) Except as provided in paragraph (g)(2) of this section, install, maintain, and operate one of the following control combinations on each continuous web cleaning machine.

(i) For each existing continuous web cleaning machine, the following control combinations are allowed:

(A) Superheated vapor or superheated part technology, and a freeboard ratio of 1.0 or greater.

(B) Freeboard refrigeration device and a freeboard ratio of 1.0 or greater.

(C) Carbon adsorption system meeting the requirements of paragraph (e)(2)(vii) of this section.

(ii) For each new continuous web cleaning machine, the following control combinations are allowed:

(A) Superheated vapor or superheated part technology, and a freeboard refrigeration device.

(B) A freeboard refrigeration device and a carbon adsorber meeting the requirements of paragraph (e)(2)(vii) of this section.

(C) Superheated vapor or superheated part technology, and a carbon adsorber meeting the requirements of paragraph (e)(2)(vii) of this section.

(2) If a carbon adsorber system can be demonstrated to the Administrator's satisfaction to have an overall solvent control efficiency (*i.e.*, capture efficiency removal efficiency) of 70 percent or greater, this system is equivalent to the options in paragraph (g) of this section.

(3) In lieu of complying with the provisions of paragraph (a) of this section, the owner or operator of a continuous web cleaning machine shall comply with the following provisions:

(i) Each cleaning machine shall meet one of the following control equipment or technique requirements:

(A) An idling and downtime mode cover, as described in paragraph (d)(1)(i) of this section, that may be readily opened or closed; that completely covers the cleaning machine openings when in place; and is free of cracks, holes, and other defects. A continuous web part that completely occupies an entry or exit port when the machine is idle is considered to meet this requirement.

(B) A reduced room draft as described in paragraph (e)(2)(ii) of this section.

(C) Gasketed or leakproof doors that separate both the continuous web part feed reel and take-up reel from the room atmosphere if the doors are checked according to the requirements of paragraph (e)(2)(iii) of this section.

(D) A cleaning machine that is demonstrated to the Administrator's satisfaction to be under negative pressure during idling and downtime and is vented to a carbon adsorption system that meets the requirements of either paragraph (e)(2)(vii) of this section or paragraph (g)(2) of this section.

(ii) Each continuous web cleaning machine shall have a freeboard ratio of 0.75 or greater unless that cleaning machine is a remote reservoir continuous web cleaning machine.

(iii) Each cleaning machine shall have an automated parts handling system capable of moving parts or parts baskets at a speed of 3.4 meters per minute (11 feet per minute) or less from the initial loading of parts through removal of cleaned parts, unless the cleaning machine is a continuous web cleaning machine that has a squeegee system or air knife system installed, maintained, and operated on the continuous web cleaning machine meeting the requirements of paragraph (e) of this section.

(iv) Each vapor cleaning machine shall be equipped with a device that shuts off the sump heat if the sump liquid solvent level drops to the sump heater coils.

(v) Each vapor cleaning machine shall be equipped with a vapor level control device that shuts off sump heat if the vapor level in the vapor cleaning machine rises above the height of the primary condenser.

(vi) Each vapor cleaning machine shall have a primary condenser.

(vii) Each cleaning machine that uses an exhaust shall be designed and operated to route all collected solvent vapors through a properly operated and maintained carbon adsorber that meets the requirements of paragraph (e)(2)(ii) of this section.

(4) In lieu of complying with the provisions of paragraph (d) of this section, the owner or operator of a continuous web cleaning machine shall comply with the following provisions:

(i) Control air disturbances across the cleaning machine opening(s) by incorporating one of the following control equipment or techniques:

(A) Cover(s) to each solvent cleaning machine shall be in place during the idling mode and during the downtime mode unless either the solvent has been removed from the machine or maintenance or monitoring is being performed that requires the cover(s) in place. A continuous web part that completely occupies an entry or exit port when the machine is idle is considered to meet this requirement.

(B) A reduced room draft as described in paragraph (e)(2)(ii) of this section.

(C) Gasketed or leakproof doors or covers that separate both the continuous web part feed reel and take-up reel from the room atmosphere if the doors are checked according to the requirements of paragraph (e)(2)(iii) of this section.

(D) A cleaning machine that is demonstrated to the Administrator's satisfaction to be under negative pressure during idling and downtime and is vented to a carbon adsorption system that meets either the requirements of paragraph (e)(2)(vii) of this section or paragraph (g)(2) of this section.

(ii) Any spraying operations shall be conducted in a section of the solvent cleaning machine that is not directly exposed to the ambient air (*i.e.*, a baffled or enclosed area of the solvent cleaning machine) or within a machine having a door or cover that meets the requirements of paragraph (g)(4)(i)(C) of this section.

(iii) During startup of each vapor cleaning machine, the primary condenser shall be turned on before the sump heater.

(iv) During shutdown of each vapor cleaning machine, the sump heater shall be turned off and the solvent vapor layer

allowed to collapse before the primary condenser is turned off.

(v) When solvent is added or drained from any solvent cleaning machine, the solvent shall be transferred using threaded or other leakproof couplings, and the end of the pipe in the solvent sump shall be located beneath the liquid solvent surface.

(vi) Each solvent cleaning machine and associated controls shall be maintained as recommended by the manufacturers of the equipment or using alternative maintenance practices that have been demonstrated to the Administrator's satisfaction to achieve the same or better results as those recommended by the manufacturer.

(vii) Waste solvent, still bottoms, sump bottoms, and waste absorbent materials used in the cleaning process for continuous web cleaning machines shall be collected and stored in waste containers. The closed containers may contain a device that would allow pressure relief, but would not allow liquid solvent to drain from the container.

(viii) Except as provided in paragraph (g)(4)(ix) of this section, sponges, fabric, wood, and paper products shall not be cleaned.

(ix) The prohibition in paragraph (g)(4)(viii) of this section does not apply to absorbent materials that are used as part of the cleaning process of continuous web cleaning machines, including rollers and roller covers.

(h) Except as provided in § 63.464, each owner or operator of a remote reservoir continuous web cleaning machine shall comply with paragraphs (h)(1) through (4) of this section.

(1) Except as provided in paragraph (h)(2) of this section, install, maintain, and operate one of the following controls on each new remote reservoir continuous web cleaning machine.

(i) Superheated vapor or superheated part technology.

(ii) A carbon adsorber meeting the requirements of paragraph (e)(2)(vii) of this section.

(iii) If a carbon adsorber system can be demonstrated to the Administrator's satisfaction to have an overall solvent control efficiency (*i.e.*, capture efficiency removal efficiency) of 70 percent or greater, this system is equivalent to the options in paragraphs (h)(1)(i) and (h)(1)(ii) of this section.

(2) In lieu of complying with the provisions of paragraph (a) of this section, the owner or operator of a remote reservoir continuous web cleaning machine shall comply with the following provisions:

(i) Each cleaning machine shall have an automated parts handling system capable of moving parts or parts baskets at a speed of 3.4 meters per minute (11 feet per minute) or less from the initial loading of parts through removal of cleaned parts, unless the cleaning machine is a continuous web cleaning machine that has a squeegee system or air knife system installed, maintained, and operated on the continuous web cleaning machine meeting the requirements of paragraph (e) of this section.

(ii) Each vapor cleaning machine shall be equipped with a device that shuts off the sump heat if the sump liquid solvent level drops to the sump heater coils.

(iii) Each vapor cleaning machine shall be equipped with a vapor level control device that shuts off sump heat if the vapor level in the vapor cleaning machine rises above the height of the primary condenser.

(iv) Each vapor cleaning machine shall have a primary condenser.

(v) Each cleaning machine that uses an exhaust shall be designed and operated to route all collected solvent vapors through a properly operated and maintained carbon adsorber that meets the requirements of either paragraph (e)(2)(vii) of this section or paragraph (g)(2) of this section.

(3) In lieu of complying with the provisions of paragraph (d) of this section, the owner or operator of a remote reservoir continuous web cleaning machine shall comply with the following provisions:

(i) Any spraying operations shall be conducted in a section of the solvent cleaning machine that is not directly exposed to the ambient air (*i.e.*, a baffled or enclosed area of the solvent cleaning machine) or within a machine having a door or cover that meets the requirements of paragraph (g)(4)(i)(C) of this section.

(ii) During startup of each vapor cleaning machine, the primary condenser shall be turned on before the sump heater.

(iii) During shutdown of each vapor cleaning machine, the sump heater shall be turned off and the solvent vapor layer allowed to collapse before the primary condenser is turned off.

(iv) When solvent is added or drained from any solvent cleaning machine, the solvent shall be transferred using threaded or other leakproof couplings, and the end of the pipe in the solvent sump shall be located beneath the liquid solvent surface.

(v) Each solvent cleaning machine and associated controls shall be maintained as recommended by the manufacturers of the equipment or using alternative maintenance practices that have been demonstrated to the Administrator's satisfaction to achieve the same or better results as those recommended by the manufacturer.

(vi) Waste solvent, still bottoms, sump bottoms, and waste absorbent materials used in the cleaning process for continuous web cleaning machines shall be collected and stored in waste containers. The closed containers may contain a device that would allow pressure relief, but would not allow liquid solvent to drain from the container.

(vii) Except as provided in paragraph (h)(3)(viii) of this section, sponges, fabric, wood, and paper products shall not be cleaned.

(viii) The prohibition in paragraph (h)(3)(vii) of this section does not apply to absorbent materials that are used as part of the cleaning process of continuous web cleaning machines, including rollers and roller covers.

5. Section 63.464 is amended by adding paragraph (d) to read as follows:

§ 63.464 Alternative Standards.

* * * * *

(d) As an alternative to meeting the requirements in § 63.463, each owner or operator of a continuous web cleaning machine can demonstrate an overall cleaning system control efficiency of 70 percent using the procedures in § 63.465(g).

6. Section 63.465 is amended by:

a. Revising paragraph (a);

b. Revising paragraph (b);

c. Revising paragraph (c) introductory text; and

d. Adding paragraphs (f), (g) and (h).

The revisions and additions read as follows:

§ 63.465 Test methods.

* * * * *

(a) Except as provided in paragraphs (f) and (g) of this section for continuous web cleaning machines, each owner or operator of a batch vapor or in-line solvent cleaning machine complying with an idling emission limit standard in § 63.463(b)(1)(ii), (b)(2)(ii), (c)(1)(ii), or (c)(2)(ii) shall determine the idling emission rate of the solvent cleaning machine using Reference Method 307 in appendix A of this part.

(b) Except as provided in paragraphs (f) and (g) of this section for continuous web cleaning machines, each owner or operator of a batch vapor or in-line solvent cleaning machine complying with § 63.464 shall, on the first operating day of every month, ensure that the solvent cleaning machine system contains only clean liquid solvent. This includes, but is not limited to, fresh unused solvent, recycled solvent and used solvent that has been

cleaned of soils. A fill-line must be indicated during the first month the measurements are made. The solvent level within the machine must be returned to the same fill-line each month, immediately prior to calculating monthly emissions as specified in paragraph (c) of this section. The solvent cleaning machine does not have to be emptied and filled with fresh unused solvent prior to the calculations.

(c) Except as provided in paragraphs (f) and (g) of this section for continuous web cleaning machines, each owner or operator of a batch vapor or in-line solvent cleaning machine complying with § 63.464 shall, on the first operating day of the month, comply with the requirements specified in paragraphs (c)(1) through (3) of this section.

* * * * *

(f) Each owner or operator of a continuous web cleaning machine using a squeegee system to comply with § 63.463(g)(3) shall determine the maximum product throughput using the method in this paragraph. The maximum product throughput for each squeegee type used at a facility must be determined prior to December 2, 1999, the compliance date for these units.

(1) Conduct daily visual inspections of the continuous web part. This monitoring shall be conducted at the point where the continuous web part exits the squeegee system. It is not necessary for the squeegees to be new at the time monitoring is begun if the following two conditions are met:

(i) The continuous web part leaving the squeegee system has no visible solvent film.

(ii) The amount of continuous web that has been processed through the squeegees since the last replacement is known.

(2) Continue daily monitoring until a visible solvent film is noted on the continuous web part.

(3) Determine the length of continuous web product that has been cleaned using the squeegee since it was installed.

(4) The maximum product throughput for the purposes of this rule is equal to the time it takes to clean 95 percent of the length of product determined in paragraph (f)(3) of this section. This time period, in days, may vary depending on the amount of continuous web product cleaned each day.

(g) Each owner or operator of a continuous web cleaning machine demonstrating compliance with the alternative standard of § 63.464(d) shall, on the first day of every month, ensure that the solvent cleaning machine contains only clean liquid solvent. This includes, but is not limited to, fresh unused solvent, recycled solvent, and used solvent that has been cleaned of soils. A fill-line must be indicated during the first month the measurements are made. The solvent level with the machine must be returned to the same fill-line each month, immediately prior to calculating overall cleaning system control efficiency emissions as specified in paragraph (h) in this section. The solvent cleaning machine does not need to be emptied and filled with fresh unused solvent prior to the calculation.

(h) Each owner or operator of a continuous web cleaning machines complying with § 63.464(d) shall, on the first operating day of the month, comply with the following requirements.

(1) Using the records of all solvent additions, solvent deletions, and solvent recovered for the previous monthly reporting period required under § 63.467(e), determine overall cleaning system control efficiency (Eo) using Equation 8 as follows:

$$E_O = R_i / \left(R_i + \left(Sa_i - SSR_i\right)\right) \qquad \text{(Eq. 8)}$$

Where:

E_o = overall cleaning system control efficiency

R_i = the total amount of halogenated HAP liquid solvent recycled to the solvent cleaning machine during the most recent monthly reporting period i, (kilograms of solvent per month).

Sa_i = the total amount of halogenated HAP liquid solvent added to the solvent cleaning machine during the most recent monthly reporting period i, (kilograms of solvent per month).

SSR_i = the total amount of halogenated HAP solvent removed from the solvent cleaning machine in solid waste, obtained as described in paragraph (c)(2) of this section, during the most recent monthly reporting period i, (kilograms of solvent per month).

7. Section 63.466 is amended by revising paragraph (a) introductory text and adding paragraphs (a)(3) through (5) to read as follows:

§ 63.466 Monitoring procedures.

(a) Except as provided in paragraph (g) of this section, each owner or operator of a batch vapor or in-line solvent cleaning machine complying with the equipment standards in § 63.463(b)(1)(i), (b)(2)(i), (c)(1)(i), (c)(2)(i), (g)(1), or (g)(2) shall conduct monitoring and record the results on a weekly basis for the control devices, as appropriate, specified in paragraphs (a)(1) through (5) of this section.

* * * * *

(3) If a squeegee system, air knife system, or combination squeegee and air knife system is used to comply with the requirements of § 63.463(g) or (h), the owner or operator shall visually inspect the continuous web part exiting the solvent cleaning machine to ensure that no solvent film is visible on the part.

(4) Except as provided in paragraph (a)(5) of this section, if a superheated part system is used to comply with the requirements of § 63.463(g) or (h), the owner or operator shall use a thermometer, thermocouple, or other temperature measurement device to measure the temperature of the continuous web part while it is in the solvent cleaning machine. This measurement can also be taken at the exit of the solvent cleaning machine.

(5) As an alternative to complying with paragraph (a)(4) of this section, the owner or operator can provide data, sufficient to satisfy the Administrator, that demonstrate that the part temperature remains above the boiling point of the solvent at all times that the part is within the continuous web solvent cleaning machine. This data could include design and operating conditions such as information supporting any exothermic reaction inherent in the processing.

* * * * *

8. Section 63.467 is amended by revising paragraph (a) introductory text, paragraph (c) introductory text and by adding paragraph (a)(6), paragraph (a)(7) and paragraph (e) to read as follows:

§ 63.467 Recordkeeping requirements.

(a) Each owner or operator of a batch vapor or in-line solvent cleaning machine complying with the provisions of § 63.463 shall maintain records in written or electronic form specified in paragraphs (a)(1) through (7) of this section for the lifetime of the machine.

* * * * *

(6) If a squeegee system is used to comply with these standards, records of the test required by § 63.466(f) to determine the maximum product throughput for the squeegees.

(7) If an air knife system or a combination squeegee and air knife system is used to comply with these standards, records of the determination of the proper operating parameter and parameter value for the air knife system.

* * * * *

(c) Except as provided in paragraph (e) of this section for continuous web cleaning machines, each owner or operator of a batch vapor or in-line

solvent cleaning machine complying with the provisions of § 63.464 shall maintain records specified in paragraphs (c)(1) through (3) of this section either in electronic or written form for a period of 5 years.

* * * * *

(e) Each owner or operator of a continuous web cleaning machine complying with the provisions of § 63.464(d) shall maintain the following records in either electronic or written form for a period of 5 years.

(1) The dates and amounts of solvent that are added to the solvent cleaning machine.

(2) The dates and amounts of solvent that are recovered from the desorption of the carbon adsorber system.

(3) The solvent composition of wastes removed from each cleaning machine as determined using the procedures in § 63.465(c)(2).

(4) Calculation sheets showing the calculation and results of determining the overall cleaning system control efficiency, as required by § 63.465.

[FR Doc. 99–31356 Filed 12–2–99; 8:45 am]

BILLING CODE 6560–50–P

Corrections

Federal Register
Vol. 64, No. 245
Wednesday, December 22, 1999

This section of the FEDERAL REGISTER contains editorial corrections of previously published Presidential, Rule, Proposed Rule, and Notice documents. These corrections are prepared by the Office of the Federal Register. Agency prepared corrections are issued as signed documents and appear in the appropriate document categories elsewhere in the issue.

DEPARTMENT OF ENERGY

Federal Energy Regulatory Commission

[Docket No. CP00-6-000]

Gulfstream Natural Gas System, L.L.C; Notice of Intent To Prepare an Environmental Impact Statement for the Proposed Gulfstream Pipeline Project, Request for comments on Environmental issues, and Notice of Public Scoping Meetings and Site Visit

Correction

In notice document 99–32008 beginning on page 69253 in the issue of Friday, December 10, 1999, make the following corrections:

1. On page 69253, in the first column, the subagency name should appear as noted above.

2. On the same page, in the same column, the docket line should appear as noted above.

[FR Doc. C9–32008 Filed 12–21–99; 8:45 am]

BILLING CODE 1505–01–D

ENVIRONMENTAL PROTECTION AGENCY

40 CFR Part 63

[AD-FRL-6478-8]

RIN 2060-AG91

National Emission Standards for Hazardous Air Pollutants: Generic Maximum Achievable Control Technology (Generic MACT)

Correction

In rule document 99–30229, beginning on page 63702, in the issue of Monday, November 22, 1999, make the following correction:

Table 5. To § 63.1103(d)-[Corrected]

On page 63707, in Table 5 to § 631103(d), in the second column, in the first line "≥5" should be added after "contacts".

[FR Doc. C9–30229 Filed 12–21–99; 8:45 am]

BILLING CODE 1505–01–D

SECURITIES AND EXCHANGE COMMISSON

[Release No. 34-42189; File No. SR-CHX-99-12]

Self-Regulatory Organizations; Order Approving Proposed Rule Change by the Chicago Stock Exchange, Inc. To Modify the Recommended Fine Schedule for the Submission of Late Financial and Operational Reports

Correction

In notice document 99–31786, beginning on page 68709, in the issue of Wednesday, December 8, 1999, make the following correction:

On page 68710, in the first column, under the heading **III Discussion** , in the first line, remove the number "1" before the word "After".

[FR Doc. C9–31786 Filed 12–21–99; 8:45 am]

BILLING CODE 1505–01–D

SECURITIES AND EXCHANGE COMMISSION

[Release No. 34-42195; File No. SR-OCC-99-09]

Self-Regulatory Organizations the Options Clearing Corporation; Notice of Filing of Proposed Rule Change to Amend OCC's By-Laws and Rules to Merge the Currently Separated Equity and Non-Equity Elements of the OCC's Clearing Fund

December 1, 1999.

Correction

In notice document 99–31785, beginning on page 68712, in the issue of Wednesday, December 8, 1999, make the following correction:

On page 68712, in the first column, the date line is added to read as set forth above.

[FR Doc. C9–31785 Filed 12–21–99; 8:45 am]

BILLING CODE 1505–01–D

ENVIRONMENTAL PROTECTION AGENCY

40 CFR Part 63

[FRL–6513–4]

RIN 2060–AE36

National Emission Standards for Hazardous Air Pollutants for Amino/Phenolic Resins Production

AGENCY: Environmental Protection Agency (EPA).

ACTION: Final rule.

SUMMARY: This action promulgates national emission standards for hazardous air pollutants (NESHAP) to reduce emissions of hazardous air pollutants (HAPs) from existing and new facilities that manufacture amino or phenolic resins. The EPA has identified these facilities as major sources of HAPs emissions. These final standards are estimated to reduce organic HAP emissions from major existing sources by 361 tons per year, representing a 51 percent reduction from baseline emissions. This estimate is presented for 40 major existing facilities only, since no new facilities are projected to be constructed in the next three years. The major HAPs emitted by sources covered by the final rule include formaldehyde, methanol, phenol, xylene, and toluene. This rule implements section 112(d) of the Clean Air Act Amendments of 1990 (CAA) and is based on the Administrator's determination that the Amino/Phenolic Resins Production source category emits HAPs identified on the list of HAPs in CAA section 112(b). The emissions reductions achieved by these standards, when combined with the emissions reductions achieved by other similar standards, will provide protection to the public and achieve a primary goal of the CAA.

This action also announces a final change to the source category list to combine the Amino Resins and Phenolic Resins source categories into one category: the Amino/Phenolic Resins Production source category.

EFFECTIVE DATE: January 20, 2000. See the **SUPPLEMENTARY INFORMATION** section concerning judicial review.

ADDRESSES: *Docket.* Docket No. A–92–19 contains supporting information used in developing the standards and is located at the U.S. Environmental Protection Agency, 401 M Street SW, Washington, D.C. 20460 in Room M–1500, Waterside Mall (ground floor), and may be inspected from 8:30 a.m. to 5:30 p.m., Monday through Friday, excluding legal holidays.

Background Information Document. The background information document (BID) containing a summary of all the public comments received on the proposed rule and the Administrator's responses to comments may be obtained from the docket for this rule or through the Internet at http://www.epa.gov/ttn/oarpg, or from the U.S. Environmental Protection Agency Library (MD–35), Research Triangle Park, North Carolina 27711, telephone (919) 541–2777. The responses provided in section VII of this preamble to significant comments received on the rule are abbreviated. A full discussion of the comments and our responses to them can be found in the BID.

FOR FURTHER INFORMATION CONTACT: For information concerning this rule, contact Mr. John Schaefer, US EPA, Office of Air Quality Planning and Standards, Research Triangle Park, NC 27711, telephone (919) 541–0296, e-mail: schaefer.john@epa.gov. For information concerning applicability and rule determinations, contact your State or local representative or the appropriate EPA Regional Office representatives.

SUPPLEMENTARY INFORMATION:

Docket. The docket is an organized and complete file of all the information considered by the EPA in the development of this rulemaking. The docket is a dynamic file because material is added throughout the rulemaking process. The docketing system is intended to allow members of the public and industries involved to readily identify and locate documents so that they can effectively participate in the rulemaking process. Along with the proposed and promulgated standards and their preambles, the contents of the docket will serve as the record in case of judicial review. (See section 307(d)(7)(A) of the CAA.) The regulatory text and other materials related to this rulemaking are available for review in the docket or copies may be mailed on request from the Air Docket by calling (202) 260–7548. A reasonable fee may be charged for copying docket materials.

Technology Transfer Network. In addition to being available in the docket, an electronic copy of today's final rule is also available through the Technology Transfer Network (TTN). Following signature, a copy of the rule will be posted on the TTN's policy and guidance page for newly proposed or promulgated rules via the internet at http://www.epa.gov/ttn/oarpg. The TTN provides information and technology exchange in various areas of air pollution control. If more information regarding the TTN is needed, call the TTN Help Line at (919) 541–5384.

EPA Regional Offices

Director, Office of Environmental Stewardship, Attn: Air Compliance Clerk, U.S. EPA Region I, 1 Congress Street, Suite 1100 (SEA), Boston, MA 02114–2023, (617) 918–1740

Umesh Dholakia, U.S. EPA Region II, 290 Broadway Street, New York, NY, 10007–1866, (212) 637–4023

Dianne Walker, U.S. EPA Region III, 1650 Arch Street, Philadelphia, PA 19103, (215) 814–3297

Lee Page, U.S. EPA Region IV, Atlanta Federal Center, 61 Forsyth Street, SW, Atlanta, GA 30303–3104, (404) 562–9131

Bruce Varner, U.S. EPA Region V, 77 West Jackson Boulevard, Chicago, IL 60604–3507, (312) 886–6793

Jim Yang (6EN–AT), U.S. EPA Region VI, First Interstate Bank Tower, 1445 Ross Avenue, Suite 1200, Dallas, TX 75202, (214) 665–7578

Gary Schlicht, U.S. EPA Region VII, 726 Minnesota Avenue, Kansas City, KS 66101, (913) 551–7097

Tami Thomas-Burton, U.S. EPA Region VIII, 999 18th Street, Suite 500, Denver, CO 80202, (303) 312–6581

Ken Bigos, U.S. EPA Region IX, 75 Hawthorne Street, San Francisco, CA 94105, (415) 744–1200

Dan Meyer, U.S. EPA Region X, 1200 Sixth Street, Seattle, WA 98101, (206) 553–4150

Regulated Entities. Categories and entities potentially regulated by this action include:

Category	Standard Industrial Classification (SIC) codes	North American Classification System (NAICS) codes	Examples of regulated entities
Industry	Typically, 2821	Typically, 325211	Facilities which manufacture amino/phenolic resins.

This table is not intended to be exhaustive, but rather provides a guide for readers regarding entities likely to be regulated by this action. To determine whether your facility is regulated by this action, you should examine the

applicability criteria in section 63.1400 of 40 CFR part 63. If you have questions regarding the applicability of this action to a particular entity, consult the persons listed in the preceding **SUPPLEMENTARY INFORMATION** section.

Judicial Review. Under section 307(b)(1) of the CAA, judicial review of this rule is available only by filing a petition for review in the United States Court of Appeals for the District of Columbia Circuit by March 20, 2000. Under section 307(b)(2) of the CAA, the requirements established by today's promulgated rule may not be challenged later in any civil or criminal proceedings brought by EPA to enforce these requirements.

Outline. The information presented in this preamble is organized as follows:

I. What is the Subject and Purpose of This Rule?
II. Does This Rule Apply to Me?
III. What Procedures Did We Follow To Develop the Rule?
A. Source of Authority and Criteria for NESHAPs Development
B. Regulatory Background
IV. What Are the Requirements of the Rule?
A. Summary of the Standards
B. Compliance and Performance Test Provisions
C. Monitoring Requirements
D. Recordkeeping and Reporting Requirements
V. What Did We Consider in Developing the Rule?
A. Relationship to Other Rules
B. Stakeholder and Public Participation
VI. What Are the Impacts of the Standards?
A. Primary Air Impacts
B. Non-Air Environmental Impacts
C. Energy Impacts
D. Cost Impacts
E. Economic Impacts
VII. What Significant Comments Did We Consider and What Major Changes Did We Make to the Proposed Standards?
VIII. What Are the Administrative Requirements of the Rule?
A. Executive Order 12866
B. Executive Order 13084
C. Executive Order 13045
D. Executive Order 13132
E. Unfunded Mandates Reform Act
F. Regulatory Flexibility
G. Paperwork Reduction Act
H. National Technology Transfer and Advancement Act
I. Congressional Review Act

I. What is the Subject and Purpose of This Rule?

On July 16, 1992 (57 FR 31576), we published an initial list of major and area source categories to be regulated for emissions of HAPs. The Amino Resins Production and Phenolic Resins Production source categories were recorded separately on that initial list.

As we discussed in the proposal preamble (63 FR 68833), the manufacturing processes, the emission characteristics, and applicable control technologies for facilities in these two source categories are similar. Also, commenters on the proposed rule generally agreed that these two source categories should be regulated as one category. Based on these factors, we are announcing the final action to revise the source category list, published under section 112(c) of the CAA, to combine the Amino Resins Production and the Phenolic Resins Production source categories into a new category called "Amino/Phenolic Resins Production."

This rule protects air quality and promotes the public health by reducing emissions of some of the HAPs listed in section 112(b)(1) of the CAA. The HAPs emitted by amino/phenolic resin facilities include formaldehyde, methanol, phenol, toluene, and xylene. Exposure to these compounds at certain levels has been demonstrated to cause adverse health effects, including chronic health disorders (*e.g.*, cancer, aplastic anemia, pulmonary (lung) structural changes), acute health disorders (*e.g.*, dyspnea (difficulty in breathing)), and neurotoxic effects.

Formaldehyde is the only HAP associated with this source category that has been classified as a probable human carcinogen (Group B1). Both acute (short-term) and chronic (long-term) exposure to formaldehyde irritates the eyes, nose, and throat, and may cause coughing, chest pains, and bronchitis. Reproductive effects, such as menstrual disorders and pregnancy problems, have been reported in female workers exposed to formaldehyde. Limited human studies have reported an association between formaldehyde exposure and lung and nasopharyngeal cancer. Animal inhalation studies have reported an increased incidence of nasal squamous cell cancer.

Short-term exposure to methanol by humans through inhalation or ingestion may result in visual disturbances such as blurred or dim vision, leading to blindness. Damage to the nervous system, including permanent motor dysfunction, may also result. Long-term inhalation or oral exposure to methanol may cause conjunctivitis, headache, giddiness, insomnia, gastric disturbances, visual disturbances, and blindness in humans. No information is available on the reproductive or developmental effects of methanol in humans. Birth defects have been observed in the offspring of rats exposed to methanol by inhalation.

Inhalation and dermal exposure to phenol is highly irritating to the skin, eyes, and mucous membranes in humans. Oral exposure to phenol may cause muscle weakness and tremors, loss of coordination, paralysis, convulsions, coma, and respiratory arrest. Limited studies on chronic inhalation exposure to phenol in humans have reported liver injury and effects on the heart. No studies of developmental or reproductive effects of phenol in humans are available, but animal studies have reported reduced fetal body weights, growth retardation, and abnormal development in the offspring of animals exposed to phenol by the oral route.

Short-term inhalation of mixed xylenes (a mixture of three closely-related compounds) in humans may cause irritation of the nose and throat, nausea, vomiting, gastric irritation, mild transient eye irritation, and neurological effects. Long-term inhalation of xylenes in humans may result in nervous system effects such as headache, dizziness, fatigue, tremors, and incoordination. Other reported effects include labored breathing, heart palpitation, severe chest pain, abnormal electrocardiograms, and possible effects on the blood and kidneys.

Acute inhalation of toluene by humans may cause effects to the central nervous system (CNS), such as fatigue, sleepiness, headache, nausea, and irregular heartbeat. Adverse CNS effects have been reported in chronic abusers exposed to high levels of toluene. Symptoms include tremors, decreased brain size, involuntary eye movements, and impaired speech, hearing, and vision. Chronic inhalation exposure by humans to lower levels of toluene also causes irritation of the upper respiratory tract, eye irritation, sore throat, nausea, dizziness, headaches, and difficulty with sleep. Studies of children of pregnant women exposed by inhalation to toluene or to mixed solvents have reported CNS problems, facial and limb abnormalities, and delayed development. However, these effects may not be attributable to toluene alone.

As stated in the proposal preamble, we do not have the type of current detailed data on each of the amino/phenolic resin facilities covered by the rule, and the people living around the facilities, that would be necessary to conduct an analysis to determine the actual population exposures to the HAPs emitted from these facilities and potential for resultant health effects.

II. Does This Rule Apply to Me?

This rule applies to you if you own or operate a amino/phenolic resins production unit that is located at a facility that is a major source of HAPs emissions. You do not have to comply with the rule if your facility is a non-

major (area) source. If your facility is a major source under this rule, each group of one or more amino/phenolic resin process units (APPU), plus heat exchange systems and equipment used to comply with the rule such as control and recovery devices, are subject to the rule. Each group of one or more APPU and associated equipment is known as the affected source. You are required to meet the standards for organic HAPs emissions from the following emission points at affected sources: storage vessels, continuous process vents, batch process vents (reactor and non-reactor), heat exchange systems, and equipment leaks. These standards apply to existing and new affected sources.

III. What Procedures Did We Follow To Develop the Rule?

A. Source of Authority and Criteria for NESHAPs Development

Section 112 of the CAA gives us the authority to establish national standards to reduce air emissions from major sources that emit one or more HAPs. Section 112(b) of the CAA lists 188 chemicals, compounds, or groups of chemicals as HAPs. This rule implements section 112(d) of the Act, which requires us to regulate sources of HAPs listed in section 112(b) of the CAA.

Section 112(a)(1) of the CAA defines a major source as:

> * * * any stationary source or group of stationary sources located within a contiguous area and under common control that emits or has the potential to emit considering controls, in the aggregate, 10 tons per year or more of any hazardous air pollutant or 25 tons per year or more of any combination of hazardous air pollutants. * * *

Section 112(d) requires us to develop standards to control HAPs emissions from both new and existing sources. The statute requires the standards to reflect the maximum degree of reduction in HAPs emissions that is achievable. This control level is referred to as maximum achievable control technology (MACT). New source MACT must be at least as stringent as "the emission control achieved in practice by the best controlled similar source." Existing source MACT must be at least as stringent as "the average emission limitation achieved by the best performing 12 percent of the existing sources (for which the Administrator has emissions information)." These minimum stringency levels are known as "MACT floors." Consideration of control levels more stringent than the MACT floor must reflect consideration of the cost of achieving the emission reduction, any non-air quality health and environmental impacts, and energy requirements. Section 112(h) identifies two conditions under which it is not considered feasible to prescribe or enforce emission standards. These conditions include (1) if the HAPs cannot be emitted through a conveyance device, or (2) if the application of measurement methodology to a particular class of sources is not practicable due to technological or economic limitations. If emission standards are not feasible to prescribe or enforce, then the Administrator may instead promulgate equipment, work practice, design, or operational standards, or a combination thereof.

B. Regulatory Background

We proposed the standards in the **Federal Register** on December 14, 1998 (63 FR 68832). In the proposal preamble, we described the approach used to collect and evaluate information pertaining to the MACT floor. As required by the statute (section 112(d)(2) of the Act), we considered regulatory alternatives more stringent than the MACT floor:

> * * * taking into consideration the cost of achieving such emission reduction, and any non-air quality health and environmental impacts and energy requirements. * * *

In section VII of this preamble, we present major comments and changes made to the proposed rule for reactor and non-reactor batch process vents, continuous process vents, storage vessels, equipment leaks, wastewater, and heat exchange systems.

For the final rule, we used the Generic MACT (GMACT) (40 CFR part 63, subparts SS, UU, and WW) for continuous process vents, equipment leaks, and storage tanks. We modeled the batch process vent provisions after the Group IV Polymers and Resins NESHAP (40 CFR part 63, subpart JJJ). In December 1996, petitions for review of the promulgated rules for the Group I and IV Polymers and Resins NESHAP were filed. The petitioners raised many technical issues and concerns with the drafting clarity of these rules. On March 9, 1999 (64 FR 11560), we proposed correcting amendments to these rules to address the petitioners' issues and any inconsistencies that were discovered during the review process. For purposes of clarity and consistency, we incorporated several changes from the March 9 proposal into this rule. The BID contains a summary of the litigation-based changes that were proposed to the Group IV Polymers and Resins NESHAP that are applicable to this rule.

IV. What are the requirements of the Rule?

A. Summary of the Standards

We are summarizing the promulgated standards for new and existing affected sources in Table 1 and Table 2, respectively. The tables below present the standards by emission point and present the alternative organic HAPs emission limit of 50 parts per million by volume (ppmv), or 20 ppmv outlet organic HAPs concentration for combustion devices.

You must comply with the standards for existing affected sources 3 years from the effective date of the rule. You must comply with the standards for new affected sources upon start-up.

TABLE 1.—STANDARDS FOR NEW AFFECTED SOURCES

Emission point	Applicability criteria	Standard
Storage Vessels	Vessels with capacities of 50,000 gallons or greater with vapor pressures of 2.45 psia or greater Vessels with capacities of 90,000 gallons or greater with vapor pressures of 0.15 psia or greater	95 percent reduction OR alternative standard of venting to a control device continuously achieving a 50 ppmv outlet organic HAPs concentration or 20 ppmv outlet organic HAPs concentration for combustion devices.
Continuous Process Vents	Process vents with a TRE value less than or equal to 1.2	85 percent reduction

TABLE 1.—STANDARDS FOR NEW AFFECTED SOURCES—Continued

Emission point	Applicability criteria	Standard
OR alternative standard of venting to a control device continuously achieving a 50 ppmv outlet organic HAPs concentration or 20 ppmv outlet organic HAPs concentration for combustion devices.		
Reactor Batch Process Vents	No applicability criteria, all reactor batch process vents are subject to control	95 percent reduction over the batch cycle OR 0.0004 lb of HAPs per 1,000 lbs of product produced and 0.045 lb of HAPs per 1,000 lbs of solvent-based product OR alternative standard of venting to a control device continuously achieving a 50 ppmv outlet organic HAPs concentration or 20 ppmv outlet organic HAPs concentration for combustion devices.
Non-Reactor Batch Process Vents	Uncontrolled emissions from the collection of non-reactor batch process vents within the affected source greater than or equal to 0.25 tpy	76 percent reduction for the collection of non-reactor batch process vents within the affected source OR alternative standard of venting to a control device continuously achieving a 50 ppmv outlet organic HAPs concentration or 20 ppmv outlet organic HAPs concentration for combustion devices.
Heat Exchange Systems	No applicability criteria	Monitor for leaks.
Equipment Leaks	The equipment contains or contacts ≥5 weight-percent organic HAP, and operates ≥300 hours per year	Comply with subpart UU leak detection and repair program.

TABLE 2.—STANDARDS FOR EXISTING AFFECTED SOURCES

Emission point	Applicability criteria	Standard
Storage Vessels	Not applicable.	No control requirements.
Continuous Process Vents	Not applicable.	No control requirements.
Reactor Batch Process Vents	No applicability criteria, all reactor batch process vents are subject to control.	83 percent reduction over the batch cycle OR 0.0057 lbs of HAPs per 1,000 lbs of product produced and 0.0567 lb of HAPs per 1,000 lbs of solvent-based product OR alternative standard of venting to a control device continuously achieving a 50 ppmv outlet organic HAPs concentration or 20 ppmv outlet organic HAPs concentration for combustion devices.
Non-Reactor Batch Process Vents	Uncontrolled emissions from collection of non-reactor batch process vents within the affected source greater than or equal to 0.25 tpy.	62 percent reduction for collection of non-reactor batch process vents within the affected source OR alternative standard of venting to a control device continuously achieving a 50 ppmv outlet organic HAPs concentration or 20 ppmv outlet organic HAPs concentration for combustion devices.
Heat Exchange Systems	No applicability criteria.	Monitor for leaks.
Equipment Leaks	The equipment contains or contacts ≥5 weight-percent organic HAP, and operates ≥300 hours per year.	Comply with subpart UU leak detection and repair program.

1. Alternative Standard

As an alternative to the standards presented above for storage vessels, continuous process vents, reactor batch process vents, and non-reactor batch process vents, you can choose to meet an alternative emission limit. Under the alternative emission limit, emissions requiring control may be vented to a control device continuously achieving an outlet concentration of 50 ppmv of organic HAPs or an outlet concentration of 20 ppmv of organic HAPs for combustion devices.

2. Aggregating Batch Process Vent Streams

Batch process vent streams may be combined and controlled at the same level as required for an individual reactor batch process vent.

3. Pollution Prevention Alternatives

For some batch emission episodes, you can operate a condenser as a process condenser for some episodes and as a control device for other batch emission episodes (*e.g.*, gassing operations), provided that certain pollution-prevention measures are taken.

Also, you can use process modifications (*e.g.*, reduced purge rate on a reactor vessel) to reduce emissions from new and existing affected sources. You can take credit toward the emission reduction requirements as part of demonstrating compliance through the permitting process.

B. Compliance and Performance Test Provisions

We based the compliance and performance test provisions on the Hazardous Organic NESHAP (HON), with the following exceptions. First, test methods are different because of the specific HAPs emitted by resins facilities. Second, the specific provisions for batch process vents are based on the provisions from the promulgated Group IV Polymers and Resins NESHAP (40 CFR part 63, subpart JJJ).

We added the following test methods for determining compliance specifically for formaldehyde: Method 316 (a manual method) and Method 320 (a Fourier Transform Infrared Spectroscopy (FTIR) method). You must use either Method 18 or Method 308 for testing for methanol.

Under the rule, if you have control devices receiving 10 tons per year (tpy) (9.1 Mg/yr) or less of uncontrolled HAPs emissions, you are not required to conduct a performance test and instead may perform a design evaluation to demonstrate initial compliance with the rule. Compliance requirements for each type of emission point are discussed briefly in the following paragraphs.

1. Storage Vessels

The standards for new storage vessels refer directly to the Generic MACT storage vessel provisions (40 CFR part 63, subpart WW). The control status of storage vessels is determined based on the storage vessel capacity and vapor pressure of the stored material. Vessels with capacities of 50,000 gallons or greater with vapor pressures of 2.45 pounds per square inch absolute (psia) or greater, and vessels with capacities of 90,000 gallons or greater with vapor pressures of 0.15 psia or greater, are required to reduce emissions of HAPs by 95 percent.

Compliance demonstration provisions include initial and periodic visual inspections of vessels, roof seals, and fittings, as well as internal inspections.

If you choose to comply with the alternative standard for storage vessels using a control device, you must conduct a performance test as specified in the rule to show initial compliance with the standard. Existing storage vessels are not required to be controlled.

2. Continuous Process Vents

The standards for continuous process vents refer directly to the Generic MACT closed vent system provisions (40 CFR part 63, subpart SS) for compliance provisions. At new affected sources, continuous process vents with a total resource effectivess (TRE) index value less than or equal to 1.2 must reduce emissions by 85 percent. The TRE calculation involves an emissions test or engineering assessment.

3. Batch Process Vents

Compliance is demonstrated by showing that, over a batch cycle for an individual reactor, the specified percent reduction is achieved. If a collection of reactor vents is sent to the same control device, compliance is demonstrated by showing the specified percent reduction is achieved over a representative period of time. To demonstrate this, you must develop an emissions profile that identifies each batch emission episode included in the batch process vent, and characterizes emissions from each batch emission episode on a mass emitted per unit time basis. Using this emissions profile, you must show that the periods of under-control and over-control of emissions balance and the batch cycle percent reduction, or the overall percent reduction, is achieved. The rule contains procedures for estimating emissions from individual batch emission episodes, estimating control device efficiency, and for demonstrating that the required percent reduction is achieved.

Procedures for demonstrating compliance with the alternative pound of HAPs per 1,000 pounds of product emission limit are also included in the rule.

4. Heat Exchange Systems

There are no performance test requirements for heat exchange systems. Compliance is demonstrated through the monitoring of cooling water to detect leaks in heat exchange systems. If a leak is detected, you must repair the heat exchange system.

5. Equipment Leaks

The standards for equipment leaks refer directly to the Generic MACT equipment leak provisions (40 CFR part 63, subpart UU). We retained the use of Method 21 in the rule to detect leaks. Method 21 requires a portable organic vapor analyzer to monitor for leaks from equipment in use. A "leak" is a concentration specified in the rule for the type of equipment being monitored. In the rule, we require the use of Method 18 to determine the organic content of a process stream.

6. Alternative Standard

a. Initial Compliance Demonstration. The alternative emission limit for storage vessels, continuous process vents, reactor batch process vents, and non-reactor batch process vents differs from the 50 ppmv, or 20 ppmv for combustion devices organic HAP outlet concentration alternative that accompanies the percent reduction requirements for storage vessels and continuous process vents in that a performance test specific to an individual emission point is not required. Instead, an initial demonstration that the control device continuously achieves an organic HAP outlet concentration equal to or less than 50 ppmv, or 20 ppmv for combustion devices is required.

b. Continuous Monitoring Device. An owner or operator may also comply with the 50 ppmv or 20 ppmv for a combustion device organic HAP outlet concentration limit through the use of a continuous emission monitor. An initial compliance demonstration or parametric monitoring is not required to comply with this alternative. Instead, an FTIR is used to continuously demonstrate that a control device achieves the required organic HAP outlet concentration.

C. Monitoring Requirements

After initial compliance is achieved, we require monitoring of HAPs emissions and control and recovery device operating parameters. Under the alternative standard, HAPs emissions are monitored directly as part of the outlet organic HAPs concentration of 50 ppmv, or 20 ppmv for combustion devices. Control device operating parameters are monitored as part of complying with the percent reduction requirements of the rule. The quantity of resin produced and resulting emissions are monitored as part of complying with the pound of HAPs per 1,000 pounds of resin product emission limits for reactor

batch process vents. Emissions per batch cycle are initially determined based on emission estimation equations provided in the rule, direct measurement, or engineering assessment, depending on certain criteria in the rule. You may determine continuous compliance based on these initial emission estimates until a process change makes them no longer appropriate.

We require continuous parameter monitoring for control devices, except where the control device receives less than 1 ton per year of uncontrolled HAPs. In these cases, you must conduct a daily or per batch demonstration to demonstrate that the control device is operating properly. Additionally, if you have control devices serving storage vessels, you are not required to conduct continuous parameter monitoring unless you specify continuous monitoring in the monitoring plan required by the referenced 40 CFR part 63, subpart SS provisions. However, if you use a control device for a storage vessel, you must identify the appropriate monitoring procedures to be followed for compliance demonstration purposes. Further, if a control device serves both a storage vessel(s) and another emission point subject to the rule, the control device is subject to continuous parameter monitoring if the other emission point is subject to continuous parameter monitoring.

You must monitor parameters when emissions are vented to the control device. The rule directly references the 40 CFR part 63, subpart SS monitoring requirements for continuous process vents and storage vessels. However, there are general monitoring requirements specified in the rule (*e.g.*, establishment of parameter monitoring levels) that apply to all emission points.

In the rule, we identify parameters to be monitored for most control devices expected to be used for emission points regulated by the rule. Parameter monitoring levels are established based on design evaluation for control devices with uncontrolled emissions less than 10 tons per year. For all other control devices required to conduct continuous parameter monitoring, parameter monitoring levels are established based on a performance test, but can be supplemented by manufacturer's recommendations and/or an engineering assessment. If you choose to supplement results of the performance test using manufacturer's recommendations and/or engineering assessment, the established parameter monitoring level is subject to review and approval by the Administrator.

You can determine parameter monitoring averages based on all recorded values except for values recorded under certain conditions, for example, under conditions of start-up, shutdown, or malfunction. Parameter averages must be daily averages for control devices serving continuous process vents, storage vessels (if required), or equipment leaks. Parameter averages may be either batch cycle daily averages or block averages for batch process vents. Parameter averages based on batch cycle daily averages cover a 24-hour period, based on the defined operating day, and may or may not cover multiple batch cycles for the batch process vent. A batch cycle daily average may also cover partial batch cycles and, therefore, we require that you provide the information required to calculate parameter monitoring compliance for partial batch cycles. Parameter averages based on block averages cover the complete batch cycle, regardless of the length of time for the batch cycle.

We included provisions for alternate monitoring parameters in the rule. You must apply for approval to monitor an alternate parameter.

D. Recordkeeping and Reporting Requirements

The general recordkeeping and reporting requirements of this rule are very similar to those found in the HON (40 CFR part 63, subparts F, G, and H). You are also required to comply with the notification, recordkeeping, and reporting requirements in the general provisions for this rule, subpart A of 40 CFR part 63. We included a table in the rule that designates which sections of subpart A apply to this rule. Specific recordkeeping and reporting requirements for each type of emission point are also included in the rule. The rule references the recordkeeping and reporting requirements for continuous process vents, storage vessels, and equipment leaks.

You are required to keep records and submit reports of information necessary to document compliance for affected sources. You must keep records for 5 years. The following reports must be submitted to the Administrator as appropriate: (1) Precompliance Report, (2) Notification of Compliance Status, (3) Periodic Reports, and (4) Other Reports. The requirements for each of the four reports are summarized below. In addition, if you are complying with the equipment leak requirements contained in subpart UU, the closed vent requirements in subpart SS, or the storage tank requirements in subpart WW, you must follow the recordkeeping and reporting requirements in the respective subpart.

1. Precompliance Report

You must submit the Precompliance Report no later than 12 months prior to the compliance date. The Precompliance Report includes the following, as appropriate: compliance extension requests; requests to monitor alternative parameters; intent to use alternative controls; intent to use the alternative continuous monitoring and recordkeeping allowed by the rule; requests for approval to use engineering assessment to estimate emissions from a batch emissions episode; information related to establishing parameter monitoring levels; information specified in § 63.1417(e)(2)(iii) of subpart OOO when following the procedures in § 63.1417(e)(2) of subpart OOO for determining compliance with the batch process vent standards; and requests for ceasing to collect monitoring data during a start-up, shutdown, or malfunction when that monitoring equipment would be damaged if it did not cease to collect monitoring data.

You may submit supplements to the Precompliance Report to request the Administrator's approval of items, such as those previously discussed, or to clarify or modify information previously submitted.

2. Notification of Compliance Status

You must submit the Notification of Compliance Status 150 days after the affected source's compliance date. It includes the information necessary to demonstrate that compliance has been achieved for emission points required to be controlled by the rule. Information in the report includes, but is not limited to, the results of any performance tests, one complete test report for each test method used for a particular kind of emission point, TRE determinations for continuous process vents, design analyses for storage vessels and for certain batch process vents, data or other information used to demonstrate use of engineering assessment to estimate emissions for a batch emissions episode, the determination of applicability for flexible operation units, and monitored parameter levels for each emission point and supporting data for the designated level.

3. Periodic Reports

Generally, you are required to submit Periodic Reports semiannually. However, there is an exception. The Administrator may request that you submit quarterly reports for certain emission points that the Administrator identifies. After 1 year, semiannual

reporting can be resumed, unless the Administrator requests continuation of quarterly reports.

Periodic Reports include information required to be reported under the recordkeeping and reporting provisions for each emission point. For continuously monitored parameters, the data for those periods when the parameters are above the maximum or below the minimum established levels are included in the reports. Periodic Reports also include results of any performance tests conducted during the reporting period and instances when required inspections revealed problems.

4. Other Reports

You are also required to submit other reports, including: the notification of inspections required for storage vessels; and reports of changes to the primary product for an APPU or process unit; reports of addition of one or more APPUs, addition of one or more emission points, or change in the status of emission points.

V. What Did We Consider in Developing the Rule?

A. Relationship to Other Rules

If you have affected sources subject to this rule, you may also be subject to other existing rules (see § 63.1401(g)–(j) in the rule).

Affected sources subject to this rule may have storage vessels subject to the New Source Performance Standards (NSPS) for Volatile Organic Liquid Storage Vessels (40 CFR part 60, subpart Kb). For storage vessels subject to and complying with the NSPS, this rule requires that such storage vessels remain in compliance with the NSPS because the NSPS level of control (*i.e.*, 95 percent) is more stringent than the control level for the final rule (*i.e.*, 50 percent). For storage vessels subject to the NSPS but that did not have to apply controls (*e.g.*, the storage vessels store an organic liquid but the vapor pressure of the stored material is below the applicability criteria), this rule states that after the compliance date for the final rule, such storage vessels are only required to comply with this rule and are no longer subject to subpart Kb.

Affected sources subject to this rule may have cooling towers subject to the NESHAP for Industrial Cooling Towers (40 CFR part 63, subpart Q). There is no conflict between the requirements of subpart Q and this rule. Subpart Q prohibits the use of certain chemicals in the cooling tower water, and this rule implements a leak detection and repair program for organic HAPs. Therefore, if you have affected sources subject to both rules, you must comply with both rules. If you own or operate shared heat exchange systems, you may also find that they are already subject to the HON provisions (40 CFR part 63, subpart F). In such cases, compliance with the HON provisions constitutes compliance with the requirements of this rule.

Affected sources subject to this rule may also be subject to the NSPS for Equipment Leaks of Volatile Organic Compounds (VOC) in the Synthetic Organic Chemicals Manufacturing Industry (40 CFR part 60, subpart VV) and/or the National Emission Standards for Organic Hazardous Air Pollutants (*i.e.*, HON) for Equipment Leaks (40 CFR part 63, subpart H). After the compliance date for this final rule, you are only required to comply with this rule for such affected sources and are no longer subject to 40 CFR part 60, subpart VV, or to CFR part 63, subpart H. This rule directly references the Generic MACT equipment leak provisions contained in subpart UU. The provisions contained in subpart UU are equivalent to the HON provisions contained in the proposed rule, and therefore, equivalent to the HON. The provisions contained in subpart UU are more stringent than subpart VV.

Another likely instance of interaction between this rule and other rules is related to storage vessels already covered by the HON; this is likely to occur at amino/phenolic resins production facilities that are collocated with formaldehyde plants subject to the HON. In such cases, a formaldehyde storage vessel supplying formaldehyde to the amino/phenolic resins facility is likely to be subject to the HON. The storage vessel assignment procedures in this rule address such situations. If a storage vessel is already subject to another part 63 standard, that storage vessel is considered to be assigned to the process unit subject to the part 63 standard and is not subject to this rule.

B. Stakeholder and Public Participation

Prior to proposal of the rule, representatives from other interested EPA offices and programs, including Regional Offices and State environmental agency personnel, participated in the rulemaking process. In addition, the industry provided responses to a survey conducted in 1992, and we met with industry members to obtain their input during the regulatory development process. The proposed rule reflected the results of all of those interactions and the information provided by the industry.

We proposed the rule for Amino/Phenolic Resins Production in the **Federal Register** on December 14, 1998 (63 FR 68832), and we specifically requested comments on the basis for the percent reduction standards for reactor batch process vents, development of separate control requirements for reactor and non-reactor batch process vents, methanol emissions from amino/phenolic resins production, use of solvent-based and non-solvent-based alternative emission limits, use of Fourier Transform Infrared Spectroscopy and performance specification 15 (PS–15), definitions of amino and phenolic resin, applicability criteria alternative for storage vessels, and heat exchange systems. We received five comment letters from amino/phenolic resins producers and one letter from control device manufacturers. In addition, after proposal, we considered follow-up information provided by the industry in decisions affecting the final rule. We received no comments from environmental groups or State or local environmental agencies.

We carefully considered the comments and made changes to the proposed rule where determined to be appropriate. We discuss the most significant comments and responses in section VII of this preamble. A detailed discussion of all significant comments and responses on the proposed rule can be found in the BID for amino/phenolic resins, which is referenced in the **ADDRESSES** section of this preamble.

VI. What Are the Impacts of the Standards?

The rule affects 40 amino/phenolic resins facilities that are major sources in themselves or that are located within a major source. The impacts are presented relative to a baseline reflecting the level of control in the absence of the rule. The estimate of the impacts is presented for existing facilities only, since no new facilities are projected to be constructed. For a facility or emission point within a facility already in compliance with the standards, no impacts were estimated.

A. Primary Air Impacts

The standards are estimated to reduce organic HAPs emissions from all existing sources by 361 tpy from a baseline level of 703 tpy. This is a 51 percent reduction. Table 3 summarizes the organic HAPs emission reductions for each of the emission points.

TABLE 3.—ORGANIC HAPS EMISSION REDUCTIONS BY EMISSION POINT FOR EXISTING SOURCES

Emission point	Baseline emissions (tpy)	Emissions after final rule (tpy)	Emission reduction (tpy)	Percent reduction (%)
Reactor Batch Process Vents	223.1	40.2	182.87	82
Non-reactor Batch Process Vents	120.1	60.6	59.5	49.5
Continuous Process Vents	128.3	128.3	0	0
Storage Tanks	72.1	72.1	0	0
Equipment Leaks	159.4	41.0	118.4	74.3
Total	703.1	342.3	360.8	51.3

B. Non-Air Environmental Impacts

The standards are not expected to increase the generation of solid waste at any amino/phenolics resin facility. The use of scrubbers to control emissions will increase water consumption as a result of evaporation and bleed-off (see the proposal preamble at 63 FR 68854 for details). Based upon available information, we expect that affected facilities will be able to either send the scrubber wastewater to a treatment facility or recycle the scrubber wastewater back into the process. Therefore, the use of scrubbers will result in minimal, if any, adverse wastewater impacts.

C. Energy Impacts

We do not anticipate any significant increase in national annual energy usage as a result of this rule. Energy impacts include changes in energy use, typically increases, and secondary air impacts associated with increased energy use. Increases in energy use are associated with fuel for the operation of control equipment; in this case, the use of scrubbers to control reactor vents. Energy credits are attributable to the prevention of organic HAPs emissions from equipment leaks. Secondary air impacts associated with increased energy use are the emission of particulates, sulfur dioxides (SO_X), and nitrogen oxides (NO_X). These secondary impacts are associated with power plants that would supply the increased energy demand.

D. Cost Impacts

Cost impacts include the capital costs of new control equipment, the cost of energy (supplemental fuel and electricity) required to operate control equipment, operation and maintenance costs, and the cost savings generated by reducing the loss of valuable product in the form of emissions. Also, cost impacts include the costs of monitoring, recordkeeping, and reporting associated with the standards. There are no estimated cost impacts for new facilities because no new facilities are expected to be constructed.

Under the rule, the total capital costs for existing sources are estimated at $2.3 million (1998 dollars), and total annual costs are estimated at $3.3 million (1998 dollars) per year, which includes $1.4 million for monitoring, recordkeeping, and reporting. The actual compliance cost impacts of the rule may be less than presented because of the potential to use common control devices, to upgrade existing control devices, and to vent emissions streams into current control devices. Because the effect of such practices is highly site-specific and data were unavailable to estimate how often the lower cost compliance practices could be utilized, it is not possible to quantify the amount by which actual compliance costs would be reduced.

E. Economic Impacts

An economic impact analysis was performed at proposal to estimate the impacts of the rule on affected businesses in the Amino/Phenolic Resins Production source category. That analysis showed that the price and output changes for affected businesses in this source category were an increase of 0.08 percent in product price and output decrease of 0.05 percent in product output, respectively, for amino resin producers and similar estimates for phenolic resin producers (0.07 percent and 0.02 percent, respectively). No plant closures were expected in this source category.

The estimated annual compliance costs of the final rule are roughly $1.9 million as shown in section VI.C. This is a reduction from the compliance costs that were input to the economic impact analysis performed at proposal. Given this reduction in estimated costs, the economic impacts of the final rule would be lower than those estimated at proposal. We, therefore, conclude that the increase in product price would be no more than 0.08 percent for amino resin producers, and 0.07 percent for phenolic resin producers, and the decrease in product outputs would be no more than 0.05 percent for amino resin producers and 0.02 percent for phenolic resin producers.

VII. What Significant Comments Did We Consider and What Major Changes Did We Make to the Proposed Standards?

The major changes that we made to the rule based on public comments include: (1) Reducing the percent reduction standard for reactor batch process vents at existing affected sources and including different alternative emission limits for solvent-based and non-solvent-based resin production, (2) revising the standards for non-reactor batch process vents at new and existing affected sources, (3) deleting the control requirements for storage vessels at existing affected sources, (4) revising the applicability criteria for storage vessels at new affected sources, (5) deleting the HON control level of 98 percent emission reduction for continuous process vents with a TRE value less than or equal to 1.0, (6) dropping the wastewater provisions, and (7) making changes to encourage pollution prevention.

In recognition of the fact that the most commonly used control devices for the amino/phenolic resins industry are recovery devices (*e.g.*, condensers and scrubbers) and not combustion devices, and that 50 ppmv of organic HAPs is a more representative outlet concentration for a recovery device than 20 ppmv, we have increased the minimum HAPs concentration level for defining a process vent from 20 ppmv to 50 ppmv. However, the 50 ppmv mass emission limit is more stringent than the rule requirement to reduce emissions by 83 percent. The 50 ppmv is being offered as an alternative to the required control level and is not intended to be equivalent. In concert with this change in the definition of process vent, we have made changes to the alternative standards for storage vessels (§ 63.1404(c)), continuous process vents (§ 63.1405(f)), reactor batch process vents (§ 63.1406(d)), and non-reactor batch process vents (§ 63.1406(d)). These provisions have been changed to allow you to meet a 50 ppmv emission limit when using a recovery device, but you are still required to meet a 20 ppmv

emission limit when using a combustion device. We determined that 20 ppmv is a representative outlet concentration for combustion devices.

In order to minimize cross referencing and streamline the rule, we changed the proposed rule format. In changing the rule format our intent was not to change the requirements of the proposed standard, but rather to make the final rule easier to understand and implement. The most significant change has been to reference provisions promulgated for the Generic MACT (GMACT) standard (64 FR 34854, June 30, 1999). Instead of referencing the HON for requirements for continuous process vents, equipment leaks, and storage tanks, we reference equivalent GMACT provisions. For closed vent streams from continuous process vents and storage tanks, we reference 40 CFR part 63, subpart SS. For control of storage tanks through the use of floating roofs, we reference 40 CFR part 63, subpart WW. Additionally, for control of equipment leaks, we reference 40 CFR part 63, subpart UU. The control requirements are equivalent to the HON requirements in the proposed rule and do not in any way change the substantive requirements of the rule.

Additionally, we have adopted the GMACT recordkeeping and reporting requirements in the final rule where the GMACT requirements are easier to understand or less burdensome. In instances where, the GMACT requirements are less flexible or more burdensome than the requirements in the proposed rule, we have added language to preserve the flexibility of the proposed rule.

Comments: Two commenters presented new test data to replace their original data which were used in assessing the MACT floor for reactor batch process vents at proposal. In general, the new data indicated that the control devices at several facilities were achieving lower percent emission reductions than reported in the 1992 survey responses used at proposal. The commenters also presented information showing that one facility no longer produces amino/phenolic resins, and another facility does not produce amino/phenolic resins as their primary product. Also, the commenters argued that one facility shares its primary control device (a catalytic incinerator) with another operation covered by a separate MACT source category and, thus, should be removed from the analysis.

Response: Using information submitted by the industry, we revised the MACT floor based on a new set of top performing amino/phenolic resins facilities. The MACT floor for existing sources is set by the average performance achieved by the best performing 12 percent of existing sources.

We elected to set the MACT floor level of control based on the arithmetic average of the control device performance of the top five facilities, which results in a required control level of 82.6 percent (rounded to 83 percent). Although we have discretion to interpret "average" as either the arithmetic mean, median, or mode, we selected arithmetic average, since it corresponds to an available control device, and since the universe of control device performance across the industry is a broad continuum. The provisions in the final rule reflect this change in the percent reduction requirement for reactor batch process vents at existing affected sources.

There has been no change to the standard for new affected sources. The same facility that was selected as the best performing facility in the proposal analysis is selected for the reanalysis and, thus, represents new source MACT. We continue to require a 95 percent emission reduction across the batch cycle for reactor batch process vents at new affected sources in the final rule.

Comments: In order to better address the diversity of processes and subsequent emissions of facilities in the industry, commenters suggested that solvent-based and non-solvent-based resin processes have separate requirements, especially for the alternative emission limit (*i.e.*, pound of HAPs per 1,000 pounds of product). The commenters stated that the proposed alternative emission limit reflects only non-solvent-based resin manufacturing. One commenter submitted HAPs emissions data representing phenolic resin manufacturing at its facility, which showed that over 87 percent of the total emissions were attributed to the added solvent. The commenter concluded that failure to make this distinction in the emission standards would result in unfair competition between solvent-based and non-solvent-based resin manufacturers, as the former would need more stringent controls, resulting in a higher cost to control their higher emissions.

Response: We agree with the commenters that separate alternative emission limits to account for the different emission levels for solvent-based and non-solvent-based resin production are appropriate. At proposal, the rule offered a single alternative emission limit value, applicable to both solvent-based and non-solvent-based resin production. However, in reviewing the data and comments since proposal, we recognize that an 83 percent emissions reduction for a solvent-based process is significantly different in terms of a mass emission rate from an 83 percent reduction achieved by a non-solvent-based process. Therefore, separate emission limits (*i.e.*, one for solvent-based resins and one for non-solvent-based resins) yields an alternative that better equates to the floor-level of control than the single mass emission limit in the proposed rule.

For existing affected sources, the alternative emission limits in the final rule are 0.0057 pound of HAPs per 1,000 pounds of non-solvent-based resin produced, and 0.0567 pound of HAPs per 1,000 pounds of solvent-based resin produced. For new affected sources, the alternative emission limits are 0.0004 pound of HAPs per 1,000 pounds of non-solvent-based resin produced, and 0.045 pound of HAP per 1,000 pounds of solvent-based resin produced.

The revised alternative emission limits are based on mass emissions data from the top five performing facilities used to develop the 83 percent control level for the existing source floor. Three of the facilities in the floor were non-solvent-based resin producers and two facilities were solvent-based resin producers. The alternative emission limit for existing facilities was developed by averaging the emissions (HAPs per lb. of product) for the two solvent-based resin facilities to develop the solvent-based resin alternative emission limit. Similarly, the emissions of the three non-solvent-based resin facilities were averaged to develop the alternative emission limitation for the non-solvent-based resin facilities. In this way, we determined the mass emission limit that corresponds to the 83 percent reduction requirement for each type of facility. For new sources the best performing of the two solvent-based facilities was selected to represent the mass emission limit. The best performing non-solvent based facility was chosen for the non-solvent-based new source mass emission limit. By using the five floor facilities to develop the alternative emission limit, we ensured equivalency between the alternative limit and the floor value of an 83 percent reduction for existing sources and a 95 percent reduction for new sources.

We project that solvent-based resin manufacturers will most likely comply with the percent reduction standard, whereas most non-solvent-based resin manufacturers will comply with the alternative emission limit, potentially with little, if any, secondary control

required. A single alternative emission limit recalculated based on the average performance of the top 12 percent (5 facilities) would allow many non-solvent-based resin manufacturers to emit significantly more HAPs than they are currently emitting.

Averaging the emission limits within each industry segment (solvent-based and non-solvent-based) results in values with an order of magnitude difference. Information from other facilities in the data base supports our conclusion that solvent emissions from solvent-based resin production causes the uncontrolled HAPs emission rate to be about an order of magnitude higher than the emission rate from non-solvent-based resin production.

The pound of HAPs per 1,000 pounds of resin product emission limits are presented as alternatives to the percent reduction requirements of the rule. As such, they are meant to express a performance level equivalent to the facilities judged to represent the MACT floor. Therefore, in developing the alternative emission limits, we only considered the population making up the top five performing facilities. In calculating the separate alternative limits, we decided that the presence of two solvent-based and three non-solvent-based resin manufacturers among the top five performing facilities was adequate representation for each segment of the industry.

Comment: Commenters objected to the stringency of the proposed standard for non-reactor batch process vents at new and existing affected sources and the methodology used in developing the standards. One commenter submitted revised control device performance data and requested that the EPA recalculate the non-reactor batch process vent standards using these revised control device efficiencies.

Another commenter claimed that the EPA had mistakenly attributed control to process condensers that are used on their non-reactor batch process vents, and thereby misrepresented the actual control being achieved for non-reactor batch process vents at their facility. Through discussions with this commenter, the commenter had identified three non-reactor batch process vents where they believe the primary condenser is acting as a process condenser.

Also, one commenter objected to the EPA's use of a weighted average to represent the overall performance for an affected source and requested that a straight average be used instead.

Response: We incorporated revised control device performance data into a revised analysis of the MACT floor control level for non-reactor batch process vents. Based on the revised analysis, we are reducing the standard for non-reactor batch process vents at new affected sources from an overall emission reduction of 83 percent to 76 percent for sources with uncontrolled emissions from the collection of non-reactor batch process vents within the affected source greater than or equal to 0.25 tons per year. Similarly, we are also reducing the standard for non-reactor batch process vents at existing affected sources from an overall emission reduction of 68 percent to 62 percent for sources with uncontrolled emissions from the collection of non-reactor batch process vents within the affected source greater than or equal to 0.25 tons per year.

We disagree with using a straight average of control device efficiencies to determine the control level for an individual facility. We believe that the control level should represent the total mass reduction for that facility. Using a straight average of control device efficiencies would result in an inaccurate representation of the actual performance of a facility. For example, if a facility had five non-reactor batch process vents, controlled the single batch process vent that has 90 percent of the emissions, and did not control the other batch process vents, a straight average would represent this facility as poorly controlled; when in fact it is a well-controlled facility.

For existing sources, the MACT floor is based on averaging the individual control levels of the five best performing facilities (top 12 percent). We based the MACT floor for new sources on the single best controlled facility.

Comments: One commenter objected to the methodology used in developing the applicability criteria for non-reactor batch process vents. The commenter objected to the fact that emissions from a single vent, not emissions from a single facility, set the uncontrolled emissions applicability criteria and objected to using the lowest level of uncontrolled emissions (*i.e.*, the smallest value), contrasting this decision to the approach used for storage vessels.

The commenter requested that EPA develop new applicability criteria for non-reactor batch process vents that are based on individual non-reactor batch process vents, rather than on a facilitywide basis. The commenter requested that the new applicability criteria be expressed as pound of emissions per 1,000 pounds of product, as was done for reactor batch process vents, and that they be based on a TRE calculation or calculation from EPA's guideline document entitled "Control of Volatile Organic Compound Emissions from Batch Processes," EPA–453/R–93–017.

Response: We note that not all facilities reported non-reactor batch process vents, although we assume that all facilities have non-reactor batch process vents and stated so in the preamble to the proposed rule. We requested additional data on the presence, emissions, and control status of non-reactor batch process vents in the proposal preamble. No additional data were provided as part of public comments.

Furthermore, the only data available for the reported non-reactor batch process vents are emissions. With emissions being the only information available, approaches like the TRE equation are not possible, and the ability to develop or use other vent-by-vent approaches to applicability criteria is restricted.

Based on data available to the Administrator, we are retaining the MACT floor, defined as a facilitywide control level and a facilitywide applicability criterion.

With regard to the commenter's objection that emissions from a single vent set the uncontrolled emissions cutoff, we did not seek out a single vent to represent the facilitywide emissions cutoff for existing affected sources. The available data indicated that the facility with the lowest emissions happened to only report a single, non-reactor batch process vent.

In response to the commenter's objection to using the facility with the lowest level of uncontrolled emissions to set the facilitywide uncontrolled emissions cutoff for existing affected sources, we must set applicability criteria that will continue to require control for those facilities already controlled at the baseline. We also believe that the commenter misunderstands the approach used for non-reactor batch process vents, compared to the approach used for storage vessels, because the applicability criteria define which facilities must apply controls, not which vents, and because the control requirement is on a total, facilitywide basis, not an individual vent basis. All five facilities defining the MACT floor for existing sources have applied controls to non-reactor batch process vents; therefore, the applicability criteria include all five facilities.

Comments: Some commenters challenged the accuracy of data and information used by EPA as the basis for the proposed standards for storage vessels. The commenters stated that

some of the storage vessels in the database were, in fact, not raw material storage vessels and other storage vessels were already part of their HON MACT affected source.

Response: We addressed these comments by requesting a confirmation of storage vessel data for each of the MACT floor facilities and by conducting a reanalysis of the MACT floor based on the confirmed data. Our reanalysis of the data concludes that there is no floor level of control for the existing source MACT floor and that the new source MACT floor determined at proposal continues to be appropriate.

For existing affected sources, we evaluated the HON level of control for storage vessels as a regulatory alternative beyond the MACT floor of no control. Based on this evaluation, we concluded that the HON control level for storage vessels is not appropriate for the known storage vessel population at amino/phenolic resins facilities, since none of the reported storage vessels meet the HON applicability criteria. Further, the HON control level for storage vessels is not cost effective for a projected, theoretical amino/phenolic resins facility storage vessel population.

Although the revised storage vessel data led us to conclude that the new source MACT floor control level is still appropriate, the applicability criteria, which determines which storage vessels must be controlled, have changed. The final rule now requires that storage vessels at new affected sources with a capacity greater than or equal to 50,000 gallons and with a vapor pressure greater than or equal to 2.45 psia must reduce emissions by 95 percent. Storage vessels at new affected sources with a capacity greater than or equal to 90,000 gallons and with a vapor pressure greater than or equal to 0.15 psia are also required to reduce emissions by 95 percent. The distinction between the storage of aqueous formaldehyde and other chemicals (non-aqueous formaldehyde) that we made in the proposed rule is no longer necessary because a large number of formaldehyde storage vessels were deleted from the analysis.

Comments: One commenter cited some issues related to the use of the TRE equation in the proposed rule. First, the commenter stated that the TRE equation is not well suited for low concentrations (*e.g.*, 100 to 200 ppmv) or low flow emission streams. Second, the commenter stated that the TRE equation should be modified to reflect the reduction of efficiency as the inlet concentration decreases. The commenter stated that the TRE equation assumes that the emission reduction achieved will always be 98 percent, but that this is not the case with low concentration emission streams. The commenter also stated that the effectiveness of incineration declines significantly at inlet concentrations of approximately 1,000 to 1,500 ppmv.

Response: We based the proposed two-tiered standard for continuous process vents at new affected sources on the MACT floor level of control (85 percent emission reduction) for vents that meet the applicability criterion and the HON process vent provisions (98 percent emission reduction). (The proposed rule did not require control of continuous process vents at existing sources.) The applicability criterion chosen to represent the specific continuous process vents that are controlled at the MACT floor is the HON TRE equation for a thermal incinerator. The HON process vent provisions were evaluated as a regulatory alternative beyond the MACT floor for continuous process vents. Although the TRE values at proposal showed that none of the continuous process vents considered in the analysis would be caught by the HON TRE applicability for new sources, we determined that if a new source were to have a continuous process vent within the accepted cost effectiveness (*i.e.*, with a TRE of 1.0 or less), it should be controlled. Therefore, the two-tiered approach was used at proposal. We agree with the commenter that the combustion efficiency is reduced as the inlet concentration decreases and, thus, the TRE equation is not an appropriate method for assessing the cost effectiveness of control beyond the MACT floor for continuous process vents in the amino/phenolic resins industry. Therefore, we deleted the second tier of the continuous process vent standard requiring 98 percent emission reduction for continuous process vents with a TRE value less than or equal to 1.0.

In the final rule, we continue to use the TRE equation as the applicability criteria for continuous process vents at the MACT floor. This decision is based on using the TRE equation to identify certain continuous process vents (*i.e.*, applicability criteria) as opposed to using the TRE equation to determine the cost effectiveness of controls. In the final rule, the standard for continuous process vents at new affected sources is 85 percent emission reduction for continuous process vents with TRE values less than or equal to 1.2.

Comments: Two commenters stated that control of wastewater streams should not be required for new affected sources. One commenter explained that the HAPs commonly present in amino/phenolic resins wastewater streams, such as formaldehyde and methanol, have low emission potential because they are highly soluble and biodegradable. In addition, the commenters stated that attempts to remove highly soluble HAPs from wastewater could lead to an increase in air emissions. The commenters challenged the assumptions used in determining that wastewater control is cost effective for new affected sources. One of the commenters disagreed with EPA's use of "hypothetical" wastewater streams, as opposed to data from actual facilities. The second commenter claimed that the wastewater provisions are not cost effective (ranging up to $41,000 per ton). The commenters also stated that EPA's assumption that flow and concentration data reported by industry were representative values (*i.e.*, annual averages) was in conflict with the rule's background document, which stated that the survey response data represented peak, rather than average or normal process conditions. One commenter concluded that if EPA had used the average figures for the new source applicability criteria, that no stream would have been required to control.

Response: We removed the wastewater control requirements for new affected sources from the final rule. At proposal, the new source wastewater requirements were determined to be a cost effective, above-the-floor MACT standard. We used the HON costing algorithm to estimate the cost of controlling wastewater streams which assumes that a combustion device is available to support the steam stripper; this is not an appropriate assumption for the amino/phenolic resins industry. Therefore, the cost analysis at proposal underestimated the costs of controlling wastewater streams for the amino/phenolic resins industry. We projected that if the cost of a combustion device were added to the costs estimated at proposal, the cost effectiveness of the HON wastewater requirements would not be acceptable.

Comments: One commenter requested that the rule allow approaches to encourage pollution prevention through stewardship and source control. The commenter specifically requested that the rule include pollution-prevention compliance alternatives that encourage emission reduction of HAPs through changes in operating practices, raw material substitutions, and process and equipment design modifications. In support of the commenter's request to allow the use of pollution-prevention measures, we received follow-up

information from the industry that included several examples of the environmental benefits (reduced emissions) achievable through the use of pollution-prevention measures.

The commenter stated that their facility has over-sized condensers after their reactors which operate during gassing operations to recover valuable solvent. The commenter stated that unless the rule defines their condensers as a control device during gassing operations, they would be forced to turn off the condenser during this phase to have enough emissions going to a control device to achieve the specified percent reduction. The commenter pointed out that shutting off the condenser would result in 70 pounds per hour of HAP emissions going to a control device that could have been recovered and reused.

The commenter further pointed out that other facilities in the industry typically operate smaller condensers, and they are not operated during the reactor degassing phase. Under this more typical operating scenario, the emissions exiting the process condenser would be much higher and, thus, the percentage reduction would be achievable. The commenter pointed out that under the Pharmaceuticals Production NESHAP, the condenser immediately following a reactor vessel can be a process condenser during some operations (*i.e.*, reflux) and a control device during other operations (*i.e.*, gassing). The commenter requested that EPA adopt the approach used in the Pharmaceuticals Production NESHAP.

The commenter stated that in addition to recovering material with process condensers, there are many other types of pollution prevention that the rule should encourage. One example provided was the use of a reduced nitrogen purge rate for the reactor. The commenter stated that the emission of HAPs during purging operations could be reduced by up to 80 percent if the nitrogen purge rate was reduced. The commenter pointed out that although this process change would save energy, nitrogen, and raw materials, like the condenser situation, the change would result in an emissions rate too low to then be further controlled to meet the specified percent HAPs emission reduction.

Response: We agree with the commenter that the rule should encourage compliance through pollution-prevention alternatives. To that end, we made two groups of changes to the final rule. First, we made changes to allow a condenser to operate as a process condenser for some batch emission episodes and to operate as a control device for other batch emission episodes (*e.g.*, gassing operations), provided that certain pollution-prevention measures are taken. Second, we made changes to encourage and clarify the use of process modifications (*e.g.*, reduced purge rate on a reactor vessel) to reduce emissions and to receive credit toward the emission reduction requirements of the rule.

We are establishing these changes in concert with the philosophy of pollution prevention. We have the potential to achieve equal or better pollution reduction, while also reducing emissions to other media. However, we do not have enough quantitative data to know how much of a reduction in emissions a facility can achieve through using pollution-prevention measures. Since we do not know what percent reduction in emissions to assign to the pollution-prevention approach, we cannot directly compare it to more traditional approaches. For these reasons, while there is a facility in the industry using some of these pollution-prevention approaches, we did not attempt to assign them a percent emissions reduction and include them in a determination of the floor.

To implement the changes described above, we revised several definitions, added a definition of *inprocess recycling*, specified in the batch process vent performance testing and compliance demonstration provisions when a condenser can function as a control device, and added a recordkeeping/demonstration requirement to ensure that inprocess recycling is taking place.

We revised the definitions of *air pollution control device*, *process condenser*, and *uncontrolled HAP emissions* as part of making this change. The revisions to the definition of *air pollution control device* specify the conditions under which a condenser, that at times operates as a process condenser, can be considered to be a control device. The revisions to the definition of *uncontrolled emissions* allow emissions to be calculated prior to a condenser that is operating as a control device provided the recovered HAPs are used in inprocess recycling. When a condenser operates as a control device, the condenser must not be operating as a process condenser. Uncontrolled emissions are still calculated after a condenser when it is operating as a process condenser.

We intended for the proposed standards to provide flexibility to use pollution-prevention measures, such as reduced purge rates. To ensure sources have the flexibility to implement a variety of pollution-prevention measures, we made minor changes in the final rule in terms of the definition of control device and added a definition of *control technology*. The new definition of control technology will allow the implementation of reduced reactor purge rates and other pollution-prevention measures.

We are adding these measures to the final rule to provide facilities flexibility and the opportunity to take credit for their pollution-prevention measures, provided certain conditions are met. We do not, however, assume that a facility using a pollution-prevention approach will be operating in compliance with the standard. Any facility using this approach must demonstrate that it is meeting the percent reduction required by the rule.

Comments: Two commenters expressed concerns regarding the equipment leak analysis supporting the proposed standard (*i.e.*, the HON leak detection and repair (LDAR) program) for equipment leaks. The commenters' main concerns were that: (1) The use of the average synthetic organic chemical manufacturing industry (SOCMI) emission factors overstated emissions from amino/phenolic resins facilities, (2) the costs were understated (*e.g.*, by always using the lower cost assumption), and (3) experience with LDAR programs at other facilities showed that LDAR programs were costly and ineffective. The commenters believed that no LDAR program should be implemented for amino/phenolic resins facilities or, at most, a LDAR program based on the presumptive MACT level (*i.e.*, the monthly LDAR program pursuant to SOCMI subpart VV to 40 CFR part 63) should be implemented. One commenter also stated that the State of Massachusetts Regulation CMR 7.18(19), upon which the MACT floor for new facilities was based, had been mischaracterized.

Response: In consideration of these comments, we conducted a reanalysis of the MACT floor and regulatory alternatives above the floor for implementing the LDAR program for emissions from equipment leaks for both new and existing affected sources. We made the following major changes in the reanalysis:

- Only included those facilities that provided facility-specific information on component counts, percent HAPs contacting the components, and time in HAPs service.
- Used the State of Massachusetts Regulation CMR 7.18(19) in lieu of SOCMI subpart VV to represent the new source MACT floor.
- Used the State of Massachusetts Regulation CMR 7.18(19) instead of

SOCMI subpart VV to 40 CFR part 63 as a regulatory alternative above the floor (MACT floor is no control) for existing sources.

The average SOCMI emission factors continue to reflect the best data available to represent LDAR emissions from this industry.

We modified the costing algorithm to include costs associated with components in heavy liquid service; these costs were not included at proposal. However, we concluded that other assumptions used in the proposal costing are valid and have been retained in the reanalysis. We continue to believe that facilities will try to minimize their costs in implementing LDAR programs, and the use of assumptions that minimize costs is, therefore, reasonable.

The results of the reanalysis confirm that it is cost effective to go beyond the MACT floor for existing and new affected sources to include a HON-based LDAR program at amino/phenolic resins facilities in the final rule. The average incremental cost effectiveness of implementing the HON-based LDAR program is $1,677 per ton of emission reduction for both new and existing affected sources.

Comments: Two commenters stated that heat exchange systems should not be regulated for the following reasons. First, there were no data or other evidence to justify including the provisions. Second, the MACT floor for the control of heat exchange systems was not determined, and an analysis of control beyond the MACT floor was not done.

These two commenters stated that the pressure on the cooling side of process condensers, which is a commonly used heat exchange system, normally exceeds the pressure on the process side. This means that the cooling water would tend to leak into the process liquid, rather than the process liquid leaking into the cooling water and ultimately resulting in HAPs emissions from the cooling towers. Therefore, the commenters reasoned that the requirement for routine measurements and recordkeeping of the heat exchange systems is not warranted.

Response: We believe that heat exchange systems are a potential source of emissions; therefore, we retained the work practice standard in the final rule. We are not aware that the operation of heat exchange systems in the amino/phenolic resins industry is different than their operation in the SOCMI, which were determined to warrant control under the HON MACT (40 CFR part 63, subpart F). The compounds in Table 4 of the HON MACT (40 CFR part 63, subpart F) include formaldehyde, methanol, phenol, toluene, and xylene as HAPs with potential to be emitted from cooling towers. These are the major HAPs emitted by the amino/phenolic resins industry.

The heat exchange system requirements are a specific example of an emission control program necessary for the source to be operated in a manner consistent with good air pollution control practices, as specified in § 63.6(e)(1)(I) of the General Provisions for 40 CFR part 63 regulations. Because some form of monitoring is already being conducted to meet State requirements or other rules, the cost of monitoring the heat exchange system for leaks is minimal. The program is already being applied if an APPU uses a shared cooling system at sites covered by the HON or other polymer and resin rules.

Finally, the final rule retains the monitoring exemption included at proposal for a heat exchange system that operates with a pressure on the cooling water side at least 35 kilopascals greater than the maximum pressure on the process side. With this pressure differential, any leakage would be into the process fluid, not into the cooling water.

VIII. What Are the Administrative Requirements of the Rule?

A. Executive Order 12866

Under Executive Order 12866 (58 FR 51735, October 4, 1993), the EPA must determine whether the regulatory action is "significant" and therefore subject to review by the Office of Management and Budget (OMB) and the requirements of the Executive Order. The Executive Order defines "significant regulatory action" as one that is likely to result in a rule that may:

(1) Have an annual effect on the economy of $100 million or more or adversely affect in a material way the economy, a sector of the economy, productivity, competition, jobs, the environment, public health or safety, or State, local, or tribal governments or communities;

(2) Create a serious inconsistency or otherwise interfere with an action taken or planned by another agency;

(3) Materially alter the budgetary impact of entitlements, grants, user fees, or loan programs or the rights and obligations of recipients thereof; or

(4) Raise novel legal or policy issues arising out of legal mandates, the President's priorities, or the principles set forth in the Executive Order.

Pursuant to the terms of Executive Order 12866, it has been determined that this rule is not a "significant regulatory action" and is therefore not subject to OMB review.

B. Executive Order 13084—Consultation and Coordination with Indian Tribal Governments

Under Executive Order 13084, EPA may not issue a regulation that is not required by statute, that significantly or uniquely affects the communities of Indian tribal governments, and that imposes substantial direct compliance costs on those communities, unless the Federal government provides the funds necessary to pay the direct compliance costs incurred by the tribal governments, or EPA consults with those governments. If EPA complies by consulting, Executive Order 13084 requires EPA to provide to OMB, in a separately identified section of the preamble to the rule, a description of the extent of EPA's prior consultation with representatives of affected tribal governments, a summary of the nature of their concerns, and a statement supporting the need to issue the regulation. In addition, Executive Order 13084 requires EPA to develop an effective process permitting elected officials and other representatives of Indian tribal governments "to provide meaningful and timely input in the development of regulatory policies on matters that significantly or uniquely affect their communities."

Today's rule does not significantly or uniquely affect the communities of Indian tribal governments. Accordingly, the requirements of section 3(b) of Executive Order 13084 do not apply to this rule.

C. Executive Order 13045

Executive Order 13045: "Protection of Children from Environmental Health Risks and Safety Risks" (62 FR 19885, April 23, 1997), applies to any rule that: (1) Is determined to be "economically significant" as defined under Executive Order 12866, and (2) concerns an environmental health or safety risk that EPA has reason to believe may have a disproportionate effect on children. If the rule meets both criteria, the Agency must evaluate the environmental health or safety effects of the planned rule on children and explain why the planned regulation is preferable to other potentially effective and reasonably feasible alternatives considered by the Agency.

The EPA interprets Executive Order 13045 as applying only to those regulatory actions that are based on health or safety risks, such that the analysis required under section 5–501 of the Executive Order has the potential to influence the regulation. This rule is not

subject to Executive Order 13045 because it is based on technology performance and not on health or safety risks.

D. Executive Order 13132

Executive Order 13132, entitled "Federalism" (64 FR 43255, August 10, 1999), requires EPA to develop an accountable process to ensure "meaningful and timely input by State and local officials in the development of regulatory policies that have federalism implications." "Policies that have federalism implications" is defined in the Executive Order to include regulations that have "substantial direct effects on the States, on the relationship between the national government and the States, or on the distribution of power and responsibilities among the various levels of government." Under Executive Order 13132, EPA may not issue a regulation that has federalism implications, that imposes substantial direct compliance costs, and that is not required by statute, unless the Federal government provides the funds necessary to pay the direct compliance costs incurred by State and local governments, or EPA consults with State and local officials early in the process of developing the proposed regulation. The EPA also may not issue a regulation that has federalism implications and that preempts State law unless the Agency consults with State and local officials early in the process of developing the proposed regulation.

If EPA complies by consulting, Executive Order 13132 requires EPA to provide to OMB, in a separately identified section of the preamble to the rule, a federalism summary impact statement (FSIS). The FSIS must include a description of the extent of EPA's prior consultation with State and local officials, a summary of the nature of their concerns and the Agency's position supporting the need to issue the regulation, and a statement of the extent to which the concerns of State and local officials have been met. Also, when EPA transmits a draft final rule with federalism implications to OMB for review pursuant to Executive Order 12866, EPA must include a certification from the Agency's Federalism Official stating that EPA has met the requirements of Executive Order 13132 in a meaningful and timely manner.

This final rule will not have substantial direct effects on the States, on the relationship between the national government and the States, or on the distribution of power and responsibilities among the various levels of government, as specified in Executive Order 13132. Thus, the requirements of section 6 of the Executive Order do not apply to this rule.

E. Unfunded Mandates Reform Act

Title II of the Unfunded Mandates Reform Act of 1995 (UMRA), Pub. L. 104–4, establishes requirements for Federal agencies to assess the effects of their regulatory actions on State, local, and tribal governments and the private sector. Under section 202 of the UMRA, EPA generally must prepare a written statement, including a cost-benefit analysis, for proposed and final rules with "Federal mandates" that may result in expenditures by State, local, and tribal governments, in the aggregate, or by the private sector, of $100 million or more in any 1 year. Before promulgating an EPA rule for which a written statement is needed, section 205 of the UMRA generally requires EPA to identify the least costly, most cost-effective, or least burdensome alternative that achieves the objective of the rule. The provisions of section 205 do not apply when they are inconsistent with applicable law. Moreover, section 205 allows EPA to adopt an alternative other than the least costly, most cost-effective, or least burdensome alternative if the Administrator publishes with the final rule an explanation why that alternative was not adopted. Before EPA establishes any regulatory requirements that may significantly or uniquely affect small governments, including tribal governments, it must have developed under section 203 of the UMRA a small government agency plan. The plan must provide for notifying potentially affected small governments, enabling officials of affected small governments to have meaningful and timely input in the development of EPA regulatory proposals with significant Federal intergovernmental mandates, and informing, educating, and advising small governments on compliance with the regulatory requirements.

The EPA has determined that this rule does not include a Federal mandate that may result in expenditures of $100 million or more for State, local, or tribal governments, in the aggregate, or to the private sector in any 1 year. The maximum total annual cost of this rule for any year has been estimated to be less than $3 million. Thus, today's rule is not subject to the requirements of sections 202 and 205 of the UMRA. In addition, EPA has determined that this rule contains no regulatory requirements that might significantly or uniquely affect small governments since it does not impose any obligations on such governments. Therefore, today's final rule is not subject to the requirements of section 203 of the UMRA.

F. Regulatory Flexibility

After considering the economic impacts of today's final rule on small entities, EPA has determined that this action will not have a significant economic impact on a substantial number of small entities and that it is not necessary to prepare a regulatory flexibility analysis in connection with this final rule. We have determined that of the twenty affected firms, only six are small businesses. The mean annual cost as a percentages of an affected small firm sales will be much less than 1 percent (0.08 percent), and no higher than 0.38 percent for any affected small firm

Although this final rule will not have a significant economic impact on a substantial number of small entities, EPA nonetheless has tried to reduce the impact of this rule on small entities. In order to minimize the impact of the rule for leaking equipment, we have exempted firms producing less than 881 tpy (800 Mg/yr) from complying with requirements to have a leak detection and repair program.

G. Paperwork Reduction Act

The information collection requirements in this rule will be submitted for approval to the Office of Management and Budget under the Paperwork Reduction Act, 44 U.S.C. 3501 *et seq.* An Information Collection Request (ICR) document has been prepared by EPA (ICR No. 1856.02) and a copy may be obtained from Sandy Farmer by mail at OP Regulatory Information Division, U.S. Environmental Protection Agency (2137), 401 M Street SW, Washington, DC 20460, by email at farmer.sandy@epa.gov, or by calling (202) 260–2740. A copy may also be downloaded off the internet at http://www.epa.gov/icr. The information requirements are not effective until OMB approves them.

The information requirements are based on notification, recordkeeping, and reporting requirements in the NESHAP General Provisions (40 CFR part 63, subpart A), which are mandatory for all operators subject to national emission standards. These recordkeeping and reporting requirements are specifically authorized by section 114 of the Act (42 U.S.C. 7414). All information submitted to the EPA pursuant to the recordkeeping and reporting requirements for which a claim of confidentiality is made is

safeguarded according to Agency policies set forth in 40 CFR part 2, subpart B.

The rule requires maintenance inspections of the control devices but would not require any notifications or reports beyond those required by the General Provisions. The recordkeeping requirements require only the specific information needed to determine compliance.

The annual monitoring, reporting, and recordkeeping burden for this collection (averaged over the first 3 years after the effective date of the rule) is estimated to be 32,252 labor hours per year at a total annual cost of $1,441,539. This estimate includes a one-time performance test and report (with repeat tests where needed); one-time purchase and installation of bag leak detection systems; one-time submission of a startup, shutdown, and malfunction plan with semiannual reports for any event when the procedures in the plan were not followed; semiannual excess emission reports; maintenance inspections; notifications; and recordkeeping. Total capital/startup costs associated with the monitoring requirements over the 3-year period of the ICR are estimated at $80,000, with no operation and maintenance costs.

Burden means the total time, effort, or financial resources expended by persons to generate, maintain, retain, or disclose or provide information to or for a Federal agency. This includes the time needed to review instructions; develop, acquire, install, and utilize technology and systems for the purposes of collecting, validating, and verifying information, processing and maintaining information, and disclosing and providing information; adjust the existing ways to comply with any previously applicable instructions and requirements; train personnel to be able to respond to a collection of information; search data sources; complete and review the collection of information; and transmit or otherwise disclose the information.

An Agency may not conduct or sponsor, and a person is not required to respond to a collection of information unless it displays a currently valid OMB control number. The OMB control numbers for EPA's regulations are listed in 40 CFR Part 9 and 48 CFR Chapter 15. The OMB control number(s) for the information collection requirements in this rule will be listed in an amendment to 40 CFR part 9 or 48 CFR Chapter 15 in a subsequent **Federal Register** document after OMB approves the ICR.

H. National Technology Transfer and Advancement Act

As noted in the proposed rule, section 12(d) of the National Technology Transfer and Advancement Act of 1995 (NTTAA), Pub. L. 104–113, section 12(d) (15 U.S.C. 272 note), directs EPA to use voluntary consensus standards in its regulatory activities unless to do so would be inconsistent with applicable law or otherwise impractical. Voluntary consensus standards are technical standards (e.g., material specifications, test method, sampling procedures, and business practices) that are developed or adopted by one or more voluntary consensus standards bodies. The NTTAA directs EPA to provide Congress, through OMB, explanations when the Agency decides not to use available and applicable voluntary consensus standards.

This rulemaking involves technical standards. Therefore, the Agency conducted a search to identify potentially applicable voluntary consensus standards. However, we identified no such standards, and none were brought to our attention in comments. Therefore, we have decided to retain the standards in the proposed rule.

I. Congressional Review Act

The Congressional Review Act, 5 U.S.C. 801, *et seq.*, as added by the SBREFA of 1996, generally provides that before a rule may take effect, the agency promulgating the rule must submit a rule report, which includes a copy of the rule, to each House of the Congress and to the Comptroller General of the United States. Therefore, EPA will submit a report containing this rule and other required information to the United States Senate, the United States House of Representatives, and the Comptroller General of the United States prior to publication of the rule in the **Federal Register**. A "major rule" cannot take effect until 60 days after it is published in the **Federal Register**. This rule is not a "major rule" as defined by 5 U.S.C. 804(2). This rule will be effective January 20, 2000.

List of Subjects in 40 CFR Part 63

Environmental protection, Administrative practice and procedure, Air pollution control, Amino/phenolic resins production, Hazardous substances, Reporting and recordkeeping requirements.

Dated: December 15, 1999.

Carol M. Browner,

Administrator.

For the reasons set out in the preamble, title 40, chapter I, part 63 of the Code of Federal Regulations is amended as follows:

PART 63—[AMENDED]

1. The authority citation for part 63 continues to read as follows:

Authority: 42 U.S.C. 7401, *et seq.*

2. Part 63 is amended by adding subpart OOO to read as follows:

Subpart OOO—National Emission Standards for Hazardous Air Pollutant Emissions: Manufacture of Amino/Phenolic Resins

Sec.

63.1400 Applicability and designation of affected sources.
63.1401 Compliance schedule.
63.1402 Definitions.
63.1403 Emission standards.
63.1404 Storage vessel provisions.
63.1405 Continuous process vent provisions.
63.1406 Reactor batch process vent provisions.
63.1407 Non-reactor batch process vent provisions.
63.1408 Aggregate batch vent stream provisions.
63.1409 Heat exchange system provisions.
63.1410 Equipment leak provisions.
63.1411 [Reserved]
63.1412 Continuous process vent applicability assessment procedures and methods.
63.1413 Compliance demonstration procedures.
63.1414 Test methods and emission estimation equations.
63.1415 Monitoring requirements.
63.1416 Recordkeeping requirements.
63.1417 Reporting requirements.
63.1418 [Reserved]
63.1419 Delegation of authority.
Table 1 to Subpart OOO of Part 63-Applicability of General Provisions to Subpart OOO Affected Sources
Table 2 to Subpart OOO of Part 63—Known Organic Hazardous Air Pollutants (HAP) From the Manufacture of Amino/Phenolic Resins
Table 3 to Subpart OOO of Part 63—Batch Process Vent Monitoring Requirements
Table 4 to Subpart OOO of Part 63—Operating Parameter Levels
Table 5 to Subpart OOO of Part 63—Reports Required by This Subpart
Table 6 to Subpart OOO of Part 63—Coefficients for Total Resource Effectiveness

§ 63.1400 Applicability and designation of affected sources.

(a) *Applicability.* The provisions of this subpart apply to the owner or operator of processes that produce amino/phenolic resins and that are located at a plant site that is a major source as defined in § 63.2.

(b) *Affected source.* The affected source is:

(1) The total of all amino/phenolic resin process units (APPU);

(2) The associated heat exchange systems;

(3) Equipment required by, or utilized as a method of compliance with, this subpart which may include control devices and recovery devices;

(4) Equipment that does not contain organic hazardous air pollutants (HAPs) and is located within an APPU that is part of an affected source;

(5) Vessels and equipment storing and/or handling material that contain no organic HAP and/or organic HAP as impurities only;

(6) Equipment that is intended to operate in organic HAP service for less than 300 hours during the calendar year;

(7) Each waste management unit; and

(8) Maintenance wastewater.

(c) *Existing affected source.* The affected source to which the existing source provisions of this subpart apply is defined in paragraph (b) of this section.

(d) *New affected source.* The affected source to which the new source provisions of this subpart apply is:

(1) Each affected source defined in paragraph (b) of this section that commences construction or reconstruction after December 14, 1998;

(2) Each additional group of one or more APPU and associated heat exchange systems that has the potential to emit 10 tons per year or more of any organic HAP or 25 tons per year or more of any combination of organic HAP that commences construction after December 14, 1998; or

(3) Each group of one or more process units and associated heat exchange systems that are converted to APPUs after December 14, 1998, that has the potential to emit 10 tons per year or more of any organic HAP or 25 tons per year or more of any combination of organic HAP.

(e) *APPUs without organic HAP.* An APPU that is part of an affected source, as defined in paragraph (c) or (d) of this section, but that does not use or manufacture any organic HAP, is not subject to any other provisions of this subpart and is not required to comply with the provisions of subpart A of this part. When requested by the Administrator, the owner or operator shall demonstrate that the APPU does not use or manufacture any organic HAP. Types of information that could document this determination include, but are not limited to, records of chemicals purchased for the process, analyses of process stream composition, engineering calculations, or process knowledge.

(f) *Exemption from equipment leak provisions.* Affected sources with actual annual production of amino/phenolic resin equal to or less than 800 megagrams per year (Mg/yr) for the 12-month period preceding December 14, 1998 are exempt from the equipment leak provisions specified in § 63.1410. The owner or operator utilizing this exemption shall recheck the actual annual production of amino/phenolic resins for each 12-month period following December 14, 1998. The beginning of each 12-month period shall be the anniversary of December 14, 1998. If the actual annual production of amino/phenolic resins is greater than 800 Mg/yr for any 12-month period, the owner or operator shall comply with § 63.1410 for the life of the affected source or until the affected source is no longer subject to the provisions of this subpart.

(g) *Primary product determination and applicability.* For purposes of this paragraph, amino resins and phenolic resins shall be considered to be the same product and production time or production mass of amino and phenolic resins shall be combined for purposes of determining the primary product under this paragraph (g). If the owner or operator determines that a process unit is not an APPU under paragraphs (g)(1) through (4) of this section, the owner or operator shall, when requested by the Administrator, demonstrate that the process unit is not an APPU.

(1) *Applicability determinations for process units producing multiple products.* A process unit that produces more than one intended product at the same time is an APPU if amino/phenolic resin production accounts for the greatest percent of the annual design capacity on a mass basis. If a process unit has the same annual design capacity on a mass basis for two or more products, the process unit shall be an APPU if amino/phenolic resins are one of those products.

(2) *Flexible operations process unit determination based on operating time.* A flexible operations process unit is an APPU if amino/phenolic resins will be produced for the greatest operating time over the 5 years following December 14, 1998 at existing process units, or for the first year after the process unit begins production of any product for new process units.

(3) *Flexible operations process unit determination based on mass production basis.* A flexible operations process unit that will manufacture multiple products equally based on operating time is an APPU if amino/phenolic resins account for the greatest percentage of the expected production on a mass basis over the 5 years following December 14, 1998 at existing process units, or for the first year after the process unit begins production of any product for new process units.

(4) *Flexible operations process unit default determination.* If the owner or operator cannot determine whether or not amino/phenolic resins are the primary product of a flexible operations process unit in accordance with paragraphs (g)(2) and (3) of this section, the flexible operations process unit shall be designated as an APPU if amino/phenolic resins were produced for 5 percent or greater of the total operating time since December 14, 1998 for existing process units. The flexible operations process unit shall be designated as an APPU if the owner or operator anticipates that amino/phenolic resins will be manufactured in the flexible operations process unit at any time in the first year after the date the unit begins production of any product for new process units.

(5) *Annual applicability determination for non-APPUs that have produced amino/phenolic resins.* Once per year beginning December 14, 2003, the owner or operator of each flexible operations process unit that is not designated as an APPU, but that has produced amino/phenolic resins at any time in the preceding 5-year period or since the date that the unit began production of any product, whichever is shorter, shall perform an evaluation to determine whether the process unit has become an APPU. A flexible operations process unit has become an APPU if amino/phenolic resins were produced for the greatest operating time over the preceding 5-year period or since the date that the process unit began production of any product, whichever is shorter.

(6) *Applicability determination for non-APPUs that have not produced amino/phenolic resins.* The owner or operator that anticipates the production of amino/phenolic resins in a process unit that is not designated as an APPU, and in which no amino/phenolic resins have been produced in the previous 5-year period or since the date that the process unit began production of any product, whichever is shorter, shall determine if the process unit will become an APPU. The owner or operator shall use the procedures in paragraphs (g)(1) through (4) of this section to determine if the process unit is designated as an APPU, with the following exception: for existing process units, production shall be projected for the 5 years following the date that the owner or operator anticipates initiating the production of amino/phenolic

resins, instead of the 5 years following December 14, 1998.

(7) *Redetermination of applicability to APPU that are flexible operations process units.* Whenever changes in production occur that could reasonably be expected to cause a flexible operations process unit to no longer be an APPU (*i.e.*, amino/phenolic resins will no longer be the primary product according to the determination procedures in paragraphs (g)(2) through (4) of this section), the owner or operator shall reevaluate the status of the process unit as an APPU. A flexible operations process unit has ceased to be an APPU subject to this subpart if the following criteria are met:

(i) If amino/phenolic resins were not produced for the greatest operating time over the preceding 5-year period or since the date that the process unit began production of any product, whichever is shorter;

(ii) If the new primary product, which is not amino/phenolic resins, is subject to another subpart of this part; and

(iii) If the owner or operator has notified the Administrator of the pending change in status for the flexible operations process unit, as specified in § 63.1417(h)(4).

(8) *APPU terminating production of all amino/phenolic resins.* If an APPU terminates the production of all amino/phenolic resins and does not anticipate the production of any amino/phenolic resins in the future, the process unit is no longer an APPU and is not subject to this subpart after notification is made to the Administrator, as specified in § 63.1417(h)(4).

(h) *Storage vessel applicability determination.* The owner or operator of a storage vessel at a new affected source shall determine assignment to a process unit as follows:

(1) If a storage vessel is already subject to another subpart of part 63 on January 20, 2000, said storage vessel shall continue to be assigned to the process unit subject to the other subpart.

(2) If a storage vessel is dedicated to a single process unit, the storage vessel shall be assigned to that process unit.

(3) If a storage vessel is shared among process units, then the storage vessel shall be assigned to that process unit located on the same plant site as the storage vessel that has the greatest input into or output from the storage vessel (i.e., said process unit has the predominant use of the storage vessel).

(4) If predominant use cannot be determined for a storage vessel that is shared among process units, and if one or more of those process units is an APPU subject to this subpart, the storage vessel shall be assigned to any of the APPUs.

(5) [Reserved]

(6) If the predominant use of a storage vessel varies from year to year, then predominant use shall be determined based on the use as follows:

(i) For existing affected sources, use shall be determined based on the following:

(A) The year preceding January 20, 2000; or

(B) The expected use for the 5 years following January 20, 2000.

(ii) For new affected sources, use shall be determined based on the first 5 years after initial start-up.

(7) Where the storage vessel is located in a tank farm (including a marine tank farm), the assignment of the storage vessel shall be determined according to paragraphs (h)(7)(i) and (ii) of this section. Only those storage vessels where a portion or all of the input into or output from the storage vessel is hardpiped directly to one or more process units are covered by this paragraph.

(i) The storage vessel is assigned to a process unit if the product or raw material entering or leaving the process unit flows directly into (or from) the storage vessel in the tank farm without passing through any intervening storage vessel. An intervening storage vessel means a storage vessel connected by hardpiping both to the process unit and to the storage vessel in the tank farm.

(ii) If there are two or more process units that meet the criteria of paragraph (h)(7)(i) of this section with respect to a storage vessel, the storage vessel shall be assigned to one of those process units according to the provisions of paragraphs (h)(3) through (6) of this section.

(8) If the storage vessel begins receiving material from (or sending material to) a process unit that was not included in the initial determination, or ceases to receive material from (or send material to) a process unit, the owner or operator shall reevaluate the applicability of this subpart to the storage vessel according to the procedures in paragraphs (h)(3) through (7) of this section.

(i) *Applicability of other subparts to this subpart.* Paragraphs (i)(1) through (5) describe the applicability of other subparts to this subpart.

(1) After the compliance dates specified in this section, a storage vessel that is assigned to an affected source subject to this subpart that is also subject to and complying with the provisions of 40 CFR part 60, subpart Kb, shall continue to comply with 40 CFR part 60, subpart Kb. After the compliance dates specified in this section, a storage vessel that is assigned to an affected source subject to this subpart that is also subject to the provisions of 40 CFR part 60, subpart Kb, but the owner or operator has not been required to apply controls as part of complying with 40 CFR part 60, subpart Kb, is required to comply only with the provisions of this subpart. After the compliance dates specified in this section, said storage vessel shall no longer be subject to 40 CFR part 60, subpart Kb.

(2) Affected sources subject to this subpart that are also subject to the provisions of subpart Q of this part shall comply with both subparts.

(3) After the compliance dates specified in this section, an affected source subject to this subpart that is also subject to the provisions of 40 CFR part 60, subpart VV, or the provisions of subpart H of this part, is required to comply only with the provisions of this subpart. After the compliance dates specified in this section, said source shall no longer be subject to 40 CFR part 60, subpart VV, or subpart H of this part, as appropriate.

(4) After the applicable compliance date specified in this subpart, if a heat exchange system subject to this subpart is also subject to a standard identified in paragraph (i)(4)(i) or (ii) of this section, compliance with the applicable provisions of the standard identified in paragraph (i)(4)(i) or (ii) of this section shall constitute compliance with the applicable provisions of this subpart with respect to that heat exchange system.

(i) Subpart F of this part.

(ii) A subpart of this part that requires compliance with § 63.104 (e.g., subpart U of this part).

(5) After the compliance dates specified in this subpart, if any combustion device, recovery device or recapture device subject to this subpart is also subject to monitoring, recordkeeping, and reporting requirements in 40 CFR part 264, subparts AA, BB, or CC, or is subject to monitoring and recordkeeping requirements in 40 CFR part 265, subparts AA, BB, or CC, and the owner or operator complies with the periodic reporting requirements under 40 CFR part 264, subparts AA, BB, or CC, that would apply to the device if the facility had final-permitted status, the owner or operator may elect to comply either with the monitoring, recordkeeping and reporting requirements of this subpart, or with the monitoring, recordkeeping and reporting requirements in 40 CFR parts 264 and/or 265, as described in this paragraph, which shall constitute

compliance with the monitoring, recordkeeping and reporting requirements of this subpart. If the owner or operator elects to comply with the monitoring, recordkeeping, and reporting requirements in 40 CFR parts 264 and/or 265, the owner or operator shall report all information required by § 63.1417(f), Periodic Reports, as part of complying with the requirements of 40 CFR parts 264 and/or 265.

(j) *Applicability of General Provisions.* Table 1 of this subpart specifies the provisions of subpart A of this part that apply and do not apply to owners and operators of affected sources subject to this subpart.

(k) *Applicability of this subpart during periods of start-up, shutdown, malfunction, or non-operation.* Paragraphs (k)(1) through (4) of this section shall be followed during periods of start-up, shutdown, malfunction, or non-operation of the affected source or any part thereof.

(1) The emission limitations set forth in this subpart and the emission limitations referred to in this subpart shall apply at all times except during periods of non-operation of the affected source (or specific portion thereof) resulting in cessation of the emissions to which this subpart applies. The emission limitations of this subpart and the emission limitations referred to in this subpart shall not apply during periods of start-up, shutdown, or malfunction. During periods of start-up, shutdown, or malfunction, the owner or operator shall follow the applicable provisions of the start-up, shutdown, and malfunction plan required by § 63.6(e)(3). However, if a start-up, shutdown, malfunction, or period of non-operation of one portion of an affected source does not affect the ability of a particular emission point to comply with the emission limitations to which it is subject, then that emission point shall still be required to comply with the applicable emission limitations of this subpart during the start-up, shutdown, malfunction, or period of non-operation. For example, if there is an overpressure in the reactor area, a storage vessel that is part of the affected source would still be required to be controlled in accordance with § 63.1404.

(2) The emission limitations set forth in 40 CFR part 63, subpart UU, as referred to in § 63.1410, shall apply at all times except during periods of non-operation of the affected source (or specific portion thereof) in which the lines are drained and depressurized resulting in cessation of the emissions to which § 63.1410 applies, or during periods of start-up, shutdown, malfuncton, or process unit shutdown. During periods of start-up, shutdown, malfunction, or process unit shutdown, the owner or operator shall follow the applicable provisions of the start-up, shutdown, and malfunction plan required by § 63.6(e)(3).

(3) The owner or operator shall not shut down items of equipment that are required or utilized for compliance with this subpart during periods of start-up, shutdown, or malfunction; or during times when emissions are being routed to such items of equipment if the shutdown would contravene requirements of this subpart applicable to such items of equipment. This paragraph does not apply if the item of equipment is malfunctioning. This paragraph also does not apply if the owner or operator shuts down the compliance equipment (other than monitoring systems) to avoid damage due to a contemporaneous start-up, shutdown, or malfunction of the affected source or portion thereof. If the owner or operator has reason to believe that monitoring equipment would be damaged due to a contemporaneous start-up, shutdown, or malfunction of the affected source or portion thereof, the owner or operator shall provide documentation supporting such a claim in the Precompliance Report as provided in § 63.1417(d)(9) or in a supplement to the Precompliance Report. Once approved by the Administrator in accordance with § 63.1417(d)(9), the provision for ceasing to collect, during a start-up, shutdown, or malfunction, monitoring data that would otherwise be required by the provisions of this subpart shall be incorporated into the start-up, shutdown, malfunction plan for the affected source, as stated in paragraph (k) of this section.

(4) During start-ups, shutdowns, and malfunctions when the emission limitations of this subpart do not apply pursuant to paragraphs (k)(1) through (3) of this section, the owner or operator shall implement, to the extent reasonably available, measures to prevent or minimize excess emissions to the extent practical. For purposes of this paragraph, the term "excess emissions" means emissions in excess of those that would have occurred if there were no start-up, shutdown, or malfunction and the owner or operator complied with the relevant provisions of this subpart. The measures to be taken shall be identified in the applicable start-up, shutdown, and malfunction plan, and may include, but are not limited to, air pollution control technologies, recovery technologies, work practices, pollution prevention, monitoring, and/or changes in the manner of operation of the affected source. Back-up control devices are not required, but may be used if available.

§ 63.1401 Compliance schedule.

(a) New affected sources that commence construction or reconstruction after December 14, 1998, shall be in compliance with this subpart upon initial start-up or January 20, 2000, whichever is later.

(b) Existing affected sources shall be in compliance with this subpart no later than 3 years after January 20, 2000.

(c) If an affected source using the exemption provided in § 63.1400(f) has an actual annual production of amino/phenolic resins exceeding 800 Mg/yr for any 12-month period, the owner or operator shall comply with the provisions of § 63.1410 for the affected source within 3 years. The starting point for the 3-year compliance time period shall be the end of the 12-month period in which actual annual production for amino/phenolic resins exceeds 800 Mg/yr.

(d) Pursuant to section 112(i)(3)(B) of the Clean Air Act, an owner or operator may request an extension allowing the existing affected source up to 1 additional year to comply with section 112(d) standards. For purposes of this subpart, a request for an extension shall be submitted to the permitting authority as part of the operating permit application or to the Administrator as a separate submittal or as part of the Precompliance Report.

(1) Requests for extensions shall be submitted no later than 120 days prior to the compliance dates specified in paragraphs (a) and (b) of this section and shall include the data described in § 63.6(i)(6)(i)(A), (B), and (D). The dates specified in § 63.6(i) for submittal of requests for extensions shall not apply to this subpart.

(2) An owner or operator may submit a compliance extension request less than 120 days prior to the compliance dates specified in paragraphs (a) and (b) of this section provided that the need for the compliance extension arose after that date, and the need arose due to circumstances beyond reasonable control of the owner or operator. This request shall include, in addition to the information specified in § 63.6(i)(6)(i)(A), (B), and (D), a statement of the reasons additional time is needed and the date when the owner or operator first learned of the circumstances necessitating a request for compliance extension.

(e) All terms in this subpart that define a period of time for completion of required tasks (*e.g.*, weekly, monthly quarterly, annual), unless specified

otherwise, refer to the standard calendar periods.

(1) Notwithstanding time periods specified in this subpart for completion of required tasks, such time periods may be changed by mutual agreement between the owner or operator and the Administrator, as specified in subpart A of this part (*e.g.*, a period could begin on the compliance date or another date, rather than on the first day of the standard calendar period). For each time period that is changed by agreement, the revised period shall remain in effect until it is changed. A new request is not necessary for each recurring period.

(2) Where the period specified for compliance is a standard calendar period, if the initial compliance date occurs after the beginning of the period, compliance shall be required according to the schedule specified in paragraph (e)(2)(i) or (ii) of this section, as appropriate:

(i) Compliance shall be required before the end of the standard calendar period within which the compliance deadline occurs, if there remain at least 3 days for tasks that must be performed weekly, at least 2 weeks for tasks that must be performed monthly, at least 1 month for tasks that must be performed each quarter, or at least 3 months for tasks that must be performed annually; or

(ii) In all other cases, compliance shall be required before the end of the first full standard calendar period after the period within which the initial compliance deadline occurs.

(3) In all instances where a provision of this subpart requires completion of a task during each of multiple successive periods, an owner or operator may perform the required task at any time during the specified period, provided that the task is conducted at a reasonable interval after completion of the task during the previous period.

§ 63.1402 Definitions.

(a) The following terms used in this subpart shall have the meaning given them in §§ 63.2, 63.101, 63.111, and 63.161 as specified after each term:

Act (§ 63.2)
Administrator (§ 63.2)
Annual average concentration (§ 63.111)
Annual average flow rate (§ 63.111)
Automated monitoring and recording system (§ 63.111)
Boiler (§ 63.111)
Bottoms receiver (§ 63.161)
By compound (§ 63.111)
By-product (§ 63.101)
Car-seal (§ 63.111)
Closed-vent system (§ 63.111)
Combustion device (§ 63.111)
Commenced (§ 63.2)
Compliance date (§ 63.2)
Connector (§ 63.161)
Construction (§ 63.2)
Continuous monitoring system (§ 63.2)
Distillation unit (§ 63.111)
Duct work (§ 63.161)
Emission standard (§ 63.2)
EPA (§ 63.2)
External floating roof (§ 63.111)
First attempt at repair (§ 63.111)
Flame zone (§ 63.111)
Floating roof (§ 63.111)
Flow indicator (§ 63.111)
Fuel gas (§ 63.101)
Fuel gas system (§ 63.101)
Hard-piping (§ 63.111)
Hazardous air pollutant (§ 63.2)
Impurity (§ 63.101)
Inorganic hazardous air pollutant service (§ 63.161)
Incinerator (§ 63.111)
Instrumentation system (§ 63.161)
Internal floating roof (§ 63.111)
Lesser quantity (§ 63.2)
Major source (§ 63.2)
Open-ended valve or line (§ 63.161)
Operating permit (§ 63.101)
Organic monitoring device (§ 63.111)
Owner or operator (§ 63.2)
Performance evaluation (§ 63.2)
Performance test (§ 63.2)
Permitting authority (§ 63.2)
Plant site (§ 63.101)
Potential to emit (§ 63.2)
Primary fuel (§ 63.111)
Process heater (§ 63.111)
Process unit shutdown (§ 63.161)
Process wastewater (§ 63.111)
Reactor (§ 63.111)
Reconstruction (§ 63.2)
Routed to a process or route to a process (§ 63.161)
Run (§ 63.2)
Secondary fuel (§ 63.111)
Sensor (§ 63.161)
Specific gravity monitoring device (§ 63.111)
Start-up, shutdown, and malfunction plan (§ 63.101)
State (§ 63.2)
Surge control vessel (§ 63.161)
Temperature monitoring device (§ 63.111)
Test method (§ 63.2)
Total resource effectiveness (TRE) index value (§ 63.111)
Treatment process (§ 63.111)
Unit operation (§ 63.101)
Visible emission (§ 63.2)

(b) All other terms used in this subpart shall have the meaning given them in this section. If a term is defined in §§ 63.2, 63.101, 63.111, or 63.161 or defined in 40 CFR part 63, subparts SS, UU, or WW and in this section, it shall have the meaning given in this section for purposes of this subpart.

Aggregate batch vent stream means a process vent containing emissions from at least one reactor batch process vent and at least one additional reactor or non-reactor batch process vent where the emissions are ducted, hardpiped, or otherwise connected together for a continuous flow.

Amino resin means a thermoset resin produced through the reaction of formaldehyde, or a formaldehyde containing solution (e.g., aqueous formaldehyde), with compound(s) that contain the amino group; these compounds include melamine, urea, and urea derivatives. Formaldehyde substitutes are exclusively aldehydes.

Amino/phenolic resin means one or both of the following:

(1) Amino resin; or

(2) Phenolic resin.

Amino/phenolic resin process unit (APPU) means a collection of equipment assembled and connected by hardpiping or ductwork used to process raw materials and to manufacture an amino/phenolic resin as its primary product. This collection of equipment includes unit operations; process vents; storage vessels, as determined in § 63.1400(h); and the equipment that is subject to the equipment leak provisions as specified in § 63.1410. Utilities, lines and equipment not containing process fluids, and other non-process lines, such as heating and cooling systems which do not combine their materials with those in the processes they serve, are not part of the amino/phenolic resin process unit. An amino/phenolic resin process unit consists of more than one unit operation.

Batch cycle means the operational step or steps, from start to finish, that occur as part of a batch unit operation.

Batch emission episode means a discrete emission venting episode associated with a single batch unit operation. Multiple batch emission episodes may occur from a single batch unit operation.

Batch mode means the discontinuous bulk movement of material through a unit operation. Mass, temperature, concentration, and other properties may vary with time. For a unit operation operated in a batch mode (i.e., batch unit operation), the addition of material and withdrawal of material do not typically occur simultaneously.

Batch process vent means a process vent from a batch unit operation within an affected source. Batch process vents are either reactor batch process vents or non-reactor batch process vents.

Batch unit operation means a unit operation operated in a batch mode.

Block means the time period that comprises a single batch cycle.

Combustion device burner means a device designed to mix and ignite fuel and air to provide a flame to heat and oxidize waste organic vapors in a combustion device.

Continuous mode means the continuous movement of material through a unit operation. Mass, temperature, concentration, and other

properties typically approach steady-state conditions. For a unit operation operated in a continuous mode (*i.e.*, continuous unit operation), the simultaneous addition of raw material and withdrawal of product is typical.

Continuous process vent means a process vent from a continuous unit operation within an affected source. Process vents that are serving as control devices are not subject to additional control requirements.

Continuous record means documentation, either in hard copy or computer readable form, of data values measured at least once every 15 minutes and recorded at the frequency specified in § 63.1416(c) or (h).

Continuous recorder means a data recording device that either records an instantaneous data value at least once every 15 minutes or records 1 hour or more frequent block average values.

Continuous unit operation means a unit operation operated in a continuous mode.

Control device means any combustion device, recovery device, or recapture device. Such equipment includes, but is not limited to, absorbers, carbon adsorbers, condensers, incinerators, flares, boilers, and process heaters. For continuous process vents, recapture devices are considered control devices but recovery devices are not considered control devices. Condensers operating as process condensers are not considered control devices. For a condenser that sometimes operates as a process condenser to be considered a control device, it shall not be operating as a process condenser for a given batch emission episode, and it shall recycle of the recovered material within the process.

Control technology means any process modification or use of equipment that reduces organic HAP emissions. Examples include, but are not limited to, product reformulation to reduce solvent content and/or use, batch cycle time reduction to reduce the duration of emissions, reduction of nitrogen purge rate, and the lowering of process condenser coolant temperatures.

Controlled organic HAP emissions means the quantity of organic HAP discharged to the atmosphere from a control device.

Emission point means an individual continuous process vent, batch process vent, aggregate batch vent stream, storage vessel, equipment leak, or heat exchange system.

Equipment means , for the purposes of the provisions in § 63.1410, each pump, compressor, agitator, pressure relief device, sampling connection system, open-ended valve or line, valve, connector, and instrumentation system in organic HAP service; and any control devices or systems required by § 63.1410. For purposes of this subpart, surge control vessels and bottom receivers are not equipment for purposes of regulating equipment leak emissions. Surge control vessels and bottoms receivers are regulated as non-reactor batch process vents for the purposes of this subpart.

Equipment leak means emissions of organic HAP from a pump, compressor, agitator, pressure relief device, sampling connection system, open-ended valve or line, valve, or instrumentation system that either contains or contacts a fluid (liquid or gas) that is at least 5 percent by weight of total organic HAP.

Existing process unit means any process unit that is not a new process unit.

Flexible operations process unit means a process unit that periodically manufactures different chemical products, polymers, or resins by alternating raw materials or operating conditions. These units are also referred to as campaign plants or blocked operations.

Heat exchange system means any cooling tower system or once-through cooling water system (e.g., river or pond water) designed and intended to operate to not allow contact between the cooling medium and process fluid or gases (*i.e.*, a noncontact system). A heat exchange system may include more than one heat exchanger and may include recirculating or once-through cooling systems.

Highest-HAP recipe for a product means the recipe of the product with the highest total mass of organic HAP charged to the reactor during the production of a single batch of product.

Initial start-up means the first time a new or reconstructed affected source begins production, or, for equipment added or changed, the first time the equipment is put into operation. Initial start-up does not include operation solely for testing equipment. Initial start-up does not include subsequent start-ups of an affected source or portion thereof following malfunctions or shutdowns, or following changes in product for flexible operation process units, or following recharging of equipment in batch operation. Further, for purposes of §§ 63.1401 and 63.1410, initial start-up does not include subsequent start-ups of affected sources or portions thereof following malfunctions or process unit shutdowns.

Inprocess recycling means a recycling operation in which recovered material is used by a unit operation within the same affected source. It is not necessary for recovered material to be used by the unit operation from which they were recovered.

Maintenance wastewater means wastewater generated by the draining of process fluid from components in the APPU into an individual drain system prior to or during maintenance activities. Maintenance wastewater can be generated during planned and unplanned shutdowns and during periods not associated with a shutdown. Examples of activities that can generate maintenance wastewaters include descaling of heat exchanger tubing bundles, cleaning of distillation column traps, draining of low legs and high point bleeds, draining of pumps into an individual drain system, and draining of portions of the APPU for repair. The generation of wastewater from the routine rinsing or washing of equipment in batch operation between batches is not maintenance wastewater for the purposes of this subpart.

Malfunction means any sudden, infrequent, and not reasonably preventable failure of air pollution control equipment or process equipment, or failure of a process to operate in a normal or usual manner, or opening of a safety device. Failures that are caused in part by poor maintenance or careless operation are not malfunctions.

Maximum representative operating conditions means, for purposes of testing or measurements required by § 63.1413, those conditions which reflect the highest organic HAP emissions reasonably expected to be vented to the control device or emitted to the atmosphere. For affected sources that produce the same product(s) using multiple recipes, the production of the highest-HAP recipe is reflective of maximum representative operating conditions.

Maximum true vapor pressure means the equilibrium partial pressure exerted by the total organic HAP in the stored liquid at the temperature equal to the highest calendar-month average of the liquid storage temperature for liquids stored above or below the ambient temperature, or at the local maximum monthly average temperature as reported by the National Weather Service for liquids stored at the ambient temperature, as determined:

(1) In accordance with methods described in American Petroleum Institute Publication 2517, Evaporative Loss From External Floating-Roof Tanks (incorporated by reference as specified in § 63.14); or

(2) As obtained from standard reference texts; or

(3) As determined by the American Society for Testing and Materials Method D2879–83 (incorporated by reference as specified in § 63.14); or

(4) Any other method approved by the Administrator.

Multicomponent system means, as used in conjunction with batch process vents, a stream whose liquid and/or vapor contains more than one compound.

Net heating value means the difference between the heat value of the recovered chemical stream and the minimum heat value required to ensure a stable flame in the combustion device. This difference must have a positive value when used in the context of "recovering chemicals for fuel value" (*e.g.*, in the definition of "recovery device" in this section).

New process unit means a process unit for which the construction or reconstruction commenced after December 14, 1998.

Non-reactor batch process vent means a batch process vent originating from a unit operation other than a reactor. Non-reactor batch process vents include, but are not limited to, batch process vents from filter presses, surge control vessels, bottoms receivers, weigh tanks, and distillation systems.

Non-solvent-based resin means an amino/phenolic resin manufactured without the use of a solvent as described in the definition of solvent-based resin.

On-site or *On site* means, with respect to records required to be maintained by this subpart or required by another subpart referenced by this subpart, records are stored at a location within a major source which encompasses the affected source. On-site includes, but is not limited to, storage at the affected source or APPU to which the records pertain, or storage in central files elsewhere at the major source.

Operating day means the period defined by the owner or operator in the Notification of Compliance Status required by § 63.1417(e). The operating day is the period for which daily average monitoring values and batch cycle daily average monitoring values are determined.

Organic hazardous air pollutant(s) (organic HAP) means one or more of the chemicals listed in Table 2 of this subpart or any other chemical which is:

(1) Knowingly produced or introduced into the manufacturing process other than as an impurity; and

(2) Listed in Table 2 of subpart F of this part.

Phenolic resin means a thermoset resin that is a condensation product of formaldehyde and phenol, or a formaldehyde substitute and/or a phenol substitute. Substitutes for formaldehyde are exclusively aldehydes and include acetaldehyde or furfuraldehyde. Substitutes for phenol include other phenolic starting compounds such as cresols, xylenols, p-tert-butylphenol, p-phenylphenol, nonylphenol, and resorcinols.

Process condenser means a condenser functioning so as to recover material as an integral part of a unit operation(s). A process condenser shall support a vapor-to-liquid phase change for periods of equipment operation that are at or above the boiling or bubble point of substance(s) at the liquid surface. Examples of process condensers include distillation condensers, reflux condensers, and condensers used in stripping or flashing operations. In a series of condensers, all condensers up to and including the first condenser with an exit gas temperature below the boiling or bubble point of the substance(s) at the liquid surface are considered to be process condensers. All condensers in line prior to a vacuum source are considered process condensers when the vacuum source is being operated. A condenser may be a process condenser for some batch emission episodes and, when meeting certain conditions, may be a control device for other batch emission episodes.

Process unit means a collection of equipment assembled and connected by hardpiping or ductwork used to process raw materials and to manufacture a product.

Process vent means a gaseous emission stream from a unit operation where the gaseous emission stream is discharged to the atmosphere either directly or after passing through one or more control, recovery, or recapture devices. Unit operations that may have process vents are condensers, distillation units, reactors, or other unit operations within the APPU. Emission streams that are undiluted and uncontrolled containing less than 50 parts per million volume (ppmv) organic HAP, as determined through process knowledge that no organic HAP are present in the emission stream or using an engineering assessment as discussed in § 63.1414(d)(6); test data using the test methods specified in § 63.1414(a); or any other test method that has been validated according to the procedures in Method 301 of appendix A of this part are not considered process vents. Process vents exclude relief valve discharges, gaseous streams routed to a fuel gas system(s), and leaks from equipment regulated under § 63.1410. Process vents that are serving as control devices are not subject to additional control requirements.

Product means a resin, produced using the same monomers and varying in additives (e.g., initiators, terminators, etc.), catalysts, or in the relative proportions of monomers, that is manufactured by a process unit. With respect to resins, more than one recipe may be used to produce the same product. Product also means a chemical that is not a resin that is manufactured by a process unit. By-products, isolated intermediates, impurities, wastes, and trace contaminants are not considered products.

Reactor batch process vent means a batch process vent originating from a reactor.

Recapture device means an individual unit of equipment capable of and used for the purpose of recovering chemicals, but not normally for use, reuse, or sale. For example, a recapture device may recover chemicals primarily for disposal. Recapture devices include, but are not limited to, absorbers, carbon adsorbers, and condensers.

Recipe means a specific composition from among the range of possible compositions that may occur within a product, as defined in this section. A recipe is determined by the proportions of monomers and, if present, other reactants and additives that are used to make the recipe. For example, a methylated amino resin and a non-methylated amino resin are both different recipes of the same product, amino resin.

Recovery device means an individual unit of equipment capable of and normally used for the purpose of recovering chemicals for use, reuse, fuel value (i.e., net heating value); or for sale for use, reuse, or fuel value (i.e., net heating value). Examples of equipment that may be recovery devices include absorbers, carbon adsorbers, condensers, oil-water separators or organic-water separators, or organic removal devices such as decanters, strippers, or thin-film evaporation units. For the purposes of the monitoring, recordkeeping, or reporting requirements of this subpart, recapture devices are considered recovery devices.

Safety device means a closure device such as a pressure relief valve, frangible disc, fusible plug, or any other type of device which functions exclusively to prevent physical damage or permanent deformation to a unit or its air emission control equipment by venting gases or vapors directly to the atmosphere during unsafe conditions resulting from an unplanned, accidental, or emergency event. For the purposes of this subpart, a safety device is not used for routine

venting of gases or vapors from the vapor headspace underneath a cover such as during filling of the unit or to adjust the pressure in this vapor headspace in response to normal daily diurnal ambient temperature fluctuations. A safety device is designed to remain in a closed position during normal operations and open only when the internal pressure, or another relevant parameter, exceeds the device threshold setting applicable to the air emission control equipment as determined by the owner or operator based on manufacturer recommendations, applicable regulations, fire protection and prevention codes, standard engineering codes and practices, or other requirements for the safe handling of flammable, combustible, explosive, reactive, or hazardous materials.

Shutdown means for purposes including, but not limited to, periodic maintenance, replacement of equipment, or repair, the cessation of operation of an affected source, an APPU(s) within an affected source, or equipment required or used to comply with this subpart, or the emptying or degassing of a storage vessel. For purposes of the batch process vent provisions in §§ 63.1406 through 63.1408, the cessation of equipment in batch operations is not a shutdown, unless the equipment undergoes maintenance, is replaced, or is repaired.

Solvent-based resin means an amino/phenolic resin that consumes a solvent (*i.e.*, methanol, xylene) as a reactant in the resin producing reaction. The use of a solvent as a carrier (i.e., adding methanol to the product/water solution after the reaction is complete) does not meet this definition.

Start-up means the setting into operation of an affected source, an APPU(s) within an affected source, a unit operation within an affected source, or equipment required or used to comply with this subpart, or a storage vessel after emptying and degassing. For both continuous and batch unit operations, start-up includes initial start-up and operation solely for testing equipment. For both continuous and batch unit operations, start-up does not include the recharging of equipment in batch operation. For continuous unit operations, start-up includes transitional conditions due to changes in product for flexible operation process units. For batch unit operations, start-up does not include transitional conditions due to changes in product for flexible operation process units.

Steady-state conditions means that all variables (temperatures, pressures, volumes, flow rates, etc.) in a process do not vary significantly with time; minor fluctuations about constant mean values may occur.

Storage vessel means a tank or other vessel that is used to store liquids that contain one or more organic HAP. Storage vessels do not include:

(1) Vessels permanently attached to motor vehicles such as trucks, railcars, barges, or ships;

(2) Pressure vessels designed to operate in excess of 204.9 kilopascals and without emissions to the atmosphere;

(3) Vessels with capacities smaller than 38 cubic meters;

(4) Vessels and equipment storing and/or handling material that contains no organic HAP and/or organic HAP as impurities only;

(5) Wastewater storage tanks;

(6) Surge control vessels or bottoms receivers; and

(7) Vessels and equipment storing and/or handling amino/phenolic resin.

Supplemental combustion air means the air that is added to a vent stream after the vent stream leaves the unit operation. Air that is part of the vent stream as a result of the nature of the unit operation is not considered supplemental combustion air. Air required to operate combustion device burner(s) is not considered supplemental combustion air.

Uncontrolled organic HAP emissions means the organic HAP emitted from a unit operation prior to introduction of the emission stream into a control device. Uncontrolled HAP emissions are determined after any condenser that is operating as a process condenser. If an emission stream is not routed to a control device, uncontrolled organic HAP emissions are those organic HAP emissions released to the atmosphere.

Vent stream, as used in reference to batch process vents, aggregate batch vent streams, continuous process vents, and storage vessels, means the emissions from that emission point.

Waste management unit means the equipment, structure(s), and/or device(s) used to convey, store, treat, or dispose of wastewater streams or residuals. Examples of waste management units include: wastewater tanks, surface impoundments, individual drain systems, and biological wastewater treatment units. Examples of equipment that may be waste management units include containers, air flotation units, oil-water separators or organic-water separators, or organic removal devices such as decanters, strippers, or thin-film evaporation units. If such equipment is used for recovery, then it is part of an APPU and is not a waste management unit.

Wastewater is either a process wastewater or maintenance wastewater and means water that:

(1) Contains either:

(i) An annual average concentration of organic HAP, as indicated on Table 2 of this subpart, of at least 5 parts per million by weight and has an annual average flow rate of 0.02 liter per minute or greater; or

(ii) An annual average concentration of organic HAP, as indicated on Table 2 of this subpart, of at least 10,000 parts per million by weight at any flow rate.

(2) Is discarded from an APPU that is part of an affected source.

(3) Does not include:

(i) Stormwater from segregated sewers;

(ii) Water from fire-fighting and deluge systems in segregated sewers;

(iii) Spills;

(iv) Water from safety showers;

(v) Water from testing of deluge systems; and

(vi) Water from testing of firefighting systems.

Wastewater stream means a stream that contains wastewater as defined in this section.

§ 63.1403 Emission standards.

(a) *Provisions of this subpart.* Except as allowed under paragraph (b) of this section, the owner or operator of an affected source shall comply with the provisions of §§ 63.1404 through 63.1410, as appropriate. When emissions are vented to a control device or control technology as part of complying with this subpart, emissions shall be vented through a closed vent system meeting the requirements of 40 CFR part 63, subpart SS (national emission standards for closed vent systems, control devices, recovery devices).

(b) *Combined emission streams.* When emissions of different kinds (*e.g.*, emissions from continuous process vents, storage vessels, etc.) are combined at a new affected source, and at least one of the emission streams would be required by this subpart to apply controls in the absence of combination with other emission streams, the owner or operator shall comply with the requirements of paragraph (b)(1) or (2) of this section, as appropriate.

(1) For any combined vent stream that includes one or more aggregate batch vent streams, comply with the provisions for aggregate batch vent streams.

(2) For any combined vent stream that does not include one or more aggregate batch vent streams:

(i) Reactor batch process vents and non-reactor batch process vents shall

comply with the provisions for reactor batch process vents and non-reactor batch process vents, as appropriate.

(ii) The remaining emissions (*i.e.*, storage vessel and/or continuous process vent emissions) included in the combined vent stream shall comply the provisions for storage vessels when storage vessel emissions are included and shall comply with the provisions for continuous process vents in the absence of storage vessel emissions (*i.e.*, when only continuous process vents are included).

(c) *Compliance for flexible operations process units.* With the exceptions specified in paragraphs (c)(1) and (2) of this section, owners or operators of APPUs that are flexible operations process units shall comply with the provisions of this subpart at all times, regardless of the product being manufactured. Once it has been determined that an emission point requires control during manufacture of amino/phenolic resins, that emission point shall be controlled at all times regardless of the product being manufactured.

(1) When a flexible operations process unit is manufacturing a product in which no organic HAP are used or manufactured, the owner or operator is not required to comply with the provisions of this subpart or with the provisions of subpart A of this part during manufacture of that product. When requested by the Administrator, the owner or operator shall demonstrate that no organic HAP are used or manufactured.

(2) When a flexible operations process unit is manufacturing a product subject to subpart GGG of this part, the owner or operator is not required to comply with the provisions of this subpart during manufacture of that product (*i.e.*, a pharmaceutical).

§ 63.1404 Storage vessel provisions.

(a) *Emission standards.* For each storage vessel located at a new affected source that has a capacity of 50,000 gallons or greater and vapor pressure of 2.45 pounds per square inch absolute (psia) or greater or has a capacity of 90,000 gallons or greater and vapor pressure of 0.15 psia or greater, the owner or operator shall comply with either paragraph (a) (1) or (2) of this section. As an alternative to complying with paragraph (a) of this section, an owner or operator may comply with paragraph (b) of this section.

(1) Reduce emissions of total organic HAP by 95 weight-percent. Control shall be achieved by venting emissions through a closed vent system to any combination of control devices meeting the requirements of 40 CFR part 63, subpart SS (national emission standards for closed vent systems, control devices, recovery devices). When complying with the requirements of 40 CFR part 63, subpart SS, the following apply for purposes of this subpart:

(i) Design evaluations are allowed for control devices that control emission points with total emissions less than 10 tons of organic HAP per year before control (i.e., small control devices).

(ii) When 40 CFR part 63, subpart SS refers to specific test methods for the measurement of organic HAP concentration, the test methods presented in § 63.1414(a) shall be used.

(iii) The option to measure TOC instead of organic HAP, as a basis for demonstrating compliance, is not allowed.

(iv) Excused excursions are not allowed.

(v) The provisions in § 63.1403(b), rather than the provisions in § 63.982(f), are to be followed for combined vent streams.

(vi) When a scrubber is used as a control device, the owner or operator shall follow the guidance provided in this subpart for design evaluations or performance tests, as appropriate, and for monitoring, recordkeeping, and reporting.

(vii) When there are conflicts between the due dates for reports presented in 40 CFR part 63, subpart SS and this subpart, reports shall be submitted according to the due dates presented in this subpart.

(viii) When there are conflicts between the recordkeeping and reporting requirements presented in 40 CFR part 63, subpart SS and this subpart, the owner or operator shall either follow both sets of requirements (*i.e.*, follow the requirements in 40 CFR part 63, subpart SS for emission points covered by 40 CFR part 63, subpart SS and follow the requirements of this subpart for emission points covered by this subpart) or shall follow the set of requirements they prefer. If an owner or operator chooses to follow just one set of requirements, the owner or operator shall identify which set of requirements are being followed and which set of requirements are being disregarded in the appropriate report.

(2) Comply with the requirements of 40 CFR part 63, subpart WW (national emission standards for storage vessels (control level 2)). When complying with the requirements of 40 CFR part 63, subpart WW, the following apply for purposes of this subpart:

(i) When there are conflicts between the due dates for reports presented in 40 CFR part 63, subpart WW and this subpart, reports shall be submitted according to the due dates presented in this subpart.

(ii) When there are conflicts between the recordkeeping and reporting requirements presented in 40 CFR part 63, subpart WW and this subpart, the owner or operator shall either follow both sets of requirements (*i.e.*, follow the requirements in 40 CFR part 63, subpart WW for emission points covered by 40 CFR part 63, subpart WW and follow the requirements of this subpart for emission points covered by this subpart) or shall follow the set of requirements they prefer. If an owner or operator chooses to follow just one set of requirements, the owner or operator shall identify which set of requirements are being followed and which set of requirements are being disregarded in the appropriate report.

(b) *Alternative standard.* Vent all organic HAP emissions from a storage vessel meeting either of the capacity and vapor pressure criteria specified in paragraph (a) of this section to a combustion control device achieving an outlet organic HAP concentration of 20 ppmv or less or to a non-combustion control device achieving an outlet organic HAP concentration of 50 ppmv or less. Any storage vessels that are not vented to a control device meeting these conditions shall be controlled in accordance with the provisions of paragraph (a)(1) or (2) of this section.

§ 63.1405 Continuous process vent provisions.

(a) *Emission standards.* For each continuous process vent located at a new affected source with a Total Resource Effectiveness (TRE) index value, as determined following the procedures specified in § 63.1412(j), less than or equal to 1.2, the owner or operator shall comply with either paragraph (a)(1) or (2) of this section. As an alternative to complying with paragraph (a) of this section, an owner or operator may comply with paragraph (b) of this section.

(1) Vent all emissions of organic HAP to a flare.

(2) Reduce emissions of total organic HAP by 85 weight-percent or to a concentration of 20 ppmv when using a combustion control device or to a concentration of 50 ppmv when using a non-combustion control device, whichever is less stringent. Control shall be achieved by venting emissions through a closed vent system to any combination of control devices meeting the requirements of 40 CFR part 63, subpart SS (national emission standards for closed vent systems, control devices, recovery devices). When complying

with the requirements of 40 CFR part 63, subpart SS, the following apply for purposes of this subpart:

(i) Design evaluations are allowed for control devices that control emission points with total emissions less than 10 tons of organic HAP per year before control (*i.e.*, small control devices).

(ii) When 40 CFR part 63, subpart SS refers to specific test methods for the measurement of organic HAP concentration, the test methods presented in § 63.1414(a) shall be used.

(iii) The option to measure TOC instead of organic HAP, as a basis for demonstrating compliance, is not allowed.

(iv) Excused excursions are not allowed.

(v) The provisions in § 63.1403(b), rather than the provisions in § 63.982(f), are to be followed for combined vent streams.

(vi) When a scrubber is used as a control device, the owner or operator shall follow the guidance provided in this subpart for design evaluations or performance tests, as appropriate, and for monitoring, recordkeeping, and reporting.

(vii) When there are conflicts between the due dates for reports presented in 40 CFR part 63, subpart SS and this subpart, reports shall be submitted according to the due dates presented in this subpart.

(viii) When there are conflicts between the recordkeeping and reporting requirements presented in 40 CFR part 63, subpart SS and this subpart, the owner or operator shall either follow both sets of requirements (*i.e.*, follow the requirements in 40 CFR part 63, subpart SS for emission points covered by 40 CFR part 63, subpart SS and follow the requirements of this subpart for emission points covered by this subpart) or shall follow the set of requirements they prefer. If an owner or operator chooses to follow just one set of requirements, the owner or operator shall identify which set of requirements are being followed and which set of requirements are being disregarded in the appropriate report.

(b) *Alternative standard.* Vent all organic HAP emissions from a continuous process vent meeting the TRE value specified in paragraph (a) of this section to a combustion control device achieving an outlet organic HAP concentration of 20 ppmv or less or to a non-combustion control device achieving an outlet organic HAP concentration of 50 ppmv or less. Any continuous process vents that are not vented to a control device meeting these conditions shall be controlled in accordance with the provisions of paragraphs (a)(1) or (2) of this section.

§ 63.1406 Reactor batch process vent provisions.

(a) *Emission standards.* Owners or operators of reactor batch process vents located at new or existing affected sources shall comply with paragraph (a)(1) or (2) of this section, as appropriate. As an alternative to complying with paragraph (a) of this section, an owner or operator may comply with paragraph (b) of this section.

(1) The owner or operator of a reactor batch process vent located at a new affected source shall control organic HAP emissions by complying with either paragraph (a)(1)(i), (ii), or (iii) of this section.

(i) Vent all emissions of organic HAP to a flare.

(ii) Reduce organic HAP emissions for the batch cycle by 95 weight percent using a control device or control technology.

(iii) Reduce organic HAP emissions from the collection of all reactor batch process vents within the affected source, as a whole, to 0.0045 kilogram of organic HAP per megagram of product or less for solvent-based resin production, or to 0.0004 kilogram of organic HAP per megagram of product or less for non-solvent-based resin production.

(2) The owner or operator of a reactor batch process vent located at an existing affected source shall control organic HAP emissions by complying with either paragraph (a)(2)(i), (ii), or (iii) of this section.

(i) Vent all emissions of organic HAP to a flare.

(ii) Reduce organic HAP emissions for the batch cycle by 83 weight percent using a control device or control technology.

(iii) Reduce organic HAP emissions from the collection of all reactor batch process vents within the affected source, as a whole, to 0.0567 kilogram of organic HAP per megagram of product or less for solvent-based resin production, or to 0.0057 kilogram of organic HAP per megagram of product or less for non-solvent-based resin production.

(b) *Alternative standard.* Vent all organic HAP emissions from a reactor batch process vent to a combustion control device achieving an outlet organic HAP concentration of 20 ppmv or less or to a non-combustion control device achieving an outlet organic HAP concentration of 50 ppmv or less. Any reactor batch process vents that are not vented to a control device meeting these conditions shall be controlled in accordance with the provisions of paragraph (a)(1)(ii), or paragraph (a)(2)(ii) of this section.

(c) *Use of boiler or process heater.* If a boiler or process heater is used to comply with the requirements of paragraph (a)(1)(i) or (ii), or paragraph (a)(2)(i) or (ii) of this section, the reactor batch process vent shall be introduced into the flame zone of such a device.

§ 63.1407 Non-reactor batch process vent provisions.

(a) *Emission standards.* (1) Owners or operators of non-reactor batch process vents located at new or existing affected sources with 0.25 tons per year (0.23 megagrams per year) of uncontrolled organic HAP emissions or greater from the collection of non-reactor batch process vents within the affected source shall comply with the requirements in paragraph (a)(2) or (3) of this section, as appropriate. As an alternative to complying with paragraph (a)(2) or (3) of this section, an owner or operator may comply with paragraph (b) of this section. Owners or operators shall determine uncontrolled organic HAP emissions from the collection of non-reactor batch process vents within the affected source as specified in paragraph (d) of this section. If the owner or operator finds that uncontrolled organic HAP emissions from the collection of non-reactor batch process vents within the affected source are less than 0.25 tons per year (0.23 megagrams per year), non-reactor batch process vents are not subject to the control requirements of this section. Further, the owner or operator shall, when requested by the Administrator, demonstrate that organic HAP emissions for the collection of non-reactor batch process vents within the affected source are less than 0.25 tons per year (0.23 megagrams per year).

(2) The owner or operator of a non-reactor batch process vent located at a new affected source shall:

(i) Vent all emissions of organic HAP to a flare; or

(ii) For the collection of non-reactor batch process vents within the affected source, reduce organic HAP emissions for the batch cycle by 76 weight percent using a control device or control technology.

(3) The owner or operator of a non-reactor batch process vent located at an existing affected source shall:

(i) Vent all emissions of organic HAP to a flare; or

(ii) For the collection of non-reactor batch process vents within the affected source, reduce organic HAP emissions for the batch cycle by 62 weight percent

using a control device or control technology.

(b) *Alternative standard.* Comply with either paragraph (b)(1) or (2) of this section.

(1) *Control device outlet concentration.* Vent all organic HAP emissions from a non-reactor batch process vent to a combustion control device achieving an outlet organic HAP concentration of 20 ppmv or less or to a non-combustion control device achieving an outlet organic HAP concentration or 50 ppmv or less. Any reactor batch process vents that are not vented to a control device meeting these conditions shall be controlled in accordance with the provisions of paragraph (a)(2) or (3) of this section.

(2) *Mass emission limit.* Include the emissions from all non-reactor batch process vents in the compliance demonstration required for reactor batch process vents complying with the mass emission limits specified in § 63.1406(a)(1)(iii) and (a)(2)(iii), as appropriate. This compliance option may only be used when the owner or operator has elected to comply with the mass emission limit for reactor batch process vents.

(c) *Use of boiler or process heater.* If a boiler or process heater is used to comply with paragraph (a)(2)(ii) or (a)(3)(ii) of this section, the reactor batch process vent shall be introduced into the flame zone of such a device.

(d) *Determining uncontrolled organic HAP emissions.* Owners or operators shall determine uncontrolled organic HAP emissions from the collection of non-reactor batch process vents within the affected source based on engineering assessment as described in § 63.1414(d)(6).

§ 63.1408 Aggregate batch vent stream provisions.

(a) *Emission standards.* Owners or operators of aggregate batch vent streams at a new or existing affected source shall comply with either paragraph (a)(1) or (2) of this section, as appropriate. As an alternative to complying with paragraph (a)(1) or (2) of this section, an owner or operator may comply with paragraph (b) of this section.

(1) The owner or operator of an aggregate batch vent stream located at a new affected source shall:

(i) Vent all emissions of organic HAP to a flare; or

(ii) Reduce organic HAP emissions by 95 weight percent or to a concentration of 20 ppmv when using a combustion control device or to a concentration of 50 ppmv when using a non-combustion control device, whichever is less stringent, on a continuous basis.

(2) The owner or operator of an aggregate batch vent stream located at an existing affected source shall:

(i) Vent all emissions of organic HAP to a flare; or

(ii) Reduce organic HAP emissions by 83 weight percent or to a concentration of 20 ppmv when using a combustion control device or to a concentration of 50 ppmv when using a non-combustion control device, whichever is less stringent, on a continuous basis.

(b) *Alternative standard.* Comply with either paragraph (b)(1) or (2) of this section.

(1) *Control device outlet concentration.* Vent all organic HAP emissions from an aggregate batch vent stream to a combustion control device achieving an outlet organic HAP concentration of 20 ppmv or less or to a non-combustion control device achieving an outlet organic HAP concentration of 50 ppmv or less. Any aggregate batch vent streams that are not vented to a control device meeting these conditions shall be controlled in accordance with the provisions of paragraphs (a)(1) or (a)(2) of this section.

(2) *Mass emission limit.* Include the emissions from all aggregate batch vent streams in the compliance demonstration required for reactor batch process vents complying with the mass emission limits specified in § 63.1406(a)(1)(iii) and (a)(2)(iii), as appropriate. This compliance option may only be used when the owner or operator has elected to comply with the mass emission limit for reactor batch process vents.

§ 63.1409 Heat exchange system provisions.

(a) Unless one or more of the conditions specified in paragraphs (a)(1) through (6) of this section are met, owners and operators of sources subject to this subpart shall monitor each heat exchange system used to cool process equipment in an affected source, according to the provisions in either paragraph (b) or (c) of this section. Whenever a leak is detected, the owner or operator shall comply with the requirements in paragraph (d) of this section.

(1) The heat exchange system is operated with the minimum pressure on the cooling water side at least 35 kilopascals greater than the maximum pressure on the process side.

(2) There is an intervening cooling fluid, containing less than 5 percent by weight of total HAP listed in column A of Table 2 of this subpart, between the process and the cooling water. This intervening fluid serves to isolate the cooling water from the process fluid, and the intervening fluid is not sent through a cooling tower or discharged. For purposes of this section, discharge does not include emptying for maintenance purposes.

(3) The once-through heat exchange system is subject to a National Pollution Discharge Elimination System (NPDES) permit with an allowable discharge limit of 1 part per million or less above influent concentration or 10 percent or less above influent concentration, whichever is greater.

(4) The once-through heat exchange system is subject to an NPDES permit that:

(i) Requires monitoring of a parameter(s) or condition(s) to detect a leak of process fluids into cooling water;

(ii) Specifies or includes the normal range of the parameter or condition;

(iii) Requires monitoring for the parameters selected as leak indicators no less frequently than monthly for the first 6 months and quarterly thereafter; and

(iv) Requires the owner or operator to report and correct leaks to the cooling water when the parameter or condition exceeds the normal range.

(5) The recirculating heat exchange system is used to cool process fluids that contain less than 5 percent by weight of total HAP listed in column A of Table 2 of this subpart.

(6) The once-through heat exchange system is used to cool process fluids that contain less than 5 percent by weight of total HAP listed in column B of Table 2 of this subpart.

(b) The owner or operator who elects to comply with the requirements of paragraph (a) of this section by monitoring the cooling water for the presence of one or more organic HAP or other representative substances whose presence in cooling water indicate a leak shall comply with the requirements specified in paragraphs (b)(1) through (6) of this section. The cooling water shall be monitored for total HAP, total volatile organic compounds, total organic carbon, one or more speciated HAP compounds, or other representative substances that would indicate the presence of a leak in the heat exchange system.

(1) The cooling water shall be monitored monthly for the first 6 months and quarterly thereafter to detect leaks.

(2)(i) For recirculating heat exchange systems (cooling tower systems), the monitoring of speciated HAP or total HAP refers to the HAP listed in column A of Table 2 of this subpart.

(ii) For once-through heat exchange systems, the monitoring of speciated HAP or total HAP refers to the HAP listed in column B of Table 2 of this subpart.

(3) The concentration of the monitored substance(s) in the cooling water shall be determined using any EPA-approved method listed in part 136 of this chapter, as long as the method is sensitive to concentrations as low as 10 parts per million and the same method is used for both entrance and exit samples. Alternative methods may be used upon approval by the Administrator.

(4) The samples shall be collected either at the entrance and exit of each heat exchange system or at locations where the cooling water enters and exits each heat exchanger or any combination of heat exchangers.

(i) For samples taken at the entrance and exit of recirculating heat exchange systems, the entrance is the point at which the cooling water leaves the cooling tower prior to being returned to the process equipment, and the exit is the point at which the cooling water is introduced to the cooling tower after being used to cool the process fluid.

(ii) For samples taken at the entrance and exit of once-through heat exchange systems, the entrance is the point at which the cooling water enters, and the exit is the point at which the cooling water exits the plant site or chemical manufacturing process units.

(iii) For samples taken at the entrance and exit of each heat exchanger or any combination of heat exchangers, the entrance is the point at which the cooling water enters the individual heat exchanger or group of heat exchangers, and the exit is the point at which the cooling water exits the heat exchanger or group of heat exchangers.

(5) A minimum of three sets of samples shall be taken at each entrance and exit as defined in paragraph (b)(4) of this section. The average entrance and exit concentrations shall then be calculated. The concentration shall be corrected for the addition of any makeup water or for any evaporative losses, as applicable.

(6) A leak is detected if the exit mean concentration is found to be greater than the entrance mean concentration using a one-sided statistical procedure at the 0.05 level of significance, and the amount by which it is greater is at least 1 part per million or 10 percent of the entrance mean, whichever is greater.

(c) The owner or operator who elects to comply with the requirement of paragraph (a) of this section by monitoring using a surrogate indicator of heat exchange system leaks shall comply with the requirements specified in paragraphs (c)(1) through (3) of this section. Surrogate indicators that could be used to develop an acceptable monitoring program are ion specific electrode monitoring, pH, conductivity or other representative indicators.

(1) The owner or operator shall prepare and implement a monitoring plan that documents the procedures that will be used to detect leaks of process fluids into cooling water. The plan shall require monitoring of one or more surrogate indicators or monitoring of one or more process parameters or other conditions that indicate a leak. Monitoring that is already being conducted for other purposes may be used to satisfy the requirements of this section. The plan shall include the information specified in paragraphs (c)(1)(i) and (ii) of this section.

(i) A description of the parameter or condition to be monitored and an explanation of how the selected parameter or condition will reliably indicate the presence of a leak.

(ii) The parameter level(s) or conditions(s) that constitute a leak. This shall be documented by data or calculations showing that the selected levels or conditions will reliably identify leaks. The monitoring must be sufficiently sensitive to determine the range of parameter levels or conditions when the system is not leaking. When the selected parameter level or condition is outside that range, a leak is indicated.

(iii) The monitoring frequency which shall be no less frequent than monthly for the first 6 months and quarterly thereafter to detect leaks.

(iv) The records that will be maintained to document compliance with the requirements of this section.

(2) If a substantial leak is identified by methods other than those described in the monitoring plan and the method(s) specified in the plan could not detect the leak, the owner or operator shall revise the plan and document the basis for the changes. The owner or operator shall complete the revisions to the plan no later than 180 days after discovery of the leak.

(3) The owner or operator shall maintain, at all times, the monitoring plan that is currently in use. The current plan shall be maintained on-site, or shall be accessible from a central location by computer or other means that provides access within 2 hours after a request. If the monitoring plan is superseded, the owner or operator shall retain the most recent superseded plan at least until 5 years from the date of its creation. The superseded plan shall be retained on-site (or accessible from a central location by computer or other means that provides access within 2 hours after a request) for at least 6 months after its creation.

(d) If a leak is detected according to the criteria of paragraph (b) or (c) of this section, the owner or operator shall comply with the requirements in paragraphs (d)(1) and (2) of this section, except as provided in paragraph (e) of this section.

(1) The leak shall be repaired as soon as practical but not later than 45 calendar days after the owner or operator receives results of monitoring tests indicating a leak. The leak shall be repaired unless the owner or operator demonstrates that the results are due to a condition other than a leak.

(2) Once the leak has been repaired, the owner or operator shall confirm that the heat exchange system has been repaired within 7 calendar days of the repair or startup, whichever is later.

(e) Delay of repair of heat exchange systems for which leaks have been detected is allowed if the equipment is isolated from the process. Delay of repair is also allowed if repair is technically infeasible without a shutdown and any one of the conditions in paragraph (e)(1) or (2) of this section are met. All time periods in paragraphs (e)(1) and (2) of this section shall be determined from the date when the owner or operator determines that delay of repair is necessary.

(1) If a shutdown is expected within the next 2 months, a special shutdown before that planned shutdown is not required.

(2) If a shutdown is not expected within the next 2 months, the owner or operator may delay repair as provided in paragraph (e)(2)(i) or (ii) of this section. Documentation of a decision to delay repair shall state the reasons repair was delayed and shall specify a schedule for completing the repair as soon as practical.

(i) If a shutdown for repair would cause greater emissions than the potential emissions from delaying repair, the owner or operator may delay repair until the next shutdown of the process equipment associated with the leaking heat exchanger. The owner or operator shall document the basis for the determination that a shutdown for repair would cause greater emissions than the emissions likely to result from delaying repair as specified in paragraphs (e)(2)(i)(A) and (B) of this section.

(A) The owner or operator shall calculate the potential emissions from the leaking heat exchanger by multiplying the concentration of total HAP listed in column A of Table 2 of

this subpart in the cooling water from the leaking heat exchanger by the flowrate of the cooling water from the leaking heat exchanger by the expected duration of the delay. The owner or operator may calculate potential emissions using total organic carbon concentration instead of total HAP listed in column A of Table 2 of this subpart.

(B) The owner or operator shall determine emissions from purging and depressurizing the equipment that will result from the unscheduled shutdown for the repair.

(ii) If repair is delayed for reasons other than those specified in paragraph (e)(2)(i) of this section, the owner or operator may delay repair up to a maximum of 120 calendar days. The owner shall demonstrate that the necessary parts or personnel were not available.

§ 63.1410 Equipment leak provisions.

The owner or operator of each affected source shall comply with the requirements of 40 CFR part 63, subpart UU (national emission standards for equipment leaks (control level 2)) for all equipment, as defined under § 63.1402, that contains or contacts 5 weight-percent HAP or greater and operates 300 hours per year or more. The weight-percent HAP is determined for equipment using the organic HAP concentration measurement methods specified in § 63.1414(a). When complying with the requirements of 40 CFR part 63, subpart SS, as referred to by 40 CFR part 63, subpart UU, the following apply for purposes of this subpart:

(a) Design evaluations are allowed for control devices that control emission points with total emissions less than 10 tons of organic HAP per year before control (*i.e.*, small control devices).

(b) When 40 CFR part 63, subpart SS refers to specific test methods for the measurement of organic HAP concentration, the test methods presented in § 63.1414(a) shall be used.

(c) The option to measure TOC instead of organic HAP, as a basis for demonstrating compliance, is not allowed.

(d) Excused excursions are not allowed.

(e) The provisions in § 63.1403(b), rather than the provisions in § 63.982(f), are to be followed for combined vent streams.

(f) When a scrubber is used as a control device, the owner or operator shall follow the guidance provided in this subpart for design evaluations or performance tests, as appropriate, and for monitoring, recordkeeping, and reporting.

(g) When there are conflicts between the due dates for reports presented in 40 CFR part 63, subpart SS and this subpart, reports shall be submitted according to the due dates presented in this subpart.

(h) When there are conflicts between the recordkeeping and reporting requirements presented in 40 CFR part 63, subpart SS and this subpart, the owner or operator shall either follow both sets of requirements (*i.e.*, follow the requirements in 40 CFR part 63, subpart SS for emission points covered by 40 CFR part 63, subpart SS and follow the requirements of this subpart for emission points covered by this subpart) or shall follow the set of requirements they prefer. If an owner or operator chooses to follow just one set of requirements, the owner or operator shall identify which set of requirements are being followed and which set of requirements are being disregarded in the appropriate report.

§ 63.1411 [Reserved]

§ 63.1412 Continuous process vent applicability assessment procedures and methods.

(a) *General.* The provisions of this section provide procedures and methods for determining the applicability of the control requirements specified in § 63.1405 to continuous process vents.

(b) *Sampling sites.* Sampling sites shall be located as follows:

(1) *Sampling site location.* The sampling site for determining volumetric flow rate, regulated organic HAP concentration, total organic HAP, net heating value, and TRE index value, shall be after the final recovery device (if any recovery devices are present) but prior to the inlet of any control device that is present and prior to release to the atmosphere.

(2) *Sampling site selection method.* Method 1 or 1A of 40 CFR part 60, appendix A, as appropriate, shall be used for selection of the sampling site. No traverse site selection method is needed for process vents smaller than 0.33 foot (0.10 meter) in nominal inside diameter.

(c) *Applicability assessment requirement.* The organic HAP concentrations, volumetric flow rates, heating values, organic HAP emission rates, TRE index values, and engineering assessment control applicability assessment requirements are to be determined during maximum representative operating conditions for the process, except as provided in paragraph (d) of this section, or unless the Administrator specifies or approves alternate operating conditions. Operations during periods of startup, shutdown, and malfunction shall not constitute representative conditions for the purpose of an applicability test.

(d) *Exceptions.* The owner or operator is not required to conduct a test that will cause any of the following situations:

(1) Causing damage to equipment;

(2) Necessitating that the owner or operator make a product that does not meet an existing specification for sale to a customer; or

(3) Necessitating that the owner or operator make a product in excess of demand.

(e) *Organic HAP concentration.* The organic HAP concentrations, used for TRE index value calculations in paragraph (j) of this section, shall be determined using the procedures specified in either § 63.1414(a) or by using the engineering assessment procedures in paragraph (k) of this section.

(f) *Volumetric flow rate.* The volumetric flow rate shall be determined using the procedures specified in § 63.1414(a), or by using the engineering assessment procedures in paragraph (k) of this section.

(g) *Heating value.* The net heating value shall be determined as specified in paragraphs (g)(1) and (2) of this section, or by using the engineering assessment procedures in paragraph (k) of this section.

(1) The net heating value of the continuous process vent shall be calculated using Equation 1:

$$H_T = K_1\left(\sum_{j=1}^{n} D_j H_j\right) \quad \text{[Eq. 1]}$$

Where:

H_T=Net heating value of the sample, megaJoules per standard cubic meter, where the net enthalpy per mole of process vent is based on combustion at 25 °C and 760 millimeters of mercury, but the standard temperature for determining the volume corresponding to 1 mole is 20 °C, as in the definition of Q_S (process vent volumetric flow rate).

K_1 = Constant, 1.740×10^{-7} (parts per million)$^{-1}$ (gram-mole per standard cubic meter) (megaJoules per kilocalorie), where standard temperature for (gram-mole per standard cubic meter) is 20 °C.

D_j=Organic HAP concentration on a wet basis of compound j in parts per million, as measured by procedures indicated in paragraph (e) of this section. For process vents that pass through a final stream jet and are not condensed, the moisture is assumed to be 2.3 percent by volume.

H_j=Net heat of combustion of compound j, kilocalorie per gram-mole, based on combustion at 25 °C and 760 millimeters of mercury.

(2) The molar composition of the process vent (D_j) shall be determined using the methods specified in paragraphs (g)(2)(i) through (iii) of this section:

(i) The methods specified in § 63.1414(a) to measure the concentration of each organic compound.

(ii) American Society for Testing and Materials D1946–90 to measure the concentration of carbon monoxide and hydrogen.

(iii) Method 4 of 40 CFR part 60, appendix A to measure the moisture content of the stack gas.

(h) *Organic HAP emission rate.* The emission rate of organic HAP in the continuous process vent, as required by the TRE index value equation specified in paragraph (j) of this section, shall be calculated using Equation 2:

$$E = K_2\left(\sum_{j=1}^{n} C_j M_j\right) Q_S \qquad \text{[Eq. 2]}$$

Where:

E=Emission rate of organic HAP in the sample, kilograms per hour.

K_2=Constant, 2.494×10^{-6} (parts per million)$^{-1}$ (gram-mole per standard cubic meter) (kilogram/gram) (minutes/hour), where standard temperature for (gram-mole per standard cubic meter) is 20 °C.

n=Number of components in the sample.

C_j=Organic HAP concentration on a dry basis of organic compound j in parts per million as determined by the methods specified in paragraph (e) of this section.

M_j=Molecular weight of organic compound j, gram/gram-mole.

Q_S=Continuous process vent flow rate, dry standard cubic meter per minute, at a temperature of 20 °C.

(i) [Reserved]

(j) *TRE index value.* The owner or operator shall calculate the TRE index value of the continuous process vent using the equations and procedures in this paragraph, as applicable, and shall maintain records specified in § 63.1416(f).

(1) *TRE index value equation.* The equation for calculating the TRE index value is Equation 3:

$$TRE = 1/E_{HAP} * \left[A + B(Q_S) + C(H_T)\right] \qquad \text{[Eq. 3]}$$

Where:

TRE=TRE index value.

A, B, C=Coefficients presented in table 7 of this subpart.

E_{HAP}=Emission rate of total organic HAP, kilograms per hour, as calculated according to paragraph (h) or (k) of this section.

Q_S=Continuous process vent volumetric flow rate, standard cubic meters per minute, at a standard temperature of 20 °C, as calculated according to paragraph (f) or (k) of this section.

H_T=Continuous process vent net heating value, megajoules per standard cubic meter, as calculated according to paragraph (g) or (k) of this section.

(2) *TRE index calculation.* The owner or operator of a continuous process vent shall calculate the TRE index value by using the equation and appropriate coefficients in Table 6 of this subpart. The owner or operator shall calculate the TRE index value for each control device scenario (*i.e.*, flare, thermal incinerator with 0 percent recovery, thermal incinerator with 70 percent recovery). The lowest TRE index value is to be compared to the applicability criteria specified in § 63.1405(a).

(k) *Engineering assessment.* For purposes of TRE index value determinations, engineering assessments may be used to determine continuous process vent flow rate, net heating value, and total organic HAP emission rate for the representative operating condition expected to yield the lowest TRE index value. Engineering assessments shall meet the requirements of paragraphs (k)(1) through (4) of this section.

(1) If the TRE index value calculated using engineering assessment is greater than 4.0, the owner or operator is not required to perform the measurements specified in paragraphs (e) through (h) of this section.

(2) If the TRE index value calculated using engineering assessment is less than or equal to 4.0, the owner or operator is required either to perform the measurements specified in paragraphs (e) through (h) of this section for control applicability assessment or comply with the control requirements specified in § 63.1405.

(3) Engineering assessment includes, but is not limited to, the following examples:

(i) Previous test results, provided the tests are representative of current operating practices.

(ii) Bench-scale or pilot-scale test data representative of the process under representative operating conditions.

(iii) Maximum volumetric flow rate, organic HAP emission rate, organic HAP concentration, or net heating value limit specified or implied within a permit limit applicable to the continuous process vent.

(iv) Design analysis based on accepted chemical engineering principles, measurable process parameters, or physical or chemical laws or properties. Examples of analytical methods include, but are not limited to, the following:

(A) Use of material balances based on process stoichiometry to estimate maximum organic HAP concentrations;

(B) Estimation of maximum volumetric flow rate based on physical equipment design such as pump or blower capacities;

(C) Estimation of organic HAP concentrations based on saturation conditions; and

(D) Estimation of maximum expected net heating value based on the stream concentration of each organic compound.

§ 63.1413 Compliance demonstration procedures.

(a) *General.* For each emission point, the owner or operator shall meet three stages of compliance, with exceptions specified in this subpart. First, the owner or operator shall conduct a performance test or design evaluation to demonstrate the performance of the control device or control technology being used. Second, the owner or operator shall meet the requirements for demonstrating initial compliance (*e.g.*, a demonstration that the required percent reduction is achieved). Third, the owner or operator shall meet the requirements for demonstrating continuous compliance through some form of monitoring (*e.g.*, continuous monitoring of operating parameters).

(1) *Large control devices and small control devices.* A large control device is a control device that controls emission points with total emissions of 10 tons of organic HAP per year or more before control. A small control device is a control device that controls emission points with total emissions less than 10 tons of organic HAP per year before control.

(i) *Large control devices.* Owners or operators are required to conduct a performance test for a large control device. The establishment of parameter monitoring levels shall be based on data obtained during the required performance test.

(ii) *Small control devices.* Owners or operators are required to conduct a design evaluation for a small control device. An owner or operator may choose to conduct a performance test for a small control device and such a performance test shall follow the procedures specified in this section, as appropriate. Whenever a small control device becomes a large control device, the owner or operator shall conduct a performance test following the procedures specified in this section, as appropriate. Notification that such a

performance test is required, the site-specific test plan, and the results of the performance test shall be provided to the Administrator as specified in § 63.1417. Except as provided in § 63.1415(a)(2), the parameter monitoring levels for small control devices shall be set based on the design evaluation required by paragraph (a)(3) of this section. Further, when setting the parameter monitoring level(s) based on the design evaluation, the owner or operator shall submit the information specified in § 63.1417(d)(7) for review and approval as part of the Precompliance Report.

(2) *Performance tests.* Performance testing shall be conducted in accordance with the General Provisions at § 63.7(a)(1), (a)(3), (d), (e)(1), (e)(2), (e)(4), (g), and (h), with the exceptions specified in paragraph (a)(1) of this section. Data shall be reduced in accordance with the EPA approved methods specified in this subpart or, if other test methods are used, the data and methods shall be validated according to the protocol in Method 301 of appendix A of this part.

(i) *Additional control devices not requiring performance tests.* An owner or operator is not required to conduct a performance test when using one of the following control devices:

(A) A boiler or process heater with a design heat input capacity of 44 megawatts or greater.

(B) A boiler or process heater into which the vent stream is introduced with the primary fuel or is used as the primary fuel.

(C) A boiler or process heater burning hazardous waste for which the owner or operator:

(*1*) Has been issued a final permit under 40 CFR part 270 and complies with the requirements of 40 CFR part 266, subpart H; or

(*2*) Has certified compliance with the interim status requirements of 40 CFR part 266, subpart H.

(D) A hazardous waste incinerator for which the owner or operator has been issued a final permit under 40 CFR part 270 and complies with the requirements of 40 CFR part 264, subpart O, or has certified compliance with the interim status requirements of 40 CFR part 265, subpart O.

(E) A control device for which a performance test was already conducted for determining compliance with another regulation promulgated by the EPA, provided the test was conducted using the same Methods specified in this section, and either no deliberate process changes have been made since the test, or the owner or operator can demonstrate that the results of the performance test, with or without adjustments, reliably demonstrate compliance despite process changes. Parameter monitoring levels established based on such a performance test may be used for purposes of demonstrating continuous compliance with this subpart.

(ii) *Exceptions to performance test requirements in the General Provisions.* (A) Performance tests shall be conducted at maximum representative operating conditions achievable during either the 6-month period ending 2 months before the Notification of Compliance Status required by § 63.1417(e) is due, or during the 6-month period surrounding the date of the performance test (*i.e.*, the period beginning 3 months prior to the performance test and ending 3 months after the performance test). In achieving maximum representative operating conditions, an owner or operator is not required to cause damage to equipment, make a product that does not meet an existing specification for sale to a customer, or make a product in excess of demand.

(B) When § 63.7(g) references the Notification of Compliance Status requirements in § 63.9(h), the requirements in § 63.1417(e) shall apply for purposes of this subpart.

(C) Performance tests shall be performed no later than 150 days after the compliance dates specified in this subpart (*i.e.*, in time for the results to be included in the Notification of Compliance Status), rather than according to the time periods in § 63.7(a)(2).

(3) *Design evaluations.* To demonstrate the organic HAP removal efficiency for a control device or control technology, a design evaluation shall address the composition and organic HAP concentration of the vent stream(s) entering the control device or control technology, the operating parameters of the control device or control technology, and other conditions or parameters that reflect the performance of the control device or control technology. A design evaluation also shall address other vent stream characteristics and control device operating parameters as specified in any one of paragraphs (a)(3)(i) through (vi) of this section, depending on the type of control device that is used. If the vent stream(s) is not the only inlet to the control device, the efficiency demonstration also shall consider all other vapors, gases, and liquids, other than fuels, received by the control device.

(i) For a scrubber, the design evaluation shall consider the vent stream composition, constituent concentrations, liquid-to-vapor ratio, scrubbing liquid flow rate and concentration, temperature, and the reaction kinetics of the constituents with the scrubbing liquid. The design evaluation shall establish the design exhaust vent stream organic compound concentration level and include the additional information in paragraphs (a)(3)(i)(A) and (B) of this section for trays and a packed column scrubber:

(A) Type and total number of theoretical and actual trays; and

(B) Type and total surface area of packing for entire column, and for individual packed sections if column contains more than one packed section.

(ii) For a condenser, the design evaluation shall consider the vent stream flow rate, relative humidity, and temperature and shall establish the design outlet organic HAP compound concentration level, design average temperature of the condenser exhaust vent stream, and the design average temperatures of the coolant fluid at the condenser inlet and outlet. The temperature of the gas stream exiting the condenser shall be measured and used to establish the outlet organic HAP concentration.

(iii) For a carbon adsorption system that regenerates the carbon bed directly onsite in the control device, such as a fixed-bed adsorber, the design evaluation shall consider the vent stream flow rate, relative humidity, and temperature and shall establish the design exhaust vent stream organic compound concentration level, adsorption cycle time, number and capacity of carbon beds, type and working capacity of activated carbon used for carbon beds, design total regeneration stream mass or volumetric flow over the period of each complete carbon bed regeneration cycle, design carbon bed temperature after regeneration, design carbon bed regeneration time, and design service life of carbon. For vacuum desorption, the pressure drop shall be included.

(iv) For a carbon adsorption system that does not regenerate the carbon bed directly onsite in the control device, such as a carbon canister, the design evaluation shall consider the vent stream mass or volumetric flow rate, relative humidity, and temperature and shall establish the design exhaust vent stream organic compound concentration level, capacity of carbon bed, type and working capacity of activated carbon used for carbon bed, and design carbon replacement interval based on the total carbon working capacity of the control device and source operating schedule.

(v) For an enclosed combustion device with a minimum residence time

of 0.5 seconds and a minimum temperature of 760 C, the design evaluation shall document that these conditions exist.

(vi) For a combustion control device that does not satisfy the criteria in paragraph (a)(3)(v) of this section, the design evaluation shall address the following characteristics, depending on the type of control device:

(A) For a thermal vapor incinerator, the design evaluation shall consider the autoignition temperature of the organic HAP, shall consider the vent stream flow rate, and shall establish the design minimum and average temperature in the combustion zone and the combustion zone residence time.

(B) For a catalytic vapor incinerator, the design evaluation shall consider the vent stream flow rate and shall establish the design minimum and average temperatures across the catalyst bed inlet and outlet.

(C) For a boiler or process heater, the design evaluation shall consider the vent stream flow rate, shall establish the design minimum and average flame zone temperatures and combustion zone residence time, and shall describe the method and location where the vent stream is introduced into the flame zone.

(4) *Establishment of parameter monitoring levels.* The owner or operator of a control device that has one or more parameter monitoring level requirements specified under this subpart, or specified under subparts referenced by this subpart, shall establish a maximum or minimum level, as denoted on Table 4 of this subpart, for each measured parameter using the procedures specified in paragraph (a)(4)(i) or (ii) of this section. Except as otherwise provided in this subpart, the owner or operator shall operate control devices such that the daily average, batch cycle daily average, or block average of monitored parameters, established as specified in this paragraph, remains above the minimum level or below the maximum level, as appropriate.

(i) *Establishment of parameter monitoring levels based on performance tests.* (A) *Emission points other than batch process vents.* During initial compliance testing, the appropriate parameter shall be continuously monitored during the required 1-hour test runs. The monitoring level(s) shall then be established as the average of the maximum (or minimum) point values from the three test runs. The average of the maximum values shall be used when establishing a maximum level, and the average of the minimum values shall be used when establishing a minimum level.

(B) *Aggregate batch vent streams.* For aggregate batch vent streams the monitoring level shall be established in accordance with paragraph (a)(4)(i)(A) of this section.

(C) *Batch process vents.* The monitoring level(s) shall be established using the procedures specified in paragraphs (a)(4)(i)(C)(*1*) or (*2*) of this section. For batch process vents complying with the percent reduction standards specified in § 63.1406 or § 63.1407, parameter monitoring levels shall be established by the design evaluation, or during the performance test so that the specified percent reduction from § 63.1406 or § 63.1407, as appropriate, is met.

(*1*) If more than one batch emission episode or more than one portion of a batch emission episode has been selected to be controlled, a single level for the batch cycle shall be calculated as follows:

(*i*) During initial compliance testing, the appropriate parameter shall be monitored continuously and recorded once every 15 minutes at all times when batch emission episodes, or portions thereof, selected to be controlled are vented to the control device. A minimum of three recorded values shall be obtained for each batch emission episode, or portion thereof, regardless of the length of time emissions are occurring.

(*ii*) The average monitored parameter value shall be calculated for each batch emission episode, or portion thereof, in the batch cycle selected to be controlled. The average shall be based on all values measured during the required performance test.

(*iii*) If the level to be established is a maximum operating parameter, the level shall be defined as the minimum of the average parameter values from each batch emission episode, or portion thereof, in the batch cycle selected to be controlled (*i.e.*, identify the batch emission episode, or portion thereof, which requires the lowest parameter value in order to assure compliance; the average parameter value that is necessary to assure compliance for that batch emission episode, or portion thereof, shall be the level for all batch emission episodes, or portions thereof, in the batch cycle that are selected to be controlled).

(*iv*) If the level to be established is a minimum operating parameter, the level shall be defined as the maximum of the average parameter values from each batch emission episode, or portion thereof, in the batch cycle selected to be controlled (*i.e.*, identify the batch emission episode, or portion thereof, which requires the highest parameter value in order to assure compliance; the average parameter value that is necessary to assure compliance for that batch emission episode, or portion thereof, shall be the level for all batch emission episodes, or portions thereof, in the batch cycle that are selected to be controlled).

(*v*) Alternatively, an average monitored parameter value shall be calculated for the entire batch cycle based on all values recorded during each batch emission episode, or portion thereof, selected to be controlled.

(*2*) Instead of establishing a single level for the batch cycle, as described in paragraph (a)(4)(i)(C)(*1*) of this section, an owner or operator may establish separate levels for each batch emission episode, or portion thereof, selected to be controlled. Each level shall be determined as specified in paragraphs (a)(4)(i)(C)(*1*)(*i*) through (*v*) of this section.

(*3*) The batch cycle shall be defined in the Notification of Compliance Status, as specified in § 63.1417(e)(2). Said definition shall include an identification of each batch emission episode. The definition of batch cycle shall also include the information required to determine parameter monitoring compliance for partial batch cycles (*i.e.*, when part of a batch cycle is accomplished during 2 different operating days) for those parameters averaged on a batch cycle daily average basis.

(ii) *Establishment of parameter monitoring levels based on performance tests, engineering assessments, and/or manufacturer's recommendations.* Parameter monitoring levels may be established based on the parameter values measured during the performance test supplemented by engineering assessments and/or manufacturer's recommendations. Performance testing is not required to be conducted over the entire range of expected parameter values. When setting the parameter monitoring level(s) using the procedures specified in this paragraph, the owner or operator shall submit the information specified in § 63.1417(d)(7) for review and approval as part of the Precompliance Report.

(b) *Initial and continuous compliance for storage vessels.* (1) Initial compliance with the percent reduction standard specified in § 63.1404(a)(1) shall be demonstrated following the procedures in 40 CFR part 63, subpart SS.

(2) Initial compliance with the work practice standard specified in § 63.1404(a)(2) shall be demonstrated

following the procedures in 40 CFR part 63, subpart WW.

(3) Continuous compliance with the percent reduction standard specified in § 63.1404(a)(1) shall be demonstrated following the procedures in 40 CFR part 63, subpart SS.

(4) Continuous compliance with the work practice standard specified in § 63.1404(a)(2) shall be demonstrated following the procedures in 40 CFR part 63, subpart WW.

(5) Initial and continuous compliance with the alternative standard specified in § 63.1404(b) shall be demonstrated following the procedures in paragraph (f) of this section.

(c) *Initial and continuous compliance for continuous process vents.* (1) Initial compliance with the percent reduction standard specified in § 63.1405(a)(2) shall be demonstrated following the procedures in 40 CFR part 63, subpart SS.

(2) Initial compliance with § 63.1405(a)(1) (venting of emissions to a flare) shall be demonstrated following the procedures specified in paragraph (g) of this section.

(3) Continuous compliance with the percent reduction standard specified in § 63.1405(a)(2) shall be demonstrated following the procedures in 40 CFR part 63, subpart SS.

(4) Continuous compliance with § 63.1405(a)(1) (venting of emissions to a flare) shall be demonstrated following the continuous monitoring procedures specified in § 63.1415.

(5) Initial and continuous compliance with the alternative standard specified in § 63.1405(b) shall be demonstrated following the procedures in paragraph (f) of this section.

(d) *Initial and continuous compliance for aggregate batch vent streams.* (1) Initial compliance with the percent reduction standard specified in § 63.1408(a)(1)(ii) and (2)(ii) shall be demonstrated following the procedures for continuous process vents specified in paragraph (c)(1) of this section.

(2) Initial compliance with § 63.1408(a)(1)(i) and (2)(i) (venting of emissions to a flare) shall be demonstrated following the procedures specified in paragraph (g) of this section.

(3) Continuous compliance with the percent reduction standard specified in § 63.1408(a)(1)(ii) and (2)(ii) shall be demonstrated following the procedures for continuous process vents specified in paragraph (c)(3) of this section.

(4) Continuous compliance with § 63.1408(a)(1)(i) and (a)(2)(i) (venting of emissions to a flare) shall be demonstrated following the continuous monitoring procedures specified in § 63.1415.

(5) Initial and continuous compliance with the alternative standard specified in § 63.1408(b)(1) shall be demonstrated following the procedures in paragraph (f) of this section.

(6) Initial and continuous compliance with the mass emission limit specified in § 63.1408(b)(2) shall be demonstrated following the procedures in paragraph (e)(2) of this section.

(e) *Initial and continuous compliance for batch process vents.* (1) *Compliance with percent reduction standards.* Owners or operators opting to comply with the percent reduction standards specified in § 63.1406(a)(1)(ii) and (a)(2)(ii) or § 63.1407(a)(2)(ii) and (a)(3)(ii) shall select portions of the batch process vent emissions (*i.e.*, select batch emission episodes or portions of batch emission episodes) to be controlled such that the specified percent reduction is achieved for the batch cycle. Paragraphs (e)(1)(i) and (ii) of this section specify how the performance of a control device or control technology is to be determined. Paragraph (e)(1)(iii) of this section specifies how to demonstrate that the required percent emission reduction is achieved for the batch cycle.

(i) *Design evaluation.* The design evaluation shall comply with the provisions in paragraph (a)(3) of this section. The design evaluation shall include the value(s) and basis for the parameter monitoring level(s) required by § 63.1415. The design evaluation shall determine either of the following:

(A) *Each batch emission episode.* The control device efficiency for each batch emission episode that the owner or operator selects to control.

(B) *One or more representative batch emission episodes.* The control device efficiency for one or more batch emission episodes provided that the owner or operator demonstrates that the control device achieves the same or higher efficiency for all other batch emission episodes that the owner or operator selects to control.

(ii) *Performance test.* An owner or operator shall conduct performance tests following the procedures in paragraph (e)(1)(ii)(A) of this section, the procedures in paragraph (e)(1)(ii)(B) of this section, or a combination of the two procedures. Under paragraph (e)(1)(ii)(A) of this section, a performance test is conducted for each batch emission episode selected for control. Under paragraph (e)(1)(ii)(B) of this section, an owner or operator groups together several batch emission episodes and conducts a single performance test for the batch emission episode that is the most challenging, in terms of achieving emission reductions, for the control device or control technology; thereby demonstrating that the achieved emission reduction for the tested batch emission episode is the minimum control device or control technology performance expected for each batch emission episode in the group. An owner or operator may use the concept provided by paragraph (e)(1)(ii)(B) of this section for several different groups of batch emission episodes.

(A) *Testing each batch emission episode.* A performance test shall be performed for each batch emission episode, or portion thereof, that the owner or operator selects to control. Performance tests shall be conducted using the testing procedures specified in § 63.1414(a) and (b) and the following procedures:

(*1*) Only one test (*i.e.*, only one run) is required for each batch emission episode selected by the owner or operator for control.

(*2*) Except as specified in paragraph (e)(1)(ii)(A)(3) of this section, the performance test shall be conducted over the entire period of emissions selected by the owner or operator for control.

(*3*) An owner or operator may choose to test only those periods of the batch emission episode during which the emission rate for the entire batch emission episode can be determined or during which the organic HAP emissions are greater than the average emission rate of the batch emission episode. The owner or operator choosing either of these options shall develop an emission profile illustrating the emission rate (kilogram per unit time) over the entire batch emission episode, based on either process knowledge or test data, to demonstrate that test periods are representative. Examples of information that could constitute process knowledge include calculations based on material balances and process stoichiometry. Previous test results may be used to develop the emission profile provided the results are still relevant to the current batch process vent conditions. The emission profile shall be included in the site-specific test plan required by § 63.1417(h)(2).

(*4*) When choosing sampling sites using the methods specified in § 63.1414(a)(1), inlet sampling sites shall be located as specified in paragraphs (e)(1)(ii)(A)(*4*)(*i*) and (*ii*) of this section. Outlet sampling sites shall be located at the outlet of the control device prior to release to the atmosphere.

(*i*) The control device inlet sampling site shall be located at the exit from the batch unit operation after any condensers operating as process condensers and before any control device.

(*ii*) If a batch process vent is introduced with the combustion air or as a secondary fuel into a boiler or process heater with a design capacity less than 44 megawatts, selection of the location of the inlet sampling sites shall ensure the measurement of total organic HAP concentrations in all batch process vents and primary and secondary fuels introduced into the boiler or process heater.

(B) *Testing only the most challenging batch emission episode.* Under this paragraph, an owner or operator groups together several batch emission episodes and conducts a single performance test for the batch emission episode that is the most challenging, in terms of achieving emission reductions, for the control device or control technology; thereby demonstrating that the achieved emission reduction for the tested batch emission episode is the minimum control device or control technology performance expected for each batch emission episode in the group. The owner or operator shall use the control device efficiency determined from the performance test for all the other batch emission episodes in that group for purposes of paragraph (e)(2)(iii) of this section. Performance tests shall be conducted using the testing procedures specified in § 63.1414(a) and (b) and the following procedures:

(*1*) The procedures specified in paragraphs (e)(2)(ii)(A)(*2*) through (*4*) of this section.

(*2*) Develop an emission profile illustrating the emission rate (kilogram/unit time) for each period of emissions to be addressed by the performance test. The emission profile shall be based on either process knowledge or test data. Examples of information that could constitute process knowledge include calculations based on material balances and process stoichiometry. Previous test results may be used to develop the emission profile provided the results are still relevant to the current batch process vent conditions. The emission profile shall be included in the site-specific test plan required by § 63.1417(h)(2).

(*3*) Provide rationale for why the control device efficiency for all the other batch emission episodes in the group will be greater than or equal to the control device efficiency achieved during the tested period of the most challenging batch emission episode in the group, as specified in the Notification of Compliance Status Report required by § 63.1417(e).

(iii) *Batch cycle percent reduction.* The percent reduction for the batch cycle for an individual reactor batch process vent and the overall percent reduction for the collection of non-reactor batch process vents within the affected source shall be determined using Equation 1 of this section and the control device efficiencies specified in paragraphs (e)(1)(iii)(A) through (C) of this section. All information used to calculate the batch cycle percent reduction for an individual reactor batch process vent, including a definition of the batch cycle identifying all batch emission episodes, shall be recorded as specified in § 63.1416 (d)(1)(ii). All information used to calculate the overall percent reduction for the collection of non-reactor batch process vents within the affected source, including a list of all batch emission episodes from the collection of non-reactor batch process vents within the affected source, shall be recorded as specified in § 63.1416 (d)(1)(ii). This information shall include identification of those batch emission episodes, or portions thereof, selected for control. This information shall include estimates of uncontrolled organic HAP emissions for those batch emission episodes, or portions thereof, that are not selected for control, determined as specified in paragraph (e)(2)(iii)(D) or (E) of this section.

$$PR = \frac{\sum_{i=1}^{n} E_{unc} + \sum_{i=1}^{n} E_{inlet,con} - \sum_{i=1}^{n} (1-R) E_{inlet,con}}{\sum_{i=1}^{n} E_{unc} + \sum_{i=1}^{n} E_{inlet,con}} (100) \qquad \text{[Eq. 1]}$$

Where:

PR = Percent reduction.

E_{unc} = Mass rate of total organic HAP for uncontrolled batch emission episode i, kg/hr.

$E_{inlet,con}$ = Mass rate of total organic HAP for controlled batch emission episode i at the inlet to the control device, kg/hr.

R = Control efficiency of control device as specified in paragraphs (e)(1)(iii)(A) through (e)(1)(iii)(C) of this section. The value of R may vary between batch emission episodes.

n=Number of uncontrolled batch emission episodes, controlled batch emission episodes, and control devices. The value of n is not necessarily the same for these three items.

(A) When conducting a performance test, the control efficiency of the control device shall be determined following the procedures in § 63.1414(b)(4).

(B) For combustion control devices listed in paragraphs (a)(2)(i)(A) and (B) of this section and for flares, the control efficiency in Equation 1 of this section shall be 98 percent.

(C) If a performance test is not required, the control efficiency shall be based on the design evaluation specified in paragraph (e)(1)(i) of this section.

(D) For batch process vents estimated through engineering assessment, as described in § 63.1414(f)(6), to emit less than 10 tons per year of uncontrolled organic HAP emissions, the owner or operator may use in Equation 1 of this section the emissions determined using engineering assessment or may determine organic HAP emissions using any of the procedures specified in § 63.1414(d).

(E) For batch process vents estimated through engineering assessment, as described in § 63.1414(d)(6), to emit 10 tons per year or greater of uncontrolled organic HAP emissions, organic HAP emissions shall be estimated following the procedures specified in § 63.1414(d).

(F) Owners or operators designating a condenser, sometimes operated as a process condenser, as a control device shall conduct inprocess recycling and follow the recordkeeping requirements specified in § 63.1416(d)(1)(vi).

(iv) *Initial compliance with percent reduction standards.* Initial compliance with the percent reduction standards specified in § 63.1406(a)(1)(ii) and (2)(ii) and § 63.1407(a)(2)(ii) and (3)(ii) is achieved when the owner or operator demonstrates, following the procedures in paragraphs (e)(1)(i) through (iii) of this section, that the required percent reduction is achieved.

(v) *Continuous compliance with percent reduction standards.* Continuous compliance with the percent reduction standards specified in § 63.1406(a)(1)(ii) and (2)(ii) and

§ 63.1407(a)(2)(ii) and (3)(ii) shall be demonstrated following the continuous monitoring procedures specified in § 63.1415.

(2) *Compliance with mass emission limit standards.* Each owner or operator shall determine initial and continuous compliance with the mass emission limits specified in § 63.1406 (a)(1)(iii) and (a)(2)(iii), according to the following procedures, as appropriate:

(i) If production at an affected source is exclusively non-solvent-based amino/phenolic resin or is exclusively solvent-based amino/phenolic resin, or an owner or operator chooses to meet the non-solvent-based emission limit, the owner or operator shall demonstrate initial and continuous compliance as follows:

(A) *Initial compliance.* Initial compliance shall be based on the average of the first 6 monthly average emission rate data points. The 6-month average shall be compared to the mass emission limit specified in § 63.1406 (a)(1)(iii) and (a)(2)(iii), as appropriate.

(B) *Continuous compliance.* For the first year of compliance, continuous compliance shall be based on a cumulative average monthly emission rate calculated each month based on the available monthly emission rate data points (*e.g.*, 7 data points after 7 months of operation, 8 data points after 8 months of operation) beginning the first month after initial compliance is demonstrated. The first continuous compliance cumulative average monthly emission rate shall be calculated using the first 7 monthly average emission rate data points. After the first year of compliance, a 12-month rolling average monthly emission rate shall be calculated each month based on the previous 12 monthly emission rate data points. Continuous compliance shall be determined by comparing the cumulative average monthly emission rate or the 12-month rolling average monthly emission rate to the mass emission limit specified in § 63.1406 (a)(1)(iii) and (a)(2)(iii), as appropriate.

(C) *Procedures to determine the monthly emission rate.* The monthly emission rate, kilograms of organic HAP per megagram of product, shall be determined at the end of each month using Equation 2 of this section:

Where:

ER=Emission rate of organic HAP from reactor batch process vents, kg of HAP/Mg product.

E_i=Emission rate of organic HAP from reactor batch process vent i as determined using the procedures specified in paragraph (e)(2)(i)(C)(1) of this section, kg/month.

RP_m=Amount of resin produced in one month as determined using the procedures specified in paragraph (e)(2)(i)(C)(*4*) of this section, Mg/month.

n=Number of batch process vents.

(*1*) The monthly emission rate of organic HAP, in kilograms per month, from an individual batch process vent (E_i) shall be determined using Equation 3 of this section. Once organic HAP emissions for a batch cycle ($E_{cycle i}$) have been estimated, as specified in either paragraph (e)(2)(i)(C)(*2*) or (*3*) of this section, the owner or operator may use the estimated organic HAP emissions ($E_{cycle i}$) to determine E_i using Equation 3 of this section until the estimated organic HAP emissions ($E_{cycle i}$) are no longer representative due to a process change or other reasons known to the owner or operator. If organic HAP emissions for a batch cycle ($E_{cycle i}$) are determined to no longer be representative, the owner or operator shall redetermine organic HAP emissions for the batch cycle ($E_{cycle i}$) following the procedures in paragraph (e)(2)(i)(C)(*2*) or (*3*) of this section, as appropriate.

$$Ei = \sum_{i=1}^{n} (N_i)(E_{cycle_i}) \qquad \text{[Eq. 3]}$$

Where:

E_i=Monthly emissions from a batch process vent, kg/month.

N_i=Number of type i batch cycles performed monthly, cycles/month.

$E_{cycle i}$=Emissions from the batch process vent associated with a single type i batch cycle, as determined using the procedures specified in either paragraph (e)(2)(i)(C)(*2*) or (*3*) of this section, kg/batch cycle.

n=Number of different types of batch cycles that cause the emission of organic HAP from the batch process vent.

(*2*) For reactor batch process vents estimated through engineering assessment, as described in § 63.1414(d)(6), to emit less than 10 tons per year of uncontrolled organic HAP emissions, the owner or operator may use the emissions determined using engineering assessment in Equation 3 of this section or may determine organic HAP emissions using any of the procedures specified in § 63.1414(d). For reactor batch process vents estimated through engineering assessment, as described in § 63.1414(d)(6), to emit 10 tons per year or greater of uncontrolled organic HAP emissions, uncontrolled organic HAP emissions from the batch emission episodes making up the batch cycle shall be estimated following the procedures specified in § 63.1414(d).

(*3*) For reactor batch process vents vented to a control device or control technology, controlled organic HAP emissions shall be determined as follows:

(*i*) Uncontrolled organic HAP emissions shall be determined following the procedures in paragraph (e)(2)(i)(C)(2) of this section.

(*ii*) Control device or control technology efficiency shall be determined using the procedures in paragraph (e)(1)(i) of this section for small control devices or the procedures in paragraph (e)(1)(ii) of this section for large control devices.

(*iii*) Controlled organic HAP emissions shall be determined by applying the control device or control technology efficiency, determined in paragraph (e)(2)(i)(C)(*3*)(*ii*) of this section, to the uncontrolled organic HAP emissions, determined in paragraph (e)(2)(i)(C)(*3*)(*i*) of this section.

(*4*) The rate of resin produced, RP_M (Mg/month), shall be determined based on production records certified by the owner or operator to represent actual production for the month. A sample of the records selected by the owner or operator for this purpose shall be provided to the Administrator in the Precompliance Report as required by § 63.1417(d).

(ii) If production at an affected source reflects a mix of solvent-based and non-solvent-based resin and the owner or operator does not choose to meet the non-solvent-based emission limit specified in § 63.1406 (a)(1)(iii) or (a)(2)(iii), as applicable, the owner or operator shall demonstrate initial and continuous compliance as follows:

(A) *Procedures for determining a site-specific emission limit.* A site-specific emission limit shall be determined using Equation 4 of this section.

$$SSEL = \frac{(MGs * ELs) + (MGns * ELns)}{MGs + MGns} \qquad \text{[Eq. 4]}$$

Where:

SSEL=Site specific emission limit, kg of organic HAP/Mg of product.

MGs=Megagrams of solvent-based resin product produced, megagrams.

MGns=Megagrams of non-solvent-based resin product produced, megagrams.

ELs=Emission limit for solvent-based resin product, kg organic HAP/Mg solvent-based resin product.

ELns=Emission limit for non-solvent-based resin product, kg organic HAP/Mg non-solvent-based resin product.

(B) *Initial compliance.* For purposes of determining initial compliance, the site-specific emission limit shall be based on production for the first 6 months beginning January 20, 2000 or the first 6 months after initial start-up, whichever is later. Using the site-specific emission limit, initial compliance shall be demonstrated using the procedures in paragraph (e)(2)(i)(A) of this section, as appropriate.

(C) *Continuous compliance.* For purposes of determining continuous compliance for the period of operation starting at the beginning of the 7th month and ending after the 12th month, the site-specific emission limit shall be determined each month based on production for the cumulative period. For purposes of determining continuous compliance after the first year of production, the site-specific emission limit shall be determined each month based on production for a 12-month rolling period. Using the site-specific emission limit, continuous compliance shall be demonstrated using the procedures in paragraph (e)(2)(i)(B) of this section, as appropriate.

(3) *Compliance by venting to a flare.* Initial compliance with the standards specified in § 63.1406(a)(1)(i) and (a)(2)(i) and § 63.1407(a)(2)(i) and (a)(3)(i) shall be demonstrated following the procedures specified in paragraph (g) of this section. Continuous compliance with these standards shall be demonstrated following the continuous monitoring procedures specified in § 63.1415.

(4) *Compliance with alternative standard.* Initial and continuous compliance with the alternative standard specified in §§ 63.1406(b) and 63.1407(b)(1) shall be demonstrated following the procedures in paragraph (f) of this section.

(f) *Compliance with alternative standard.* Initial and continuous compliance with the alternative standards in §§ 63.1404(b), 63.1405(b), 63.1406(b), 63.1407(b)(1), and 63.1408(b)(1) are demonstrated when the daily average outlet organic HAP concentration is 20 ppmv or less when using a combustion control device or 50 ppmv or less when using a non-combustion control device. To demonstrate initial and continuous compliance, the owner or operator shall follow the test method specified in § 63.1414(a)(6) and shall be in compliance with the monitoring provisions in § 63.1415(e) no later than the initial compliance date and on each day thereafter.

(g) *Flare compliance demonstrations.* Notwithstanding any other provision of this subpart, if an owner or operator of an affected source uses a flare to comply with any of the requirements of this subpart, the owner or operator shall comply with paragraphs (g)(1) through (3) of this section. When using a flare to comply, the owner or operator is not required to conduct a performance test to determine percent emission reduction or outlet organic HAP concentration. If a compliance demonstration has been conducted previously for a flare, using the techniques specified in paragraphs (g)(1) through (3) of this section, that compliance demonstration may be used to satisfy the requirements of this paragraph if either no deliberate process changes have been made since the compliance demonstration, or the results of the compliance demonstration reliably demonstrate compliance despite process changes.

(1) Conduct a visible emission test using the techniques specified in § 63.11(b)(4).

(2) Determine the net heating value of the gas being combusted using the techniques specified in § 63.11(b)(6).

(3) Determine the exit velocity using the techniques specified in either § 63.11(b)(7)(i) (and § 63.11(b)(7)(iii), where applicable) or § 63.11(b)(8), as appropriate.

(h) *Deviations.* Paragraphs (h)(1) through (4) of this section describe deviations from the emission limits, the operating limits, the work practice standards, and the emission standard, respectively. Paragraph (h)(5) of this section describes situations that are not deviations. Paragraph (h)(6) of this section describes periods that are excluded from compliance determinations.

(1) *Deviations from the emission limit.* The following are deviations from the emission limit:

(i) Exceedance of the condenser outlet gas temperature limit (*i.e.*, having an average value higher than the established maximum level) monitored according to the provisions of § 63.1415(b)(3);

(ii) Exceedance of the outlet concentration (*i.e.*, having an average value higher than the established maximum level) monitored according to the provisions of § 63.1415(b)(8);

(iii) Exceedance of the mass emission limit (*i.e.*, having an average value higher than the specified limit) monitored according to the provisions of paragraph (e)(2) of this section; and

(iv) Exceedance of the organic HAP outlet concentration limit (*i.e.*, having an average value higher than the specified limit) monitored according to the provisions of § 63.1415(e).

(2) *Deviations from the operating limit.* Exceedance of the parameters monitored according to § 63.1415(b)(1), (b)(2), and (b)(4) through (7) are considered deviations from the operating limit. An exceedance of the monitored parameter has occurred if:

(i) The parameter, averaged over the operating day or block, is below a minimum value established during the initial compliance demonstration; or (ii) The parameter, averaged over the operating day or block, is above the maximum value established during the initial compliance demonstration.

(3) *Deviations from the work practice standard.* If all flames at the pilot light of a flare are absent, there has been a deviation from the work practice standard.

(4) *Deviation from the emission standard.* If an affected source is not operated during periods of start-up, shutdown, or malfunction in accordance with the affected source's Start-up, Shutdown, and Malfunction Plan, there has been a deviation from the emission standard. If monitoring data are insufficient, as described in paragraphs (h)(4)(i) through (iii) of this section, there has been a deviation from the emission standard.

(i) The period of control device or control technology operation is 4 hours or greater in an operating day, and monitoring data are insufficient to constitute a valid hour of data, as defined in paragraph (h)(4)(iii) of this section, for at least 75 percent of the operating hours;

(ii) The period of control device or control technology operation is less than 4 hours in an operating day, and more than one of the hours during the period of operation does not constitute a valid hour of data due to insufficient monitoring data; and

(iii) Monitoring data are insufficient to constitute a valid hour of data, as used in paragraphs (h)(4)(i) and (ii) of this section, if measured values are unavailable for any of the 15-minute periods within the hour. For data compression systems approved under § 63.1417(k)(3), monitoring data are insufficient to calculate a valid hour of

data if there are less than four data measurements made during the hour.

(5) *Situations that are not deviations.* If an affected source is operated during periods of start-up, shutdown, or malfunction in accordance with the affected source's Start-up, Shutdown, and Malfunction Plan, and any of the situations listed in paragraphs (h)(5)(i) through (iv) of this section occur, such situations shall not be considered to be deviations.

(i) The daily average value of a monitored parameter is above the maximum level or below the minimum level established;

(ii) Monitoring data cannot be collected during monitoring device calibration check or monitoring device malfunction;

(iii) Monitoring data are not collected during periods of start-up, shutdown, or malfunction; and

(iv) Monitoring data are not collected during periods of nonoperation of the affected source or portion thereof (resulting in cessation of the emissions to which the monitoring applies).

(6) *Periods not considered to be part of the period of control or recovery device operation.* The periods listed in paragraphs (h)(6)(i) through (v) of this section are not considered to be part of the period of control or recovery device operation for purposes of determining averages or periods of control device or control technology operation.

(i) Monitoring system breakdowns, repairs, calibration checks, and zero (low-level) and high-level adjustments;

(ii) Start-ups;

(iii) Shutdowns;

(iv) Malfunctions; or

(v) Periods of nonoperation of the affected source (or portion thereof), resulting in cessation of the emissions to which the monitoring applies.

§ 63.1414 Test methods and emission estimation equations.

(a) *Test methods.* When required to conduct a performance test, the owner or operator shall use the test methods specified in paragraphs (a)(1) through (6) of this section, except where another section of this subpart requires either the use of a specific test method or the use of requirements in another subpart containing specific test method requirements.

(1) Method 1 or 1A, 40 CFR part 60, appendix A, shall be used for selection of the sampling sites if the flow measuring device is a pitot tube, except that references to particulate matter in Method 1A do not apply for the purposes of this subpart. No traverse is necessary when Method 2A or 2D, 40 CFR part 60, appendix A is used to determine gas stream volumetric flow rate.

(2) Method 2, 2A, 2C, or 2D, 40 CFR part 60, appendix A, is used for velocity and volumetric flow rates.

(3) Method 3, 40 CFR part 60, appendix A, is used for gas analysis.

(4) Method 4, 40 CFR part 60, appendix A, is used for stack gas moisture.

(5) The following methods shall be used to determine the organic HAP concentration.

(i) Method 316 or Method 320, 40 CFR part 60, appendix A, shall be used to determine the concentration of formaldehyde.

(ii) Method 18, 40 CFR part 60, appendix A, shall be used to determine the concentration of all organic HAP other than formaldehyde.

(iii) Method 308, 40 CFR part 60, appendix A, may be used as an alternative to Method 18 to determine the concentration of methanol.

(6) When complying with the alternative standard, as specified in § 63.1413(f), the owner or operator shall use a Fourier Transform Infrared Spectroscopy (FTIR) instrument following Method PS–15, 40 CFR part 60, appendix B.

(b) *Batch process vent performance testing procedures.*

(1) *Average batch vent flow rate determination.* The average batch vent flow rate for a batch emission episode shall be calculated using Equation 1 of this section:

$$AFR_{episode} = \frac{\sum_{i=1}^{n} FR_i}{n} \qquad \text{[Eq. 1]}$$

Where:

$AFR_{episode}$=Average batch vent flow rate for the batch emission episode, scmm.

FR_i=Volumetric flow rate for individual measurement i, taken every 15 minutes using the procedures in paragraph (a)(2) of this section, scmm.

n=Number of flow rate measurements taken during the batch emission episode.

(2) *Average batch vent concentration determination using an integrated sample.* If an integrated sample is taken over the entire batch emission episode to determine the average batch vent concentration of total organic HAP, organic HAP emissions shall be calculated using Equation 2 of this section:

$$E_{episode} = K\left[\sum_{j=1}^{n}(C_j)(M_j)\right]AFR(T_h) \qquad \text{[Eq. 2]}$$

Where:

$E_{episode}$ = Emissions, kg/episode.

K=Constant, 2.494×10^{-6} (ppmv)$^{-1}$ (gm-mole/scm) (kg/gm) (min/hr), where standard temperature is 20 °C.

C_j=Average batch vent concentration of sample organic HAP component j of the gas stream, dry basis, ppmv.

M_j=Molecular weight of sample organic HAP component j of the gas stream, gm/gm-mole.

AFR=Average batch vent flow rate of gas stream, dry basis, scmm.

T_h=Hours/episode.

n=Number of organic HAP in stream.

(3) *Average batch vent concentration determination using grab samples.* If grab samples are taken to determine the average batch vent concentration of total organic HAP, organic HAP emissions shall be calculated as follows:

(i) For each measurement point, the emission rate shall be calculated using Equation 3 of this section:

$$Epoint = K\left[\sum_{j=1}^{n} C_j M_j\right]FR \qquad \text{[Eq. 3]}$$

Where:

E_{point}=Emission rate for individual measurement point, kg/hr.

K=Constant, 2.494×10^{-6} (ppmv)$^{-1}$ (gm-mole/scm) (kg/gm) (min/hr), where standard temperature is 20 °C.

C_j=Concentration of sample organic HAP component j of the gas stream, dry basis, ppmv.

M_j=Molecular weight of sample organic HAP component j of the gas stream, gm/gm-mole.

FR=Flow rate of gas stream for the measurement point, dry basis, scmm.

n=Number of organic HAP in stream.

(ii) The organic HAP emissions per batch emission episode shall be calculated using Equation 4 of this section:

$$E_{episode} = (DUR)\left[\sum_{i=1}^{n}\frac{E_i}{n}\right] \qquad \text{[Eq. 4]}$$

Where:

$_{episode}$=Emissions, kg/episode.

DUR=Duration of the batch emission episode, hr/episode.

E_i=Emissions for measurement point i, kg/hr.

n=Number of measurements.

(4) *Control device efficiency determination for a batch emission episode.* The control efficiency for the control device shall be calculated using Equation 5 of this section:

$$R = \frac{\sum_{i=1}^{n} E_{inlet,i} - \sum_{i=1}^{n} E_{outlet,i}}{\sum_{i=1}^{n} E_{inlet,i}}(100) \qquad \text{[Eq. 5]}$$

Where:

R=Control efficiency of control device, percent.

E_{inlet}=Mass rate of total organic HAP for batch emission episode i at the inlet to the control device as calculated under paragraph (b)(2) or (b)(3) of this section, kg/episode.

E_{outlet}=Mass rate of total organic HAP for batch emission episode i at the outlet of the control device, as calculated under paragraph (b)(2) or (b)(3) of this section, kg/episode.

n=Number of batch emission episodes in the batch cycle selected to be controlled.

(c) *Percent oxygen correction for combustion control devices.* If the control device is a combustion device, total organic HAP concentrations shall be corrected to 3 percent oxygen when supplemental combustion air is used to combust the emissions. The integrated sampling and analysis procedures of Method 3B, 40 CFR part 60, appendix A, shall be used to determine the actual oxygen concentration ($\%O_{2d}$). The samples shall be taken during the same time that the total organic HAP samples are taken. The concentration corrected to 3 percent oxygen (C_c) shall be computed using Equation 6 of this section:

$$C_c = C_m\left(\frac{17.9}{20.9 - \%O_{2d}}\right) \qquad \text{[Eq. 6]}$$

Where:

C_c=Concentration of total organic HAP corrected to 3 percent oxygen, dry basis, ppmv.

C_m=Total concentration of TOC in vented gas stream, average of samples, dry basis, ppmv.

$\%O_{2d}$=Concentration of oxygen measured in vented gas stream, dry basis, percent by volume.

(d) *Uncontrolled organic HAP emissions.* Uncontrolled organic HAP emissions for individual reactor batch process vents or individual non-reactor batch process vents shall be determined using the procedures specified in paragraphs (d)(1) through (8) of this section. To estimate organic HAP emissions from a batch emissions episode, owners or operators may use either the emissions estimation equations in paragraphs (d)(1) through (4) of this section, or direct measurement as specified in paragraph (d)(5) of this section. Engineering assessment may be used to estimate organic HAP emissions from a batch emission episode only under the conditions described in paragraph (d)(6) of this section. In using the emissions estimation equations in paragraphs (d)(1) through (4) of this section, individual component vapor pressure and molecular weight may be obtained from standard references. Methods to determine individual HAP partial pressures in multicomponent systems are described in paragraph (d)(9) of this section. Other variables in the emissions estimation equations may be obtained through direct measurement, as defined in paragraph (d)(5) of this section; through engineering assessment, as defined in paragraph (d)(6)(ii) of this section; by process knowledge; or by any other appropriate means. Assumptions used in determining these variables shall be documented as specified in § 63.1417. Once organic HAP emissions for the batch emission episode have been determined using either the emissions estimation equations, direct measurement, or engineering assessment, organic HAP emissions from a single batch cycle shall be calculated in accordance with paragraph (d)(7) of this section, and annual organic HAP emissions from the batch process vent shall be calculated in accordance with paragraph (d)(8) of this section.

(1) *Emissions from purging of empty vessels.* Organic HAP emissions from the purging of an empty vessel shall be calculated using Equation 7 of this section. Equation 7 of this section does not take into account evaporation of any residual liquid in the vessel:

$$E_{episode} = \frac{(V_{ves})(P)(MW_{wavg})}{RT}(1 - 0.37^{m}) \qquad \text{[Eq. 7]}$$

Where:

$E_{episode}$=Emissions, kg/episode.

V_{ves}=Volume of vessel, m^3.

P=Total organic HAP partial pressure, kPa.

MW_{wavg}=Weighted average molecular weight of organic HAP in vapor, determined in accordance with paragraph (d)(4)(i)(D) of this section, kg/kmol.

R=Ideal gas constant, 8.314 m^3·kPa/kmol·K.

T=Temperature of vessel vapor space, K.

m=Number of volumes of purge gas used.

(2) *Emissions from purging of filled vessels.* Organic HAP emissions from the purging of a filled vessel shall be calculated using Equation 8 of this section:

$$E_{episode} = \frac{(y)(V_{dr})(P^2)(MW_{wavg})}{RT\left(P - \sum_{i=1}^{n} P_i x_i\right)}(T_m) \qquad \text{[Eq. 8]}$$

Where:

$E_{episode}$=Emissions, kg/episode.

y=Saturated mole fraction of all organic HAP in vapor phase.

V_{dr}=Volumetric gas displacement rate, m^3/min.

P=Pressure in vessel vapor space, kPa.

MW_{wavg}=Weighted average molecular weight of organic HAP in vapor, determined in accordance with paragraph (d)(4)(i)(D) of this section, kg/kmol.

R=Ideal gas constant, 8.314 m^3·kPa/kmol·K.

T=Temperature of vessel vapor space, K.

P_i=Vapor pressure of individual organic HAP i, kPa.

x_i=Mole fraction of organic HAP i in the liquid.

n=Number of organic HAP in stream.

T_m=Minutes/episode.

(3) *Emissions from vapor displacement.* Organic HAP emissions from vapor displacement due to transfer of material into or out of a vessel shall be calculated using Equation 9 of this section:

$$E_{episode} = \frac{(y)(V)(P)(MW_{wavg})}{RT} \qquad \text{[Eq. 9]}$$

Where:

$E_{episode}$=Emissions, kg/episode.

y=Saturated mole fraction of all organic HAP in vapor phase.

V=Volume of gas displaced from the vessel, m^3.

P=Pressure in vessel vapor space, kPa.

MW_{wavg}=Weighted average molecular weight of organic HAP in vapor, determined in accordance with paragraph (d)(4)(i)(D) of this section, kg/kmol.

R=Ideal gas constant, 8.314 m^3·kPa/kmol·K.

T=Temperature of vessel vapor space, K.

(4) *Emissions from heating of vessels.* Organic HAP emissions caused by the heating of a vessel shall be calculated using the procedures in either paragraph (d)(4)(i),(ii), or (iii) of this section, as appropriate.

(i) If the final temperature to which the vessel contents is heated is lower than 50 K below the boiling point of the HAP in the vessel, then organic HAP emissions shall be calculated using the equations in paragraphs (d)(4)(i)(A) through (D) of this section.

(A) Organic HAP emissions caused by heating of a vessel shall be calculated using Equation 10 of this section. The assumptions made for this calculation are atmospheric pressure of 760 millimeters of mercury (mm Hg) and the displaced gas is always saturated with volatile organic compounds (VOC) vapor in equilibrium with the liquid mixture:

$$E_{episode} = \left[\frac{\dfrac{\sum_{i=1}^{n}(P_i)T1}{101.325 - \sum_{i=1}^{n}(P_i)T1} + \dfrac{\sum_{i=1}^{n}(P_i)T2}{101.325 - \sum_{i=1}^{n}(P_i)T2}}{2} \right] * (\Delta\eta)\left[\frac{\left(MW_{wavg,T1} + MW_{wavg,T2}\right)}{2}\right] \quad \text{[Eq. 10]}$$

Where:
$E_{episode}$=Emissions, kg/episode.
$(P_i)_{T1}$, $(P_i)_{T2}$=Partial pressure (kPa) of each organic HAP i in the vessel headspace at initial (T1) and final (T2) temperature.
n=Number of organic HAP in stream.
$\Delta\eta$=Number of kilogram-moles (kg-moles) of gas displaced, determined in accordance with paragraph (d)(4)(i)(B) of this section.
101.325=Constant, kPa.
$(MW_{WAVG,T1})$, $(MW_{WAVG,T2})$=Weighted average molecular weight of total organic HAP in the displaced gas stream, determined in accordance with paragraph (d)(4)(i)(D) of this section, kg/kmol.

(B) The moles of gas displaced, Δ, is calculated using Equation 11 of this section:

$$\Delta\eta = \frac{V_{fs}}{R}\left[\left(\frac{Pa_1}{T_1}\right) - \left(\frac{Pa_2}{T_2}\right)\right] \quad \text{[Eq. 11]}$$

Where:
$\Delta\eta$=Number of kg-moles of gas displaced.
V_{fs}=Volume of free space in the vessel, m^3.
R=Ideal gas constant, 8.314 m^3·kPa/kmol·K.
Pa_1=Initial noncondensible gas partial pressure in the vessel, kPa.
Pa_2=Final noncondensible gas partial pressure in the vessel, kPa.
T_1=Initial temperature of vessel, K.
T_2=Final temperature of vessel, K.

(C) The initial and final pressure of the noncondensible gas in the vessel shall be calculated using Equation 12 of this section:

$$Pa = 101.325 - \sum_{i=1}^{n}(P_i)T \quad \text{[Eq. 12]}$$

Where:
Pa=Initial or final partial pressure of noncondensible gas in the vessel headspace, kPa.
101.325=Constant, kPa.
$(P_i)_T$=Partial pressure of each organic HAP i in the vessel headspace, kPa, at the initial or final temperature (T1 or T2).
n=Number of organic HAP in stream.

(D) The weighted average molecular weight of organic HAP in the displaced gas, MW_{wavg}, shall be calculated using Equation 13 of this section:

$$MW_{wavg} = \frac{\sum_{i=1}^{n}(\text{mass of C})_i(\text{molecular weight of C})_i}{\sum_{i=1}^{n}(\text{mass of C})_i} \quad \text{[Eq. 13]}$$

Where:
C=Organic HAP component
n=Number of organic HAP components in stream.

(ii) If the vessel contents are heated to a temperature greater than 50 K below the boiling point, then organic HAP emissions from the heating of a vessel shall be calculated as the sum of the organic HAP emissions calculated in accordance with paragraphs (d)(4)(ii)(A) and (B) of this section.

(A) For the interval from the initial temperature to the temperature 50 K below the boiling point, organic HAP emissions shall be calculated using Equation 10 of this section, where T_2 is the temperature 50 K below the boiling point.

(B) For the interval from the temperature 50 K below the boiling point to the final temperature, organic HAP emissions shall be calculated as the summation of emissions for each 5 K increment, where the emissions for each increment shall be calculated using Equation 10 of this section.

(*1*) If the final temperature of the heatup is at or lower than 5 K below the boiling point, the final temperature for the last increment shall be the final temperature for the heatup, even if the last increment is less than 5 K.

(*2*) If the final temperature of the heatup is higher than 5 K below the boiling point, the final temperature for the last increment shall be the temperature 5 K below the boiling point, even if the last increment is less than 5 K.

(*3*) If the vessel contents are heated to the boiling point and the vessel is not operating with a condenser, the final temperature for the final increment shall be the temperature 5 K below the boiling point, even if the last increment is less than 5 K.

(iii) If the vessel is operating with a condenser, and the vessel contents are heated to the boiling point, the process condenser, as defined in § 63.1402, is considered part of the process. Organic HAP emissions shall be calculated as the sum of emissions calculated using Equation 10 of this section, which calculates organic HAP emissions due to heating the vessel contents to the temperature of the gas exiting the condenser, and emissions calculated using Equation 9 of this section, which calculates emissions due to the displacement of the remaining saturated noncondensible gas in the vessel. The final temperature in Equation 10 of this section shall be set equal to the exit gas temperature of the condenser. Equation 9 of this section shall be used as written below in Equation 14 of this section, using free space volume, and T is set equal to the condenser exit gas temperature:

$$E_{episode} = \frac{(y)(V_{fs})(P)(MW_{avg})}{RT} \quad \text{[Eq. 14]}$$

Where:
$E_{episode}$=Emissions, kg/episode.
y=Saturated mole fraction of all organic HAP in vapor phase.
V_{fs}=Volume of the free space in the vessel, m^3.
P=Pressure in vessel vapor space, kPa.
MW_{avg}=Weighted average molecular weight of organic HAP in vapor, determined in accordance with paragraph (d)(4)(i)(D) of this section, kg/kmol.
R=Ideal gas constant, 8.314 m^3·kPa/kmol·K.
T=Temperature of condenser exit stream, K.

(5) *Emissions determined by direct measurement.* The owner or operator may estimate annual organic HAP emissions for a batch emission episode by direct measurement. The test methods and procedures specified in paragraphs (a) and (b) of this section shall be used for direct measurement. If direct measurement is used, the owner or operator shall perform a test for the duration of a representative batch emission episode. Alternatively, the owner or operator may perform a test during only those periods of the batch emission episode for which the emission rate for the entire episode can be determined or for which the emissions are greater than the average emission rate of the batch emission episode. The owner or operator choosing either of these options shall develop an emission profile illustrating the emission rate (kilogram per unit time) over the entire batch emission episode, based on either process knowledge or test data, to demonstrate that test periods are representative. Examples of information that could constitute process knowledge include calculations based on material balances and process stoichiometry. Previous test results may be used to develop the emission profile provided the results are still relevant to the current batch process vent conditions. The emission profile shall be included in the site-specific test plan required by § 63.1417(h)(2).

(6) *Emissions determined by engineering assessment.* To use engineering assessment to estimate organic HAP emissions from a batch emission episode, owners or operators shall comply with paragraphs (d)(6)(i) through (iii) of this section.

(i) If the criteria specified in paragraphs (d)(6)(i)(A), (B), and (C) of this section are met for a specific batch emission episode, the owner or operator may use engineering assessment to estimate organic HAP emissions from that batch emission episode.

(A) Previous test data, where the measurement of organic HAP emissions was an outcome of the test, that show a greater than 20 percent discrepancy between the test value and the value estimated using the applicable equations in paragraphs (d)(1) through (4) of this section. Paragraphs (d)(6)(i)(A)(*1*) and (*2*) of this section describe test data that will be acceptable under this paragraph.

(*1*) Test data for the batch emission episode obtained during production of the product for which the demonstration is being made.

(*2*) Test data obtained for a batch emission episode from another process train where the test data were obtained during production of the product for which the demonstration is being made. Test data from another process train may be used only if the owner or operator can demonstrate that the data are representative of the batch emission episode for which the demonstration is being made, taking into account the nature, size, operating conditions, production rate, and sequence of process steps (*e.g.*, reaction, distillation, etc.) of the equipment in the other process train.

(B) Previous test data for the batch emission episode with the highest organic HAP emissions on a mass basis where the measurement of organic HAP emissions was an outcome of the test, where data were obtained during the production of the product for which the demonstration is being made, and where the data show a greater than 20 percent discrepancy between the test value and the value estimated using the applicable equations in paragraphs (d)(1) through (4) of this section. If the criteria in this paragraph are met, then engineering assessment may be used for all batch emission episodes associated with that batch cycle for the batch unit operation.

(C) The owner or operator has requested and been granted approval to use engineering assessment to estimate organic HAP emissions from a batch emissions episode. The request to use engineering assessment to estimate organic HAP emissions from a batch emissions episode shall contain sufficient information and data to demonstrate to the Administrator that engineering assessment is an accurate means of estimating organic HAP emissions for that particular batch emissions episode. The request to use engineering assessment to estimate organic HAP emissions for a batch emissions episode shall be submitted in the Precompliance Report, as required by § 63.1417(d).

(ii) Engineering assessment includes, but is not limited to, the following:

(A) Previous test results, provided the tests are representative of current operating practices;

(B) Bench-scale or pilot-scale test data obtained under conditions representative of current process operating conditions;

(C) Flow rate or organic HAP emission rate specified or implied within a permit limit applicable to the batch process vent; and

(D) Design analysis based on accepted chemical engineering principles, measurable process parameters, or physical or chemical laws or properties. Examples of analytical methods include, but are not limited to:

(*1*) Use of material balances;

(*2*) Estimation of flow rate based on physical equipment design such as pump or blower capacities;

(*3*) Estimation of organic HAP concentrations based on saturation conditions; and

(*4*) Estimation of organic HAP concentrations based on grab samples of the liquid or vapor.

(iii) Data or other information used to demonstrate that the criteria in paragraph (d)(6)(i) of this section have been met shall be reported as specified in paragraphs (d)(6)(iii)(A) and (B) of this section.

(A) Data or other information used to demonstrate that the criteria in paragraphs (d)(6)(i)(A) and (B) of this section have been met shall be reported in the Notification of Compliance Status, as required by § 63.1417(e)(9).

(B) The request for approval to use engineering assessment to estimate organic HAP emissions from a batch emissions episode as allowed under paragraph (d)(6)(i)(C) of this section, and sufficient data or other information for demonstrating to the Administrator that engineering assessment is an accurate means of estimating organic HAP emissions for that particular batch emissions episode shall be submitted with the Precompliance Report, as required by § 63.1417(d).

(7) *Emissions for a single batch cycle.* For each batch process vent, the organic HAP emissions associated with a single batch cycle shall be calculated using Equation 15 of this section:

Where:

$$E_{cycle} = \sum_{i=1}^{n} E_{episode_i} \qquad \text{[Eq. 15]}$$

E_{cycle}=Emissions for an individual batch cycle, kg/batch cycle.

$E_{episode_i}$=Emissions from batch emission episode i, kg/episode.

n=Number of batch emission episodes for the batch cycle.

(8) *Annual emissions from a batch process vent.* Annual organic HAP emissions from a batch process vent shall be calculated using Equation 16 of this section:

$$AE = \sum_{i=1}^{n} (N_i)(E_{cycle_i}) \qquad \text{[Eq. 16]}$$

Where:

AE=Annual emissions from a batch process vent, kg/yr.

N_i=Number of type i batch cycles performed annually, cycles/year.

E_{cycle_i}=Emissions from the batch process vent associated with a single type i batch cycle, as determined in paragraph (d)(7) of this section, kg/batch cycle.

n=Number of different types of batch cycles that cause the emission of organic HAP from the batch process vent.

(9) *Partial pressures in multicomponent systems.* Individual HAP partial pressures in multicomponent systems shall be determined using the appropriate method specified in paragraphs (d)(9)(i) through (iii) of this section.

(i) If the components are miscible, use Raoult's law to calculate the partial pressures;

(ii) If the solution is a dilute aqueous mixture, use Henry's law constants to calculate partial pressures;

(iii) If Raoult's law or Henry's law is not appropriate or available, the owner or operator may use any of the options in paragraph (d)(9)(iii)(A), (B), or (C) of this section.

(A) Experimentally obtained activity coefficients, Henry's law constants, or solubility data;

(B) Models, such as group-contribution models, to predict activity coefficients; or

(C) Assume the components of the system behave independently and use the summation of all vapor pressures from the HAPs as the total HAP partial pressure.

§ 63.1415 Monitoring requirements.

(a) *General requirements.* Each owner or operator of an emission point located at an affected source that uses a control device to comply with the requirements of this subpart and has one or more parameter monitoring level requirement specified under this subpart, shall install the monitoring equipment specified in paragraph (b) of this section in order to demonstrate continued compliance with the provisions of this subpart. All monitoring equipment shall be installed, calibrated, maintained, and operated according to manufacturer's specifications or other written procedures that provide adequate assurance that the equipment would reasonably be expected to monitor accurately.

(1) This monitoring equipment shall be in operation at all times when organic HAP emissions that are required to be controlled as part of complying with the emission limits specified in §§ 63.1404, 63.1405, 63.1406, 63.1407, and 63.1408 are vented to the control device.

(2) For control devices controlling less than 1 ton per year of uncontrolled organic HAP emissions, monitoring shall consist of a daily verification that the control device is operating properly. If the control device is used to control batch process vents alone or in combination with other emission points, the verification may be on a per batch cycle basis. This verification shall include, but not be limited to, a daily or per batch demonstration that the control device is working as designed. The procedure for this demonstration shall be submitted for review and approval as part of the Precompliance Report, as required by § 63.1417(d)(10).

(3) Nothing in this section shall be construed to allow a monitoring parameter excursion caused by an activity that violates other applicable provisions of subpart A, F, or G of this part.

(b) *Monitoring equipment.* The monitoring equipment specified in paragraphs (b)(1) through (8) of this section shall be installed as specified in paragraph (a) of this section. The parameters to be monitored are specified in Table 3 of this subpart.

(1) Where a scrubber is used, the following monitoring equipment is required.

(i) A pH monitoring device equipped with a continuous recorder to monitor the pH of the scrubber effluent.

(ii) A flow measurement device equipped with a continuous recorder shall be located at the scrubber influent for liquid flow. Gas stream flow shall be determined using one of the following procedures:

(A) The owner or operator may determine gas stream flow using the design blower capacity with appropriate adjustments for pressure drop.

(B) If the scrubber is subject to regulations in 40 CFR parts 264 through 266 that required a determination of the liquid to gas (L/G) ratio prior to the applicable compliance date for this subpart, the owner or operator may determine gas stream flow by the method that had been utilized to comply with those regulations. A determination that was conducted prior to the compliance date for this subpart may be utilized to comply with this subpart if it is still representative.

(C) The owner or operator may prepare and implement a gas stream flow determination plan that documents an appropriate method which will be used to determine the gas stream flow. The plan shall require determination of gas stream flow by a method which will at least provide a value for either a representative or the highest gas stream flow anticipated in the scrubber during representative operating conditions other than start-ups, shutdowns, or malfunctions. The plan shall include a description of the methodology to be followed and an explanation of how the selected methodology will reliably determine the gas stream flow, and a description of the records that will be maintained to document the determination of gas stream flow. The owner or operator shall maintain the plan as specified in § 63.1416(a).

(2) Where an absorber is used, a scrubbing liquid temperature monitoring device and a specific gravity monitoring device are required, each equipped with a continuous recorder.

(3) Where a condenser is used, a condenser exit temperature (product side) monitoring device equipped with a continuous recorder is required.

(4) Where a carbon adsorber is used, an integrating regeneration steam flow or nitrogen flow, or pressure monitoring device having an accuracy of ±10 percent of the flow rate, level, or pressure, or better, capable of recording the total regeneration steam flow or nitrogen flow, or pressure (gauge or absolute) for each regeneration cycle; and a carbon bed temperature monitoring device, capable of recording the carbon bed temperature after each regeneration and within 15 minutes of completing any cooling cycle are required.

(5) Where an incinerator is used, a temperature monitoring device equipped with a continuous recorder is required.

(i) Where an incinerator other than a catalytic incinerator is used, the temperature monitoring device shall be installed in the firebox or in the ductwork immediately downstream of the firebox in a position before any substantial heat exchange occurs.

(ii) Where a catalytic incinerator is used, temperature monitoring devices

shall be installed in the gas stream immediately before and after the catalyst bed.

(6) Where a flare is used, a device (including but not limited to a thermocouple, ultra-violet beam sensor, or infrared sensor) capable of continuously detecting the presence of a pilot flame is required.

(7) Where a boiler or process heater of less than 44 megawatts design heat input capacity is used, a temperature monitoring device in the firebox equipped with a continuous recorder is required. Any boiler or process heater in which all vent streams are introduced with the primary fuel or are used as the primary fuel is exempt from this requirement.

(8) As an alternate to paragraphs (b)(1) through (7) of this section, the owner or operator may install an organic monitoring device equipped with a continuous recorder. Said organic monitoring device shall meet the requirements of Performance Specification 8 or 9 of 40 CFR part 60, appendix B, and shall be installed, calibrated, and maintained according to § 63.6.

(c) *Alternative monitoring parameters.* An owner or operator may request approval to monitor parameters other than those specified in Table 3 of this subpart. The request shall be submitted according to the procedures specified in § 63.1417(j). Approval shall be requested if the owner or operator:

(1) Uses a control device or control technology other than those included in paragraph (b) of this section; or

(2) Uses one of the control devices included in paragraph (b) of this section, but seeks to monitor a parameter other than those specified in Table 3 of this subpart.

(d) *Monitoring of bypass lines.* Owners or operators using a vent system that contains bypass lines that could divert emissions away from a control device or control technology used to comply with the provisions of this subpart shall comply with either paragraph (d)(1) or (2) of this section. Equipment such as low leg drains, high point bleeds, analyzer vents, open-ended valves or lines, and pressure relief valves needed for safety purposes are not subject to this paragraph.

(1) Properly install, maintain, and operate a flow indicator that takes a reading at least once every 15 minutes. Records shall be generated as specified in § 63.1416(d)(3). The flow indicator shall be installed at the entrance to any bypass line that could divert emissions away from the control device or control technology and to the atmosphere; or

(2) Secure the bypass line damper or valve in the non-diverting position with a car-seal or a lock-and-key type configuration. A visual inspection of the seal or closure mechanism shall be performed at least once every month to ensure that the damper or valve is maintained in the non-diverting position and emissions are not diverted through the bypass line. Records shall be generated as specified in § 63.1416(d)(3).

(e) *Monitoring for the alternative standards.* For control devices that are used to comply with the provisions of §§ 63.1404(b), 63.1405(b), 63.1406(b), 63.1407(b), or 63.1408(b) the owner or operator shall conduct continuous monitoring of the outlet organic HAP concentration whenever emissions are vented to the control device. Continuous monitoring of outlet organic HAP concentration shall be accomplished using an FTIR instrument following Method PS–15 of 40 CFR part 60, appendix B. The owner or operator shall calculate a daily average outlet organic HAP concentration.

§ 63.1416 Recordkeeping requirements.

(a) *Data retention.* Unless otherwise specified in this subpart, each owner or operator of an affected source shall keep copies of all applicable records and reports required by this subpart for at least 5 years, as specified in paragraph (a)(1) of this section, with the exception listed in paragraph (a)(2) of this section.

(1) All applicable records shall be maintained in such a manner that they can be readily accessed. The most recent 6 months of records shall be retained on site or shall be accessible from a central location by computer or other means that provides access within 2 hours after a request. The remaining 4 and one-half years of records may be retained offsite. Records may be maintained in hard copy or computer-readable form including, but not limited to, on paper, microfilm, computer, floppy disk, CD–ROM, optical disc, magnetic tape, or microfiche.

(2) If an owner or operator submits copies of reports to the appropriate EPA Regional Office, the owner or operator is not required to maintain copies of reports. If the EPA Regional Office has waived the requirement of § 63.10(a)(4)(ii) for submittal of copies of reports, the owner or operator is not required to maintain copies of those reports.

(b) *Start-up, shutdown, and malfunction plan and records.* The owner or operator of an affected source shall develop and implement a start-up, shutdown, and malfunction plan as specified in § 63.6(e)(3) and shall keep the plan on-site. Records shall be kept as specified in paragraphs (b)(1) and (2) of this section. Records are not required for emission points that do not require control under this subpart.

(1) Records of the occurrence and duration of each start-up, shutdown, and malfunction of operation of process equipment, or control devices, or recovery devices, or continuous monitoring systems, or control technologies used to comply with this subpart during which excess emissions (as defined in § 63.1400(k)(4)) occur.

(2) For each start-up, shutdown, or malfunction during which excess emissions (as defined in § 63.1400(k)(4)) occur, records reflecting whether the procedures specified in the affected source's start-up, shutdown, and malfunction plan were followed and documentation of actions taken that are not consistent with the plan. For example, if a start-up, shutdown, and malfunction plan includes procedures for routing a control device to a backup control device (e.g., a halogenated stream could be routed to a flare during periods when the primary control device is out of service), records shall be kept of whether the plan was followed. These records may take the form of a "checklist" or other form of recordkeeping that confirms conformance with the start-up, shutdown, and malfunction plan for the event.

(c) *Monitoring records.* Owners or operators required to comply with § 63.1415 and, therefore, required to keep continuous records shall keep records as specified in paragraphs (c)(1) through (6) of this section.

(1) The owner or operator shall record either each measured data value or average values for 1 hour or shorter periods calculated from all measured data values during each period. If values are measured more frequently than once per minute, a single value for each minute may be used to calculate the hourly (or shorter period) average instead of all measured values. Owners or operators of batch process vents shall record each measured data value; if values are measured more frequently than once per minute, a single value for each minute may be recorded instead of all measured values.

(2) Daily average, batch cycle daily average, or block average values of each continuously monitored parameter shall be calculated for each operating day as specified in paragraphs (c)(2)(i) and (ii) of this section, except as specified in paragraphs (c)(3) and (4) of this section. The option of conducting parameter monitoring for batch process vents on a batch cycle daily average basis or a

block average basis is described in paragraph (d)(2) of this section.

(i) The daily average value, batch cycle daily average, or block average shall be calculated as the average of all parameter values recorded during the operating day, or batch cycle, as appropriate, except as specified in paragraph (c)(4) of this section. For batch process vents, only parameter values recorded during those batch emission episodes, or portions thereof, in the batch cycle that the owner or operator has selected to control in order to comply shall be used to calculate the average. The calculated average shall cover a 24-hour period if operation is continuous, or the number of hours of operation per operating day if operation is not continuous for daily average values or batch cycle daily average values. The calculated average shall cover the entire period of the batch cycle for block average values. As specified in § 63.1413(a)(4)(i)(C)(*3*), the owner or operator shall provide the information needed to calculate batch cycle daily averages for operating days that include partial batch cycles.

(ii) The operating day shall be the period the owner or operator specifies in the operating permit or the Notification of Compliance Status for purposes of determining daily average values or batch cycle daily average values of monitored parameters. The block shall be the entire period of the batch cycle, as specified by the owner or operator in the operating permit or the Notification of Compliance Status for purposes of determining block average values of monitored parameters.

(3) If all recorded values for a monitored parameter during an operating day or block are above the minimum level or below the maximum level established in the Notification of Compliance Status or operating permit, the owner or operator may record that all values were above the minimum level or below the maximum level rather than calculating and recording a daily average, or block average, for that operating day. For these operating days or blocks, the records required in paragraph (c)(1) of this section shall also be retained for 5 years.

(4) Monitoring data recorded during periods identified in paragraphs (c)(4)(i) through (v) of this section shall not be included in any average computed under this subpart. Records shall be kept of the times and durations of all such periods and any other periods during process or control device or recovery device or control technology operation when monitors are not operating:

(i) Monitoring system breakdowns, repairs, calibration checks, and zero (low-level) and high-level adjustments;

(ii) Start-ups;

(iii) Shutdowns;

(iv) Malfunctions; and

(v) Periods of non-operation of the affected source (or portion thereof) resulting in cessation of the emissions to which the monitoring applies.

(5) The owner or operator who has received approval to monitor different parameters, under § 63.1417(j) as allowed under § 63.1415(e), than those specified for storage vessels, continuous process vents, or batch process vents shall retain for a period of 5 years each record specified in their approved Alternative Monitoring Parameters request.

(6) The owner or operator who has received approval to use alternative continuous monitoring and recordkeeping provisions as specified in § 63.1417(k) shall retain for a period of 5 years each record specified in their approved Alternative Continuous Monitoring request.

(d) *Batch process vent records.* (1) *Compliance demonstration records.* Each owner or operator of a batch process vent complying with § 63.1406 or § 63.1407 shall keep the following records, as applicable, readily accessible.

(i) If a batch process vent is seeking to demonstrate compliance with the alternative standard specified in § 63.1406(b) or § 63.1407(b), results of the initial compliance demonstration specified in § 63.1413(f).

(ii) If a batch process vent is seeking to demonstrate compliance with the percent reduction requirements of § 63.1406(a)(1)(ii) or § 63.1407(a)(2)(ii), records documenting the batch cycle percent reduction or overall percent reduction, as appropriate, as specified in § 63.1413(e)(1)(iii).

(iii) When using a flare to comply with § 63.1406(a)(1)(i) or § 63.1407(a)(2)(i):

(A) The flare design (i.e., steam-assisted, air-assisted or non-assisted);

(B) All visible emission readings, heat content determinations, flow rate measurements, and exit velocity determinations made during the compliance determination required by § 63.1413(g); and

(C) Periods when all pilot flames were absent during the compliance determination required by § 63.1413(g).

(iv) The following information when using a control device or control technology, other than a flare, to achieve compliance with the percent reduction requirement of § 63.1406(a)(1)(ii) or § 63.1407(a)(2)(ii):

(A) For an incinerator, non-combustion control device, or other control technology, the percent reduction of organic HAP achieved for emissions vented to the control device or control technology, as determined using the procedures specified in § 63.1413(e)(1);

(B) For a boiler or process heater, a description of the location at which the vent stream is introduced into the boiler or process heater; and

(C) For a boiler or process heater with a design heat input capacity of less than 44 megawatts and where the vent stream is not introduced with the primary fuel or used as the primary fuel, the percent reduction of organic HAP achieved for emissions vented to the control device, as determined using the procedures specified in § 63.1413(e)(1).

(v) If a batch process vent is seeking to demonstrate compliance with the mass emission limits specified in § 63.1406(a)(1)(iii) or (a)(2)(iii) or specified in § 63.1407(b)(2), the following information:

(A) Results of the initial compliance demonstration specified in § 63.1413(e)(2).

(B) The organic HAP emissions from the batch process vent associated with each single type of batch cycle ($E_{cycle\ i}$) determined as specified in § 63.1413(e)(2).

(C) The site-specific emission limit required by § 63.1413(e)(2), as appropriate.

(vi) If an owner or operator designates a condenser sometimes operated as a process condenser as a control device, comply with either paragraph (d)(1)(vi)(A) or (B) of this section.

(A) Retain information, data, analyses to document inprocess recycling of the material recovered when the condenser is operating as a control device.

(B) When requested by the Administrator, demonstrate that material recovered by the condenser operating as a control device is reused in a manner meeting the definition of inprocess recycling.

(2) *Establishment of parameter monitoring level records.* For each parameter monitored according to § 63.1415(b) and Table 3 of this subpart, or for alternate parameters and/or parameters for alternate control devices or control technologies monitored according to § 63.1417(j) as allowed under § 63.1415(e), maintain documentation showing the establishment of the level that indicates proper operation of the control device or control technology as required by § 63.1415(c) for parameters specified in § 63.1415(b) and as required by § 63.1417(j) for alternate parameters. An

owner or operator may choose to monitor operating parameters for batch process vents on a batch cycle daily average basis or on a block average basis. The batch cycle daily average is based on parameter monitoring accomplished during the operating day (i.e., a 24-hour basis). The block average is based on the parameter monitoring accomplished during a single batch cycle. As defined in § 63.1402, the block shall be the period of time equal to a single batch cycle. Monitored parameter documentation shall include the following:

(i) Parameter monitoring data used to establish the level.

(ii) Identification that the parameter monitoring level is associated with a batch cycle daily average or a block average.

(iii) A definition of the batch cycle or block, as appropriate.

(3) *Controlled batch process vent continuous compliance records.* Continuous compliance records shall be kept as follows:

(i) Each owner or operator of a batch process vent that uses a control device or control technology to comply with the percent reduction requirements of § 63.1406(a)(1)(ii) or § 63.1407(a)(2)(ii) shall keep the following records, as applicable, readily accessible:

(A) Continuous records of the equipment operating parameters specified to be monitored under § 63.1415(b) as applicable, and listed in Table 3 of this subpart, or specified by the Administrator in accordance with § 63.1417(f) as allowed under § 63.1415(e). Said records shall be kept as specified under paragraph (c) of this section, except as follows:

(*1*) For carbon adsorbers, the records specified in Table 3 of this subpart shall be maintained in place of continuous records.

(*2*) For flares, the records specified in Table 4 of this subpart shall be maintained in place of continuous records.

(B) Records of the batch cycle daily average value or block average value of each continuously monitored parameter, as specified in paragraph (c) of this section.

(ii) Each owner or operator of a batch process vent that uses a control device or control technology to comply with § 63.1406 or § 63.1407 shall keep the following records, as applicable, readily accessible:

(A) Hourly records of whether the flow indicator for bypass lines specified in § 63.1415(d) was operating and whether a diversion was detected at any time during the hour. Also, records of the time and duration periods when the vent is diverted from the control device or control technology or the flow indicator specified in § 63.1415(d) is not operating.

(B) Where a seal or closure mechanism is used to comply with § 63.1415(d), hourly records of whether a diversion was detected at any time are not required. The owner or operator shall record whether the monthly visual inspection of the seals or closure mechanisms has been done and shall record the occurrence of all periods when the seal mechanism is broken, the bypass line damper or valve position has changed, or the key for a lock-and-key type configuration has been checked out, and records of any car-seal that has broken.

(C) Records specifying the times and duration of periods of monitoring system breakdowns, repairs, calibration checks, and zero (low-level) and high-level adjustments. In addition, records specifying any other periods of process or control device operation or control technology operation when monitors are not operating.

(iii) Each owner or operator of a batch process vent seeking to demonstrate compliance with the alternative standard, as specified in § 63.1406(b) or § 63.1407(b), shall keep the records of continuous emissions monitoring described in § 63.1416(c).

(iv) Each owner or operator of a batch process vent seeking to demonstrate compliance with the mass emission limits, specified in § 63.1406(a)(1)(iii) or (a)(2)(iii), shall keep the following records, as applicable, readily accessible.

(A) The cumulative average monthly emission rate or the 12-month rolling average monthly emission rate, as appropriate.

(B) If there is a deviation from the mass emission limit, as specified in § 63.1413(h), the individual monthly emission rate data points making up the cumulative average monthly emission rate or the 12-month rolling average monthly emission rate, as appropriate.

(C) If it becomes necessary to redetermine ($E_{cycle\ i}$) for a reactor batch process vent, as specified in § 63.1413(e)(2), the new value(s) for ($E_{cycle\ i}$).

(D) If an owner or operator is demonstrating compliance using the procedures in § 63.1413(e)(2), the monthly value of the site-specific emission limit developed under § 63.1413(e)(2).

(e) *Aggregate batch vent stream records.* (1) *Compliance demonstration records.* Each owner or operator of an aggregate batch vent stream complying with § 63.1408(a)(1) or (2) shall keep the following records, as applicable, readily accessible:

(i) If an aggregate batch vent stream is in compliance with the percent reduction requirements of § 63.1408(a)(1)(ii) or (a)(2)(ii), owners or operators shall comply with the recordkeeping requirements for continuous process vents specified in 40 CFR part 63, subpart SS.

(ii) If an aggregate batch vent stream is in compliance with the alternative standard specified in § 63.1408(b), results of the initial compliance demonstration specified in § 63.1413(f).

(iii) When using a flare to comply with § 63.1408(a)(1)(i) or (a)(2)(i):

(A) The flare design (i.e., steam-assisted, air-assisted or non-assisted).

(B) All visible emission readings, heat content determinations, flow rate measurements, and exit velocity determinations made during the compliance determination required by § 63.1413(g).

(C) Periods when all pilot flames were absent during the compliance determination required by § 63.1413(g).

(iv) If an aggregate batch vent stream is seeking to comply with the mass emission limits specified in § 63.1408(b)(2), results of the initial compliance demonstration specified in § 63.1413(e)(2). In addition, for each batch process vent, the emissions associated with each single type of batch cycle ($E_{cycle\ i}$), determined as specified in § 63.1413(e)(2), shall be recorded.

(2) *Establishment of parameter monitoring level records.* For each parameter monitored according to § 63.1415(b) and Table 3 of this subpart, or for alternate parameters and/or parameters for alternate control devices monitored according to § 63.1417(j) as allowed under § 63.1415(e), maintain documentation showing the establishment of the level that indicates proper operation of the control device as required by § 63.1415(c) for parameters specified in § 63.1415(b) and as required by § 63.1417(j) for alternate parameters. Monitored parameter documentation shall include the parameter monitoring data used to establish the level.

(3) *Controlled aggregate batch vent streams continuous compliance records.* The following continuous compliance records shall be kept, as applicable:

(i) Each owner or operator of an aggregate batch vent stream that uses a control device to comply with the percent reduction requirement of § 63.1408(a)(1)(ii) or (a)(2)(ii) shall keep the following records, as applicable, readily accessible:

(A) Continuous records of the equipment operating parameters

specified to be monitored under § 63.1415(b) as applicable, and listed in Table 3 of this subpart, or specified by the Administrator in accordance with § 63.1417(j) as allowed under § 63.1415(e). Records shall be kept as specified under paragraph (c) of this section, except as follows:

(1) For carbon adsorbers, the records specified in Table 3 of this subpart shall be maintained in place of continuous records.

(2) For flares, the records specified in Table 3 of this subpart shall be maintained in place of continuous records.

(B) Records of the daily average value of each continuously monitored parameter, as specified in paragraph (c) of this section.

(ii) Each owner or operator of an aggregate batch vent stream that uses a control device to comply with paragraph § 63.1408(a)(1) or (2) of this section shall keep the following records, as applicable, readily accessible:

(A) Hourly records of whether the flow indicator for bypass lines specified in § 63.1415(d) was operating and whether a diversion was detected at any time during the hour. Also, records of the times and durations of periods when the vent is diverted from the control device or the flow indicator specified in § 63.1415(d) is not operating.

(B) Where a seal or closure mechanism is used to comply with § 63.1415(d), hourly records of whether a diversion was detected at any time are not required. The owner or operator shall record whether the monthly visual inspection of the seals or closure mechanisms has been done, and shall record the occurrence of all periods when the seal mechanism is broken, the bypass line damper or valve position has changed, or the key for a lock-and-key type configuration has been checked out, and records of any car-seal that has broken.

(C) Records specifying the times and duration of periods of monitoring system breakdowns, repairs, calibration checks, and zero (low-level) and high-level adjustments. In addition, records specifying any other periods of process or control device operation when monitors are not operating.

(iii) Each owner or operator of an aggregate batch vent stream seeking to demonstrate compliance with the alternative standard, as specified in § 63.1408(b), shall keep the records of continuous emissions monitoring described in § 63.1416(c).

(iv) Each owner or operator of an aggregate batch vent stream seeking to demonstrate compliance with the mass emission limits, specified in § 63.1408(b)(2), shall keep the following records, as applicable, readily accessible:

(A) The rolling average monthly emission rate or the 12-month rolling average monthly emission rate, as appropriate.

(B) If there is a deviation from the emission limit, as specified in § 63.1413(h)(1), the individual monthly emission rate data points making up the rolling average monthly emission rate or the 12-month rolling average monthly emission rate, as appropriate.

(C) If it becomes necessary to redetermine (E_{cycle}) for a reactor batch process vent, as specified in § 63.1413(e)(2), the new value(s) for (E_{cycle}).

(f) *Continuous process vent records.* (1) *TRE index value records.* Each owner or operator of a continuous process vent shall maintain records of measurements, engineering assessments, and calculations performed according to the procedures of § 63.1412(j) to determine the TRE index value. Documentation of engineering assessments, described in § 63.1412(k), shall include all data, assumptions, and procedures used for the engineering assessments.

(2) *Volumetric flow rate records.* Each owner or operator of a continuous process vent shall record the volumetric flow rate as measured using the sampling site and volumetric flow rate determination procedures (if applicable) specified in § 63.1412(b) and (f) or determined through engineering assessment as specified in § 63.1412(k).

(3) *Organic HAP concentration records.* Each owner or operator shall record the organic HAP concentration as measured using the sampling site and organic HAP concentration determination procedures specified in § 63.1412(b)and (e), or determined through engineering assessment as specified in § 63.1412(k).

(4) *Process change records.* Each owner or operator of a continuous process vent shall keep up-to-date, readily accessible records of any process changes that change the control applicability for a continuous process vent. Records are to include any recalculation or measurement of the flow rate, organic HAP concentration, and TRE index value.

(g) *Other records or documentation.* (1) For continuous monitoring systems used to comply with this subpart, owners or operators shall keep records documenting the completion of calibration checks and records documenting the maintenance of continuous monitoring systems that are specified in the manufacturer's instructions or that are specified in other written procedures that provide adequate assurance that the equipment would reasonably be expected to monitor accurately.

(2) The owner or operator of an affected source granted a waiver under § 63.10(f) shall maintain any information demonstrating whether an affected source is meeting the requirements for a waiver of recordkeeping or reporting requirements.

(3) Owners or operators using the exemption from the equipment leak provisions provided by § 63.1400(f) shall comply with either paragraph (g)(3)(i) or (ii) of this section.

(i) The owner or operator shall retain information, data, and analysis used to document the basis for using the exemption provided by § 63.1400(f). Such information, data, and analysis shall be retained for the 12-month period preceding December 14, 1998 and for each 12-month period the affected source is in operation and using the exemption provided by § 63.1400(f). The beginning of each 12-month period shall be the anniversary of December 14, 1998.

(ii) When requested by the Administrator, the owner or operator shall demonstrate that actual annual production is equal to or less than 800 megagrams per year of amino/phenolic resin for the 12-month period preceding December 14, 1998, and for each 12-month period the affected source has been in operation and using the exemption provided by § 63.1400(f). The beginning of each 12-month period shall be the anniversary of December 14, 1998.

(4) The owner or operator of a heat exchange system located at an affected source shall retain the following records:

(i) Monitoring data required by § 63.1409 indicating a leak and the date when the leak was detected, and if demonstrated not to be a leak, the basis for that determination.

(ii) Records of any leaks detected by procedures subject to § 63.1409(c)(2) and the date the leak was detected.

(iii) The dates of efforts to repair leaks.

(iv) The method or procedure used to confirm repair of a leak and the date repair was confirmed.

(h) *Reduced recordkeeping program.* For any parameter with respect to any item of equipment, the owner or operator may implement the recordkeeping requirements specified in paragraph (h)(1) or (2) of this section as alternatives to the provisions specified in this subpart for storage vessels,

continuous process vents, batch process vents, or aggregate batch vent streams. The owner or operator shall retain for a period of 5 years each record required by paragraph (h)(1) or (2) of this section.

(1) The owner or operator may retain only the daily average, batch cycle daily average, or block average value, and is not required to retain more frequent values, for a parameter with respect to an item of equipment, if the requirements of paragraphs (h)(1)(i) through (vi) of this section are met. An owner or operator electing to comply with the requirements of paragraph (h)(1) of this section shall notify the Administrator in the Notification of Compliance Status Report required under § 63.1417(e) or, if the Notification of Compliance Status has already been submitted, in the Periodic Report immediately preceding implementation of the requirements of this paragraph as specified in § 63.1417(f)(10).

(i) The monitoring system is capable of detecting unrealistic or impossible data during periods of operation other than start-ups, shutdowns, or malfunctions (e.g., a temperature reading of −200 °C on a boiler) and will alert the operator by alarm or other means. The owner or operator shall record the occurrence. All instances of the alarm or other alert in an operating day or block constitute a single occurrence.

(ii) The monitoring system generates, updated at least hourly throughout each operating day, a running average of the parameter values that have been obtained during that operating day or block, and the capability to observe this running average is readily available on-site to the Administrator during the operating day. The owner or operator shall record the occurrence of any period meeting the criteria in paragraphs (h)(1)(ii)(A) through (C) of this section. All instances in an operating day or block constitute a single occurrence:

(A) The running average is above the maximum or below the minimum established limits;

(B) The running average is based on at least six 1-hour average values; and

(C) The running average reflects a period of operation other than a start-up, shutdown, or malfunction.

(iii) The monitoring system is capable of detecting unchanging data during periods of operation other than start-ups, shutdowns, or malfunctions, except in circumstances where the presence of unchanging data is the expected operating condition based on past experience (e.g., pH in some scrubbers) and will alert the operator by alarm or other means. The owner or operator shall record the occurrence. All instances of the alarm or other alert in an operating day or block constitute a single occurrence.

(iv) The monitoring system will alert the owner or operator by an alarm or other means if the running average parameter value calculated under paragraph (h)(1)(ii) of this section reaches a set point that is appropriately related to the established limit for the parameter that is being monitored.

(v) The owner or operator shall verify the proper functioning of the monitoring system, including its ability to comply with the requirements of paragraphs (h)(1)(i) through (iv) of this section, at the times specified in paragraphs (h)(1)(v)(A) through (C). The owner or operator shall document that the required verifications occurred.

(A) Upon initial installation.

(B) Annually after initial installation.

(C) After any change to the programming or equipment constituting the monitoring system which might reasonably be expected to alter the monitoring system's ability to comply with the requirements of this section.

(vi) The owner or operator shall retain the records identified in paragraphs (h)(1)(vi)(A) through (D) of this section.

(A) Identification of each parameter for each item of equipment for which the owner or operator has elected to comply with the requirements of paragraph (h)(1) of this section.

(B) A description of the applicable monitoring system(s) and how compliance will be achieved with each requirement of paragraphs (h)(1)(i) through (v) of this section. The description shall identify the location and format (e.g., on-line storage, log entries) for each required record. If the description changes, the owner or operator shall retain, as provided in paragraph (a) of this section, except as provided in paragraph (h)(1)(vi)(D) of this section, both the current and the most recent superseded description.

(C) A description and the date of any change to the monitoring system that would reasonably be expected to impair its ability to comply with the requirements of paragraph (h) of this section.

(D) Owners and operators subject to paragraph (h)(1)(vi)(B) of this section shall retain the current description of the monitoring system as long as the description is current. The current description shall, at all times, be retained on-site or be accessible from a central location by computer or other means that provides access within 2 hours after a request. The owner or operator shall retain all superseded descriptions for at least 5 years after the date of their creation. Superseded descriptions shall be retained on-site (or accessible from a central location by computer or other means that provides access within 2 hours after a request) for at least 6 months after their creation. Thereafter, superseded descriptions may be stored off-site.

(2) If an owner or operator has elected to implement the requirements of paragraph (h)(1) of this section for a parameter with respect to an item of equipment and a period of 6 consecutive months has passed without any deviation as defined in paragraph (h)(2)(iv) of this section, the owner or operator is no longer required to record the daily average, batch cycle daily average, or block average value for any operating day when the daily average, batch cycle daily average, or block average value is less than the maximum or greater than the minimum established limit. With approval by the Administrator, monitoring data generated prior to the compliance date of this subpart shall be credited toward the period of 6 consecutive months if the parameter limit and the monitoring accomplished during the period prior to the compliance date were required and/or approved by the Administrator.

(i) If the owner or operator elects not to retain the daily average, batch cycle daily average, or block average values, the owner or operator shall notify the Administrator in the next Periodic Report as specified in § 63.1417(f)(11). The notification shall identify the parameter and unit of equipment.

(ii) If, on any operating day or during any block after the owner or operator has ceased recording the daily average, batch cycle daily average, or block average values as provided in paragraph (h)(2) of this section, there is a deviation as defined in paragraph (h)(2)(iv) of this section, the owner or operator shall immediately resume retaining the daily average, batch cycle daily average, or block average value for each operating day and shall notify the Administrator in the next Periodic Report. The owner or operator shall continue to retain each daily average, batch cycle daily average, or block average value until another period of 6 consecutive months has passed without a deviation as defined in paragraph (h)(2)(iv) of this section.

(iii) The owner or operator shall retain the records specified in paragraphs (h)(1)(i) through (iv) of this section for the duration specified in paragraph (h) of this section. For any calendar week, if compliance with paragraphs (h)(1)(i) through (iv) of this section does not result in retention of a record of at least one occurrence or measured parameter value, the owner or operator shall

record and retain at least one value during a period of operation other than a start-up, shutdown, or malfunction.

(iv) For purposes of paragraph (h)(2) of this section, a deviation means that the daily average, batch cycle daily average, or block average value of monitoring data for a parameter is greater than the maximum, or less than the minimum established value, except that the daily average, batch cycle daily average, or block average value during any start-up, shutdown, or malfunction shall not be considered a deviation for purposes of paragraph (h)(2) of this section, if the owner or operator follows the applicable provisions of the start-up, shutdown, and malfunction plan required by § 63.6(e)(3).

§ 63.1417 Reporting requirements.

(a) *Reporting and notification.* In addition to the reports and notifications required by subpart A of this part as specified in Table 1 of this subpart, the owner or operator of an affected source shall prepare and submit the reports listed in paragraphs (d) through (i) of this section as applicable. All reports required by this subpart and the schedule for their submittal are listed in Table 5 of this subpart.

(b) *General.* Owners and operators are required to meet the reporting requirements of this subpart unless they can demonstrate that failure to submit information required to be included in a specified report was due to the circumstances described in paragraphs (b)(1) through (3) of this section. Examples of circumstances where this paragraph may apply include information related to newly-added equipment or emission points, changes in the process, changes in equipment required or utilized for compliance with the requirements of this subpart, or changes in methods or equipment for monitoring, recordkeeping, or reporting.

(1) The information was not known in time for inclusion in the report specified by this subpart.

(2) The owner or operator has been diligent in obtaining the information.

(3) The owner or operator submits a report according to the provisions of paragraphs (b)(3)(i) through (iii) of this section, as appropriate.

(i) If this subpart expressly provides for supplements to the report in which the information is required, the owner or operator shall submit the information as a supplement to that report. The information shall be submitted no later than 60 days after it is obtained, unless otherwise specified in this subpart.

(ii) If this subpart does not expressly provide for supplements, but the owner or operator must submit a request for revision of an operating permit pursuant to 40 CFR part 70 or part 71 due to circumstances to which the information pertains, the owner or operator shall submit the information with the request for revision to the operating permit.

(iii) In any case not addressed by paragraph (b)(3)(i) or paragraph (b)(3)(ii) of this section, the owner or operator shall submit the information with the first Periodic Report, as required by this subpart, which has a submission deadline at least 60 days after the information is obtained.

(c) *Submittals.* All reports required under this subpart shall be sent to the Administrator at the appropriate address listed in § 63.13. If acceptable to both the Administrator and the owner or operator of an affected source, reports may be submitted on electronic media.

(d) *Precompliance Report.* Owners or operators of affected sources requesting an extension for compliance; requesting approval to use alternative monitoring parameters, alternative continuous monitoring and recordkeeping, or alternative controls; requesting approval to use engineering assessment to estimate organic HAP emissions from a batch emissions episode as described in § 63.1414(d)(6)(i)(C); wishing to establish parameter monitoring levels according to the procedures contained in § 63.1413(a)(4)(ii); establishing parameter monitoring levels based on a design evaluation as specified in § 63.1413(a)(3); following the procedures in § 63.1413(e)(2); or requesting approval to incorporate a provision for ceasing to collect monitoring data during a start-up, shutdown, or malfunction into the startup, shutdown, and malfunction plan when that monitoring equipment would be damaged if it did not cease to collect monitoring data, as permitted under § 63.1417(d)(9), shall submit a Precompliance Report according to the schedule described in paragraph (d)(1) of this section. The Precompliance Report shall contain the information specified in paragraphs (d)(2) through (11) of this section, as appropriate.

(1) The Precompliance Report shall be submitted to the Administrator no later than 12 months prior to the compliance date. Unless the Administrator objects to a request submitted in the Precompliance Report within 45 days after its receipt, the request shall be deemed approved. For new affected sources, the Precompliance Report shall be submitted to the Administrator with the application for approval of construction or reconstruction required by § 63.5(d), as specified on Table 1 of this subpart. Supplements to the Precompliance Report may be submitted as specified in paragraph (d)(11) of this section.

(2) A request for an extension for compliance, as specified in § 63.1401(d), may be submitted in the Precompliance Report. The request for a compliance extension will include the data outlined in § 63.6(i)(6)(i)(A), (B), and (D), as required in § 63.1401(d)(1).

(3) The alternative monitoring parameter information required in paragraph (j) of this section shall be submitted in the Precompliance Report if, for any emission point, the owner or operator of an affected source seeks to comply through the use of a control technique other than those for which monitoring parameters are specified in this subpart or seeks to comply by monitoring a different parameter than those specified in this subpart.

(4) If the affected source seeks to comply using alternative continuous monitoring and recordkeeping as specified in paragraph (k) of this section, the owner or operator shall submit the information requested in paragraph (d)(4)(i) or (ii) of this section in the Precompliance Report:

(i) The owner or operator shall submit notification of the intent to use the provisions specified in paragraph (k) of this section; or

(ii) The owner or operator shall submit a request for approval to use alternative continuous monitoring and recordkeeping provisions as specified in paragraph (k) of this section.

(5) The owner or operator shall report the intent to use alternative controls to comply with the provisions of this subpart in the Precompliance Report. The Administrator may deem the alternative controls to be equivalent to the controls required by the standard under the procedures outlined in § 63.6(g).

(6) If a request for approval to use engineering assessment to estimate organic HAP emissions from a batch emissions episode, as specified in § 63.1414(d)(6)(i)(C), is being made, the information required by § 63.1414(d)(6)(iii)(B) shall be submitted in the Precompliance Report.

(7) If an owner or operator elects to establish parameter monitoring levels according to the procedures contained in § 63.1413(a)(4)(ii), or will be establishing parameter monitoring levels based on a design evaluation as specified in § 63.1413(a)(3), the following information shall be submitted in the Precompliance Report:

(i) Identification of which procedures (*i.e.*, § 63.1413(a)(1)(i) or (ii)) are to be used; and

(ii) A description of how the parameter monitoring level is to be

established. If the procedures in § 63.1413(a)(4)(ii) are to be used, a description of how performance test data will be used shall be included.

(8) If an owner or operator is complying with the mass emission limit specified in § 63.1406(a)(1)(iii) or (a)(2)(iii), § 63.1407(b)(2), or § 63.1408(b)(2), the sample of production records specified in § 63.1413(e)(2) shall be submitted in the Precompliance Report.

(9) If the owner or operator is requesting approval to incorporate a provision for ceasing to collect monitoring data during a start-up, shutdown, or malfunction into the start-up, shutdown, and malfunction plan when that monitoring equipment would be damaged if it did not cease to collect monitoring data, the information specified in paragraphs (d)(9)(i) and (ii) of this section shall be supplied in the Precompliance Report or in a supplement to the Precompliance Report. The Administrator shall evaluate the supporting documentation and shall approve the request only if, in the Administrator's judgment, the specific monitoring equipment would be damaged by the contemporaneous start-up, shutdown, or malfunction.

(i) Documentation supporting a claim that the monitoring equipment would be damaged by the contemporaneous start-up, shutdown, or malfunction.

(ii) A request to incorporate such a provision for ceasing to collect monitoring data during a start-up, shutdown, or malfunction into the start-up, shutdown, and malfunction plan.

(10) The procedure for a control device controlling less than 1 ton per year of uncontrolled organic HAP emissions shall be submitted, as specified in § 63.1415(a)(2). Such a procedure shall meet the requirements specified in § 63.1415(a)(2).

(11) Supplements to the Precompliance Report may be submitted as specified in paragraph (d)(11)(i) or (ii) of this section. Unless the Administrator objects to a request submitted in a supplement to the Precompliance Report within 45 days after its receipt, the request shall be deemed approved.

(i) Supplements to the Precompliance Report may be submitted to clarify or modify information previously submitted.

(ii) Supplements to the Precompliance Report may be submitted to request approval to use alternative monitoring parameters, as specified in paragraph (j) of this section; to use alternative continuous monitoring and recordkeeping, as specified in paragraph (k) of this section; to use alternative controls, as specified in paragraph (d)(5) of this section; to use engineering assessment to estimate organic HAP emissions from a batch emissions episode, as specified in paragraph (d)(6) of this section; to establish parameter monitoring levels according to the procedures contained in § 63.1413(a)(4)(ii) or (a)(3), as specified in paragraph (d)(7) of this section; or to include a provision for ceasing to collect monitoring data during a start-up, shutdown, or malfunction in the start-up, shutdown, and malfunction plan when that monitoring equipment would be damaged if it did not cease to collect monitoring data, as specified in paragraph (d)(9) of this section.

(e) *Notification of Compliance Status.* For existing and new affected sources, a Notification of Compliance Status shall be submitted within 150 days after the compliance dates specified in § 63.1401. For equipment leaks, the Notification of Compliance Status shall contain the information specified in 40 CFR part 63, subpart UU. For storage vessels, continuous process vents, batch process vents, and aggregate batch vent streams, the Notification of Compliance Status shall contain the information listed in paragraphs (e)(1) through (6) of this section.

(1) The results of any emission point applicability determinations, performance tests, design evaluations, inspections, continuous monitoring system performance evaluations, any other information used to demonstrate compliance, and any other information, as appropriate, required to be included in the Notification of Compliance Status under 40 CFR part 63, subpart WW and subpart SS, as referred to in § 63.1404 for storage vessels; under 40 CFR part 63, subpart SS, as referred to in § 63.1405 for continuous process vents; under § 63.1416(f)(1) through (3) for continuous process vents; under § 63.1416(d)(1) for batch process vents; and under § 63.1416(e)(1) for aggregate batch vent streams. In addition, each owner or operator shall comply with paragraphs (e)(1)(i) and (ii) of this section.

(i) For performance tests, applicability determinations, and estimates of organic HAP emissions that are based on measurements, the Notification of Compliance Status shall include one complete test report, as described in paragraph (e)(1)(ii) of this section, for each test method used for a particular kind of emission point. For additional tests performed for the same kind of emission point using the same method, the results and any other required information shall be submitted, but a complete test report is not required.

(ii) A complete test report shall include a brief process description, sampling site description, description of sampling and analysis procedures and any modifications to standard procedures, quality assurance procedures, record of operating conditions during the test, record of preparation of standards, record of calibrations, raw data sheets for field sampling, raw data sheets for field and laboratory analyses, documentation of calculations, and any other information required by the test method.

(2) For each monitored parameter for which a maximum or minimum level is required to be established, the Notification of Compliance Status shall contain the information specified in paragraphs (e)(2)(i) through (iv) of this section, unless this information has been established and provided in the operating permit.

(i) The required information shall include the specific maximum or minimum level of the monitored parameter(s) for each emission point.

(ii) The required information shall include the rationale for the specific maximum or minimum level for each parameter for each emission point, including any data and calculations used to develop the level and a description of why the level indicates proper operation of the control device or control technology.

(iii) The required information shall include a definition of the affected source's operating day, as specified in § 63.1416(c)(2)(ii), for purposes of determining daily average values or batch cycle daily average values of monitored parameters. The required information shall include a definition of the affected source's block(s), as specified in § 63.1416(c)(2)(ii), for purposes of determining block average values of monitored parameters.

(iv) For batch process vents, the required information shall include a definition of each batch cycle that requires the control of one or more batch emission episodes during the cycle, as specified in §§ 63.1413(e)(1)(iii) and 63.1416(c)(2)(ii).

(3) When the determination of applicability for process units, as made following the procedures in § 63.1400(g), indicates that a process unit is an APPU, an identification of the APPU and a statement indicating that the APPU is an APPU that produces more than one intended product at the same time, as specified in § 63.1400(g)(1), or is a flexible operations process unit as specified in § 63.1400(g)(2) through (4).

(4) [Reserved]

(5) The results for each predominant use determination for storage vessels belonging to an affected source subject to this subpart that is made under § 63.1400(h)(6).

(6) Notification that the owner or operator has elected to comply with § 63.1416(h), Reduced Recordkeeping Program.

(7) Notification that an affected source is exempt from the equipment leak provisions of § 63.1410 according to the provisions of § 63.1400(f), and the affected source's actual annual production of amino/phenolic resins for the 12-month period preceding December 14, 1998.

(8) An owner or operator with a combustion device, recovery device, or recapture device affected by the situation described in § 63.1400(i)(5) shall identify which rule shall be complied with for monitoring, recordkeeping, and reporting requirements, as allowed under § 63.1400(i)(5).

(9) Data or other information used to demonstrate that an owner or operator may use engineering assessment to estimate emissions for a batch emission episode, as specified in § 63.1413(d)(6)(iii)(A).

(f) *Periodic Reports.* For existing and new affected sources, each owner or operator shall submit Periodic Reports as specified in paragraph (f)(1) of this section. In addition, for equipment leaks subject to § 63.1410, the owner or operator shall submit the information specified in 40 CFR part 63, subpart UU, and for heat exchange systems subject to § 63.1409, the owner or operator shall submit the information specified in § 63.1409. Section 63.1415 shall govern the use of monitoring data to determine compliance for emissions points required to apply controls by the provisions of this subpart.

(1) Except as specified in paragraph (f)(12) of this section, a report containing the information in paragraph (f)(2) of this section or containing the information in paragraphs (f)(3) through (11) of this section, as appropriate, shall be submitted semiannually no later than 60 days after the end of each 180 day period. The first report shall be submitted no later than 240 days after the date the Notification of Compliance Status is due and shall cover the 6-month period beginning on the date the Notification of Compliance Status is due. Subsequent reports shall cover each preceding 6-month period.

(2) If none of the compliance exceptions specified in paragraphs (f)(3) through (11) of this section occurred during the 6-month period, the Periodic Report required by paragraph (f)(1) of this section shall be a statement that the affected source was in compliance for the preceding 6-month period and no activities specified in paragraphs (f)(3) through (11) of this section occurred during the preceding 6-month period.

(3) For an owner or operator of an affected source complying with the provisions of §§ 63.1404 through 63.1409 for any emission point, Periodic Reports shall include:

(i) All information specified in 40 CFR part 63, subpart WW and subpart SS for storage vessels; 40 CFR part 63, subpart SS for continuous process vents; § 63.1416(d)(3)(ii) for batch process vents; and § 63.1416(e) for aggregate batch vent stream.

(ii) The daily average values, batch cycle daily average values, or block average values of monitored parameters for deviations, as specified in § 63.1413(h), of operating parameters. In addition, the periods and duration of periods when monitoring data were not collected shall be specified.

(4) Notification if one or more emission point(s) or one or more APPU is added to an affected source. The owner or operator shall submit the following information:

(i) A description of the addition to the affected source;

(ii) Notification of applicability status (i.e., does the emission point require control) of the additional emission point, if appropriate, or notification of all emission points in the added APPU.

(5) If there is a deviation from the mass emission limit specified in § 63.1406(a)(1)(iii) or (a)(2)(iii), § 63.1407(b)(2), or § 63.1408(b)(2), the following information, as appropriate, shall be included:

(i) The cumulative average monthly emission rate or the 12-month rolling average monthly emission rate, as appropriate.

(ii) The individual monthly emission rate data points making up the cumulative average monthly emission rate or the 12-month rolling average monthly emission rate, as appropriate.

(iii) If an owner or operator is demonstrating compliance using the procedures in § 63.1413(e)(2)(ii), the monthly value of the site-specific emission limit.

(6) If any performance tests are reported in a Periodic Report, the following information shall be included:

(i) One complete test report shall be submitted for each test method used for a particular kind of emission point tested. A complete test report shall contain the information specified in paragraph (e)(1)(ii) of this section.

(ii) For additional tests performed for the same kind of emission point using the same method, results and any other information required shall be submitted, but a complete test report is not required.

(7) The Periodic Report shall include the results for each change made to a primary product determination for amino/phenolic resins made under § 63.1400(g).

(8) The Periodic Report shall include the results for each change made to a predominant use determination for a storage vessel belonging to an affected source subject to this subpart that is made under § 63.1400(h)(6).

(9) If an owner or operator invokes the delay of repair provisions for a heat exchange system, the following information shall be submitted, as appropriate. If the leak remains unrepaired, the information shall also be submitted in each subsequent periodic report until repair of the leak is reported.

(i) The presence of the leak and the date that the leak was detected.

(ii) Whether or not the leak has been repaired. If the leak is repaired, the date the leak was successfully repaired. If the leak remains unrepaired, the expected date of repair.

(iii) The reason(s) for delay of repair. If delay of repair is invoked due to the reasons described in § 63.1409(e)(2), documentation of emissions estimates shall be included.

(10) Notification that the owner or operator has elected to comply with § 63.1416(h), Reduced Recordkeeping Program.

(11) Notification that the owner or operator has elected to not retain the daily average, batch cycle daily average, or block average values, as appropriate, as specified in § 63.1416(h)(2)(i).

(12) The owner or operator of an affected source shall submit quarterly reports for particular emission points as specified in paragraphs (f)(12)(i) through (iv) of this section.

(i) The owner or operator of an affected source shall submit quarterly reports for a period of 1 year for an emission point if the Administrator requests the owner or operator to submit quarterly reports for the emission point.

(ii) The quarterly reports shall include all information specified in paragraphs (f)(3) through (11) of this section applicable to the emission point for which quarterly reporting is required under paragraph (f)(12)(i) of this section. Information applicable to other emission points within the affected source shall be submitted in the semiannual reports required under paragraph (f)(1) of this section.

(iii) Quarterly reports shall be submitted no later than 60 days after the end of each quarter.

(iv) After quarterly reports have been submitted for an emission point for 1 year, the owner or operator may return to semiannual reporting for the emission point unless the Administrator requests the owner or operator to continue to submit quarterly reports.

(g) *Start-up, shutdown, and malfunction reports.* For the purposes of this subpart, the semiannual start-up, shutdown, and malfunction reports shall be submitted on the same schedule as the Periodic Reports required under paragraph (f) of this section instead of being submitted on the schedule specified in § 63.10(d)(5)(i). Said reports shall include the information specified in § 63.1416(b)(1) and (2) and shall contain the name, title, and signature of the owner or operator or other responsible official who is certifying its accuracy.

(h) *Other reports.* Other reports shall be submitted as specified in paragraphs (h)(1) through (7) of this section.

(1) For storage vessels, the notifications of inspections required by 40 CFR part 63, subpart WW shall be submitted.

(2) A site-specific test plan shall be submitted no later than 90 days before the planned date for a performance test. Unless the Administrator requests changes to the site-specific test plan within 45 days after its receipt, the site-specific test plan shall be deemed approved. The test plan shall include a description of the planned test and rationale for why the planned performance test will provide adequate and representative results for demonstrating the performance of the control device. If required by § 63.1413(e)(1) or § 63.1414(d)(5), the test plan shall include an emission profile and rationale for why the selected test period is representative.

(3) The owner or operator shall notify the Administrator of the intention to conduct a performance test at least 30 days before the performance test is scheduled in order to allow the Administrator the opportunity to have an observer present during the test. If after 30 days notice for an initially scheduled performance test, there is delay (due to operational problems, etc.) in conducting the scheduled performance test, the owner or operator of an affected source shall notify the Administrator as soon as possible of any delay in the original test date, either by providing at least 7 days prior notice of the rescheduled date of the performance test, or by arranging a rescheduled date with the Administrator by mutual agreement.

(4) When the conditions of § 63.1400(g)(7) or the conditions of § 63.1400(g)(8) are met, notification of changes to the primary product for an APPU or process unit shall be submitted. When a notification is made in response to a change in the primary product under § 63.1400(g)(7), rationale for why it is anticipated that no amino/phenolic resins will be produced in the process unit in the future shall be included.

(5) Owners or operators of APPU or emission points (other than equipment leak components subject to § 63.1410) that are added to the affected source under the provisions of § 63.1400(d)(2) or (3) or under the provisions of § 63.5(b)(6) shall submit reports as specified in paragraphs (h)(5)(i) through (ii) of this section.

(i) Reports shall include:

(A) A description of the process change or addition, as appropriate;

(B) The planned start-up date and the appropriate compliance date; and

(C) Identification of the emission points (except equipment leak components subject to § 63.1410) specified in paragraphs (h)(5)(i)(C)(*1*) through (*3*) of this section, as applicable.

(*1* All the emission points in an added APPU.

(*2*) All the emission points in an affected source that becomes a new affected source.

(*3*) All the added or created emission points resulting from a process change.

(ii) If the owner or operator wishes to request approval to use alternative monitoring parameters, alternative continuous monitoring or recordkeeping, alternative controls, engineering assessment to estimate organic HAP emissions from a batch emissions episode, or wishes to establish parameter monitoring levels according to the procedures contained in § 63.1413(a)(1)(ii) or (ii), a Precompliance Report shall be submitted no later than 180 days prior to the appropriate compliance date.

(6) The information specified in paragraphs (h)(6)(i) and (ii) of this section shall be submitted when a small control device becomes a large control device, as specified in § 63.1413(a)(1)(ii).

(i) Notification that a small control device has become a large control device and the site-specific test plan shall be submitted within 60 days of the date the small control device becomes a large control device. The site-specific test plan shall include the information specified in paragraph (h)(2) of this section. Approval of the site-specific test plan shall follow paragraph (h)(2) of this section.

(ii) Results of the performance test required by § 63.1413(a)(1)(ii) shall be submitted within 150 days of the date the small control device becomes a large control device.

(7) Whenever a continuous process vent becomes subject to control requirements under 40 CFR part 63, subpart SS, as a result of a process change, the owner or operator shall submit a report within 60 days after the performance test or applicability assessment, whichever is sooner. The report may be submitted as part of the next Periodic Report required by paragraph (f) of this section.

(i) The report shall include the following information:

(A) A description of the process change;

(B) The results of the recalculation of the organic HAP concentration, volumetric flow rate, and or TRE index value required under § 63.1412 and recorded under § 63.1416(f).

(C) A statement that the owner or operator will comply with the requirements specified in § 63.1405.

(ii) If a performance test is required as a result of a process change, the owner or operator shall specify that the performance test has become necessary due to a process change. This specification shall be made in the performance test notification to the Administrator, as specified in paragraph (h)(3) of this section.

(iii) If a process change does not result in additional applicable requirements, then the owner or operator shall include a statement documenting this in the next Periodic Report required by paragraph (f) of this section.

(i) *Operating permit application.* An owner or operator who submits an operating permit application instead of a Precompliance Report shall submit the information specified in paragraph (d) of this section, Precompliance Report, as applicable.

(j) *Alternative monitoring parameters.* The owner or operator who has been directed by any section of this subpart or any section of another subpart referenced by this subpart that expressly referenced this paragraph (j) to set unique monitoring parameters, or who requests approval to monitor a different parameter than those specified in § 63.1415(b), shall submit the information specified in paragraphs (j)(1) through (3) of this section in the Precompliance Report, as required by paragraph (d) of this section.

(1) The required information shall include a description of the parameter(s) to be monitored to ensure the recovery

device, control device, or control technology is operated in conformance with its design and achieves the specified emission limit or percent reduction and an explanation of the criteria used to select the parameter(s).

(2) The required information shall include a description of the methods and procedures that will be used to demonstrate that the parameter indicates proper operation, the schedule for this demonstration, and a statement that the owner or operator will establish a level for the monitored parameter as part of the Notification of Compliance Status report required in paragraph (e) of this section, unless this information has already been included in the operating permit application.

(3) The required information shall include a description of the proposed monitoring, recordkeeping, and reporting system to include the frequency and content of monitoring, recordkeeping, and reporting. Further, the rationale for the proposed monitoring, recordkeeping, and reporting system shall be included if either condition in paragraph (j)(3)(i) or (ii) of this section is met:

(i) If monitoring and recordkeeping is not continuous; or

(ii) If reports of daily average values will not be included in Periodic Reports when the monitored parameter value is above the maximum level or below the minimum level as established in the operating permit or the Notification of Compliance Status.

(k) *Alternative continuous monitoring.* An owner or operator choosing not to implement the monitoring provisions specified in § 63.1415 for storage vessels, continuous process vents, batch process vents, or aggregate batch vent streams may instead request approval to use alternative continuous monitoring provisions according to the procedures specified in paragraphs (k)(1) through (4) of this section. Requests shall be submitted in the Precompliance Report as specified in paragraph (d)(4) of this section if not already included in the operating permit application and shall contain the information specified in paragraphs (k)(2)(i) and (ii) of this section, as applicable.

(1) The provisions in § 63.8(f)(5)(i) shall govern the review and approval of requests.

(2) An owner or operator of an affected source that does not have an automated monitoring and recording system capable of measuring parameter values at least once every 15 minutes and that does not generate continuous records may request approval to use a nonautomated system with less frequent monitoring in accordance with paragraphs (k)(2)(i) and (ii) of this section.

(i) The requested system shall include manual reading and recording of the value of the relevant operating parameter no less frequently than once per hour. Daily average (or batch cycle daily average) values shall be calculated from these hourly values and recorded.

(ii) The request shall contain:

(A) A description of the planned monitoring and recordkeeping system;

(B) Documentation that the affected source does not have an automated monitoring and recording system;

(C) Justification for requesting an alternative monitoring and recordkeeping system; and

(D) Demonstration to the Administrator's satisfaction that the proposed monitoring frequency is sufficient to represent control or recovery device operating conditions, considering typical variability of the specific process and control or recovery device operating parameter being monitored.

(3) An owner or operator may request approval to use an automated data compression recording system that does not record monitored operating parameter values at a set frequency (for example, once every 15 minutes) but records all values that meet set criteria for variation from previously recorded values, in accordance with paragraphs (k)(3)(i) and (ii) of this section.

(i) The requested system shall be designed to:

(A) Measure the operating parameter value at least once every 15 minutes;

(B) Except for the monitoring of batch process vents, calculate hourly average values each hour during periods of operation;

(C) Record the date and time when monitors are turned off or on;

(D) Recognize unchanging data that may indicate the monitor is not functioning properly, alert the operator, and record the incident;

(E) Calculate daily average, batch cycle daily average, or block average values of the monitored operating parameter based on all measured data; and

(F) If the daily average is not a deviation, as defined in § 63.1413(h), from the operating parameter, the data for that operating day may be converted to hourly average values, and the four or more individual records for each hour in the operating day may be discarded.

(ii) The request shall contain:

(A) A description of the monitoring system and data compression recording system, including the criteria used to determine which monitored values are recorded and retained;

(B) The method for calculating daily averages and batch cycle daily averages; and

(C) A demonstration that the system meets all criteria in paragraph (k)(3)(i) of this section.

(4) An owner or operator may request approval to use other alternative monitoring systems according to the procedures specified in § 63.8(f)(4).

§ 63.1418 [Reserved]

§ 63.1419 Delegation of authority.

(a) This regulation can be administered by the US EPA, or a delegated authority such as a State, local, or tribal agency. If the US EPA Administrator has delegated this regulation to a State, local, or tribal agency, then that agency has the authority to administer and enforce this regulation. To find out if this regulation is delegated to a State, local, or tribal agency, contact the appropriate EPA Regional Office.

(b) In delegating implementation and enforcement authority of this regulation to a State, local, or tribal agency under section 40 CFR part 63, subpart E, the authorities contained in paragraph (c) of this section are retained by the Administrator of US EPA and are not transferred to the State, local, or tribal agency.

(c) The authorities that will not be delegated to State, local, or tribal agencies are as follows.

(1) Approval of alternatives to the non-opacity emission standards in § 63.1403 through § 63.1410; § 63.1022 through § 63.1034, § 63.1062, § 63.1063(a) and (b), and § 63.1064 under § 63.6(h)(9).

(2) Approval of major alternatives to test methods under § 63.997 and § 63.1414 as defined in § 63.90.

(3) Approval of major alternatives to monitoring under § 63.996 and § 63.1415 as defined in § 63.90.

(4) Approval of major alternatives to recordkeeping and reporting under § 63.998, § 63.999, § 63.1038, § 63.1039, § 63.1065, § 63.1066, § 63.1416, and § 63.1417 as defined in § 63.90 of this chapter.

TABLE 1 TO SUBPART OOO OF PART 63—APPLICABILITY OF GENERAL PROVISIONS TO SUBPART OOO AFFECTED SOURCES

Reference	Applies to subpart OOO	Explanation
63.1(a)(1)	Yes	§63.1402 specifies definitions in addition to or that supersede definitions in §63.2.
63.1(a)(2)	Yes.	
63.1(a)(3)	Yes	§63.1401(i) identifies those standards which overlap with the requirements of subpart OOO of this part and specify how compliance shall be achieved.
63.1(a)(4)	Yes	Subpart OOO (this table) specifies the applicability of each paragraph in subpart A of this part.
63.1(a)(5)	No	[Reserved].
63.1(a)(6)–63.1(a)(8)	Yes..	
63.1(a)(9)	No	[Reserved].
63.1(a)(10)	Yes.	
63.1(a)(11)	Yes.	
63.1(a)(12)–63.1(a)(14)	Yes.	
63.1(b)(1)	No.	
63.1(b)(2)	Yes.	
63.1(b)(3)	No	§63.1400(e) provides documentation requirements for APPUs not considered affected sources.
63.1(c)(1)	Yes	Subpart OOO (this table) specifies the applicability of each paragraph in subpart A of this part.
63.1(c)(2)	No	Area sources are not subject to this subpart.
63.1(c)(3)	No	[Reserved].
63.1(c)(4)	Yes.	
63.1(c)(5)	Yes	Except that affected sources are not required to submit notifications overridden by this table.
63.1(d)	No	[Reserved].
63.1(e)	Yes.	
63.2	Yes	§63.1402 specifies the definitions from subpart A of this part that apply to this subpart.
63.3	Yes.	
63.4(a)(1)–63.4(a)(3)	Yes.	
63.4(a)(4)	No	[Reserved].
63.4(a)(5)	Yes.	
63.4(b)	Yes.	
63.4(c)	Yes.	
63.5(a)(1)	Yes	Except the terms "source" and "stationary source" should be interpreted as having the same meaning as "affected source."
63.5(a)(2)	Yes.	
63.5(b)(1)	Yes	Except §63.1400(d) specifies when construction or reconstruction is subject to new source standards.
63.5(b)(2)	No	[Reserved].
63.5(b)(3)	Yes.	
63.5(b)(4)	Yes	Except that the Initial Notification and §63.9(b) requirements do not apply.
63.5(b)(5)	Yes.	
63.5(b)(6)	Yes	Except that §63.1400(d) specifies when construction or reconstruction is subject to new source standards.
63.5(c)	No	[Reserved].
63.5(d)(1)(i)	Yes	Except that the references to the Initial Notification and §63.9(b)(5) do not apply.
63.5(d)(1)(ii)	Yes	Except that §63.5(d)(1)(ii)(H) does not apply.
63.5(d)(1)(iii)	No	§63.1417(e) specifies Notification of Compliance Status requirements.
63.5(d)(2)	No.	
63.5(d)(3)	Yes	Except §63.5(d)(3)(ii) does not apply, and equipment leaks subject to §63.1410 are exempt.
63.5(d)(4)	Yes.	
63.5(e)	Yes.	
63.5(f)(1)	Yes.	
63.5(f)(2)	Yes	Except that where §63.9(b)(2) is referred to, the owner or operator need not comply.
63.6(a)	Yes.	
63.6(b)(1)	Yes.	
63.6(b)(2)	Yes.	
63.6(b)(3)	Yes.	
63.6(b)(4)	Yes.	
63.6(b)(5)	Yes.	
63.6(b)(6)	No	[Reserved].
63.6(b)(7)	No.	
63.6(c)(1)	Yes	Except that §63.1401 specifies the compliance date.
63.6(c)(2)	No.	
63.6(c)(3)	No	[Reserved].
63.6(c)(4)	No	[Reserved].

TABLE 1 TO SUBPART OOO OF PART 63—APPLICABILITY OF GENERAL PROVISIONS TO SUBPART OOO AFFECTED SOURCES—Continued

Reference	Applies to subpart OOO	Explanation
63.6(c)(5)	Yes.	
63.6(d)	No	[Reserved].
63.6(e)	Yes	Except as otherwise specified in this table, § 63.6(e) does not apply to emission points that do not require control under this subpart.[a]
63.6(e)(1)(i)	No	This is addressed by § 63.1400(k)(4).
63.6(e)(1)(ii)	Yes.	
63.6(e)(1)(iii)	Yes.	
63.6(e)(2)	Yes.	
63.6(e)(3)(i)	Yes	For equipment leaks (subject to § 63.1410), the start-up, shutdown, and malfunction plan requirement of § 63.6(e)(3)(i) is limited to control devices and is optional for other equipment. The start-up, shutdown, malfunction plan may include written procedures that identify conditions that justify a delay of repair.
63.6(e)(3)(i)(A)	No	This is addressed by § 63.1400(k)(4).
63.6(e)(3)(i)(B)	Yes.	
63.6(e)(3)(i)(C)	Yes.	
63.6(e)(3)(ii)	Yes.	
63.6(e)(3)(iii)	No	Recordkeeping and reporting are specified in §§ 63.1416 and 63.1417.
63.6(e)(3)(iv)	No	Recordkeeping and reporting are specified in §§ 63.1416 and 63.1417.
63.6(e)(3)(v)	Yes.	
63.6(e)(3)(vi)	Yes.	
63.6(e)(3)(vii)	Yes.	
63.6(e)(3)(vii) (A)	Yes.	
63.6(e)(3)(vii) (B)	Yes	Except the plan shall provide for operation in compliance with § 63.1400(k)(4).
63.6(e)(3)(vii) (C)	Yes.	
63.6(e)(3)(viii)	Yes.	
63.6(f)(1)	Yes.	
63.6(f)(2)	Yes	Except § 63.7(c), as referred to in § 63.6(f)(2)(iii)(D), does not apply, and except that § 63.6(f)(2)(ii) does not apply to equipment leaks subject to § 63.1410.
63.6(f)(3)	Yes.	
63.6(g)	Yes.	
63.6(h)	No	This subpart OOO does not require opacity and visible emission standards.
63.6(i)(1)	Yes.	
63.6(i)(2)	Yes.	
63.6(i)(3)	Yes.	
63.6(i)(4)(i)(A)	Yes.	
63.6(i)(4)(i)(B)	No	Dates are specified in §§ 63.1401(e) and 63.1417(d)(1).
63.6(i)(4)(ii)	No.	
63.6(i)(5)–(14)	Yes.	
63.6(i)(15)	No	[Reserved].
63.6(i)(16)	Yes.	
63.6(j)	Yes.	
63.7(a)(1)	Yes.	
63.7(a)(2)	No	§ 63.1417(e) specifies the submittal dates of performance test results for all emission points except equipment leaks; for equipment leaks, compliance demonstration results are reported in the Periodic Reports.
63.7(a)(3)	Yes.	
63.7(b)	No	§ 63.1417 specifies notification requirements.
63.7(c)	No.	
63.7(d)	Yes.	
63.7(e)(1)	Yes	Except that all performance tests shall be conducted at maximum representative operating conditions achievable at the time without disruption of operations or damage to equipment.
63.7(e)(2)	Yes.	
63.7(e)(3)	No	Subpart OOO specifies requirements.
63.7(e)(4)	Yes.	
63.7(f)	Yes	Except that if a site specific test plan is not required, the notification deadline in § 63.7(f)(2)(i) shall be 60 days prior to the performance test, and in § 63.7(f)(3), approval or disapproval of the alternative test method shall not be tied to the site specific test plan.
63.7(g)	Yes	Except that the requirements in § 63.1417(e) shall apply instead of the references to the Notification of Compliance Status report in § 63.9(h). In addition, equipment leaks subject to § 63.1410 are not required to conduct performance tests.
63.7(h)	Yes	Except § 63.7(h)(4)(ii) may not be applicable, if the site-specific test plan in § 63.7(c)(2) is not required.
63.8(a)(1)	Yes.	
63.8(a)(2)	No.	

TABLE 1 TO SUBPART OOO OF PART 63—APPLICABILITY OF GENERAL PROVISIONS TO SUBPART OOO AFFECTED SOURCES—Continued

Reference	Applies to subpart OOO	Explanation
63.8(a)(3)	No	[Reserved].
63.8(a)(4)	Yes.	
63.8(b)(1)	Yes.	
63.8(b)(2)	No	Subpart OOO specifies locations to conduct monitoring.
63.8(b)(3)	Yes.	
63.8(c)(1)	Yes.	
63.8(c)(1)(i)	Yes.	
63.8(c)(1)(ii)	No	For all emission points except equipment leaks, comply with §63.1416(b)(2); for equipment leaks, comply with requirements in 40 CFR part 63, subpart UU.
63.8(c)(1)(iii)	Yes.	
63.8(c)(2)	Yes.	
63.8(c)(3)	Yes.	
63.8(c)(4)	No	§63.1415 specifies monitoring frequency; not applicable to equipment leaks because §63.1410 does not require continuous monitoring systems.
63.8(c)(5)–63.8(c)(8)	No.	
63.8(d)	No.	
63.8(e)	No.	
63.8(f)(1)–63.8(f)(3)	Yes.	
63.8(f)(4)(i)	No	Timeframe for submitting request is specified in §63.1417 (j) or (k); not applicable to equipment leaks because §63.1410 (through reference to 40 CFR part 63, subpart UU) specifies acceptable alternative methods.
63.8(f)(4)(ii)	No	Contents of request are specified in §63.1417(j) or (k).
63.8(f)(4)(iii)	No.	
63.8(f)(5)(i)	Yes.	
63.8(f)(5)(ii)	No.	
63.8(f)(5)(iii)	Yes.	
63.8(f)(6)	No	Subpart OOO does not require continuous emission monitors.
63.8(g)	No	Data reduction procedures specified in §63.1416(a) and (h); not applicable to equipment leaks.
63.9(a)	Yes.	
63.9(b)	No	Subpart OOO does not require an initial notification.
63.9(c)	Yes.	
63.9(d)	Yes.	
63.9(e)	No	§63.1417 specifies notification deadlines.
63.9(f)	No	Subpart OOO does not require opacity and visible emission standards.
63.9(g)	No.	
63.9(h)	No	§63.1417(e) specifies Notification of Compliance Status requirements.
63.9(i)	Yes.	
63.9(j)	No.	
63.10(a)	Yes.	
63.10(b)(1)	No	§63.1416(a) specifies record retention requirements.
63.10(b)(2)	No	Subpart OOO specifies recordkeeping requirements.
63.10(b)(3)	No	§63.1400(e) requires documentation of sources that are not affected sources.
63.10(c)	No	§63.1416 specifies recordkeeping requirements.
63.10(d)(1)	Yes.	
63.10(d)(2)	No	§63.1417 specifies performance test reporting requirements; not applicable to equipment leaks.
63.10(d)(3)	No	Subpart OOO does not require opacity and visible emission standards.
63.10(d)(4)	Yes.	
63.10(d)(5)	Yes	Except that reports required by §63.10(d)(5)(i) may be submitted at the same time as Periodic Reports specified in §63.1417(f). The start-up, shutdown, and malfunction plan, and any records or reports of start-up, shutdown, and malfunction do not apply to emission points that do not require control under this subpart.
63.10(e)	No	§63.1417 specifies reporting requirements.
63.10(f)	Yes.	
63.11	Yes	Except that instead of §63.11(b), §63.1413(g) shall apply.
63.12	Yes.	
63.13–63.15	Yes.	

[a] The plan and any records or reports of start-up, shutdown, and malfunction do not apply to emission points that do not require control under this subpart.

TABLE 2 TO SUBPART OOO OF PART 63—KNOWN ORGANIC HAZARDOUS AIR POLLUTANTS (HAP) FROM THE MANUFACTURE OF AMINO/PHENOLIC RESINS

Organic HAP	CAS Number	Organic HAP subject to cooling tower monitoring requirements in § 63.1409 (Yes/No)	
		Column A	Column B
Acrylamide	79–06–1	No	No
Aniline	62–53–3	Yes	No
Biphenyl	92–52–4	Yes	Yes
Cresol and cresylic acid (mixed)	1319–77–3	Yes	No
Cresol and cresylic acid (m-)	108–39–4	Yes	No
Cresol and cresylic acid (o-)	95–48–7	Yes	No
Cresol and cresylic acid (p-)	106–44–5	Yes	No
Diethanolamine	111–42–2	No	No
Dimethylformamide	68–12–2	No	No
Ethylbenzene	100–41–4	Yes	Yes
Ethylene glycol	107–21–1	No	No
Formaldehyde	50–00–0	Yes	No
Glycol ethers	0	No	No
Methanol	67–56–1	Yes	Yes
Methyl ethyl ketone	78–93–3	Yes	Yes
Methyl isobutyl ketone	108–10–1	Yes	Yes
Naphthalene	91–20–3	Yes	Yes
Phenol	108–95–2	Yes	No
Styrene	100–42–5	Yes	Yes
Toluene	108–88–3	No	Yes
Xylenes (NOS)	1330–20–7	Yes	Yes
Xylene (m-)	108–38–3	Yes	Yes
Xylene (o-)	95–47–6	Yes	Yes
Xylene (p-)	106–42–3	Yes	Yes

CAS No. = Chemical Abstract Registry Number.

TABLE 3 TO SUBPART OOO OF PART 63—BATCH PROCESS VENT MONITORING REQUIREMENTS

Control device	Parameters to be monitored	Frequency/recordkeeping requirements
Scrubber[a]	pH of scrubber effluent, and	Continuous records as specified in § 63.1416(d).[b]
	Scrubber liquid and gas flow rates	Continuous records as specified in § 63.1416(d).[b]
Absorber[a]	Exit temperature of the absorbing liquid, and	Continuous records as specified in § 63.1416(d).[b]
	Exit specific gravity for the absorbing liquid	Continuous records as specified in § 63.1416(d).[b]
Condenser[a]	Exit (product side) temperature	Continuous records as specified in § 63.1416(d).[a]
Carbon adsorber[a]	Total regeneration steam flow or nitrogen flow, or pressure (gauge or absolute) during carbon bed regeneration cycle(s), and.	Record the total regeneration steam flow or nitrogen flow, or pressure for each carbon bed regeneration cycle.
	Temperature of the carbon bed after regeneration and within 15 minutes of completing any cooling cycle(s).	Record the temperature of the carbon bed after each regeneration and within 15 minutes of completing any cooling cycle(s).
Thermal incinerator	Firebox temperature[c]	Continuous records as specified in § 63.1416(d).[b]
Catalytic incinerator	Temperature upstream and downstream of the catalyst bed.	Continuous records as specified in § 63.1416(d).[b]
Boiler or process heater with a design heat input capacity less than 44 megawatts and where the batch process vents or aggregate batch vent streams are not introduced with or used as the primary fuel.	Firebox temperature[c]	Continuous records as specified in § 63.1416(d).[b]
Flare	Presence of a flame at the pilot light	Hourly records of whether the monitor was continuously operating during batch emission episodes, or portions thereof, selected for control and whether a flame was continuously present at the pilot light during said periods.

TABLE 3 TO SUBPART OOO OF PART 63—BATCH PROCESS VENT MONITORING REQUIREMENTS—Continued

Control device	Parameters to be monitored	Frequency/recordkeeping requirements
All control devices	Diversion to the atmosphere from the control device or.	Hourly records of whether the flow indicator was operating during batch emission episodes, or portions thereof, selected for control and whether a diversion was detected at any time during said periods as specified in § 63.1416(d).
	Monthly inspections of sealed valves	Records that monthly inspections were performed as specified in § 63.1416(d).
Scrubber, absorber, condenser, and carbon adsorber (as an alternative to the requirements previously presented in this table).	Concentration level or reading indicated by an organic monitoring device at the outlet of the control device.	Continuous records as specified in § 63.1416(d).[b]

[a] Alternatively, these devices may comply with the organic monitoring device provisions listed at the end of this table.
[b] "Continuous records" is defined in § 63.111.
[c] Monitor may be installed in the firebox or in the ductwork immediately downstream of the firebox before any substantial heat exchange is encountered.

TABLE 4 TO SUBPART OOO OF PART 63—OPERATING PARAMETER LEVELS

Device	Parameters to be monitored	Established operating parameter(s)
Scrubber	pH of scrubber effluent; and scrubber liquid and gas flow rates.	Minimum pH; and minimum liquid/gas ratio.
Absorber	Exit temperature of the absorbing liquid; and exit specific gravity of the absorbing liquid.	Maximum temperature; and maximum specific gravity.
Condenser	Exit temperature	Maximum temperature.
Carbon absorber	Total regeneration steam or nitrogen flow, or pressure (gauge or absolute)[a] during carbon bed regeneration cycle; and temperature of the carbon bed after regeneration (and within 15 minutes of completing any cooling cycle(s)).	Maximum flow or pressure; and maximum temperature.
Thermal incinerator	Firebox temperature	Minimum temperature.
Catalytic incinerator	Temperature upstream and downstream of the catalyst bed.	Minimum upstream temperature; and minimum temperature difference across the catalyst bed.
Boiler or process heater	Firebox temperature	Minimum temperature.
Other devices (or as an alternate to the requirements previously presented in this table)[b].	Organic HAP concentration level or reading at outlet of device.	Maximum organic HAP concentration or reading.

[a] 25 to 50 mm (absolute) is a common pressure level obtained by pressure swing absorbers.
[b] Concentration is measured instead of an operating parameter.

TABLE 5 TO SUBPART OOO OF PART 63—REPORTS REQUIRED BY THIS SUBPART

Reference	Description of report	Due date
§ 63.1400(j) and Subpart A of this part.	Refer to Table 1 and Subpart A of this part.	Refer to Subpart A of this part.
63.1417(d)	Precompliance Report	Existing affected sources—12 months prior to the compliance date. New affected sources—with application for approval of construction or reconstruction.
63.1417(e)	Notification of Compliance Status	Within 150 days after the compliance date.
63.1417(f)	Periodic Reports	Semiannually, no later than 60 days after the end of each 6-month period. See § 63.1417(f)(1) for the due date for the first report.
63.1417(f)(12)	Quarterly reports upon request of the administrator.	No later than 60 days after the end of each quarter.
63.1417(g)	Start-up, shutdown, and malfunction reports.	Semiannually (same schedule as Periodic reports).
63.1417(h)(1)	Notification of storage vessel inspection.	As specified in 40 CFR part 63, subpart WW.
63.1417(h)(2)	Site-specific test plan	90 days prior to planned date of test.
63.1417(h)(3)	Notification of planned performance test.	30 days prior to planned date of test.
63.1417(h)(4)	Notification of change in primary product.	As specified in § 63.1400 (g)(7) or (g)(8).
63.1417(h)(5)	Notification of added emission points.	180 days prior to the appropriate compliance date.

TABLE 5 TO SUBPART OOO OF PART 63—REPORTS REQUIRED BY THIS SUBPART—Continued

Reference	Description of report	Due date
63.1417(h)(6)	Notification that a small control device has been redesignated as a large control device.	Within 60 days of the redesignation of control device size.
63.1417(h)(7)	Notification of process change	Within 60 days after performance test or applicability assessment, whichever is sooner.

[a] Note that the APPU remains subject to this subpart until the notification under § 63.1400(g)(7) is made.

TABLE 6 to Subpart OOO of Part 63—Coefficients for Total Resource Effectiveness [a]

Control device basis	Values of coefficients		
	A	B	C
Flare	5.276×10^{-1}	9.98×10^{-2}	2.096×10^{-3}
Thermal Incinerator 0 Percent Recovery	4.068×10^{-1}	1.71×10^{-2}	8.664×10^{-3}
Thermal Incinerator 70 Percent Recovery	6.868×10^{-1}	3.21×10^{-3}	3.546×10^{-3}

[a] Use according to procedures outlined in this section.
MJ/scm = MegaJoules per standard cubic meter.
scm/min = Standard cubic meters per minute.

[FR Doc. 00–1 Filed 1–19–00; 8:45 am]
BILLING CODE 6560–50–P

Corrections

Federal Register
Vol. 65, No. 33
Tuesday, February 22, 2000

This section of the FEDERAL REGISTER contains editorial corrections of previously published Presidential, Rule, Proposed Rule, and Notice documents. These corrections are prepared by the Office of the Federal Register. Agency prepared corrections are issued as signed documents and appear in the appropriate document categories elsewhere in the issue.

DEPARTMENT OF ENERGY

Federal Energy Regulatory Commisson

[Docket No. ER99-4392-000]

Southwest Power Pool, Inc.; Notice of Settlement Conference

Correction

In notice document 00–1691 appearing on page 3953 in the issue of Tuesday, January 25, 2000, the docket number should read as set forth above.

[FR Doc. C0–1691 Filed 2–18–00; 8:45 am]

BILLING CODE 1505–01–D

ENVIRONMENTAL PROTECTION AGENCY

40 CFR Part 63

[FRL–6513–4]

RIN 2060–AE36

National Emission Standards for Hazardous Air Pollutants for Amino/Phenolic Resins Production

Correction

In rule document 00–1 beginning on page 3275 in the issue of January 20, 2000, make the following corrections:

1. On page 3279, in Table 1, in the first column, under the heading "Emission point", the phrase "OR alternative standard of venting to a control device continuously achieving a 50 ppmv outlet organic HAPS concentration or 20 ppmv outlet organic HAPS concentration for combustion devices." should be removed. The phrase is correctly located in the third column under the heading "Standard".

§63.1413 [Corrected]

2. On page 3308, in the first column, after line 6 of paragraph(e)(2)(i)(C) at the bottom of the column, insert the following equation:

$$ER = \frac{\sum_{i=1}^{n} E_i}{RP_M} \qquad \text{[Eq. 2]}$$

[FR Doc. C0–1 Filed 2–18–00; 8:45 am]

BILLING CODE 1505–01–D

FEDERAL TRADE COMMISSION

[File No. 992 3228]

DBC Financial, Inc., et al.; Analysis To Aid Public Comment

Correction

In notice document 00–3236 beginning on page 7017 in the issue of Friday, February 11, 2000, make the following corrections:

1. On page 7017, in the third column, six lines from the bottom, " **DATE:**" should read "**DATES:** Comments must be received on or before March 6, 2000."

2. On the same page, in the same column, the line beneath "**DATES**" should read "**ADDRESSSES:** Comments should be directed to FTC/Office of the Secretary, Room 159, 600 Pennsylvania Ave.,NW, Washington, D.C. 20580."

[FR Doc. C0–3236 Filed 2–18–00; 8:45 am]

BILLING CODE 1505–01–D

SECURITIES AND EXCHANGE COMMISSION

[Release No. 34–42325; File No. SR–NASD–99–60]

Self–Regulatory Organizations; Notice of Filing of Proposed Rule Change by the National Association of Securities Dealers Inc. Relating to Trading in Hot Equity Offerings

Correction

In notice document 00–995, beginning on page 2656, in the issue of Tuesday, January 18, 2000, make the following corrections:

1. On page 2656, in the third column, in the 18th line, "Withholding"[" should read "Withholding"]".

2. On the same page, in the same column, in paragraph (a)(2), in the last line, "The receipt of a management or performance based fee for operating a collective investment account shall not be considered a beneficial interest in the account" should be added after "interest.".

3. On page 2657, in the second column, in paragraph (b)(1), in the seventh line, "expect" should read "except".

4. On the same page, in the third column, in the first paragraph under paragraph "(e) General Exemptions", in the second line, "with a member" should be removed.

5. On page 2658, in the first column, in the fourth line, "this" should read "the".

6. On the same page, in the same column, in paragraph (f)(2), in the second line, "not" should be added after "shall".

7. On the same page, in the second column, in paragraph (e)(1), in the fifth line "through" should read "though".

8. On the same page, in the same column, in paragraph (d)(1), in the first line, "2520" should be added after "2450".

9. On the same page, in the same column, in paragraph (a), in the second line, "Rules" should read "Rule".

[FR Doc. C0–995 Filed 2–18–00; 8:45 am]

BILLING CODE 1505–01–D

ENVIRONMENTAL PROTECTION AGENCY

40 CFR Part 63

[FRL–6513–8]

RIN 2060–AE77

National Emission Standards for Hazardous Air Pollutants for Secondary Aluminum Production

AGENCY: Environmental Protection Agency (EPA).

ACTION: Final rule.

SUMMARY: This action promulgates national emission standards for hazardous air pollutants (NESHAP) for new and existing sources at secondary aluminum production facilities. Hazardous air pollutants (HAPs) emitted by the facilities that would be regulated by this final rule include organic HAPs, inorganic gaseous HAPs (hydrogen chloride, hydrogen fluoride, and chlorine), and particulate HAP metals. Some of these pollutants, including 2,3,7,8-tetrachlorodibenzo-p-dioxin, are known or suspected carcinogens and all can cause toxic effects in humans following sufficient exposure. Emissions of other pollutants include particulate matter and volatile organic compounds.

These standards implement section 112(d) of the Clean Air Act (CAA) and are based on the Administrator's determination that secondary aluminum production facilities are major sources of HAP emissions and emit several of the HAPs listed in section 112(b) of the CAA from the various process operations found within the industry. The final rule will provide protection to the public health by requiring secondary aluminum production facilities to meet emission standards reflecting application of the maximum achievable control technology (MACT). Secondary aluminum production facilities that are area sources would be subject to limitations on emissions of dioxins and furans (D/F) only. Implementation of this rule will reduce emissions of all identified pollutants by about 14,200 megagrams per year (Mg/yr) (15,600 tons per year (tpy)) and HAP emissions would be reduced by about 11,300 Mg/yr (12,400 tpy).

EFFECTIVE DATE: This regulation is effective March 23, 2000. The incorporation by reference of certain publications listed in the rule is approved by the Director of the Federal Register as of March 23, 2000.

ADDRESSES: Docket. Docket No. A–92–61, containing information considered by the EPA in development of the promulgated standards, is available for public inspection between 8 a.m. to 5:30 p.m., Monday through Friday, except Federal holidays, at the following address: U.S. Environmental Protection Agency, Air and Radiation Docket and Information Center (6102), 401 M Street SW, Washington, DC 20460, telephone: (202) 260–7548. The docket is located at the above address in room M–1500, Waterside Mall (ground floor). A reasonable fee may be charged for copying docket materials.

FOR FURTHER INFORMATION CONTACT: For further information concerning applicability and rule determinations, contact the appropriate State or local agency representative. If no State or local representative is available, contact the EPA Regional Office staff listed in the Supplementary Information section of this preamble. For information concerning the analyses performed in developing this rule, contact Mr. Juan Santiago, Minerals and Inorganic Chemicals Group, Emission Standards Division (MD–13), Office of Air Quality Planning and Standards, U.S. EPA, Research Triangle Park, North Carolina 27711, telephone number (919) 541–1084, facsimile number (919) 541–5600, electronic mail address "santiago.juan@epamail.epa.gov."

SUPPLEMENTARY INFORMATION:

Regulated Entities

Entities potentially regulated by this action are secondary aluminum production facilities using clean charge, post-consumer scrap, aluminum scrap, ingots, foundry returns, dross, or molten metal as the raw material, and performing one or more of the following processes: aluminum scrap shredding, scrap drying/delacquering/decoating, thermal chip drying, furnace operations (*i.e.*, melting, holding, refining, fluxing, or alloying), in-line fluxing, or dross cooling. The EPA identified an estimated 3,000 facilities potentially affected by the rule (including sweat furnaces, die casting facilities, and foundries) which include one or more of the designated affected sources, 86 of which are estimated to be major sources. Most establishments are included in NAICS 331314 (Secondary Smelting and Alloying of Aluminum), although others may fall in NAICS 331315 (Aluminum Sheet, Plate, and Foil Manufacturing), NAICS 331316 (Aluminum Extruded Product Manufacturing), NAICS 331319 (Other Aluminum Rolling and Drawing), NAICS 331521 (Aluminum Die-Castings), and NAICS 331524 (Aluminum Foundries). Affected sources at facilities that are major sources of HAPs are regulated under the final rule. In addition, emissions of dioxins and furans (D/F) from affected sources at facilities that are area sources of HAPs are also regulated.

The final rule does not apply to manufacturers of aluminum die castings, aluminum foundries, or aluminum extruders that melt no materials other than clean charge and materials generated within the facility and that also do not operate a thermal chip dryer, sweat furnace or scrap dryer/delacquering kiln/decoating kiln. Secondary aluminum production facilities that are collocated with primary aluminum production are regulated under today's final rule.

Regulated categories and entities include:

Category	NAICS code	SIC code	Examples of regulated entities
Industry	331314	3341	Secondary smelting and alloying of aluminum facilities.
			Secondary aluminum production facility affected sources that are collocated at:
	331312	3334	Primary aluminum production facilities.
	331315	3353	Aluminum sheet, plate, and foil manufacturing facilities.
	331316	3354	Aluminum extruded product manufacturing facilities.
	331319	3355	Other aluminum rolling and drawing facilities.
	331521	3363	Aluminum die casting facilities.
	331524	3365	Aluminum foundry facilities.

This table is not intended to be exhaustive, but rather provides a guide for readers regarding entities likely to be regulated by this action. This table lists the types of entities that the Agency is now aware could potentially be

regulated by this action. Other types of entities not listed in the table could also be regulated. To determine whether your facility is regulated by this action, you should carefully examine the applicability criteria in § 63.1500 of the rule. If you have questions regarding the applicability of this action to a particular entity, consult the appropriate EPA Regional Office representative:

Region I—Janet Bowen, Office of Ecosystem Protection, U.S. EPA, Region I, CAP, JFK Federal Building, Boston, MA 02203, (617) 565–3595.

Region II—Kenneth Eng, Air Compliance Branch Chief, U.S. EPA, Region II, 290 Broadway, New York, NY 10007–1866, (212) 637–4000.

Region III—Bernard Turlinski, Air Enforcement Branch Chief, U.S. EPA, Region III (3AT10), 841 Chestnut Building, Philadelphia, PA 19107, (215) 566–2110.

Region IV—Lee Page, Air Enforcement Branch, U.S. EPA, Region IV, Atlanta Federal Center, 61 Forsyth Street, Atlanta, GA 30303–3104, (404) 562–9131.

Region V—George T. Czerniak, Jr., Air Enforcement Branch Chief, U.S. EPA, Region V (5AE–26), 77 West Jackson Street, Chicago, IL 60604, (312) 353–2088.

Region VI—John R. Hepola, Air Enforcement Branch Chief, U.S. EPA, Region VI, 1445 Ross Avenue, Suite 1200, Dallas, TX 75202–2733, (214) 665–7220.

Region VII—Donald Toensing, Chief, Air Permitting and Compliance Branch, U.S. EPA, Region VII, 726 Minnesota Avenue, Kansas City, KS 66101, (913) 551–7446.

Region VIII—Douglas M. Skie, Air and Technical Operations Branch Chief, U.S. EPA, Region VIII, 999 18th Street, Suite 500, Denver, CO 80202–2466, (303) 312–6432.

Region IX—Barbara Gross, Air Compliance Branch Chief, U.S. EPA, Region IX, 75 Hawthorne Street, San Francisco, CA 94105, (415) 744–1138.

Region X—Dan Meyer, Air and Radiation Branch Chief, U.S. EPA, Region X (OAQ–107), 1200 Sixth Avenue, Seattle, WA 98101–1128, (206) 553–4150.

Judicial Review

The NESHAP for secondary aluminum production was proposed on February 11, 1999 (63 FR 6946). Today's **Federal Register** action announces the EPA's final decision on the rule. Under section 307(b)(1) of the CAA, judicial review of the NESHAP is available by filing a petition for review in the U.S. Court of Appeals for the District of Columbia Circuit within 60 days of today's publication of this final rule. Only those objections to this rule which were raised with reasonable specificity during the period for public comment may be raised during judicial review. Under section 307(b)(2) of the CAA, the requirements that are the subject of today's final rule may not be challenged later in civil or criminal proceedings brought by the EPA to enforce these requirements.

Technology Transfer Network (TTN)

In addition to being available in the docket, following promulgation, a copy of the rule will be posted at the TTN's policy and guidance page for newly proposed or promulgated rules (http://www.epa.gov/ttn/oarpg/t3pfpr.html). The TTN provides information from EPA in various areas of air pollution technology or policy. If more information on the TTN is needed, call the TTN help line at (919)541–5384.

Outline

The following outline is provided to aid in reading this preamble to the final rule.

I. Background and Public Participation
II. Summary of Final Rule
  A. Applicability and Definitions
  B. Emission Limits and Requirements
  C. Operating and Monitoring Requirements
  D. Reconsideration of Standard for Die Casters and Foundries
III. Summary of Responses to Major Comments
  A. Applicability
  B. Emission Standards and Operating Requirements
  C. Monitoring Requirements
  D. Impacts
IV. Summary of Changes Since Proposal
V. Summary of Impacts
  A. Air Quality Impacts
  B. Economic Impacts
  C. Non-Air Health and Environmental Impacts
  D. Energy Impacts
VI. Administrative Requirements
  A. Congressional Review Act
  B. Executive Order 12866—Regulatory Planning and Review
  C. Executive Order 13045—Protection of Children from Environmental Health Risks and Safety Risks
  D. Executive Order 13084—Consultation and Coordination with Indian Tribal Governments
  E. Executive Order 13132—Federalism
  F. Unfunded Mandates Reform Act
  G. Regulatory Flexibility Act
  H. Paperwork Reduction Act
  I. National Technology Transfer and Advancement Act

I. Background and Public Participation

The CAA (section 101(b)(1)) was created in part "to protect and enhance the quality of the Nation's air resources so as to promote the public health and welfare and the productive capacity of its population." Section 112(b), as revised in 61 FR 30816 (June 18, 1996), lists 188 HAPs believed to cause adverse health or environmental effects. Section 112(d) requires that emission standards be promulgated for all categories and subcategories of "major" sources of these HAP and for "area" sources listed for regulation, pursuant to section 112(c). Major sources are defined as those that emit or have the potential to emit (from all emission points in all source categories within the facility) at least 10 tpy of any single HAP or 25 tpy of any combination of HAPs. Area sources are stationary sources of HAPs that are not major sources.

The CAA requires the EPA to promulgate national emission standards for sources of HAPs. Section 112(d) provides that these standards must reflect:

> * * * the maximum degree of reduction in emissions of the HAP * * * that the Administrator, taking into consideration the cost of achieving such emission reduction, and any non-air quality health and environmental impacts and energy requirements, determines is achievable for new or existing sources in the category or subcategory to which such emission standard applies (42 U.S.C. § 7412(d)(2)).

This level of control is referred to as MACT. For new sources, the standards for a source category or subcategory "shall not be less stringent than the emission control that is achieved in practice by the best controlled similar source, as determined by the Administrator" (section 112(d)(3)). Existing source standards shall be no less stringent than the average emission limitation achieved by the best performing 12 percent of the existing sources for source categories and subcategories with 30 or more sources, or the average emission limitation achieved by the best performing 5 sources for sources or subcategories with fewer than 30 sources (section 112(d)(3)). These two minimum levels of control define the MACT floor for new and existing sources.

On July 16, 1992 (57 FR 31576), the EPA published a list of categories of sources slated for regulation under section 112(c). This list included the secondary aluminum production source category regulated by the standards being promulgated today. The statute requires emissions standards for the listed source categories to be promulgated between November 1992 and November 2000. On June 4, 1996, the EPA published a schedule for promulgating these standards (61 FR 28197). Standards for the secondary aluminum production source category covered by this rule were proposed on February 11, 1999 (63 FR 6946).

As in the proposal, the final standards give existing sources 3 years from the date of promulgation to comply. New sources that begin construction or reconstruction after February 11, 1999 must comply with the standards by the date of promulgation or upon startup,

whichever is later. The EPA believes these standards to be achievable by affected sources within the time provided.

Emission limits, operating limits, methods for determining initial compliance, as well as monitoring, recordkeeping, and reporting requirements are included in the final rule. All of these components are necessary to ensure that sources will comply with the standards both initially and over time. However, the EPA has made every effort to simplify the requirements in the rule.

The preamble for the proposed standards described the rationale for the proposed standards. Public comments were solicited at the time of proposal. To provide interested individuals the opportunity for oral presentation of data, views, or arguments concerning the proposed standards, a public hearing was offered at proposal. However, the public did not request a hearing; therefore, one was not held. The public comment period was from February 11, 1999 to April 12, 1999. A total of 36 comment letters were received. Commenters included industry representatives, State and local agencies, and environmental groups. Today's final rule reflects the EPA's full consideration of all of the comments. Major public comments on the proposed rule along with the EPA's responses to these comments are summarized in this preamble. A more detailed discussion of public comments and the EPA's responses can be found in the Response to Comment Document (Docket No. A–92–61).

II. Summary of Final Rule

A. Applicability and Definitions

The rule applies to the following affected sources at secondary aluminum production facilities: each new, existing or reconstructed aluminum scrap shredder, thermal chip dryer, scrap dryer/delacquering kiln/decoating kiln, group 2 (*i.e.*, processing clean charge only and no reactive fluxing) furnace, sweat furnace, dross-only furnace, and rotary dross cooler; each existing secondary aluminum processing unit (composed of all existing group 1 (*i.e.*, processing other than clean charge and/or performing reactive fluxing) furnace emission units and all existing in-line fluxer emission units); and each new or reconstructed secondary aluminum processing unit (composed of all new or reconstructed group 1 furnace emission units and all new or reconstructed in-line fluxer emission units which are simultaneously constructed or reconstructed after February 11, 1999) located at a secondary aluminum production facility that is a major source of HAP. The rule also limits emissions of D/F from each new, existing or reconstructed thermal chip dryer, scrap dryer/delacquering kiln/decoating kiln, and sweat furnace; and from each new, existing or reconstructed secondary aluminum processing unit that contains one or more group 1 furnace(s) not processing clean charge, and that is located at a secondary aluminum production facility that is an area source. The rule also applies to secondary aluminum production processes designated as affected sources if they are collocated at a primary aluminum production facility.

The rule does not apply to facilities that are aluminum extruding, aluminum die casting, and aluminum foundry facilities that (1) only process clean charge and material generated within the facility, and (2) do not operate a thermal chip dryer, sweat furnace, or scrap dryer/delacquering kiln/decoating kiln. Those aluminum extruding, die casting, and foundry facilities that purchase or otherwise obtain materials other than "clean charge" and operate a group 1 furnace or operate a thermal chip dryer, sweat furnace, or scrap dryer/delacquering kiln/decoating kiln are considered secondary aluminum production facilities under this rule and as such are subject to the requirements of this rule.

The EPA categorized process furnaces into two classes. A group 1 furnace includes any furnace that melts, holds, or processes aluminum containing paint, lubricants, coatings, or other foreign materials with or without reactive fluxing, or processes clean charge with reactive fluxing. Reactive fluxing means the use of any gas, liquid, or solid flux, other than cover flux, (including but not limited to chlorine gas and magnesium chloride) that results in a HAP emission.

A group 2 (clean charge) furnace processes only molten aluminum, T-bar, sow, ingot, billet, pig, alloying elements; thermally dried unpainted aluminum chips, aluminum scrap dried at 343 °C (650 °F) or higher or delacquered/decoated at 482 °C (900 °F); oil- and lubricant-free unpainted/uncoated gates and risers; and oil- and lubricant-free unpainted/uncoated scrap, shapes, or products (*e.g.*, pistons) that have not undergone any process (*e.g.*, machining, coating, painting, etc.) that would cause contamination of the aluminum (with coatings, oils, lubricants, or paints); and internal runaround. A group 2 furnace performs no fluxing or performs fluxing using only nonreactive, non-HAP-containing/non-HAP-generating gases (such as argon and nitrogen) or agents.

This rule allows permitting authorities the discretion to defer Clean Air Act (CAA) title V operating permitting requirements until December 9, 2004, for area sources of air pollution subject to this NESHAP. This deferral is an option at the permitting authority's discretion under EPA-approved part 70 permit programs and not an automatic deferral that the source can invoke. Thus, Part 70 permitting authorities are free to require area sources subject to this NESHAP to obtain title V permits. In areas where no approved part 70 program is in effect, and the part 71 permitting program is administered by EPA, we will defer the requirement for title V permitting for these area sources until December 9, 2004. In a separate action, the Agency proposed final amendments on August 18, 1999 to extend title V operating permit deferrals for area sources in five source categories (64 FR 45116).

B. Emission Limits and Requirements

The rule applies to major sources. In addition, the following emission sources located at secondary aluminum production facilities that are area sources of HAPs are regulated for emissions of D/F: new and existing thermal chip dryers, scrap dryers/delacquering kilns/decoating kilns, sweat furnaces, and secondary aluminum processing units containing group 1 furnaces that process other than clean charge. The emission limits for these units are summarized in Table 1 to subpart RRR in the final rule.

The particulate matter (PM) emission limits apply to new, reconstructed and existing aluminum scrap shredders, scrap dryers/delacquering kilns/decoating kilns, dross-only furnaces, rotary dross coolers, and secondary aluminum processing units at secondary aluminum production facilities that are major sources. Controlling PM emissions also controls emissions of HAP metals. A surrogate approach to emission limits is used to allow easier and less expensive measurement and monitoring requirements.

The rule limits total hydrocarbon (THC) emissions from new and existing thermal chip dryers and from new and existing scrap dryers/delacquering kilns/decoating kilns at secondary aluminum production facilities that are major sources. The THC represents emissions of HAP organics. Hydrogen chloride (HCl) emission limits apply to new, reconstructed and existing scrap dryers/delacquering kilns/decoating kilns, and secondary aluminum processing units at secondary aluminum

production facilities that are major sources. The HCl is itself a HAP, and it also serves as a surrogate measure of HAP inorganics including hydrogen fluoride (HF) and chlorine (Cl_2) emissions. The rule limits emissions of D/F from new, reconstructed and existing thermal chip dryers, scrap dryers/delacquering kilns/decoating kilns and sweat furnaces, and secondary aluminum processing units at secondary aluminum production facilities that are major or area sources. The D/F emission limit does not apply to facilities that are primarily die casting, extruding, or foundry facilities provided that they do not operate a thermal chip dryer, sweat furnace, or scrap dryer/delacquering kiln/decoating kiln, and do not process materials other than materials generated within the facility unless it is "clean charge" (defined in the rule). No surrogate is used for D/F emissions.

C. Operating and Monitoring Requirements

The rule includes operating and monitoring requirements for each affected source and emission unit within a secondary aluminum processing unit to ensure continuous compliance with the emissions standards. The rule incorporates all requirements of the NESHAP general provisions (40 CFR part 63, subpart A) except as provided in the appendix to the rule (Appendix A to subpart RRR). The operating and monitoring requirements are summarized in Table 2 to subpart RRR in the final rule.

D. Reconsideration of Standard for Die Casters and Foundries

EPA has based its MACT standard for aluminum die casting and aluminum foundries, as well as its assessment of the economic impacts on small businesses in these industries, on information on representative facility practices provided to EPA by these industries to date. However, affected facilities in these industries have expressed concern that the information and assumptions upon which EPA has relied may be incomplete or may not adequately represent the processes and emissions at such facilities. Accordingly, EPA has decided that it would be prudent to gather further information concerning facilities in the aluminum die casting and aluminum foundry industries and then to reevaluate MACT requirements and the economic impact on small businesses in these industries in light of this information.

Accordingly, EPA will issue within three months a proposed rule to remove the aluminum die casting and aluminum foundry industries from the present secondary aluminum standard, and a proposed rule to stay the applicability of the present standard to the aluminum die casting and aluminum foundry industries while EPA reevaluates the MACT requirements applicable to such facilities. EPA intends to take final action concerning the proposed stay as soon thereafter as practicable. EPA will also initiate a formal process to collect further information from the facilities in these industries on the activities in which they engage and the potential of these activities to contribute to HAP emissions. After evaluating this information, EPA will make a new determination concerning MACT requirements for both major facilities and area sources in these industries. EPA expects to adopt any alternative MACT standard applicable to these industries, and to take final action to remove the aluminum die casting and aluminum foundry industries from the current standard, within two years. Any alternative MACT standard adopted for these industries will provide three years from the date of promulgation for affected facilities to achieve compliance.

III. Summary of Responses to Major Comments

This section presents a summary of responses to selected comments. A more comprehensive comment summary and responses can be found in Docket No. A–92–61.

A. Applicability

Comment: Several commenters wanted to exempt unvented in-line flux boxes from testing and monitoring requirements and suggested regulating them via work practices based on the following statements:

- Emissions do not have the potential to exceed the emission limit because small amounts (< 0.2 lbs/ton) of chlorine gas flux are used;
- There is no acceptable method for sampling their fugitive emissions, so exclusion from testing and monitoring would improve the SAPU concept and substantially reduce costs; and
- Unvented in-line flux boxes are a pollution prevention design that operate within allowable OSHA limits and should be considered representative of the MACT floor when properly installed.

Response: Unvented in-line fluxers are capable of using and emitting chlorine and HCl in excess of the HCl emission standard for in-line fluxers, 0.04 lb/ton. One manufacturer of unvented in-line fluxers specifies a flux rate of 0.92 pounds chlorine per ton aluminum. The Agency has no reason to believe that fluxing at 0.2 to 0.9 lb/ton in an "unvented" in-line fluxer will meet the MACT floor level of emissions. Owner/operators can meet the emission limit by capturing and venting emissions to add-on controls or limiting the chlorine flux input to the fluxer. Limiting chlorine flux input to levels below the emission limit and monitoring flux addition is a work practice that would avoid the need for testing to demonstrate compliance. If testing is necessary, testing costs may be reduced through like-for-like testing allowed in the final rule, *i.e.*, with multiple uncontrolled flux boxes of same design and same operating practice, only one needs to be tested to demonstrate compliance.

The commenter's claim that such units cannot be tested is not valid. One unvented flux box at a facility that will be subject to this rule has been tested since proposal, and the results reported to the Agency. This particular unit was tested by measuring emissions at the point where fluxed metal exits the flux box. Another method of testing is to construct a temporary enclosure around the fluxer for the short duration of performance tests to capture fugitive emissions for measurement purposes (see Docket Item IV–A–1). Following the performance tests, flux usage must be monitored, and the flux box operating procedures must be maintained to ensure continuous compliance with the HCl standard.

With regard to "unvented" fluxers being a pollution prevention design that should be considered a MACT floor, commenters have referred to perceived lower emissions that presumably are achieved by lower and more efficient use of fluxing agents. The MACT floor technology for control of in-line flux boxes upon which the emission limit is based is a lime-injected fabric filter; this technology can achieve an emission limit of 0.04 lb/ton HCl. No data were provided by the commenters to demonstrate equal or lower emissions from "unvented" fluxers over the full range of input flux as compared to vented fluxers with the floor technology.

Comment: Several commenters opposed regulation of area manufacturing sources of D/F emissions, such as extrusion, die casting, and foundry facilities. Another commenter asserted that the EPA assumed area and major source D/F emitting processes emit at about equal rates per ton of feed, but data available to EPA for side-charge and roll top melters processing clean charge show those furnaces are not significant

sources of D/F as compared to furnaces charging dirty scrap. This commenter also contended the EPA assumption that 55 percent of all delacquering furnaces are located at area sources was the basis for regulating area sources. In comments on the Integrated Urban Air Toxics strategy, the commenter claimed there were inappropriate assumptions and errors in the inventories for sections 112(c)(6) and 112(k).

Response: The EPA acknowledges the error regarding delacquering furnaces in the inventory for the Integrated Urban Air Toxics strategy. The EPA recognizes that emissions of D/F from affected sources in secondary aluminum processing facilities are site-specific and depend on the type of materials (scrap) fed to the process, flux type, flux rate, and flux practices among other variables. For both major and area sources, the materials fed to the furnace and combustion processes contain varying amounts of oil (hydrocarbons) and coatings (hydrocarbons and chlorides). These compounds found in scrap containing oils and coatings, as well as some fluxes, are D/F precursors. Processes located at facilities that are area sources and using the same feed and flux materials as are used at major sources will emit D/F at levels equal to the same processes at major source facilities.

The EPA is not claiming that the total D/F emissions from affected sources located at facilities that are area sources are equal to the total D/F emissions from facilities that are major sources. However, there were also other commenters who mentioned large numbers of sweat furnaces in their States whose emissions were not counted, suggesting there are additional D/F emissions beyond those estimated in the national impacts at proposal. The EPA has developed an estimate of D/F emissions from sweat furnaces located at facilities that are area sources. That estimate is now included in the national impact calculations.

Comment: Numerous commenters representing aluminum extruders, aluminum die casters, and aluminum foundries stated that their facilities should not be regulated because they differ fundamentally from large secondary aluminum production facilities in emission potential, particularly D/F emissions. The commenters raised the following issues:

• Extruders encompass a broad spectrum of facilities and appear to fall within the broad definition of secondary aluminum production facilities, which range from relatively small facilities owned by large companies to facilities owned by independent business people, many of which the commenter claimed are small businesses.

• Some extruders, die casters, and foundries use no purchased scrap but do use internally generated scrap, while other facilities use small amounts of "clean" purchased scrap. Some are concerned that regulation may interfere with the effort to recycle at the plant, while others who purchase scrap see the regulation as creating a disincentive to recycle from outside the plant.

• Impurities in scrap are a principal source of D/F precursors. The commenters stated that extruders, die casters, and foundries cannot be large contributors to D/F emissions because they use or process only small amounts of higher quality scrap and do limited fluxing. One commenter argued that EPA should exclude extruders as small contributors to D/F emissions as in *Alabama Power* vs. *Costle*, 636 F.2d 323 (D.C. Cir. 1980) using the de minimis exception articulated in that case.

• Previous EPA publications support the distinction between die casters and secondary aluminum production facilities:

•• The Documentation for Developing the Initial Source Category List defines secondary aluminum production as facilities that smelt, and not including die casters;

•• An EPA new source review guidance memo (Treatment of Aluminum Die Casting Operations for the Purposes of New Source Review Applicability from, Thomas Curran, Director, Information Transfer and Program Integration Division, December 4, 1998) states "die casting facilities typically need not be considered secondary metal production plants" (the commenters argued that this memo acknowledges that die casters could engage in in-house recycling of castings and not be considered a secondary aluminum production facility); and

•• The Secondary Brass and Bronze New Source Performance Standard (NSPS) distinguishes between facilities that reclaim brass and bronze and those that create a finished product.

Applying the D/F standard to affected sources located at facilities that are area sources will subject facilities such as extruders, die casters, and foundries to the burden of title V permitting and MACT monitoring and reporting. One of these commenters stated that no environmental benefit will be gained from regulating area source aluminum production facilities since they already meet the emission limitation.

Response: The EPA has considered these issues and responds as follows to the points raised:

• With respect to the first issue, the EPA agrees that based on the definition of secondary aluminum production facility and current operations of some facilities that are extruders, those extruders would be subject to this rule. Numerous comments on the applicability section and definitions in the proposed rule were received and after consideration of those comments, the EPA has revised those sections of the final rule. As part of the revisions, the EPA has concluded that aluminum extruding, aluminum die casting, and aluminum foundry facilities that process no materials other than materials generated within the facility and "clean charge" (defined in the rule), and that do not operate a thermal chip dryer, sweat furnace, or scrap dryer/delacquering kiln/decoating kiln are not secondary aluminum production facilities and, therefore, are not subject to the requirements of the rule. Based on comments and information received in response to the proposal and subsequent meetings with the sources, the Agency believes that most small businesses will not fall under the definition of secondary aluminum production facility. Those aluminum extruding, die casting, and foundry facilities that do purchase or otherwise obtain materials other than "clean charge" and/or operate a thermal chip dryer, sweat furnace, or scrap dryer/delacquering kiln/decoating kiln are secondary aluminum production facilities and are subject to this rule.

The commenter's reference to some small facilities being owned by large companies is consistent with the EPA's knowledge that large companies in the secondary aluminum production industry engage in extruding operations. The commenter also claimed that some extruders are owned by independent businesses, many of which are small, however no specific quantitative data were provided to assist the Agency in assessing potential impacts.

• With regard to the second issue, the regulation discouraging recycling within the plant, the final rule does not prevent facilities that are area sources from using internally-generated scrap as charge to their group 1 furnaces. Regarding purchased scrap, although some extruders, die casters, and foundries use only small amounts of purchased scrap in their operations, other information provided to the EPA since proposal indicates that some of this type facility use more than half scrap (purchased and internally generated) as feed/charge in their operations (see Docket Item IV–E–2).

The issue with purchased scrap is the level of contamination with D/F

emission precursors. The EPA worked with industry representatives during the regulatory development phase to establish definitions and specifications for purchased scrap that would yield lower HAP emissions. Data collected indicated that the percentage of oil and coatings in scrap (hydrocarbon and chloride content) varies over a large range. No concurrence was achieved on the levels of scrap oil and coatings content that would reliably limit the processing of D/F precursors from affected sources, nor was concurrence achieved on a way to measure these levels of oil and coatings. Further, a similar discussion with industry representatives failed to reach a consensus on how to define limited reactive fluxing, the other important aspect of D/F emission potential. The EPA has concluded that facilities in which aluminum scrap is processed, whether purchased or otherwise acquired from outside the facility, fall within the secondary aluminum production source category.

• With regard to the third issue, these commenters assert that these facilities are not large contributors to D/F emissions because they purchase only small amounts of scrap or "clean" scrap, thus limiting the availability of D/F precursors in the affected sources. However, three factors (the total quantity of scrap fed to processes, the percentage of oil and coatings contamination of the scrap, and the flux rate) are significant variables that affect generation of D/F precursors. As mentioned above, some facilities use significant amounts of purchased scrap.

Regarding the comment citing *Alabama Power* vs. *Costle*, 636 F.2d 323 (D.C. Cir. 1980), and requesting de minimis exemption for extruders, EPA notes that CAA Section 112(c)(6) requires EPA to regulate sources accounting in the aggregate for more than 90 percent of certain dioxin and furan emissions, and that EPA cannot use a de minimis rationale to exclude area sources from regulation if this would be inconsistent with this statutory mandate.

• With regard to the fourth issue, documentation for the Source Category Listing states that the secondary aluminum production source category includes "any facility engaged in the cleaning, melting, refining, alloying, and pouring of aluminum recovered from scrap, foundry returns, and dross, to form aluminum products such as alloy ingots, billets, notched bars, shot, hot metals, and hardeners." The documentation also states that the category includes pretreatment processes which include drying, burning, and sweating, among others. Although there can be differences in operations and products between secondary aluminum production facilities and those facilities that are primarily die casting, foundry, and extrusion facilities, for the purposes of this NESHAP, the Agency considers the die casting, foundry, and extrusion facilities that use aluminum scrap and other coated/painted aluminum bearing materials obtained from outside their facilities to be engaging in secondary aluminum production operations.

The EPA new source review guidance memo referenced by the commenter has, in addition to the commenter's quote, an extensive discussion of the fact that some facilities whose primary activity is die casting also perform secondary metals production from post-consumer scrap or unspecified aluminum scrap. This type of facility was identified in the memo as a "nested" secondary aluminum support facility. Such facilities also use processing equipment that is defined as an affected source under this rule. It is the acquisition of aluminum-bearing materials from outside the facility that are not "clean charge," and the presence of affected sources that subject the facility to this rule. The difference in products is not the determining factor.

The final rule clarifies that aluminum die casting, aluminum foundry, and aluminum extrusion facilities that process only clean charge (as distinct from scrap) are not secondary aluminum production facilities (regardless of the remelting of internally generated scrap), provided they do not operate thermal chip dryers, scrap dryers/delacquering kilns/decoating kilns, or sweat furnaces. Aluminum die casting, extruding, and foundry facilities that process aluminum scrap, etc., in the furnaces (i.e., materials that are not clean charge) from outside the facility are secondary aluminum production facilities and subject to the final rule.

• Regarding the fifth issue, the burden of title V permitting, monitoring, and reporting for area sources, the final rule has been changed to allow permitting authorities the discretion to defer the title V permitting requirements for secondary aluminum production area source facilities that are not otherwise subject to title V permitting requirements under other regulatory actions. A further change that will reduce the burden for area sources is that they will only be required to conduct an initial performance test to demonstrate compliance. The requirement to repeat the performance test every 5 years has been eliminated for area sources.

Facilities that use add-on controls will be required to monitor parameters in accordance with their approved site-specific OM&M plan. Facilities that are area sources which use purchased scrap, but meet the D/F emission limit without add-on controls, i.e., use work practices, will also be required to monitor in accordance with their site-specific OM&M plan. Their monitoring provisions will include a calculation method for determination of scrap contamination levels, or a scrap inspection program to demonstrate they are not exceeding the scrap quantity and oil and coatings contamination levels, and flux rate established during the initial performance test.

The environmental benefit of controlling D/F from these affected sources is reduction of emissions of an environmentally persistent HAP. The benefits of monitoring for those sources who meet the limit without add-on controls is continuing evidence that the operating practices used during the compliance tests are maintained and emissions remain at a level below the limit.

Comment: Commenters desired to allow new or reconstructed units into the SAPU and encourage EPA to do it with a discount applied to the new unit's allowed emissions. The commenters stated that:

• It will allow sources to take advantage of the more efficient fluxing achievable in new flux boxes, in particular the "unvented" flux boxes.

• It promotes pollution prevention and is consistent with common sense initiatives and project XL innovations that allow plantwide applicability limits.

• It is not standard avoidance, but a more effective way of complying.

Response: To allow new or reconstructed units into a SAPU consisting of existing units would involve averaging the emission reductions achieved by new and existing affected sources. Since new and existing sources are subject to separate standards and must individually demonstrate compliance, creation of a source which has both new and existing emission units is not permitted by the CAA. Therefore, EPA will not allow new units to become part of a SAPU comprised of existing units. In order for new units to have the same benefits available to existing emission units, the Agency has revised the rule to allow for a new SAPU, that is composed entirely of simultaneously constructed new sources and/or simultaneously reconstructed sources, in addition to the SAPU for existing emission units.

Comment: In comments on combining and treating emissions from existing sources with those from new sources in a single control system:

• One commenter asked to group an existing or new furnace with a new in-line fluxer as a separate affected source (outside the SAPU). The combined unit would have the same limits as the furnace by itself for PM, HCl, and D/F (*i.e.*, no emission increment for the new fluxer). The industry claimed a significant improvement in fluxing efficiency with much lower emissions is associated with moving fluxing from the furnace to in-line fluxers.

• Another commenter requested that the rule be expanded to affirm that new emission units may be ducted to existing control systems if capacity is available or can be expanded to accommodate the new source.

Response: The problem with combining a new affected source with an existing affected source is that the new source is required to meet the specified emission limits, but once combined, the new source emissions are not measurable separately from the emissions from the existing source. As noted in the response to the previous comment, there is no legal construct under the CAA that permits combining control requirements for existing and new sources, therefore, the combination of an existing furnace and new in-line fluxer is not permitted.

The revisions to the final rule do provide for the establishment of a SAPU composed entirely of simultaneously constructed new emission units. This will allow the combination of a new furnace and new in-line fluxer as a SAPU, but not allow combining a new furnace or in-line fluxer with an existing SAPU.

Comment: Several commenters were concerned about the applicability of the rule to sweat furnaces:

• One commenter, a manufacturer of sweat furnaces, expressed concern about economic impacts on small aluminum reclamation operators. This commenter estimated that there are at least several hundred sweat furnaces manufactured by them currently being used nationally with capacities considerably less than the model sweat furnace used in EPA's analysis of impacts (5,000 tons/year). All of their furnaces are equipped with integral afterburners. This commenter also submitted an afterburner performance test report showing 97.8 percent removal of PM by the afterburner and claimed, but did not have measurements, that D/F removal should be similar. The commenter stated that the preamble did not show D/F results upstream of the afterburners or what destruction efficiency was achieved.

• Another commenter attached a brochure from a manufacturer claiming to have distributed over 2,000 small sweat furnaces. This commenter states that the proposal underestimated the number of these sources. The commenter believes that testing and control costs will eliminate small businesses from the market and suggested that regulations for area sources be withdrawn until small business, health, and environmental impacts have been reassessed. Another manufacturer of sweat furnaces suggested a technology-based standard for area source sweat furnaces with no testing required.

Response: The EPA has no test data to support a comparison between PM and D/F removal efficiencies. The D/F emission limit in the proposed and final rules has been proven to be achievable with MACT floor technology.

Based on the information contained in these comments, the EPA requested additional information and data from sweat furnace manufacturers to further assess impacts of regulating D/F emissions from the furnaces. The large number of units reported to be manufactured suggested large numbers of these affected sources are currently in operation. The EPA's further investigation found that although one manufacturer who commented only sells sweat furnaces with integral afterburners for emission control; that is not the case for all domestic manufacturers.

Due to the large number of these sources and the types of scrap materials processed, their D/F emission potential is significant both individually and in the aggregate. Recognizing this, the EPA considered additional regulatory strategies for sweat furnaces and performed an economic analysis to examine the impacts of those strategies. The conclusion from this analysis is that the cost of measuring D/F emissions from sweat furnaces through a performance test is significant in comparison to the cost of the furnace and afterburner. Based on this analysis the EPA has revised the rule to add an alternative means of compliance. Owner/operators electing to install and operate an afterburner meeting the design criteria of operating temperature of at least 1600 °F and a 2 second residence time will not have to conduct performance tests. The final rule retains the numerical standard so that owner/operators with control equipment that does not meet the design criteria have the option to test to show that the D/F emissions are below the limit. These revisions to the proposed rule, combined with many anticipated State permitting authority decisions to exercise their discretion to defer the requirement for title V permits, will significantly reduce the burden for both large and small businesses operating sweat furnaces. The economic impact analysis conducted for this regulation reports minimal economic impacts to owners and operators of sweat furnaces.

B. Definitions

Comment: Numerous comments were received on the definition of "clean charge."

• One commenter stated that the definition should include as clean charge, outside runaround that is contractually ensured to be clean.

• Other commenters stated that they support inclusion of "non-coated runaround" scrap in the definition, which may have small amounts of lubricant, and that some runaround is returned from customers. These commenters stated that the rule should allow external, preconsumer, and non-coated runaround scrap in group 2 furnaces.

• Several commenters requested that EPA define non-coated runaround scrap or redefine clean charge to allow scrap covered with lubricants or substances low in materials that could generate D/F. Many die casters use scrap generated on-site (miscast material, defective parts, and cutoffs of excess aluminum) that may have inorganic agents (clay or talc) or die release agents (heavy waxes or high molecular weight oils) that do not generate D/F when burned.

• Commenters representing extruders also wanted to revise the definition to include purchased scrap low in materials that contribute to D/F generation.

• Other commenters noted the proposed definition of clean charge allows only pure aluminum (pure aluminum is an incorrect term) that cannot be cast in a die casting machine. They stated that the definition of clean charge also restricts the use of chips that have not been processed in a chip dryer and this is a disincentive for exploration of new technology (presses, centrifuges, and washers) alternatives to chip drying. Some facilities that do dry chips do not heat to 343 °C because it may oxidize the metal. The temperature to which chips must be heated to qualify as clean charge is arbitrary and was not considered with any input from foundries and die casters.

Response: In regard to the first four comments on "clean charge," EPA has reviewed and reconsidered the definition of clean charge. The

definition of clean charge at proposal erroneously included non-coated runaround scrap which commenters wanted clarified to include runaround from outside the facility (*i.e.*, external, relatively "clean," preconsumer, non-coated runaround). The commenters acknowledged that the runaround may have "small" amounts of lubricant and coatings. Lubricants, oils, and coatings are D/F precursors. As explained in a previous response, the EPA worked with industry representatives during the regulatory development phase to establish definitions and specifications for purchased scrap that would yield consistently lower HAP emissions when charged to furnaces. Data collected indicated that the percentage of oil and coatings in scrap (hydrocarbon and chloride content) varies over a large range. No concurrence was achieved on the levels of scrap oil and coatings content, or a universal method of measuring the scrap content of oils/coatings, that would reliably limit the processing of D/F precursors from affected sources. Group 2 and those group 1 furnaces that are "clean charge" furnaces have no D/F emission limit. It is not consistent with the concept of clean charge furnaces to allow oil- and lubricant-bearing scrap purchased or otherwise obtained from outside the facility to be charged as clean charge. For this reason, the Agency has clarified that the definition of clean charge includes internally generated runaround. Internal runaround is defined in the final rule as scrap material generated on-site by aluminum extruding, rolling, scalping, forging, forming/stamping, cutting, and trimming operations that do not contain paint or solid coatings. Aluminum chips generated by turning, boring, milling, and similar machining operations that have not been dried at 343 °C (650 °F) or higher, or by an equivalent non-thermal drying process, are not considered internal runaround. Clean charge also does not include "runaround" scrap that is purchased or otherwise obtained from outside the facility.

Secondary aluminum production facilities may use painted and/or purchased runaround in group 2 furnaces by drying or delacquering it to meet the definition of clean charge, so as to eliminate the possibility of D/F formation in the furnace. Owner/operators may also charge painted and/or purchased runaround scrap to uncontrolled group 1 furnaces in a SAPU, provided they achieve an initial compliance demonstration and operate according to an OM&M plan approved by the permitting authority. For group 1 furnaces operated without add-on controls, the plan would likely include a site-specific scrap inspection or certification program of some type to indicate the contamination level and to define the percentage of scrap in the total furnace charge.

As noted in a response to a previous comment, facilities that are primarily aluminum die casters, foundries, and extruders that process only on-site materials or clean charge, and that do not operate a thermal chip dryer, scrap dryer/delacquering kiln/decoating kiln, or sweat furnace are not secondary aluminum production facilities and are not subject to this rule.

• With regard to the fifth comment, relating to the use of the term "pure aluminum" in the definition of "clean charge" in the proposed rule, the definition has been revised for the final rule to eliminate the word "pure" as a modifier of aluminum and instead describe it as oil- and lubricant-free uncoated/unpainted aluminum.

With respect to the issue of chip drying and the potential for oxidation of the aluminum, the final rule does not contain a minimum temperature requirement for thermal chip drying to make the chips "clean charge." With regard to other chip processing, the Agency is not precluding new technology such as presses, centrifuges, and washers that may be capable of producing chips with no oily residue, thus qualifying those processed chips as clean charge.

C. Emission Standards and Operating Requirements

Comment: One commenter urged EPA to review the application of fluoride and chlorine fluxes in the secondary aluminum industry and to verify the appropriateness of HCl as a surrogate.

Response: Emission limits for HCl were proposed because test data indicate that HCl is emitted when chlorine and reactive chloride fluxes are used, and the technology representing the MACT floor for HCl removal, which was determined to be lime injected fabric filters, also achieves MACT floor level removal of chlorine and HF. Although some fluoride fluxes are used by the industry, differences in flux properties, cost relative to chlorine/chloride fluxes, and occupational health considerations related to in-plant particulate levels limit the amounts used, thus limiting the potential for HF emissions.

Comment: One commenter stated that emission limits do not reflect limits achievable using currently available technology, and that neither the limits nor the selected MACT accurately reflect MACT. The commenter stated that the MACT floor emission levels violate section 112 of the CAA in that they are not based on the best-controlled sources for new sources and are not at least as stringent as the best performing 12 percent for existing sources. According to the commenter, EPA should consider, but did not, emission limits more stringent than the floor. In a related comment, another commenter disagrees with the dioxin emission standards and states that they are unsupported by emissions data. According to the commenter, the method of developing the limit is inconsistent with the CAA and fails to recognize the law of averages and, in the case of SAPUs, is illegal because it permits individual group 1 furnaces to emit dioxin at levels in excess of the MACT floor.

Response: The commenters argued that EPA did not properly consider the available emissions data in establishing the MACT floor emissions limits. In the case, *Sierra Club* v. *EPA* (March 2, 1999), the DC Circuit held that because MACT standards must be achievable in practice, EPA must assure that the standards are achievable "under most adverse circumstances which can reasonably be expected to recur" (assuming proper design and operation of control technology). The court further held that EPA can reasonably interpret the MACT floor methodology language so long as the Agency's methodology in a particular rule allows it to "make a reasonable estimate of the performance of the top 12 percent of units," that evaluating how a given MACT technology performs is a permissible means of estimating this performance, and that new source standards need not be based on performance of a single source. The court's decisions give EPA latitude in determining the MACT floor and the MACT floor emission limits. The EPA determined the MACT floor based on information available for each affected source and emission unit. At proposal, the EPA selected emission limits at the floor level of control, and the commenters provided no additional emissions data for any pollutant for EPA to consider. The emission standards are based on the emissions levels achieved through the application of MACT floor technologies and account for variation in the process and in the air pollution control device effectiveness.

Comment: Several commenters did not want an exceedance of an operating parameter to be a violation of an operating requirement. According to the commenters:

• The rule is not clear as to what constitutes a violation of the operating requirements.

• Operating parameters are only indicators of process and control performance, not a direct measure of excess emissions.

• An exceedance should not to be a violation until six exceedances occur in a 6-month period.

• No more than one violation should be counted per 24 hour period for any one parameter.

• The rule is not clear on whether a failure to take corrective action in response to an exceedance is a violation of the standard.

• A failure to initiate corrective action within 1 hour should constitute a violation.

• The rule should specify that if corrective action is begun within 1 hour and completed in accordance with the startup, shutdown, malfunction (SSM) plan, no violation has occurred.

Response: The EPA has considered the issue of a deviation being a violation and addresses the commenters' points as follows:

• With regard to the commenters' first point, the language in the final rule has been written to make clear that a deviation of an operating parameter is a violation of the operating standard. Each major source facility owner/operator is required to define the compliance parameters to be monitored in their OM&M plan. Then, during the initial performance tests, they are required to monitor and establish the value or range of the parameters. These values must be reported in the results of the test and notification of compliance status to the permitting authority and must be approved by the permitting authority. During subsequent operations, if the monitored parameters exceed the values or fall outside the range determined during the initial performance test, it is a violation of the operating requirements of the standard, unless it is the result of a malfunction to which the facility responds to in accordance with the SSM plan.

• Regarding the second point, the owner/operator may use continuous emission monitors (CEMs) as a direct measure of the emissions rather than using operating parameters if such CEMs can be demonstrated to the satisfaction of the permitting agency to reliably measure emissions.

• Regarding the third point, the EPA has no basis for allowing six deviations before considering the facility to be in violation. The owner/operator has ample opportunity to establish a range for the operating parameters and must thereafter operate within that range.

• Regarding the fourth point, any deviation of an operating parameter limit is a violation of the operating standard, regardless of when it occurs, unless it is the result of a malfunction to which the owner or operator responds in accordance with the SSM plan.

• Regarding the fifth and sixth points, the rule requires corrective action as a result of an operating parameter deviation or bag leak detector alarm. Corrective action must be conducted in accordance with the operations, maintenance and monitoring plan. Failure to take corrective action and to complete corrective action as expeditiously as practicable is a violation of the operating standard.

• Regarding the seventh point, a deviation that is the result of a malfunction, to which the facility responds in accordance to its SSM plan, is excluded as a violation.

Comment: Several commenters disagreed with the requirement that capture and collection systems meet the criteria established by the American Conference of Governmental Industrial Hygienists (ACGIH) for hooding and ventilation systems. The commenters claimed EPA has not shown that MACT floor facilities' hooding and ventilation systems met ACGIH criteria so that the requirement is arbitrary; EPA should show that the facilities met the ACGIH criteria. Several commenters stated that because EPA has no data to support the requirement for ACGIH criteria for capture and collection equipment for existing sources, they recommended the requirement apply only to new sources. Other commenters stated that although currently protecting work space air quality, most existing systems would not meet ACGIH criteria, meaning significant expenditures to upgrade those systems. The EPA likely did not account for these costs in their economic analysis; they agree with the commenters who stated that the requirement should be limited to new or modified sources.

Response: For affected sources and emission units that require an air pollution control device, a capture and control system meeting ACGIH criteria is necessary for occupational safety and to meet the emission standards. The emission standards are based on systems that effectively capture and contain emissions at the source (minimizing fugitives) and convey them to the control device for removal. In addition, a capture and control system meeting ACGIH criteria with good hooding design will result in a lower volume of exhaust air to be treated, and in many cases, a smaller, lower-cost control device. The EPA considers an ACGIH capture and collection system to be part of MACT floor technology for affected sources with add-on controls.

Comment: One commenter supported not counting false alarms of the bag leak detection system in the alarm time. Another commenter stated that the monitoring and reporting requirements are reasonable in order to confirm compliance, with the exception of bag leak detectors. The commenter stated that a facility should not be penalized for rapid response to an alarm and recommends that the actual time be counted and delete the 1-hour minimum alarm time.

Response: The rule has been clarified so that false alarms are not counted and a 1-hour minimum has been retained in the final rule to encourage proactive fabric filter maintenance.

Comment: Several commenters did not want the labeling requirement. They argued that, (1) The inspectors can get this information from the OM&M plan in the office before entering the plant; (2) the labels will be hard to maintain in a plant environment; (3) it creates opportunity for violation with no commensurate benefit and increases/duplicates regulatory paperwork; and (4) the labeling requirement generates safety concerns.

Response: The EPA believes that labeling requirements are necessary for enforcement and operating purposes and should be retained due to the complexity of the industry and the numerous possible facility configurations (and emission units that could be combined within a SAPU). Labeling will help prevent operators from charging the wrong materials or improperly operating the units and will help inspectors in identifying units and determining if the units are being properly operated. However, EPA understands industry's concerns over the implementation of the labeling requirements and has revised the proposed rule to require labeling only at those affected sources and emission units that can be operated in more than one mode and/or which are physically very similar, including group 1 furnaces with and without add-on controls, group 2 furnaces, scrap dryers/delacquering kilns/decoating kilns, and in-line fluxers. In addition, the final rule requires that labels contain only the identification of the unit and the applicable operational standards. These revisions respond to industry's concerns regarding increased regulatory paperwork with no commensurate benefits while maintaining enforceability of the standards since both operators and inspectors will

clearly know the operating standards/requirements of each emission unit.

Comment: Several commenters disagreed with the requirement to maintain the same flux injection schedule as used in performance tests. One commenter stated that they should be given flexibility to develop schedule procedures during performance tests subject to approval by the permitting authority. According to one commenter, the requirement to maintain the same flux injection schedule as used in performance tests, which would be done under worst case conditions, would result in an increase in HCL emissions and cause other negative environmental impacts. Another commenter stated that this requirement will cause increased HCL emissions for uncontrolled group 1 furnaces and will restrict work practices to minimize chlorine use. The commenter suggested a separate provision to maintain the same flux injection schedule for baghouses with semi-continuous lime feed systems.

One commenter wanted flux monitoring on a monthly basis and the schedule requirement eliminated. The rule could be interpreted to preclude a system with computerized monitoring of furnace operations/controls with correlated emissions and online continuous emissions calculations.

Response: Owners or operators are required to conduct performance tests under the highest load or capacity reasonably expected to occur. This is represented by the maximum reactive flux rate. The final rule provides that sources may flux (on a lb per ton of feed/charge basis), up to the limit established during a successful performance test, and does not require maintaining the same schedule. The rule also does not require owners or operators to use more flux than necessary to produce a saleable product. These requirements will not lead to increased HC1 emissions.

The standards for emission units performing reactive fluxing, all of which are included in the SAPU affected source, were developed using emissions data gathered during a complete cycle. Because of the difference in cycle times and schedules, the EPA recognized the need to develop emission limits for SAPUs that would account for overlapping cycles of the emission units included in the emissions calculation and a 3-day, 24-hour rolling average was selected as the maximum averaging time required. Reactive flux monitoring on a monthly basis is not acceptable in that it is inconsistent with the emission standards based on 3-day, 24-hour rolling average and the established monitoring parameter values or ranges derived during the performance test. Monitoring over a period consistent with the basis of the emission standards provides the necessary evidence of continuous compliance.

The issue of flux injection rate and schedule is related to lime injection practice for the fabric filter control systems. The final rule provides operating requirements for the floor technology, which is continuous lime injection systems with lime-injected fabric filters. Owners/operators who want to use intermittent lime feed systems (as opposed to continuous injection) must show compliance with the emission limits and must apply to the permitting authority for approval of an alternative lime addition monitoring procedure. The owners/operators must provide information as necessary to show that the applicable emission limits will be achieved on a continuous basis.

The rule does not preclude the use of computerized systems that correlate controls and operating practices with emissions and calculate emissions on a continuous basis once this approach is approved by the permitting authority and incorporated into the site-specific OM&M plan.

Comment: Several commenters disagreed with the +25 °F associated with the inlet temperature limit for fabric filters established during the initial performance test. According to two commenters, the operating temperature of these fabric filters will vary more than 25 °F due to changes in ambient temperatures. This creates an unnecessary risk of violation and provides no environmental benefit. Another commenter stated that instead of the temperature requirement, electrochemical HCl sensors for automatic lime feed adjustment and other automatic systems should be considered to allow greater operating flexibility. One commenter stated that in-line fluxers are not regulated for dioxin emissions and therefore do not need a temperature limit.

Response: The proposed rule has been changed to eliminate this requirement for fabric filters only controlling in-line fluxers since these units operate at temperatures that are close to ambient temperature. For other affected sources and emission units, or fluxers ducted to a device co-controlling other sources, the +25 °F limit is retained. Operators would be expected to add dilution air or water sprays as required to maintain the fabric filter inlet temperature within the range. Also, performance tests could be conducted at worst case conditions. For example, performance tests could be conducted so that the inlet temperature is much higher than the normal operating inlet temperature (450 °F vs 380 °F, for example, thus providing a larger operating range). Dioxin formation is strongly influenced by the temperature at the fabric filter inlet, and temperature control is the means of preventing D/F formation (and enhancing HCl removal) in the fabric filter. Temperature is also a parameter which is monitored to ensure continuous compliance between periodic performance tests. This is because it is an indicator of control device performance for D/F and HCl emissions.

Comment: According to one commenter, owners and operators could demonstrate compliance with the HCl emission limit by monitoring total chlorine input and showing it to be less than the emission limit.

Response: The EPA agrees that, for in-line fluxers and group 1 furnaces processing only clean charge, operators may demonstrate compliance (in lieu of performance tests) by demonstrating that reactive flux injection is limited to a rate which would not exceed the standard if emitted in its entirety.

D. Monitoring Requirements

Comment: Several comments were received that requested more flexibility in the monitoring requirements aimed at reducing the burden to the industry:

- One commenter stated that the operating and monitoring requirements of §§ 63.1506 and 63.1510 are too prescriptive and not consistent with preamble statements regarding flexibility.
- Several commenters stated that EPA should allow alternative site-specific monitoring and operating plans to improve feasibility and cost effectiveness.
- Another commenter stated that separate provisions should be included in each of §§ 63.1506 and 63.1510 allowing facilities to develop alternative procedures approvable by the applicable permitting agency.
- Two commenters claimed the provisions will result in burdensome, labor-intensive requirements without commensurate benefit to the environment.
- Another commenter with a rolling mill facility claimed their plant is operating at demonstrated low emission levels and seeks monitoring plan flexibility to allow their facility to continue in its present mode. Referring to this plant, another commenter stated that the plant has developed a correlation between opacity and PM which has been used for over a year, in accordance with a regulatory order. This monitoring has been approved by EPA

and the local agency and is federally enforceable.

Response: The final rule has been written to incorporate more flexibility in the monitoring requirements:

• With regard to the commenters' first, second, and third points, the final rule includes explicit provisions for obtaining approval to use alternative monitoring procedures and lists the types of information needed in the application. It includes data or information to justify the request such as technical or economic infeasibility, a description of the proposed alternative monitoring requirements including operating parameters and how the limit for SAPUs (if SAPUs are included in the application) will be calculated, and information as to how the alternative monitoring requirements would provide equivalent or better assurance of compliance with the standards.

In addition, in response to the numerous comments received regarding the proposed monitoring and operating provisions, the final rule has been written to provide more flexibility to individual facilities in developing their OM&M plans and for approval of site-specific monitoring and operating alternatives, within EPA guidelines, by the permitting authority. Additional comment responses below discuss some specific changes made in the final rule.

• Regarding the fourth point, the monitoring requirements are necessary to demonstrate continuous compliance and, as such, are environmentally beneficial. Most, if not all, of the monitoring data collection or logging can be computerized and, therefore, will not be labor intensive.

• Regarding the fifth point, specifically, the final rule allows the owner/operator of a plant to apply to the Administrator for alternative monitoring, if necessary, or document their current procedures in the facility OM&M plan. The OM&M plan is submitted to the permitting authority for review and approval. The final rule gives more flexibility, for example, through guidance for scrap inspections (used in operating limits and monitoring) that is less prescriptive and more options for lime injection monitoring.

Comment: Several commenters stated that the monitoring frequencies and data quality objectives are too restrictive and specific for application across a diverse industry and bear no relevance to the emission standards or ensuring proper operation of emission controls. Another commenter agreed with the selection of the monitoring parameters in the proposed rule, but stated that the monitoring intervals are too frequent.

Response: Monitoring frequency requirements are related to the need for evidence of continuous compliance, and frequent readings are essential to provide the demonstration. However, the final rule changes the frequency of recording monitored parameter values from that proposed. For example, the frequency of recording fluxing rates has been reduced by requiring readings only during periods when flux additions are occurring. Additional options included for monitoring free-flowing lime change those monitoring and frequency requirements and increase the monitoring options. Furthermore, the provisions for site-specific OM&M plans approved by permitting authorities allow opportunity for adjustment of monitoring, within EPA guidelines, to fit site-specific conditions. Comments dealing with data-quality objectives for specific monitored parameters are addressed in more detail below.

Comment: Several commenters argued that the requirements for accuracy of 1 percent when applied to feed/charge weight and flux injection rates are overly stringent and burdensome and create an unnecessary increment for a violation.

Response: The EPA has retained the 1 percent accuracy requirement in the final rule. However, the EPA recognizes there may be situations in which 1 percent accuracy for feed/charge weight and chlorine flux injection rate is not workable. An example of this may be operating at a very low flux injection rate. The final rule has been written to allow the permitting authority to approve alternative accuracy requirements for monitoring equipment, on a site-specific basis, in situations where the 1 percent accuracy requirement is not workable and where the owner/operator provides data/information to substantiate that emission standards will be achieved on a continuous basis.

Comment: In comments on accuracy of performance test measurements and feed/charge weight measurements:

• One commenter stated that the EPA reference methods are not better than 10 percent repeatable, so the requirement for 1 percent accuracy in charge weight is arbitrary and unnecessarily burdensome.

• Another commenter requested less stringency in the accuracy requirement for the sources whose emissions are well under the emission limit, noting that the expected accuracy of Methods 26A and 5 is 10 percent. This commenter suggested that the charge weight monitoring be restricted to only those sources having to comply with a lb/ton emission limit.

• An additional commenter stated that an aggregate accuracy of 5 percent is more representative of reproducible floor practice.

• Another commenter wanted the weight monitoring not to be required for each emission unit, but allowed to be aggregated across emission units.

Response: The EPA considered the measurement accuracy issue raised by the commenters and addresses their points as follows:

• With regard to the commenters' first, second, and third points concerning the test method accuracy, the EPA notes that the variability in the test methods, process, and control equipment is incorporated into the testing results upon which the emission limits are based. The limits have been established to accommodate that variability. Given that the emission limits are on a lb-of-emission/ton-of-feed (or charge) basis, it is also in the owner/operators best interest to make an accurate weight determination because inaccurate measurements could cause them to be out of compliance. As noted in the previous response, the final rule provides additional flexibility with regard to feed/charge measurement in situations where the 1 percent accuracy is not workable.

• Regarding the fourth point, weight monitoring is required because the emission limits are based on lb/ton of feed/charge or product. Under the site-specific OM&M plans, individual emission units of the same type may have different allowable emission rates based on the presence of add-on control devices, fluxing practice, and feed/charge practices. The only way to determine compliance is to monitor weights for individual emission units.

Comment: Commenters wanted the compliance date to be 3 years after promulgation rather than "on or after the date of the initial performance test." They argued that:

• Carrying out performance tests prior to the end of 3 years is essential to completing the monumental job; but they do not like having to comply "on and after the date of the initial performance test" which could be the emission test program for the SAPU.

• The submittal deadlines for the OM&M plan, the SAPU emission plan, and the site-specific test plan are inconsistent with each other; they wanted EPA to remove all the interim compliance requirements to give the necessary flexibility to evaluate and agree with the permitting agency on compliance requirements before the 3-year deadline.

Response: A facility must be in compliance on and after the date of the

initial performance test. The date of that initial performance test, for existing sources, may be up to 3 years after the promulgation date of the standard. For existing SAPUs, the initial performance test is considered to be the date of approval of the OM&M plan by the permitting authority.

In response to the comments regarding the inconsistent plan requirements and dates for submittal, the EPA has revised and clarified those requirements. The final rule requires the owner/operator of a SAPU to perform tests that will define the operating modes of the controlled and uncontrolled emission units within the SAPU, and to define which parameters to monitor to demonstrate continuous compliance. These same tests can be used to measure the emission rates from the affected sources and emission units for performance test purposes. A site-specific test plan for this program must be submitted to the permitting authority for review and approval before the tests are conducted. The plan must identify the parameters to be monitored during the tests, the test methods to be used, the units to be tested, and planned operating modes for each unit during the tests. After the test plan has been approved by the permitting authority, the owner/operator is required to notify the Administrator of the test dates.

The results from this test program, including the emission rates measured, values of parameters monitored, monitoring parameters selected by the owner/operator for compliance demonstration, and values of the parameters to be used as operating limits must be submitted to the permitting authority for review and approval. As a result of the review, the permitting authority may request changes to selected monitoring parameters or values of the parameters used for compliance demonstration if it is determined the parameters or values do not provide an adequate means of demonstrating continuous compliance. When all of these elements are approved by the permitting authority, the owner/operator prepares an OM&M plan using the approved monitoring scheme and submits the OM&M plan to the permitting authority for approval. The compliance date is the approval date of the OM&M plan. The approved OM&M plan will be included by reference in the operating permit.

The latest date for an existing facility to achieve compliance is 3 years from the date the standard is promulgated. The OM&M plan must be submitted to the permitting authority for approval no later than 6 months before the planned compliance date. Given these conditions and lead times for preparing plans and conducting tests, it is clear that owner/operators must act expeditiously to develop test plans and execute the test programs.

Facilities that choose to comply by demonstrating that each emission unit in the SAPU meets the emission limit for that unit, and by monitoring the parameters as designated in the rule for each emission unit and control device, are also required to develop a test plan and notify the permitting authority of the test date(s).

Comment: One commenter stated that inspection of lime feed systems once per 8-hour shift and more frequently when found to be plugged may be difficult, arguing that visual inspection at silo and bin tops is dangerous. The commenter suggested alternate language that reduces the required checks from every 4 hours for 3 days, if plugged, to checks for only 2 consecutive 4-hour periods following restoration to free flow. Another commenter also disagreed with the requirement to inspect every 4 hours for 3 days, even if the problem is corrected earlier.

Response: Based on the comments received the final rule has been written to provide other options to demonstrate free-flowing lime. In addition to the option to perform visual checks to verify free-flowing lime, the owner/operator may use devices such as load cells to demonstrate this via weight changes in lime feed bins, use pressure sensors in pneumatic conveying systems to distinguish low or "no flow" conditions, continuously monitor lime feed rate, use an HCl monitoring device at the fabric filter outlet, or another method subject to approval by the permitting authority.

Comment: One commenter requested that lime feeder inspection requirements and corrective action requirements demonstrate compliance and that discovery and correction of a blockage or feeder setting drift not be an automatic violation. The commenter suggested that the rule be rewritten to require corrective action when necessary and not to make blockage or feeder setting drift a violation.

Response: As noted in the response to the previous comment, the final rule provides additional options for monitoring the lime system to maintain free-flowing lime. One of those options, the HCl monitor, provides a direct indication of continued effective operation of the control system which is the desired goal of any monitoring option selected. Other options that detect lime feeder blockages are not direct and immediate performance indicators, so the time until remedied is a critical variable. For this reason, EPA requires maintenance of free flowing lime in the feed hopper or silo at all times. Blockages that occur as a result of equipment breakage or failure would potentially fall under the malfunction provision, and if determined to be a malfunction, would be covered by the SSM plan and would not be a violation, if corrected in accordance with the SSM plan. However, continued and frequent blockages indicate a system design and operating problem rather than a malfunction.

Comment: Several commenters objected to the proposed regulatory requirements for scrap inspection programs. They stated that the requirements are too onerous, expensive, complex and overly prescriptive, and further, some provisions are not technically feasible or cannot be reasonably met. Three of the commenters suggested that the broadly stated scrap inspection requirements provided in the preamble to the proposed rule could be acceptable, and that approval of site-specific plans by the permitting authority would be a more acceptable requirement. Two commenters also stated that the scrap should not have to be inspected if the necessary control systems are in place. According to these commenters, inspection is only needed for control by work practices or pollution prevention. They stated that the EPA needs to be clearer as to which sources are covered; the preamble says all furnaces and the rule says uncontrolled group 1 furnaces.

Response: The scrap inspection program requirements apply only to those facilities that elect to use such a program as a monitoring technique to ensure the oil and coatings content of scrap charged to a group 1 furnace stays below levels established during the performance tests. Such a program could apply to facilities that have only uncontrolled group 1 furnaces, or facilities that have both add-on controlled and uncontrolled group 1 furnaces.

As a result of the numerous comments received regarding the scrap inspection program elements, the EPA has modified the proposed rule. The detailed requirements contained in the proposed rule have been deleted and the general scrap inspection guidelines provided in the proposal preamble have been adopted. This change will provide more flexibility to owner/operators to tailor the program to specific conditions for their facility. The scrap inspection program, if selected by the facility, will become part of the site-specific OM&M plan. The specific inspection program elements, which must be consistent

with guidance in the rule, will be approvable by the permitting authority as part of the site-specific OM&M plan and will be enforceable under the facility's permit.

Comment: Several commenters wanted EPA to allow testing one representative unit from a group of similar sources, that is one unit to represent similar furnaces or in-line fluxers, instead of having to test every emission unit. One of the commenters stated that this practice should be allowed for either controlled or uncontrolled units. Several commenters claim this approach is widely used under existing State permits and has been used by EPA in other NESHAPs. Commenters claimed that it would significantly reduce costs, provide flexibility, and provide more cost-effective test programs.

Response: Based on the comments received, the EPA is modifying the testing requirements to allow representative or similar uncontrolled emission units that use like charge and flux materials to be tested, instead of requiring each unit to be tested. Testing of representative or similar units may be used provided approval is obtained from the applicable permitting authority. The representative unit selected for testing must be subject to the same work practices and be of the same design as those emission units it is representing for test purposes. The representative unit must be tested under worst case conditions. It is up to the owner/operator to define the worst case scenario(s) for review and approval by the permitting authority. At least one of each different style unit must be tested. Each add-on control device controlling emissions from an affected source or emission unit must be tested.

E. Impacts

Comment: Several commenters disagreed with the results of EPA's regulatory impact analysis and believed that EPA underestimated the cost of the rule. The commenters identified the following as deficiencies in the impact analysis:

- The EPA underestimated the number of area sources that would be impacted as a result of the area source D/F standard. In particular, owners or operators of sweat furnaces, die casting facilities, foundries, and extruders were identified as potentially affected area sources that were either excluded or not adequately accounted for in the analysis. Furthermore, the commenters claimed that the proposed monitoring, recordkeeping, and reporting, and title V permit requirements would impose a significant burden on area sources.
- The EPA understated the number of small businesses that would be affected by the rule and, as a result, EPA's analysis of impacts on small entities was not adequate. According to several of the commenters, the small business impacts analysis underestimated small business impacts because it did not accurately account for sweat furnaces, die casting facilities, foundries, and extrusion facilities, many of which are small businesses and would be subject to the rule. The commenters also claimed that the proposed monitoring, recordkeeping, reporting, and title V permit requirements would impose significant burdens on these small businesses. They argued that the rule would have a significant impact on a substantial number of small entities and that EPA must, therefore, perform a regulatory flexibility analysis as required by the Regulatory Flexibility Act.
- Commenters took issue with the methods and assumptions used by EPA to estimate the costs and economic impacts of the rule, including failure to adequately account for the large number of affected area sources, title V permitting costs for area sources, and underestimating performance test costs due to the assumption of shared stacks. As a result, the commenters state that EPA's costs and economic impact estimates are too low. They argue that the annualized cost of the rule exceeds $100 million and is, therefore, a significant regulatory action under Executive Order 12866.

Response: Based on the numerous comments received regarding the regulatory impact analysis, the EPA has reviewed, revised, updated, and refined the analysis to address commenters' points:

- With regard to commenters' first point, for the proposed rule, the EPA used the information available on area sources of D/F emissions and requested additional information on the number of area sources, levels of emissions from these sources, the level of control currently employed, and the number of area sources that are also small businesses. In response to the comments on the proposed rule and using the information provided by commenters on sweat furnaces, die casting facilities and foundries, EPA has reassessed the cost of the rule on area sources (see Docket No. A–92–61). In addition, EPA has clarified and, in some cases, revised the proposed rule to address commenter concerns that the proposed rule will be overly burdensome for area sources. These changes include clarifications or revisions in the applicability of the rule, the performance testing requirements, the scrap inspection program, and giving the State permitting authorities the discretion to defer the requirements for a title V permit for area sources. On the basis of the information submitted to EPA during the public comment period and changes made to the proposed rule that narrow the applicability to facilities that are area sources, primarily aluminum extruders, die casters, and foundries, the EPA believes the number of those facilities subject to the rule to be small.
- Regarding the commenters' second point, after reviewing the comments on the small business impacts of the proposed rule and using the information on sweat furnaces, die casting facilities, and foundries provided by commenters, EPA has refined its small business impacts analysis (see Docket No. A–92–61). The analysis shows that the final rule will not have a significant impact on a substantial number of small businesses; therefore, no regulatory flexibility analysis is required. The small business impact analysis shows that the impact to small businesses operating sweat furnaces, and to small firms in the aluminum die casting and aluminum foundry industries is minimal.
- Regarding the commenters' third point, EPA considered the comments objecting to the costing methods and assumptions it used to estimate the impacts of the proposed rule. The EPA has reexamined its cost estimating procedures and believes that overall it has overstated the cost of the proposed rule. However, in view of the changes in the proposed rule and to incorporate revisions in the estimated number of affected area sources, EPA has updated its estimate of the cost of the rule (see Docket No. A–92–61). The revised cost of the rule is below the $100 million per year threshold, therefore, the rule is not a significant regulatory action as defined under Executive Order 12866.

IV. Summary of Changes Since Proposal

In response to comments received on the proposed rule and after further analysis, the following changes have been made:

Applicability. The applicability section has been clarified to distinguish the affected sources at major sources from those at area sources. Chip dryers and scrap shredders have been changed to "thermal chip dryers" and "aluminum scrap shredders" to more precisely define the type of equipment covered by the rule. A new secondary aluminum processing unit (SAPU) has been added to the list of affected sources; new group 1 furnaces and new

in-line fluxers have been removed from the list of affected sources but are covered as emission units within new SAPUs. This change enables simultaneously constructed new emission units to meet emission standards on an analogous basis to existing SAPUs and does not affect the required level of control or continuous compliance. Subject to certain limitations, manufacturers of aluminum die castings, aluminum foundries, and aluminum extruders have been exempted from the rule. The final rule contains explicit language exempting research and development equipment.

The final rule also gives States the discretion to defer the requirement for secondary aluminum production area sources to obtain a title V permit. This discretion may reduce the burden of the rule on both area sources and States, without decreasing control requirements or increasing emissions.

The EPA's authority for establishing the deferrals is section 502(a) of the CAA, which allows EPA to exempt non-major sources from the permitting requirement if EPA finds that compliance with title V is impracticable, infeasible, or unnecessarily burdensome on the sources. The General Provisions implementing section 112 of the CAA provide that unless EPA explicitly exempts or defers area sources subject to a NESHAP from the title V permitting requirement, they are subject to permitting (40 CFR section 63.1(c)(2)(iii)). As a result, under 40 CFR sections 70.3(b)(2), 71.3(b)(2), and 63.1(c)(2), we are to determine whether area sources will be required to obtain title V permits when we adopt the underlying NESHAP. The EPA has previously allowed permitting authorities to defer permit applications for area sources in a series of rulemakings (60 FR 29484, June 5, 1995; 61 FR 27785, June 3, 1996; and 64 FR 37683, July 13, 1999).

When EPA initially established the ability of permitting authorities to defer area sources from title V, the Agency stated that it would decide whether to adopt permanent exemptions by the time deferrals expired, and that it would continue to evaluate permitting authorities' implementation and enforcement of the NESHAP requirements for area sources not covered by title V permits, the likely benefit of permitting such sources, and the costs and other burdens on such sources associated with obtaining title V permits. Many permitting authorities are struggling to issue in a timely fashion initial title V permits to major sources and other sources that have been subject to the permitting requirements since the beginning of the program, and we are concerned about the impact on permitting authorities of subjecting area sources to the permit application deadlines. Therefore, to be consistent with the previously allowed deferrals of permit applications for area sources by permitting authorities, the most reasonable approach is to defer the requirement for title V permitting for area sources in the secondary aluminum production source category until December 9, 2004.

As a result, today's action defers the requirement for title V permitting for area sources in the secondary aluminum production source category until December 9, 2004. The deferral is not an automatic benefit provided to the sources. Rather, permitting authorities may exercise their discretion to either defer the area sources, or to require them to apply for and obtain part 70 permits. Some permitting authorities may decide that area sources in the subject source category warrant permitting mechanisms (such as the use of general permits or "permits by rule") that minimize the burden on both the permitting authoring and the source.

For area sources that are not covered by an effective approved part 70 program and are subject to the EPA-administered part 71 permitting program, today's action also defers those area sources subject to the secondary aluminum production NESHAP from permitting under part 71 until December 9, 2004.

Definitions. The definitions of clean charge, fluxing, reactive fluxing, aluminum scrap shredder, secondary aluminum processing unit, secondary aluminum production facility and thermal chip dryer have been revised and clarified to reflect the meanings intended at proposal. Definitions of internal runaround and cover flux have been added to the final rule.

Emission standards. In response to comments from the regulated community, a standard for new SAPUs has been included in the final rule. Also, for sweat furnace operations, the final rule provides an alternative to the emission standard that does not require emission testing. The alternative is expressed in terms of design and operating parameters of afterburners that ensure the emission limit will be achieved.

Operating requirements. The compliance date for SAPUs has been clarified. Lime addition requirements have been specified only for continuous lime injection systems. Lime addition requirements for intermittent lime addition have been eliminated because the MACT floor control technology, upon which the emission standards are based, includes continuous lime injection. Provisions for obtaining approval for intermittent lime addition and establishing operating requirements have been added to the rule.

Labeling requirements have been redefined to include only the emission unit or affected source identification and the applicable operating requirements and pollution prevention parameters. In addition, the applicability of the labeling requirement has been narrowed to specific affected sources and emission units.

The final rule allows the option to demonstrate compliance for specific affected sources on the basis of aluminum production as opposed to feed/charge. Owners or operators of SAPUs that choose to demonstrate compliance on the basis of aluminum production as opposed to feed/charge must account for aluminum production on an emission unit by emission unit basis. This option will provide additional flexibility for existing measurement equipment and will not increase HAP emissions. The inlet temperature limit has been eliminated for fabric filters that control only in-line fluxers because these fabric filters typically operate at near-ambient temperatures.

Monitoring requirements. The final rule includes options for permitting authority approval of measuring devices of alternative accuracy in cases where the use of devices of specified accuracy is not workable, such as measurement of very low chlorine flow rates. Additional options for ascertaining the free flow of lime, including the use of load cells, flow sensors and HCl concentration sensors, have been added to the final rule. Specific temperature monitoring relative accuracy and calibration drift requirements have been eliminated because they are not necessary. The requirements for scrap inspection plans have been made less prescriptive to allow for a wider range of situations as experienced in the secondary aluminum production industry. Procedures for obtaining approval of alternative site-specific monitoring practices have been included to increase flexibility.

Performance testing. The final rule eliminates the requirement for repeat performance testing at area sources for cost and economic reasons, but maintains the operating, maintenance, and monitoring (OM&M) plan requirement to ensure continuous compliance through monitoring of appropriate parameters. Sweat furnaces equipped with afterburners meeting required design specifications are not

subject to performance testing requirements in the final rule. The rule has also been changed to reduce the cost of performance testing by allowing owners or operators to conduct worst case performance tests on a single affected source or emission unit that is not equipped with an add-on control device to represent the performance of other sources of the same design and operating characteristics.

V. Summary of Impacts

In response to comments that EPA's assessment of impacts was not adequate, and as a result of revisions made to the rule to provide more flexibility to affected sources and to minimize the burden on area sources, EPA reanalyzed the impacts of the rule.

A. Air Quality Impacts

At the current level of control, emissions of HAPs and other pollutants are estimated to be approximately 28,700 Mg/yr (31,600 tpy). Of these emissions, 16,400 Mg/yr (18,100 tpy) are HAPs. The EPA estimates that implementation of the NESHAP will reduce all pollutants by 14,200 Mg/yr (15,600 tpy) and HAP emissions would be reduced by about 11,300 Mg/yr (12,400 tpy). Baseline emissions and emission reductions are summarized by pollutant in Table 1 below.

TABLE 1.—NATIONWIDE ANNUAL BASELINE EMISSIONS AND EMISSIONS REDUCTIONS

Pollutant	Baseline emissions (Mg/yr)	Emissions reduction (Mg/yr)	Baseline emissions (tpy)	Emissions reduction (tpy)
THC [1]	3,782	0	4,169	0
D/F	0.54 kg/yr	0.43 kg/yr	1.19 lb/yr	0.94 lb/yr
HCl	15,365	11,224	16,902	12,372
Cl_2	996	NQ [2]	1,098	NQ
POM	37	9	41	10
HAP Metals	58	36	64	40
PM	8,508	2,889	9,379	3,185
Total:				
HAPs	16,425	11,269	18,106	12,422
PM	8,508	2,889	9,379	3,185
HAPS and other pollutants	28,657	14,158	31,589	15,607

[1] THC is a surrogate for organic HAPs.
[2] NQ Not quantified due to lack of emissions data.

There are no THC emission reductions expected because all sources with a THC emission limit are already equipped with the technology representative of the MACT-level of control.

The estimated emissions reductions represent the minimum that will be achieved by the final rule since they are based on a reduction in baseline emissions to a level equal to the promulgated emission limit. In reality, if emission control equipment is installed to achieve compliance with the rule, emissions will likely be reduced to a level below the emission limit and the actual emissions reductions will be larger than the estimates. In addition, emissions reductions are also expected for other pollutants for which there are no specific emission limits. Although these potential emissions reductions were not quantified, emission controls installed to reduce HCl emissions are likely to also reduce Cl_2 emissions, the lime added or injected to fabric filters would reduce fluoride as well as chloride emissions, and fabric filters installed to meet PM emission limits also would reduce HAP metal and polycyclic organic matter (POM) emissions. For example, emission test data indicate that a fabric filter will reduce HAP metal emissions by approximately the same percentage as PM emissions. If the same reduction (61.4 percent from the baseline, taking into account that some sources already have these controls) is applied to HAP metal emissions, emission reductions of about 39.5 tpy from the estimated baseline level of 64.4 tpy would be achieved.

B. Economic Impacts

EPA revised the economic impact analysis (EIA) to consider revised estimates of costs due to changes in the requirements of the rule between proposal and promulgation as well as additional information received concerning potential impacts of the regulation to owners of sweat furnaces, aluminum die casting facilities, and aluminum foundries. Due to the number of facilities and variety of processes used in the affected industries, model plants were developed to categorize facilities based on possible combinations of processes that are performed. These model plant categories were used to estimate applicable emission control costs, including the costs of monitoring, reporting, and record keeping (MRR). Sixteen model plants were created and annual compliance costs were calculated for each.

Estimates of total capital and total annualized costs for each model plant and nationwide are shown in Table 2. Total nationwide annualized costs for this regulation are estimated at $76.7 million. The model plant (1–8) control cost estimates include control device costs, auxiliary equipment, and direct and indirect installation costs, but do not include monitoring costs. The nationwide annual costs include costs for monitoring, reporting, and record keeping estimated at $9.2 million annually. (All values are shown in 1994 dollars.)

TABLE 2.—ESTIMATED CAPITAL AND ANNUALIZED COSTS BY MODEL PLANT

[Thousands of 1994 dollars]

Model plants	Per facility		Nationwide	
	Capital costs	Annual costs	Capital costs	Annual costs
Model Plant 1	$805	$380	$24,960	$11,766
Model Plant 2	950	362	9,500	3,621
Model Plant 3	1,833	702	12,832	4,911
Model Plant 4	2,944	1,203	26,492	10,829
Model Plant 5	1,441	851	14,409	8,510
Model Plant 6	976	671	6,833	4,696
Model Plant 7	198	134	1,188	807
Model Plant 8	0	0	0	0
MRR for Model Plants 1–8				3,885
Sweat Furnace 1	0	0	0	133
Sweat Furnace 2	0	0	0	299
Sweat Furnace 3	9	24	9,167	23,489
Die Casting 1	0	4	0	46
Die Casting 2	0	4	0	364
Die Casting 3	0	4	0	241
Foundry 1	0	4	0	2,489
Foundry 2	0	4	0	622
Nationwide Total			105,381	76,708

Firms producing products in SIC codes 3341 Secondary Smelting and Refining of Nonferrous Metals, 3353 Aluminum Sheet, Plate, and Foil, 3334 Primary Aluminum Production, 3354 Aluminum Extruded Product Manufacturing, 3363 Aluminum Die-Casting, 3365 Aluminum Foundries, 4953 Refuse Systems, 5093 Scrap and Waste Materials, and 5015 Motor Vehicle Parts—Used may be affected by this regulation.

A market impact analysis was completed for secondary aluminum producing firms. Table 3 presents primary and secondary market impacts estimated for the secondary aluminum market. Primary market impacts include estimated changes in price, domestic production, industry revenues, and potential facility closures. Secondary market impacts relate to potential employment losses, decreases in exports, and increases in imports.

TABLE 3.—SECONDARY ALUMINUM PRODUCTION PRIMARY AND SECONDARY MARKET IMPACTS

	Estimated impacts
Primary Market Impacts:	
Price Increase (Percent)	0.64
Production Decrease (Percent)	[0.40]
Industry Revenues—Increase in Value of Domestic Shipments (Percent)	0.24
Potential Facility Closures	0–1*

TABLE 3.—SECONDARY ALUMINUM PRODUCTION PRIMARY AND SECONDARY MARKET IMPACTS—Continued

	Estimated impacts
Secondary Market Impacts:	
Labor Market	
Potential Employee Reductions:	
Number of workers	94
Percent decrease	[0.40]
International Trade:	
Import increase (Percent)	1.51
Export decrease (Percent)	[0.22]

Decreases are shown in brackets [ ].

*Firm or facility closures are unlikely. However, if one makes a number of worst case assumptions, one facility or firm closure is possible.

In general, the economic impacts of this regulation are expected to be minimal to the secondary aluminum industry with price increases and production decreases of less than one percent. A market price increase of 0.64 percent and domestic production decrease of 0.40 percent are predicted. Revenues or the value of domestic shipments for the industry are expected to increase by 0.24 percent. Individual facilities or firms within the industry may experience revenue increases or decreases, but on average the industry revenues are anticipated to increase slightly with this regulation. Facility or firm closures are unlikely to occur as a result of this regulation. However, if a number of worst case assumptions are made, one could conclude that a single facility may close as a result of the regulation.

Approximately 94 workers may face employment displacement as a result of the regulation. This job loss estimate results from the decrease in production expected to result from the regulation and does not consider any employment increases that may occur relative to emission control. Exports of secondary aluminum products to other countries are expected to decline by 0.22 percent while imports of secondary aluminum are expected to increase 1.51 percent.

Since the impact of the regulation is anticipated to be minimal to firms owning sweat furnaces, aluminum die casters, aluminum foundries, and secondary aluminum dross reclamation facilities (categorized as model plants 7 and 8), a streamlined economic impact analysis was completed for these markets. This analysis computes the estimated cost of the regulation as a percentage of annual revenues. The cost to sales ratio refers to the change in annualized control costs divided by the sales revenues of a particular good or goods being produced in the process for which additional pollution control is required. It can be estimated for either individual firms or as an average for some set of firms such as affected small firms. While it has different significance for different market situations, it is a good rough gauge of potential impact. If costs for the individual (or group) of firms are completely passed on to the purchasers of the good(s) being produced, it is an estimate of the price change (in percentage form after

multiplying the ratio by 100). If costs are completely absorbed by the producer, it is an estimate of changes in pretax profits (in percentage form after multiplying the ratio by 100). The distribution of costs to sales ratios across the whole market, the competitiveness of the market, and profit to sales ratios are among the obvious factors that may influence the significance of any particular cost to sales ratio for an individual facility. This analysis was completed on a model plant basis using estimated annual revenues and for a sample of firms using actual company revenue data. A cost to sales ratio of 3 percent or above is an indicator of the potential for significant economic impact for firms in the industries affected by this rule. The results of these analyses are shown in Table 4.

As shown in Table 4, the cost to sales ratios using both model plant data and actual facility data are substantially below one percent for aluminum die casters, aluminum foundries, and firms operating sweat furnaces. This indicates that firms in these industries are not likely to incur significant economic impacts as a result of this regulation.

TABLE 4.—COST TO SALES RATIOS FOR ALUMINUM DIE CASTING, ALUMINUM FOUNDRIES, FIRMS OWNING SWEAT FURNACES, AND FIRMS OWNING ALUMINUM DROSS RECLAMATION FACILITIES

Description	Cost to sales ratios (%)
Firms Operating Sweat Furnaces Model Plant Data:	
Sweat Furnace 1	0.16
Sweat Furnace 2	0.06
Sweat Furnace 3	0.08
Average Actual Firm Data	0.01
Aluminum Die Casting Model Plant Data:	
Model Plant 1	<0.01
Model Plant 2	0.01
Model Plant 3	0.04
Average Actual Firm Data	0.04
Aluminum Foundries Model Plant Data:	
Model Plant 1	0.16
Model Plant 2	0.04
Average Actual Firm Data	0.03
Secondary Aluminum Dross Reclamation Facilities for Model Plants 7 and 8 Model Plant Data:	
Model Plant 7	1.08
Model Plant 8	0.07
Average Actual Firm Data:	
Model Plant 7	0.73
Model Plant 8	0.18

Cost to sales ratios for secondary aluminum dross reclamation facilities (model plants 7 and 8) approximate or are less than one percent on a model plant and actual firm data basis. These firms are also not anticipated to incur significant economic impacts as a result of this regulation. For further information, please see Economic Impact For the Secondary Aluminum NESHAP, Final Report, October 1999.

C. Non-Air Health and Environmental Impacts

As discussed in the preamble to the proposed rule, the NESHAP is based on air pollution control systems which are of the dry type (*e.g.*, afterburners and fabric filters), and there are no water pollution impacts resulting from their use. Solid waste generated by fabric filters in the form of particulate matter (including HAP metals and lime from fabric filters) is typically disposed of by landfilling. With the addition of fabric filters and lime conditioned fabric filters, the amount of solid waste is expected to increase by about 97,904 Mg/yr (107,921 tpy) nationwide. The increase in solid waste is estimated as the sum of the annual reduction in PM emissions and the annual increase in the use of lime in lime-injected fabric filters.

Implementation of the NESHAP will aid in reducing aerial deposition of D/F and HAP metals (lead, cadmium, and mercury), will substantially reduce ambient concentrations of HCl and Cl_2, and will reduce emissions.

D. Energy Impacts

Operating fabric filters and afterburners require the use of electrical energy to operate fans that move the gas stream. The additional electrical energy requirements are estimated at 78 million kilowatt hours per year (kWh/yr), or 282 terajoules per year (TJ/yr), over current requirements. Afterburners may also use natural gas as fuel. Approximately 325,500 kilocubic feet per year (kft^3/yr) or 322 billion British thermal units (Btu)/yr (340 TJ/yr) of additional natural gas will be required.

The increased energy requirements for facilities will result in an increase in utility emissions as more energy is generated. Nationwide emissions of PM, sulfur dioxide (SO_2), and nitrogen oxides (NO_X) from electric power plants are estimated to increase by 8.1 Mg/yr (8.9 tpy), 323 Mg/yr (356 tpy), and 161 Mg/yr (178 tpy), respectively.

VI. Administrative Requirements

A. Congressional Review Act

The Congressional Review Act, 5 U.S.C. section 801 *et seq.*, as added by the Small Business Regulatory Enforcement Fairness Act of 1996, generally provides that before a rule may take effect, the agency promulgating the rule must submit a rule report, which includes a copy of the rule, to each House of the Congress and to the Comptroller General of the United States. The EPA will submit a report containing this rule and other required information to the U.S. Senate, the U.S. House of Representatives, and the Comptroller General of the United States prior to publication of the rule in the **Federal Register**. This rule is not a "major rule" as defined by 5 U.S.C. 804(2).

B. Executive Order 12866—Regulatory Planning and Review

Under Executive Order 12866 (58 FR 51735, October 4, 1993), the EPA must determine whether the regulatory action is "significant" and therefore subject to review by the Office of Management and Budget (OMB) and the requirements of the Executive Order. The Executive Order defines "significant regulatory action" as one that is likely to result in a rule that may:

(1) Have an annual effect on the economy of $100 million or more or adversely affect in a material way the economy, a sector of the economy, productivity, competition, jobs, the environment, public health or safety, or State, local, or tribal governments or communities;

(2) Create a serious inconsistency or otherwise interfere with an action taken or planned by another agency;

(3) Materially alter the budgetary impact of entitlements, grants, user fees, or loan programs, or the rights and obligation of recipients thereof; or

(4) Raise novel legal or policy issues arising out of legal mandates, the President's priorities, or the principles set forth in the Executive Order.

In response to comments that the rule as proposed would result in adverse impacts to sources in the secondary aluminum production industry as well as result in costs in excess of $100 million, EPA reexamined the cost of the rule. In view of the changes in the rule that have been made since proposal to clarify applicability as well as the requirements of the rule and to provide greater flexibility in the rule, EPA finds that the cost of the final rule is below $100 million. Because the projected annual costs (including monitoring) for this NESHAP are less than $100 million, a regulatory impact analysis has not been prepared. However, because of concerns expressed by affected facilities regarding the potential for adverse economic impacts, EPA submitted this

final regulation to OMB for review. Any written comments are included in the docket listed under **ADDRESSES**.

C. Executive Order 13045—Protection of Children From Environmental Health Risks and Safety Risks

Executive Order 13045 applies to any rule that EPA determines (1) is "economically significant" as defined under Executive Order 12866, and (2) the environmental health or safety risk addressed by the rule has a disproportionate effect on children. If the regulatory action meets both criteria, the Agency must evaluate the environmental health or safety effects of the planned rule on children and explain why the planned regulation is preferable to other potentially effective and reasonably feasible alternatives considered by the Agency.

This final rule is not subject to E.O. 13045 because it is not an economically significant regulatory action as defined by Executive Order 12866, and it does not address an environmental health or safety risk that would have a disproportionate effect on children.

D. Executive Order 13084—Consultation and Coordination With Indian Tribal Governments

Under Executive Order 13084, EPA may not issue a regulation that is not required by statute, that significantly or uniquely affects the communities of Indian tribal governments, and that imposes substantial direct compliance costs on those communities, unless the Federal government provides the funds necessary to pay the direct compliance costs incurred by the tribal governments, or EPA consults with those governments. If EPA complies by consulting, Executive Order 13084 requires EPA to provide to OMB, in a separately identified section of the preamble to the rule, a description of the extent of EPA's prior consultation with representatives of affected tribal governments, a summary of the nature of their concerns, and a statement supporting the need to issue the regulation. In addition, Executive Order 13084 requires EPA to develop an effective process permitting elected officials and other representatives of Indian tribal governments "to provide meaningful and timely input in the development of regulatory policies on matters that significantly or uniquely affect their communities."

Today's rule does not significantly or uniquely affect the communities of Indian tribal governments. Accordingly, the requirements of section 3(b) of Executive Order 13084 do not apply to this rule.

E. Executive Order 13132—Federalism

Executive Order 13132, entitled "Federalism" (64 FR 43255, August 10, 1999), requires EPA to develop an accountable process to ensure "meaningful and timely input by State and local officials in the development of regulatory policies that have federalism implications." "Policies that have federalism implications" is defined in the Executive Order to include regulations that have "substantial direct effects on the States, on the relationship between the national government and the States, or on the distribution of power and responsibilities among the various levels of government." Under Executive Order 13132, EPA may not issue a regulation that has federalism implications, that imposes substantial direct compliance costs, and that is not required by statute, unless the Federal government provides the funds necessary to pay the direct compliance costs incurred by State and local governments, or EPA consults with State and local officials early in the process of developing the proposed regulation. EPA also may not issue a regulation that has federalism implications and that preempts State law unless the Agency consults with State and local officials early in the process of developing the proposed regulation.

If EPA complies by consulting, Executive Order 13132 requires EPA to provide to the Office of Management and Budget (OMB), in a separately identified section of the preamble to the rule, a federalism summary impact statement (FSIS). The FSIS must include a description of the extent of EPA's prior consultation with State and local officials, a summary of the nature of their concerns and the agency's position supporting the need to issue the regulation, and a statement of the extent to which the concerns of State and local officials have been met. Also, when EPA transmits a draft final rule with federalism implications to OMB for review pursuant to Executive Order 12866, EPA must include a certification from the agency's Federalism Official stating that EPA has met the requirements of Executive Order 13132 in a meaningful and timely manner.

This final rule will not have substantial direct effects on the States, on the relationship between the national government and the States, or on the distribution of power and responsibilities among the various levels of government, as specified in Executive Order 13132. This determination has been made since none of the affected facilities under this final rule are owned or operated by State or local governments. Thus, the requirements of section 6 of the Executive Order do not apply to this rule. Although section 6 of Executive Order 13132 does not apply to this rule, EPA did consult with State and local officials in developing the proposed rule.

F. Unfunded Mandates Reform Act

Title II of the Unfunded Mandates Reform Act of 1995 (UMRA), Pub. L. 104–4, establishes requirements for Federal agencies to assess the effects of their regulatory actions on State, local, and tribal governments and the private sector. Under section 202 of the UMRA, the EPA generally must prepare a written statement, including a cost-benefit analysis, for proposed and final rules with "Federal mandates" that may result in expenditures to State, local, and tribal governments, in the aggregate, or to the private sector, of $100 million or more in any 1 year. Before promulgating an EPA rule for which a written statement is needed, section 205 of the UMRA generally requires the EPA to identify and consider a reasonable number of regulatory alternatives and adopt the least costly, most cost-effective or least burdensome alternative that achieves the objectives of the rule. The provisions of section 205 do not apply when they are inconsistent with applicable law. Moreover, section 205 allows the EPA to adopt an alternative other than the least costly, most cost-effective, or least burdensome alternative if the Administrator publishes with the final rule an explanation why that alternative was not adopted. Before the EPA establishes any regulatory requirements that may significantly or uniquely affect small governments, including tribal governments, it must have developed under section 203 of the UMRA a small government agency plan. The plan must provide for notifying potentially affected small governments, enabling officials of affected small governments to have meaningful and timely input in the development of EPA regulatory proposals with significant Federal intergovernmental mandates, and informing, educating, and advising small governments on compliance with the regulatory requirements.

The EPA has determined that this rule does not contain a Federal mandate that may result in expenditures of $100 million or more for State, local, and tribal governments, in aggregate, or the private sector in any 1 year, nor does the rule significantly or uniquely impact small governments because it contains no requirements that apply to such

governments or impose obligations upon them. Thus, the requirements of the UMRA do not apply to this rule.

G. Regulatory Flexibility Act

The EPA analyzed the potential impact of the proposed rule on small entities. The results of the analysis for the proposed rule and the method used by EPA to perform the analysis of impacts on small entities are discussed in the preamble to the proposed rule (64 FR 6946, February 11, 1999).

In response to comments on the proposed rule that EPA understated the number of small businesses that would be affected by the rule, EPA refined its small business impacts analysis to include information concerning sweat furnaces, aluminum die casting facilities, and aluminum foundries. The EPA has determined that it is not necessary to prepare a regulatory flexibility analysis in connection with this final rule. Based on the revised small business impacts analysis prepared concerning this final rule, EPA has also determined that the requirements in this rule will not have a significant impact on a substantial number of small entities.

The regulation will potentially impact firms producing products in SIC codes 3341 (secondary smelting and refining of nonferrous metals), 3353 (aluminum sheet, plate, and foil), 3334 (primary aluminum production), 3354 (aluminum extruded products), 3363 (aluminum die-casting), 3365 (aluminum foundries), 4953 (refuse systems—materials recovery facilities), 5093 (scrap and waste materials), and 5015 (motor vehicle parts-used). The Small Business Administration criteria for each affected industry are shown in Table 5.

TABLE 5.—SECONDARY ALUMINUM NESHAP AFFECTED INDUSTRIES AND SMALL BUSINESS CRITERIA

Standard industrial classification code	Small business criteria
3341 Secondary Smelting and Refining of Nonferrous Metals.	Less than 500 employees.
3353 Aluminum Sheet, Plate, and Foil.	Less than 750 employees.
3334 Primary Aluminum Production.	Less than 1,000 employees.
3354 Aluminum Extruded Products.	Less than 750 employees.
3363 Aluminum Die-Casting.	Less than 500 employees.
3365 Aluminum Foundries.	Less than 500 employees.

TABLE 5.—SECONDARY ALUMINUM NESHAP AFFECTED INDUSTRIES AND SMALL BUSINESS CRITERIA—Continued

Standard industrial classification code	Small business criteria
4953 Refuse Systems.	Less than $6 million in annual sales revenues.
5093 Scrap and Waste Materials.	Less than 100 employees.
5015 Motor Vehicle Parts—Used.	Less than 100 employees.

The EPA received responses to an information collection request from 135 secondary aluminum facilities producing products in SIC 3334, 3341, 3353 and 3355. To define the small business entities, the 135 facilities were matched with their parent companies. It was determined that 32 of these companies employ less than 750 employees and meet the Small Business Administration's definition of a small business entity. (Note the criterion of 750 employees was used for secondary aluminum producers, because it results in a larger number of small businesses. None of the affected firms in the data base producing principally primary aluminum products in SIC 3334 are small businesses.)

There are 320 aluminum die casting companies and approximately 1530 aluminum foundries currently operating domestically. The vast majority of these firms are small businesses employing less than 500 employees. No small businesses within aluminum die casting companies or aluminum foundries have been specifically identified that are impacted by the final rule under applicability as defined. Only large businesses have come forward with information regarding applicability of the standard(s) to their operations. Based on that information, we have performed a small business analysis based on a probable over estimate of the number of small businesses within these industry sectors that may be affected by the final rule. (Docket A–92–61).

It is estimated that around 1650 sweat furnaces are operated by businesses in the United States that will be subject to this rule. Firms owning sweat furnaces are primarily small businesses.

The analysis of small business impacts for these industries focused on a comparison of compliance costs as a percentage of sales (cost/sales ratio). When available, the analysis used actual firm sales data. However, actual firm data were unavailable for a number of small businesses. To estimate the impact for such firms, an analysis comparing model plant control cost estimates to model plant revenue data was conducted. As Table 6 shows, cost to sales ratios based on model plant revenue and cost data yield ratios of less than 1 percent for all model plants other than model plant 7. The cost to sales ratio for model plant 7 is 1.08 percent. For the affected industries, cost to sales ratios of 3 percent or greater are considered an indicator of the potential for significant economic impact. Based upon this criterion, the model plant analysis indicates that small business firms are not likely to experience significant economic impacts as a result of this regulation.

TABLE 6.—SECONDARY ALUMINUM NESHAP COST TO SALES RATIOS ASSUMING MODEL PLANT COST AND REVENUE DATA

Model plant	Model plant cost to sales ratio (percent)
1	0.70
2	0.35
3	0.82
4	0.71
5	0.13
6	0.07
7	1.08
8	0.07
Sweat Furnace 1	0.16
Sweat Furnace 2	0.06
Sweat Furnace 3	0.08
Die Casting 1	<0.01
Die Casting 2	0.01
Die Casting 3	0.04
Foundry 1	0.16
Foundry 2	0.04

A search for actual company revenue data for small businesses was completed. Data were located for 26 of the 32 small secondary aluminum firms (model plants 1–6) and aluminum dross fabricators (model plants 7 and 8) identified by the survey. Data were also collected for 53 small die casting firms, 22 small aluminum foundries, and for 65 small business that may potentially operate sweat furnaces. A summary of the cost to sales ratios for the small secondary aluminum producers using actual company sales data is shown in Table 7 below.

TABLE 7.—SECONDARY ALUMINUM NESHAP COMPANY SPECIFIC COST TO SALES RATIOS FOR AFFECTED SMALL BUSINESSES

Cost/sales ratio	Number of small companies in each cost to sales range
Secondary Aluminum Industry:	
0.00%–0.99%	19
1.00%–1.99%	5
2.00%–2.99%	2
Mean cost to sales ratio=0.74%	Total firms=26

Mean cost to sales ratio	Number of small companies evaluated (firms)
Aluminum Die Casting Industry: 0.04%	53
Aluminum Foundry Industry: 0.04%	22
Firms Owning Sweat Furnaces: 0.01%	65

As depicted in Table 7, the majority of small businesses modeled are anticipated to experience cost to sales ratios below 1 percent. Seven small companies show cost to sales ratios above 1 percent, but less than 3 percent. Since no company exhibits cost to sales above 3 percent and the majority of small businesses are expected to incur cost to sales ratios less than 1 percent, significant impacts to small entities are not expected. The results of the analyses conducted using both model plant data and actual small business firm data indicate that impacts from this regulation are not likely to be significant to small business firms. As previously stated, the analysis is based on a probable over estimate of the number of small businesses within these industry sectors that may be affected by the final rule. The EPA concludes that this regulation will not result in a significant economic impact for a substantial number of small entities. For more detailed information, please see Economic Impact Analysis for the Secondary Aluminum NESHAP Final Report, October 1999.

H. Paperwork Reduction Act

The information collection requirements in this final rule are being submitted for approval to OMB under the requirements of the Paperwork Reduction Act, 44 U.S.C. 3501 *et seq.* An Information Collection Request (ICR) document has been prepared by EPA (ICR No. 1894.01), and a copy may be obtained from Sandy Farmer, OPPE Regulatory Division, U.S. Environmental Protection Agency (2136), 401 M Street SW, Washington, DC 20460, or by calling (202) 260–2740.

The promulgated information requirements include mandatory notifications, records, and reports required by the NESHAP General Provisions (40 CFR part 63, subpart A). These information requirements are needed to confirm the compliance status of major sources, to identify any nonmajor sources not subject to the standards and any new or reconstructed sources subject to the standards, to confirm that emission control devices are being properly operated and maintained, and to ensure that the standards are being achieved. Based on the recorded and reported information, EPA can decide which facilities, records, or processes should be inspected. These recordkeeping and reporting requirements are specifically authorized under section 114 of the CAA (42 U.S.C. 7414). All information submitted to EPA for which a claim of confidentiality is made will be safeguarded according to Agency policies in 40 CFR part 2, subpart B. (See 41 FR 36902, September 1, 1976; 43 FR 39999, September 28, 1978; 43 FR 42251, September 28, 1978; and 44 FR 17674, March 23, 1979.)

The EPA is required under section 112(d) of the Clean Air Act to regulate emissions of HAPs listed in section 112(b). The requested information is needed as part of the overall compliance and enforcement program. The ICR requires that secondary aluminum production facilities retain records of parameter and emissions monitoring data at facilities for a period of 5 years, which is consistent with the General Provisions to 40 CFR part 63 and the permit requirements under 40 CFR part 70. All major sources subject to this rule will be required to obtain operating permits either through the State-approved permitting program or, if one does not exist, in accordance with the provisions of 40 CFR part 71. Under this final rule, the approved state permitting program has the option to defer the requirement to obtain a title V permit for area sources affected by this rule.

The annual public reporting and recordkeeping burden for this collection of information (averaged over the first 3 years after the effective date of the rule) is estimated to total 148,000 labor hours per year at a total annual cost of $9.2 million. This estimate includes notifications; a performance test (with repeat tests for major sources); one-time preparation of a startup, shutdown, and malfunction plan with semiannual reports of any event where the procedures in the plan were not followed and an operation, maintenance, and monitoring plan; semiannual excess emissions reports; initial and semiannual furnace certifications; and recordkeeping. This estimate also includes one time preparation of emissions averaging plans and scrap sampling plans for some respondents. Total capital costs associated with monitoring requirements over the 3-year period of the ICR is estimated at $1.3 million; this estimate includes the capital and startup costs associated with installation of monitoring equipment.

Burden means the total time, effort, or financial resources expended by persons to generate, maintain, retain, or disclose or provide information to or for a Federal agency. This includes the time needed to review instructions; develop, acquire, install, and utilize technology and systems for the purpose of collecting, validating, and verifying information; process and maintain information and disclose and provide information; adjust the existing ways to comply with any previously applicable instructions and requirements; train personnel to respond to a collection of information; search existing data sources; complete and review the collection of information; and transmit or otherwise disclose the information.

An Agency may not conduct or sponsor, and a person is not required to respond to a collection of information unless it displays a currently valid OMB control number. The OMB control numbers for EPA's regulations are listed in 40 CFR part 9 and 48 CFR chapter 15.

I. National Technology Transfer and Advancement Act

Under section 12(d) of the National Technology Transfer and Advancement Act (NTTAA), the Agency is required to use voluntary consensus standards in its regulatory and procurement activities unless to do so would be inconsistent with applicable law or otherwise impracticable. Voluntary consensus standards are technical standards (*e.g.*, materials specifications, test methods, sampling procedures, and business practices) which are developed or adopted by voluntary consensus bodies. Where available and potentially applicable voluntary consensus standards are not used by EPA, the CAA requires the Agency to provide Congress, through OMB, an explanation of the reasons for not using such standards. This section summarizes the EPA's response to the requirements of the NTTAA for the analytical test methods included in the final rule.

Consistent with the NTTAA, the EPA conducted a search to identify voluntary

consensus standards. However, no candidate consensus standards were identified for measuring emissions of the HAPs or surrogates subject to emission standards in the rule. The rule requires standard EPA methods well known to the industry and States. Approved alternative methods also may be used. The EPA, in coordination with the industry and States, have agreed on the use of these test methods in the rule.

List of Subjects in 40 CFR Part 63

Environmental protection, Air pollution control, Hazardous substances, Incorporation by reference, Reporting and recordkeeping requirements, Secondary aluminum production.

Dated: December 15, 1999.

Carol M. Browner,

Administrator.

For the reasons set out in the preamble, part 63 of title 40, chapter I, of the Code of Federal Regulations is amended as follows:

PART 63—NATIONAL EMISSION STANDARDS FOR HAZARDOUS AIR POLLUTANTS FOR SOURCE CATEGORIES

1. The authority citation for part 63 continues to read as follows:

Authority: 42 U.S.C. 7401 *et seq.*

2. Part 63 is amended by adding subpart RRR to read as follows:

Subpart RRR—National Emission Standards for Hazardous Air Pollutants for Secondary Aluminum Production

Sec.

General

63.1500 Applicability.
63.1501 Dates.
63.1502 Incorporation by reference.
63.1503 Definitions.
63.1504 [Reserved]

Emission Standards and Operating Requirements

63.1505 Emission standards for affected sources and emission nits.
63.1506 Operating requirements.
63.1507–63.1509 [Reserved]

Monitoring and Compliance Provisions

63.1510 Monitoring requirements.
63.1511 Performance test/compliance demonstration general requirements.
63.1512 Performance test/compliance demonstration requirements and procedures.
63.1513 Equations for determining compliance.
63.1514 [Reserved]

Notifications, Reports, And Records

63.1515 Notifications.
63.1516 Reports.
63.1517 Records.

Other

63.1518 Applicability of general provisions.
63.1519 Delegation of authority.
63.1520 [Reserved]

Table 1 to Subpart RRR—Emission Standards for New and Existing Affected Sources

Table 2 to Subpart RRR—Summary of Operating Requirements for New and Existing Affected Sources and Emission Units

Table 3 to Subpart RRR—Summary of Monitoring Requirements for New and Existing Affected Sources and Emission Units Appendix A to Subpart RRR—General Provisions Applicability to Subpart RRR

General

§ 63.1500 Applicability.

(a) The requirements of this subpart apply to the owner or operator of each secondary aluminum production facility.

(b) The requirements of this subpart apply to the following affected sources, located at a secondary aluminum production facility that is a major source of hazardous air pollutants (HAPs) as defined in § 63.2:

(1) Each new and existing aluminum scrap shredder;

(2) Each new and existing thermal chip dryer;

(3) Each new and existing scrap dryer/delacquering kiln/decoating kiln;

(4) Each new and existing group 2 furnace;

(5) Each new and existing sweat furnace;

(6) Each new and existing dross-only furnace;

(7) Each new and existing rotary dross cooler; and

(8) Each new and existing secondary aluminum processing unit.

(c) The requirements of this subpart pertaining to dioxin and furan (D/F) emissions and associated operating, monitoring, reporting and recordkeeping requirements apply to the following affected sources, located at a secondary aluminum production facility that is an area source of HAPs as defined in § 63.2:

(1) Each new and existing thermal chip dryer;

(2) Each new and existing scrap dryer/delacquering kiln/decoating kiln;

(3) Each new and existing sweat furnace;

(4) Each new and existing secondary aluminum processing unit, containing one or more group 1 furnace emission units processing other than clean charge.

(d) The requirements of this subpart do not apply to manufacturers of aluminum die castings, aluminum foundries, or aluminum extruders that melt no materials other than clean charge and materials generated within the facility; and that also do not operate a thermal chip dryer, sweat furnace or scrap dryer/delacquering kiln/decoating kiln.

(e) The requirements of this subpart do not apply to facilities and equipment used for research and development that are not used to produce a saleable product.

(f) The owner or operator of a secondary aluminum production facility subject to the provisions of this subpart, is subject to the title V permitting requirements under 40 CFR parts 70 and 71, as applicable. The permitting authority may defer the affected facility from the title V permitting requirements until December 9, 2004, if the secondary aluminum production facility is not a major source and is not located at a major source as defined under 40 CFR 63.2, 70.2, or 71.2, and is not otherwise required to obtain a title V permit. If an affected facility receives a deferral from title V permitting requirements under this section, the source must submit a title V permit application by December 9, 2005. The affected facility must continue to comply with the provisions of this subpart applicable to area sources, even if a deferral from title V permitting requirements has been granted to the facility by the permitting authority.

§ 63.1501 Dates.

(a) The owner or operator of an existing affected source must comply with the requirements of this subpart by March 24, 2003.

(b) The owner or operator of a new affected source that commences construction or reconstruction after February 11, 1999 must comply with the requirements of this subpart by March 23, 2000 or upon startup, whichever is later.

§ 63.1502 Incorporation by reference.

(a) The following material is incorporated by reference in the corresponding sections noted. The incorporation by reference (IBR) of certain publications listed in the rule will be approved by the Director of the Office of the Federal Register as of the date of publication of the final rule in accordance with 5 U.S.C. 552(a) and 1 CFR part 51. This material is incorporated as it exists on the date of approval: (1) Chapters 3 and 5 of "Industrial Ventilation: A Manual of Recommended Practice," American Conference of Governmental Industrial Hygienists, (23rd edition, 1998), IBR approved for § 63.1506(c), and (2)

"Interim Procedures for Estimating Risks Associated with Exposures to Mixtures of Chlorinated Dibenzo-p-Dioxins and -Dibenzofurans (CDDs and CDFs) and 1989 Update" (EPA/625/3-89/016).

(b) The material incorporated by reference is available for inspection at the Office of the Federal Register, 800 North Capitol Street NW, Suite 700, Washington, DC; and at the Air and Radiation Docket and Information Center, U.S. EPA, 401 M Street SW, Washington, DC. The material is also available for purchase from the following addresses:

(1) Customer Service Department, American Conference of Governmental Industrial Hygienists (ACGIH), 1330 Kemper Meadow Drive, Cincinnati, OH 45240-1634, telephone number (513) 742-2020; and

(2) The National Technical Information Service (NTIS), 5285 Port Royal Road, Springfield, VA, NTIS no. PB 90-145756.

§ 63.1503 Definitions.

Terms used in this subpart are defined in the Clean Air Act as amended (CAA), in § 63.2, or in this section as follows:

Add-on air pollution control device means equipment installed on a process vent that reduces the quantity of a pollutant that is emitted to the air.

Afterburner means an air pollution control device that uses controlled flame combustion to convert combustible materials to noncombustible gases; also known as an incinerator or a thermal oxidizer.

Aluminum scrap shredder means a unit that crushes, grinds, or breaks aluminum scrap into a more uniform size prior to processing or charging to a *scrap dryer/delacquering kiln/decoating kiln*, or furnace. A bale breaker is not an *aluminum scrap shredder*.

Bag leak detection system means an instrument that is capable of monitoring particulate matter loadings in the exhaust of a fabric filter (*i.e.*, baghouse) in order to detect bag failures. A *bag leak detection system* includes, but is not limited to, an instrument that operates on triboelectric, light scattering, light transmittance, or other effect to monitor relative particulate matter loadings.

Chips means small, uniformly-sized, unpainted pieces of aluminum scrap, typically below 1¼ inches in any dimension, primarily generated by turning, milling, boring, and machining of aluminum parts.

Clean charge means furnace charge materials including molten aluminum; T-bar; sow; ingot; billet; pig; alloying elements; uncoated/unpainted thermally dried aluminum chips; aluminum scrap dried at 343 °C (650 °F) or higher; aluminum scrap delacquered/decoated at 482 °C (900 °F) or higher; other oil- and lubricant-free unpainted/uncoated gates and risers; oil-and lubricant-free unpainted/uncoated aluminum scrap, shapes, or products (*e.g.*, pistons) that have not undergone any process (*e.g.*, machining, coating, painting, etc.) that would cause contamination of the aluminum (with oils, lubricants, coatings, or paints); and internal runaround.

Cover flux means salt added to the surface of molten aluminum in a group 1 or group 2 furnace, without agitation of the molten aluminum, for the purpose of preventing oxidation.

D/F means dioxins and furans.

Dioxins and furans means tetra-, penta-, hexa-, and octachlorinated dibenzo dioxins and furans.

Dross means the slags and skimmings from aluminum melting and refining operations consisting of fluxing agent(s), impurities, and/or oxidized and non-oxidized aluminum, from scrap aluminum charged into the furnace.

Dross-only furnace means a furnace, typically of rotary barrel design, dedicated to the reclamation of aluminum from dross formed during melting, holding, fluxing, or alloying operations carried out in other process units. Dross and salt flux are the sole feedstocks to this type of furnace.

Emission unit means a *group 1 furnace* or *in-line fluxer* at a *secondary aluminum production facility*.

Fabric filter means an add-on air pollution control device used to capture particulate matter by filtering gas streams through filter media; also known as a baghouse.

Feed/charge means, for a furnace or other process unit that operates in batch mode, the total weight of material (including molten aluminum, T-bar, sow, ingot, etc.) and alloying agents that enter the furnace during an operating cycle. For a furnace or other process unit that operates continuously, *feed/charge* means the weight of material (including molten aluminum, T-bar, sow, ingot, etc.) and alloying agents that enter the process unit within a specified time period (*e.g.*, a time period equal to the performance test period). The *feed/charge* for a dross only furnace includes the total weight of dross and solid flux.

Fluxing means refining of molten aluminum to improve product quality, achieve product specifications, or reduce material loss, including the addition of solvents to remove impurities (solvent flux); and the injection of gases such as chlorine, or chlorine mixtures, to remove magnesium (demagging) or hydrogen bubbles (degassing). *Fluxing* may be performed in the furnace or outside the furnace by an *in-line fluxer*.

Furnace hearth means the combustion zone of a furnace in which the molten metal is contained.

Group 1 furnace means a furnace of any design that melts, holds, or processes aluminum that contains paint, lubricants, coatings, or other foreign materials with or without reactive fluxing, or processes *clean charge with reactive fluxing*.

Group 2 furnace means a furnace of any design that melts, holds, or processes only *clean charge* and that performs no *fluxing* or performs *fluxing* using only nonreactive, non-HAP-containing/non-HAP-generating gases or agents.

HCl means, for the purposes of this subpart, emissions of hydrogen chloride that serve as a surrogate measure of the total emissions of the HAPs hydrogen chloride, hydrogen fluoride and chlorine.

In-line fluxer means a device exterior to a furnace, located in a transfer line from a furnace, used to refine (flux) molten aluminum; also known as a flux box, degassing box, or demagging box.

Internal runaround means scrap material generated on-site by aluminum extruding, rolling, scalping, forging, forming/stamping, cutting, and trimming operations that do not contain paint or solid coatings. Aluminum chips generated by turning, boring, milling, and similar machining operations that have not been dried at 343 °C (650 °F) or higher, or by an equivalent non-thermal drying process, are not considered internal runaround.

Lime means calcium oxide or other alkaline reagent.

Lime-injection means the continuous addition of lime upstream of a *fabric filter*.

Melting/holding furnace, or melter/holder, means a *group 1 furnace* that processes only *clean charge*, performs melting, holding, and fluxing functions, and does not transfer molten aluminum to or from another furnace.

Operating cycle means for a batch process, the period beginning when the feed material is first charged to the operation and ending when all feed material charged to the operation has been processed. For a batch melting or holding furnace process, *operating cycle* means the period including the charging and melting of scrap aluminum and the fluxing, refining, alloying, and tapping of molten aluminum (the period from tap-to-tap).

PM means, for the purposes of this subpart, emissions of particulate matter that serve as a measure of total particulate emissions and as a surrogate for metal HAPs contained in the particulates, including but not limited to, antimony, arsenic, beryllium, cadmium, chromium, cobalt, lead, manganese, mercury, nickel, and selenium.

Pollution prevention means source reduction as defined under the Pollution Prevention Act of 1990 (*e.g.*, equipment or technology modifications, process or procedure modifications, reformulation or redesign of products, substitution of raw materials, and improvements in housekeeping, maintenance, training, or inventory control), and other practices that reduce or eliminate the creation of pollutants through increased efficiency in the use of raw materials, energy, water, or other resources, or protection of natural resources by conservation.

Reactive fluxing means the use of any gas, liquid, or solid flux (other than cover flux) that results in a HAP emission. Argon and nitrogen are not reactive and do not produce HAPs.

Reconstruction means the replacement of components of an affected source or *emission unit* such that the fixed capital cost of the new components exceeds 50 percent of the fixed capital cost that would be required to construct a comparable new affected source, and it is technologically and economically feasible for the reconstructed source to meet relevant standard(s) established in this subpart. Replacement of the refractory in a furnace is routine maintenance and is not a *reconstruction*. The repair and replacement of *in-line fluxer* components (*e.g.*, rotors/shafts, burner tubes, refractory, warped steel) is considered to be routine maintenance and is not considered a *reconstruction*. *In-line fluxers* are typically removed to a maintenance/repair area and are replaced with repaired units. The replacement of an existing *in-line fluxer* with a repaired unit is not considered a *reconstruction*.

Residence time means, for an *afterburner*, the duration of time required for gases to pass through the *afterburner* combustion zone. *Residence time* is calculated by dividing the *afterburner* combustion zone volume in cubic feet by the volumetric flow rate of the gas stream in actual cubic feet per second.

Rotary dross cooler means a water-cooled rotary barrel device that accelerates cooling of dross.

Scrap dryer/delacquering kiln/decoating kiln means a unit used primarily to remove various organic contaminants such as oil, paint, lacquer, ink, plastic, and/or rubber from aluminum scrap (including used beverage containers) prior to melting.

Secondary aluminum processing unit (SAPU): an existing SAPU means all existing *group 1 furnaces* and all existing *in-line fluxers* within a *secondary aluminum production facility*. Each existing *group 1 furnace* or existing *in-line fluxer* is considered an *emission unit* within a *secondary aluminum processing unit*. A new *SAPU* means any combination of *group 1 furnaces* and *in-line fluxers* which are simultaneously constructed after February 11, 1999. Each of the *group 1 furnaces* or *in-line fluxers* within a new *SAPU* is considered an *emission unit* within that *secondary aluminum processing unit*.

Secondary aluminum production facility means any establishment using clean charge, post-consumer aluminum scrap, aluminum scrap, aluminum ingots, aluminum foundry returns, dross from aluminum production, or molten aluminum as the raw material and performing one or more of the following processes: scrap shredding, scrap drying/delacquering/decoating, thermal chip drying, furnace operations (*i.e.*, melting, holding, refining, fluxing, or alloying), in-line fluxing, or dross cooling. A *secondary aluminum production facility* may be independent or part of a primary aluminum production facility. A facility is a *secondary aluminum production facility* if it includes any of the affected sources listed in § 63.1500(b) or (c). Aluminum die casting facilities, aluminum foundries and aluminum extrusion facilities that process no materials other than materials generated within the facility, or clean charge purchased or otherwise obtained from outside the facility, and that do not operate sweat furnaces, thermal chip dryers, or scrap dryers/delacquering kilns/decoating kilns are not secondary aluminum production facilities.

Sidewell means an open well adjacent to the hearth of a furnace with connecting arches between the hearth and the open well through which molten aluminum is circulated between the hearth, where heat is applied by burners, and the open well, which is used for charging scrap and solid flux or salt to the furnace, injecting fluxing agents, and skimming dross.

Sweat furnace means a furnace used exclusively to reclaim aluminum from scrap that contains substantial quantities of iron by using heat to separate the low-melting point aluminum from the scrap while the higher melting-point iron remains in solid form.

TEQ means the international method of expressing toxicity equivalents for dioxins and furans as defined in "Interim Procedures for Estimating Risks Associated with Exposures to Mixtures of Chlorinated Dibenzo-p-Dioxins and -Dibenzofurans (CDDs and CDFs) and 1989 Update" (EPA–625/3–89–016), available from the National Technical Information Service (NTIS), 5285 Port Royal Road, Springfield, Virginia 22161, NTIS no. PB 90–145756.

THC means, for the purposes of this subpart, total hydrocarbon emissions that also serve as a surrogate for the emissions of organic HAP compounds.

Thermal chip dryer means a device that uses heat to evaporate water, oil, or oil/water mixtures from unpainted/uncoated aluminum chips.

Three-day, 24-hour rolling average means daily calculations of the average 24-hour emission rate (lbs/ton of feed/charge), over the 3 most recent consecutive 24-hour periods, for a *secondary aluminum processing unit*.

Total reactive chlorine flux injection rate means the sum of the total weight of chlorine in the gaseous or liquid reactive flux and the total weight of chlorine in the solid reactive chloride flux, divided by the total weight of feed/charge, as determined by the procedure in § 63.1512(o).

§ 63.1504 [Reserved]

Emission Standards and Operating Requirements

§ 63.1505 Emission standards for affected sources and emission units.

(a) *Summary*. The owner or operator of a new or existing affected source must comply with each applicable limit in this section. Table 1 to this subpart summarizes the emission standards for each type of source.

(b) *Aluminum scrap shredder*. On and after the date the initial performance test is conducted or required to be conducted, whichever date is earlier, the owner or operator of an aluminum scrap shredder at a secondary aluminum production facility that is a major source must not discharge or cause to be discharged to the atmosphere:

(1) Emissions in excess of 0.023 grams (g) of PM per dry standard cubic meter (dscm) (0.010 grain (gr) of PM per dry standard cubic foot (dscf)); and

(2) Visible emissions (VE) in excess of 10 percent opacity from any PM add-on air pollution control device if a continuous opacity monitor (COM) or visible emissions monitoring is chosen as the monitoring option.

(c) *Thermal chip dryer.* On and after the date the initial performance test is conducted or required to be conducted, whichever date is earlier, the owner or operator of a thermal chip dryer must not discharge or cause to be discharged to the atmosphere emissions in excess of:

(1) 0.40 kilogram (kg) of THC, as propane, per megagram (Mg) (0.80 lb of THC, as propane, per ton) of feed/charge from a thermal chip dryer at a secondary aluminum production facility that is a major source; and

(2) 2.50 micrograms (μg) of D/F TEQ per Mg (3.5×10^{-5} gr per ton) of feed/charge from a thermal chip dryer at a secondary aluminum production facility that is a major or area source.

(d) *Scrap dryer/delacquering kiln/decoating kiln.* On and after the date the initial performance test is conducted or required to be conducted, whichever date is earlier:

(1) The owner or operator of a scrap dryer/delacquering kiln/decoating kiln must not discharge or cause to be discharged to the atmosphere emissions in excess of:

(i) 0.03 kg of THC, as propane, per Mg (0.06 lb of THC, as propane, per ton) of feed/charge from a scrap dryer/delacquering kiln/decoating kiln at a secondary aluminum production facility that is a major source;

(ii) 0.04 kg of PM per Mg (0.08 lb per ton) of feed/charge from a scrap dryer/delacquering kiln/decoating kiln at a secondary aluminum production facility that is a major source;

(iii) 0.25 μg of D/F TEQ per Mg (3.5×10^{-6} gr of D/F TEQ per ton) of feed/charge from a scrap dryer/delacquering kiln/decoating kiln at a secondary aluminum production facility that is a major or area source; and

(iv) 0.40 kg of HCl per Mg (0.80 lb per ton) of feed/charge from a scrap dryer/delacquering kiln/decoating kiln at a secondary aluminum production facility that is a major source.

(2) The owner or operator of a scrap dryer/delacquering kiln/decoating kiln at a secondary aluminum production facility that is a major source must not discharge or cause to be discharged to the atmosphere visible emissions in excess of 10 percent opacity from any PM add-on air pollution control device if a COM is chosen as the monitoring option.

(e) *Scrap dryer/delacquering kiln/decoating kiln: alternative limits.* The owner or operator of a scrap dryer/delacquering kiln/decoating kiln may choose to comply with the emission limits in this paragraph as an alternative to the limits in paragraph (d) of this section if the scrap dryer/delacquering kiln/decoating kiln is equipped with an afterburner having a design residence time of at least 1 second and the afterburner is operated at a temperature of at least 750 °C (1400 °F) at all times. On and after the date the initial performance test is conducted or required to be conducted, whichever date is earlier:

(1) The owner or operator of a scrap dryer/delacquering kiln/decoating kiln must not discharge or cause to be discharged to the atmosphere emissions in excess of:

(i) 0.10 kg of THC, as propane, per Mg (0.20 lb of THC, as propane, per ton) of feed/charge from a scrap dryer/delacquering kiln/decoating kiln at a secondary aluminum production facility that is a major source;

(ii) 0.15 kg of PM per Mg (0.30 lb per ton) of feed/charge from a scrap dryer/delacquering kiln/decoating kiln at a secondary aluminum production facility that is a major source;

(iii) 5.0 μg of D/F TEQ per Mg (7.0×10^{-5} gr of D/F TEQ per ton) of feed/charge from a scrap dryer/delacquering kiln/decoating kiln at a secondary aluminum production facility that is a major or area source; and

(iv) 0.75 kg of HCl per Mg (1.50 lb per ton) of feed/charge from a scrap dryer/delacquering kiln/decoating kiln at a secondary aluminum production facility that is a major source.

(2) The owner or operator of a scrap dryer/ delacquering kiln/decoating kiln at a secondary aluminum production facility that is a major source must not discharge or cause to be discharged to the atmosphere visible emissions in excess of 10 percent opacity from any PM add-on air pollution control device if a COM is chosen as the monitoring option.

(f) *Sweat furnace.* The owner or operator of a sweat furnace shall comply with the emission standard of paragraph (f)(2) of this section.

(1) The owner or operator is not required to conduct a performance test to demonstrate compliance with the emission standard of paragraph (f)(2) of this section, provided that, on and after the compliance date of this rule, the owner or operator operates and maintains an afterburner with a design residence time of two seconds or greater and an operating temperature of 1600 °F or greater.

(2) On and after the date the initial performance test is conducted or required to be conducted, or if no compliance test is required, on and after the compliance date of this rule, whichever date is earlier, the owner or operator of a sweat furnace at a secondary aluminum production facility that is a major or area source must not discharge or cause to be discharged to the atmosphere emissions in excess of 0.80 nanogram (ng) of D/F TEQ per dscm (3.5×10^{-10} gr per dscf) at 11 percent oxygen (O_2).

(g) *Dross-only furnace.* On and after the date the initial performance test is conducted or required to be conducted, whichever date is earlier, the owner or operator of a dross-only furnace at a secondary aluminum production facility that is a major source must not discharge or cause to be discharged to the atmosphere:

(1) Emissions in excess of 0.15 kg of PM per Mg (0.30 lb of PM per ton) of feed/charge.

(2) Visible emissions in excess of 10 percent opacity from any PM add-on air pollution control device if a COM is chosen as the monitoring option.

(h) *Rotary dross cooler.* On and after the date the initial performance test is conducted or required to be conducted, whichever date is earlier, the owner or operator of a rotary dross cooler at a secondary aluminum production facility that is a major source must not discharge or cause to be discharged to the atmosphere:

(1) Emissions in excess of 0.09 g of PM per dscm (0.04 gr per dscf).

(2) Visible emissions in excess of 10 percent opacity from any PM add-on air pollution control device if a COM is chosen as the monitoring option.

(i) *Group 1 furnace.* The owner or operator of a group 1 furnace must use the limits in this paragraph to determine the emission standards for a SAPU.

(1) 0.20 kg of PM per Mg (0.40 lb of PM per ton) of feed/charge from a group 1 furnace, that is not a melting/holding furnace processing only clean charge, at a secondary aluminum production facility that is a major source;

(2) 0.40 kg of PM per Mg (0.80 lb of PM per ton) of feed/charge from a group 1 melting/holding furnace processing only clean charge at a secondary aluminum production facility that is a major source;

(3) 15 μg of D/F TEQ per Mg (2.1×10^{-4} gr of D/F TEQ per ton) of feed/charge from a group 1 furnace at a secondary aluminum production facility that is a major or area source. This limit does not apply if the furnace processes only clean charge; and

(4) 0.20 kg of HCl per Mg (0.40 lb of HCl per ton) of feed/charge or, if the furnace is equipped with an add-on air pollution control device, 10 percent of the uncontrolled HCl emissions, by weight, for a group 1 furnace at a secondary aluminum production facility that is a major source.

(5) The owner or operator of a group 1 furnace at a secondary aluminum production facility that is a major source must not discharge or cause to be discharged to the atmosphere visible emissions in excess of 10 percent opacity from any PM add-on air pollution control device if a COM is chosen as the monitoring option.

(6) The owner or operator may determine the emission standards for a SAPU by applying the group 1 furnace limits on the basis of the aluminum production weight in each group 1 furnace, rather than on the basis of feed/charge.

(7) The owner or operator of a sidewell group 1 furnace that conducts reactive fluxing (except for cover flux) in the hearth, or that conducts reactive fluxing in the sidewell at times when the level of molten metal falls below the top of the passage between the sidewell and the hearth, must comply with the emission limits of paragraphs (j)(1) through (j)(4) of this section on the basis of the combined emissions from the sidewell and the hearth.

(j) *In-line fluxer.* Except as provided in paragraph (j)(3) of this section for an in-line fluxer using no reactive flux material, the owner or operator of an in-line fluxer must use the limits in this paragraph to determine the emission standards for a SAPU.

(1) 0.02 kg of HCl per Mg (0.04 lb of HCl per ton) of feed/charge;

(2) 0.005 kg of PM per Mg (0.01 lb of PM per ton) of feed/charge.

(3) The emission limits in paragraphs (j)(1) and (j)(2) of this section do not apply to an in-line fluxer that uses no reactive flux materials.

(4) The owner or operator of an in-line fluxer at a secondary aluminum production facility that is a major source must not discharge or cause to be discharged to the atmosphere visible emissions in excess of 10 percent opacity from any PM add-on air pollution control device used to control emissions from the in-line fluxer, if a COM is chosen as the monitoring option.

(5) The owner or operator may determine the emission standards for a SAPU by applying the in-line fluxer limits on the basis of the aluminum production weight in each in-line fluxer, rather than on the basis of feed/charge.

(k) *Secondary aluminum processing unit.* On and after the date of approval of the operation, maintenance and monitoring (OM&M) plan, the owner or operator must comply with the emission limits calculated using the equations for PM and HCl in paragraphs (k)(1) and (k)(2) of this section for each secondary aluminum processing unit at a secondary aluminum production facility that is a major source. The owner or operator must comply with the emission limit calculated using the equation for D/F in paragraph (k)(3) of this section for each secondary aluminum processing unit at a secondary aluminum production facility that is a major or area source.

(1) The owner or operator must not discharge or allow to be discharged to the atmosphere any 3-day, 24-hour rolling average emissions of PM in excess of:

$$L_{C_{PM}} = \frac{\sum_{i=1}^{n}\left(L_{ti_{PM}} \times T_{ti}\right)}{\sum_{i=1}^{n}\left(T_{ti}\right)} \qquad \text{(Eq. 1)}$$

Where,

L_{tiPM} = The PM emission limit for individual emission unit i in paragraph (i)(1) and (2) of this section for a group 1 furnace or in paragraph (j)(2) of this section for an in-line fluxer;

T_{ti} = The feed/charge rate for individual emission unit I; and

L_{cPM} = The PM emission limit for the secondary aluminum processing unit.

Note: In-line fluxers using no reactive flux materials cannot be included in this calculation since they are not subject to the PM limit.

(2) The owner or operator must not discharge or allow to be discharged to the atmosphere any 3-day, 24-hour rolling average emissions of HCl in excess of:

$$L_{C_{HCl}} = \frac{\sum_{i=1}^{n}\left(L_{ti_{HCl}} \times T_{ti}\right)}{\sum_{i=1}^{n}\left(T_{ti}\right)} \qquad \text{(Eq. 2)}$$

Where,

L_{tiHCl} = The HCl emission limit for individual emission unit i in paragraph (i)(4) of this section for a group 1 furnace or in paragraph (j)(1) of this section for an in-line fluxer; and

L_{cHCl} = The HCl emission limit for the secondary aluminum processing unit.

Note: In-line fluxers using no reactive flux materials cannot be included in this calculation since they are not subject to the HCl limit.

(3) The owner or operator must not discharge or allow to be discharged to the atmosphere any 3-day, 24-hour rolling average emissions of D/F in excess of:

$$L_{C_{D/F}} = \frac{\sum_{i=1}^{n}\left(L_{ti_{D/F}} \times T_{ti}\right)}{\sum_{i=1}^{n}\left(T_{ti}\right)} \qquad \text{(Eq. 3)}$$

Where,

$L_{tiD/F}$ = The D/F emission limit for individual emission unit i in paragraph (i)(3) of this section for a group 1 furnace; and

$L_{cD/F}$ = The D/F emission limit for the secondary aluminum processing unit.

Note: Clean charge furnaces cannot be included in this calculation since they are not subject to the D/F limit.

(4) The owner or operator of a SAPU at a secondary aluminum production facility that is a major source may demonstrate compliance with the emission limits of paragraphs (k)(1) through (3) of this section by demonstrating that each emission unit within the SAPU is in compliance with the applicable emission limits of paragraphs (i) and (j) of this section.

(5) The owner or operator of a SAPU at a secondary aluminum production facility that is an area source may demonstrate compliance with the emission limits of paragraph (k)(3) of this section by demonstrating that each emission unit within the SAPU is in compliance with the emission limit of paragraph (i)(3) of this section.

§ 63.1506 Operating requirements.

(a) *Summary.* (1) On and after the date on which the initial performance test is conducted or required to be conducted, whichever date is earlier, the owner or operator must operate all new and existing affected sources and control equipment according to the requirements in this section.

(2) The completion of the initial performance tests for SAPUs shall be considered to be the date of approval of the OM&M plan by the permitting authority.

(3) The owner or operator of an existing sweat furnace that meets the specifications of § 63.1505(f)(1) must operate the sweat furnace and control equipment according to the requirements of this section on and after the compliance date of this standard.

(4) The owner or operator of a new sweat furnace that meets the specifications of § 63.1505(f)(1) must operate the sweat furnace and control equipment according to the requirements of this section by March 23, 2000 or upon startup, whichever is later.

(5) Operating requirements are summarized in Table 2 to this subpart.

(b) *Labeling.* The owner or operator must provide and maintain easily

visible labels posted at each group 1 furnace, group 2 furnace, in-line fluxer and scrap dryer/delacquering kiln/decoating kiln that identifies the applicable emission limits and means of compliance, including:

(1) The type of affected source or emission unit (*e.g.*, scrap dryer/delacquering kiln/decoating kiln, group 1 furnace, group 2 furnace, in-line fluxer).

(2) The applicable operational standard(s) and control method(s) (work practice or control device). This includes, but is not limited to, the type of charge to be used for a furnace (*e.g.*, clean scrap only, all scrap, etc.), flux materials and addition practices, and the applicable operating parameter ranges and requirements as incorporated in the OM&M plan.

(3) The afterburner operating temperature and design residence time for a scrap dryer/delacquering kiln/decoating kiln.

(c) *Capture/collection systems.* For each affected source or emission unit equipped with an add-on air pollution control device, the owner or operator must:

(1) Design and install a system for the capture and collection of emissions to meet the engineering standards for minimum exhaust rates as published by the American Conference of Governmental Industrial Hygienists in chapters 3 and 5 of "Industrial Ventilation: A Manual of Recommended Practice" (incorporated by reference in § 63.1502 of this subpart);

(2) Vent captured emissions through a closed system, except that dilution air may be added to emission streams for the purpose of controlling temperature at the inlet to a fabric filter; and

(3) Operate each capture/collection system according to the procedures and requirements in the OM&M plan.

(d) *Feed/charge weight.* The owner or operator of each affected source or emission unit subject to an emission limit in kg/Mg (lb/ton) of feed/charge must:

(1) Except as provided in paragraph (d)(3) of this section, install and operate a device that measures and records or otherwise determine the weight of feed/charge (or throughput) for each operating cycle or time period used in the performance test; and

(2) Operate each weight measurement system or other weight determination procedure in accordance with the OM&M plan.

(3) The owner or operator may chose to measure and record aluminum production weight from an affected source or emission unit rather than feed/charge weight to an affected source or emission unit, provided that:

(i) The aluminum production weight, rather than feed/charge weight is measured and recorded for all emission units within a SAPU; and

(ii) All calculations to demonstrate compliance with the emission limits for SAPUs are based on aluminum production weight rather than feed/charge weight.

(e) *Aluminum scrap shredder.* The owner or operator of a scrap shredder with emissions controlled by a fabric filter must operate a bag leak detection system, or a continuous opacity monitor, or conduct visible emissions observations.

(1) If a bag leak detection system is used to meet the monitoring requirements in § 63.1510, the owner or operator must:

(i) Initiate corrective action within 1-hour of a bag leak detection system alarm and complete the corrective action procedures in accordance with the OM&M plan.

(ii) Operate each fabric filter system such that the bag leak detection system alarm does not sound more than 5 percent of the operating time during a 6-month block reporting period. In calculating this operating time fraction, if inspection of the fabric filter demonstrates that no corrective action is required, no alarm time is counted. If corrective action is required, each alarm shall be counted as a minimum of 1 hour. If the owner or operator takes longer than 1 hour to initiate corrective action, the alarm time shall be counted as the actual amount of time taken by the owner or operator to initiate corrective action.

(2) If a continuous opacity monitoring system is used to meet the monitoring requirements in § 63.1510, the owner or operator must initiate corrective action within 1-hour of any 6-minute average reading of 5 percent or more opacity and complete the corrective action procedures in accordance with the OM&M plan.

(3) If visible emission observations are used to meet the monitoring requirements in § 63.1510, the owner or operator must initiate corrective action within 1-hour of any observation of visible emissions during a daily visible emissions test and complete the corrective action procedures in accordance with the OM&M plan.

(f) *Thermal chip dryer.* The owner or operator of a thermal chip dryer with emissions controlled by an afterburner must:

(1) Maintain the 3-hour block average operating temperature of each afterburner at or above the average temperature established during the performance test.

(2) Operate each afterburner in accordance with the OM&M plan.

(3) Operate each thermal chip dryer using only unpainted aluminum chips as the feedstock.

(g) *Scrap dryer/delacquering kiln/decoating kiln.* The owner or operator of a scrap dryer/delacquering kiln/decoating kiln with emissions controlled by an afterburner and a lime-injected fabric filter must:

(1) For each afterburner,

(i) Maintain the 3-hour block average operating temperature of each afterburner at or above the average temperature established during the performance test.

(ii) Operate each afterburner in accordance with the OM&M plan.

(2) If a bag leak detection system is used to meet the fabric filter monitoring requirements in § 63.1510,

(i) Initiate corrective action within 1-hour of a bag leak detection system alarm and complete any necessary corrective action procedures in accordance with the OM&M plan.

(ii) Operate each fabric filter system such that the bag leak detection system alarm does not sound more than 5 percent of the operating time during a 6-month block reporting period. In calculating this operating time fraction, if inspection of the fabric filter demonstrates that no corrective action is required, no alarm time is counted. If corrective action is required, each alarm shall be counted as a minimum of 1 hour. If the owner or operator takes longer than 1 hour to initiate corrective action, the alarm time shall be counted as the actual amount of time taken by the owner or operator to initiate corrective action.

(3) If a continuous opacity monitoring system is used to meet the monitoring requirements in § 63.1510, initiate corrective action within 1-hour of any 6-minute average reading of 5 percent or more opacity and complete the corrective action procedures in accordance with the OM&M plan.

(4) Maintain the 3-hour block average inlet temperature for each fabric filter at or below the average temperature established during the performance test, plus 14 °C (plus 25 °F).

(5) For a continuous injection device, maintain free-flowing lime in the hopper to the feed device at all times and maintain the lime feeder setting at the same level established during the performance test.

(h) *Sweat furnace.* The owner or operator of a sweat furnace with emissions controlled by an afterburner must:

(1) Maintain the 3-hour block average operating temperature of each afterburner at or above:

(i) The average temperature established during the performance test; or

(ii) 1600 °F if a performance test was not conducted, and the afterburner meets the specifications of § 63.1505(f)(1).

(2) Operate each afterburner in accordance with the OM&M plan.

(i) *Dross-only furnace.* The owner or operator of a dross-only furnace with emissions controlled by a fabric filter must:

(1) If a bag leak detection system is used to meet the monitoring requirements in § 63.1510,

(i) Initiate corrective action within 1-hour of a bag leak detection system alarm and complete the corrective action procedures in accordance with the OM&M plan.

(ii) Operate each fabric filter system such that the bag leak detection system alarm does not sound more than 5 percent of the operating time during a 6-month block reporting period. In calculating this operating time fraction, if inspection of the fabric filter demonstrates that no corrective action is required, no alarm time is counted. If corrective action is required, each alarm shall be counted as a minimum of 1 hour. If the owner or operator takes longer than 1 hour to initiate corrective action, the alarm time shall be counted as the actual amount of time taken by the owner or operator to initiate corrective action.

(2) If a continuous opacity monitoring system is used to meet the monitoring requirements in § 63.1510, initiate corrective action within 1-hour of any 6-minute average reading of 5 percent or more opacity and complete the corrective action procedures in accordance with the OM&M plan.

(3) Operate each furnace using dross as the sole feedstock.

(j) *Rotary dross cooler.* The owner or operator of a rotary dross cooler with emissions controlled by a fabric filter must:

(1) If a bag leak detection system is used to meet the monitoring requirements in § 63.1510,

(i) Initiate corrective action within 1-hour of a bag leak detection system alarm and complete the corrective action procedures in accordance with the OM&M plan.

(ii) Operate each fabric filter system such that the bag leak detection system alarm does not sound more than 5 percent of the operating time during a 6-month block reporting period. In calculating this operating time fraction, if inspection of the fabric filter demonstrates that no corrective action is required, no alarm time is counted. If corrective action is required, each alarm shall be counted as a minimum of 1 hour. If the owner or operator takes longer than 1 hour to initiate corrective action, the alarm time shall be counted as the actual amount of time taken by the owner or operator to initiate corrective action.

(2) If a continuous opacity monitoring system is used to meet the monitoring requirements in § 63.1510, initiate corrective action within 1 hour of any 6-minute average reading of 5 percent or more opacity and complete the corrective action procedures in accordance with the OM&M plan.

(k) *In-line fluxer.* The owner or operator of an in-line fluxer with emissions controlled by a lime-injected fabric filter must:

(1) If a bag leak detection system is used to meet the monitoring requirements in § 63.1510,

(i) Initiate corrective action within 1-hour of a bag leak detection system alarm and complete the corrective action procedures in accordance with the OM&M plan.

(ii) Operate each fabric filter system such that the bag leak detection system alarm does not sound more than 5 percent of the operating time during a 6-month block reporting period. In calculating this operating time fraction, if inspection of the fabric filter demonstrates that no corrective action is required, no alarm time is counted. If corrective action is required, each alarm shall be counted as a minimum of 1 hour. If the owner or operator takes longer than 1 hour to initiate corrective action, the alarm time shall be counted as the actual amount of time taken by the owner or operator to initiate corrective action.

(2) If a continuous opacity monitoring system is used to meet the monitoring requirements in § 63.1510, initiate corrective action within 1 hour of any 6-minute average reading of 5 percent or more opacity and complete the corrective action procedures in accordance with the OM&M plan.

(3) For a continuous injection system, maintain free-flowing lime in the hopper to the feed device at all times and maintain the lime feeder setting at the same level established during the performance test.

(4) Maintain the total reactive chlorine flux injection rate for each operating cycle or time period used in the performance test at or below the average rate established during the performance test.

(l) *In-line fluxer using no reactive flux material.* The owner or operator of a new or existing in-line fluxer using no reactive flux materials must operate each in-line fluxer using no reactive flux materials.

(m) *Group 1 furnace with add-on air pollution control devices.* The owner or operator of a group 1 furnace with emissions controlled by a lime-injected fabric filter must:

(1) If a bag leak detection system is used to meet the monitoring requirements in § 63.1510, the owner or operator must:

(i) Initiate corrective action within 1 hour of a bag leak detection system alarm.

(ii) Complete the corrective action procedures in accordance with the OM&M plan.

(iii) Operate each fabric filter system such that the bag leak detection system alarm does not sound more than 5 percent of the operating time during a 6-month block reporting period. In calculating this operating time fraction, if inspection of the fabric filter demonstrates that no corrective action is required, no alarm time is counted. If corrective action is required, each alarm shall be counted as a minimum of 1 hour. If the owner or operator takes longer than 1 hour to initiate corrective action, the alarm time shall be counted as the actual amount of time taken by the owner or operator to initiate corrective action.

(2) If a continuous opacity monitoring system is used to meet the monitoring requirements in § 63.1510, the owner or operator must:

(i) Initiate corrective action within 1 hour of any 6-minute average reading of 5 percent or more opacity; and

(ii) Complete the corrective action procedures in accordance with the OM&M plan.

(3) Maintain the 3-hour block average inlet temperature for each fabric filter at or below the average temperature established during the performance test, plus 14 °C (plus 25 °F).

(4) For a continuous lime injection system, maintain free-flowing lime in the hopper to the feed device at all times and maintain the lime feeder setting at the same level established during the performance test.

(5) Maintain the total reactive chlorine flux injection rate for each operating cycle or time period used in the performance test at or below the average rate established during the performance test.

(6) Operate each sidewell furnace such that:

(i) The level of molten metal remains above the top of the passage between the

side-well and hearth during reactive flux injection, unless the hearth also is equipped with an add-on control device.

(ii) Reactive flux is added only in the sidewell unless the hearth also is equipped with an add-on control device.

(n) *Group 1 furnace without add-on air pollution control devices.* The owner or operator of a group 1 furnace (including a group 1 furnace that is part of a secondary aluminum processing unit) without add-on air pollution control devices must:

(1) Maintain the total reactive chlorine flux injection rate for each operating cycle or time period used in the performance test at or below the average rate established during the performance test.

(2) Operate each furnace in accordance with the work practice/pollution prevention measures documented in the OM&M plan and within the parameter values or ranges established in the OM&M plan.

(3) Operate each group 1 melting/holding furnace subject to the emission standards in § 63.1505(i)(2) using only clean charge as the feedstock.

(o) *Group 2 furnace.* The owner or operator of a new or existing group 2 furnace must:

(1) Operate each furnace using only clean charge as the feedstock.

(2) Operate each furnace using no reactive flux.

(p) *Corrective action.* When a process parameter or add-on air pollution control device operating parameter deviates from the value or range established during the performance test and incorporated in the OM&M plan, the owner or operator must initiate corrective action. Corrective action must restore operation of the affected source or emission unit (including the process or control device) to its normal or usual mode of operation as expeditiously as practicable in accordance with good air pollution control practices for minimizing emissions. Corrective actions taken must include follow-up actions necessary to return the process or control device parameter level(s) to the value or range of values established during the performance test and steps to prevent the likely recurrence of the cause of a deviation.

§ 63.1507–§ 63.1509 [Reserved]

Monitoring and Compliance Requirements

§ 63.1510 Monitoring requirements.

(a) *Summary.* On and after the date the initial performance test is completed or required to be completed, whichever date is earlier, the owner or operator of a new or existing affected source or emission unit must monitor all control equipment and processes according to the requirements in this section. Monitoring requirements for each type of affected source and emission unit are summarized in Table 3 to this subpart.

(b) *Operation, maintenance, and monitoring (OM&M) plan.* The owner or operator must prepare and implement for each new or existing affected source and emission unit, a written operation, maintenance, and monitoring (OM&M) plan. The owner or operator must submit the plan to the applicable permitting authority for review and approval as part of the application for a part 70 or part 71 permit. Any subsequent changes to the plan must be submitted to the applicable permitting authority for review and approval. Pending approval by the applicable permitting authority of an initial or amended plan, the owner or operator must comply with the provisions of the submitted plan. Each plan must contain the following information:

(1) Process and control device parameters to be monitored to determine compliance, along with established operating levels or ranges, as applicable, for each process and control device.

(2) A monitoring schedule for each affected source and emission unit.

(3) Procedures for the proper operation and maintenance of each process unit and add-on control device used to meet the applicable emission limits or standards in § 63.1505.

(4) Procedures for the proper operation and maintenance of monitoring devices or systems used to determine compliance, including:

(i) Calibration and certification of accuracy of each monitoring device, at least once every 6 months, according to the manufacturer's instructions; and

(ii) Procedures for the quality control and quality assurance of continuous emission or opacity monitoring systems as required by the general provisions in subpart A of this part.

(5) Procedures for monitoring process and control device parameters, including procedures for annual inspections of afterburners, and if applicable, the procedure to be used for determining charge/feed (or throughput) weight if a measurement device is not used.

(6) Corrective actions to be taken when process or operating parameters or add-on control device parameters deviate from the value or range established in paragraph (b)(1) of this section, including:

(i) Procedures to determine and record the cause of an deviation or excursion, and the time the deviation or excursion began and ended; and

(ii) Procedures for recording the corrective action taken, the time corrective action was initiated, and the time/date corrective action was completed.

(7) A maintenance schedule for each process and control device that is consistent with the manufacturer's instructions and recommendations for routine and long-term maintenance.

(8) Documentation of the work practice and pollution prevention measures used to achieve compliance with the applicable emission limits and a site-specific monitoring plan as required in paragraph (o) of this section for each group 1 furnace not equipped with an add-on air pollution control device.

(c) *Labeling.* The owner or operator must inspect the labels for each group 1 furnace, group 2 furnace, in-line fluxer and scrap dryer/delacquering kiln/decoating kiln at least once per calendar month to confirm that posted labels as required by the operational standard in § 63.1506(b) are intact and legible.

(d) *Capture/collection system.* The owner or operator must:

(1) Install, operate, and maintain a capture/collection system for each affected source and emission unit equipped with an add-on air pollution control device; and

(2) Inspect each capture/collection and closed vent system at least once each calendar year to ensure that each system is operating in accordance with the operating requirements in § 63.1506(c) and record the results of each inspection.

(e) *Feed/charge weight.* The owner or operator of an affected source or emission unit subject to an emission limit in kg/Mg (lb/ton) or μg/Mg (gr/ton) of feed/charge must install, calibrate, operate, and maintain a device to measure and record the total weight of feed/charge to, or the aluminum production from, the affected source or emission unit over the same operating cycle or time period used in the performance test. Feed/charge or aluminum production within SAPUs must be measured and recorded on an emission unit-by-emission unit basis. As an alternative to a measurement device, the owner or operator may use a procedure acceptable to the applicable permitting authority to determine the total weight of feed/charge or aluminum production to the affected source or emission unit.

(1) The accuracy of the weight measurement device or procedure must

be ±1 percent of the weight being measured. The owner or operator may apply to the permitting agency for approval to use a device of alternative accuracy if the required accuracy cannot be achieved as a result of equipment layout or charging practices. A device of alternative accuracy will not be approved unless the owner or operator provides assurance through data and information that the affected source will meet the relevant emission standard.

(2) The owner or operator must verify the calibration of the weight measurement device in accordance with the schedule specified by the manufacturer, or if no calibration schedule is specified, at least once every 6 months.

(f) *Fabric filters and lime-injected fabric filters.* The owner or operator of an affected source or emission unit using a fabric filter or lime-injected fabric filter to comply with the requirements of this subpart must install, calibrate, maintain, and continuously operate a bag leak detection system as required in paragraph (f)(1) of this section or a continuous opacity monitoring system as required in paragraph (f)(2) of this section. The owner or operator of an aluminum scrap shredder must install and operate a bag leak detection system as required in paragraph (f)(1) of this section, install and operate a continuous opacity monitoring system as required in paragraph (f)(2) of this section, or conduct visible emission observations as required in paragraph (f)(3) of this section.

(1) These requirements apply to the owner or operator of a new or existing affected source or existing emission unit using a bag leak detection system.

(i) The owner or operator must install and operate a bag leak detection system for each exhaust stack of a fabric filter.

(ii) Each triboelectric bag leak detection system must be installed, calibrated, operated, and maintained according to the "Fabric Filter Bag Leak Detection Guidance," (September 1997). This document is available from the U.S. Environmental Protection Agency; Office of Air Quality Planning and Standards; Emissions, Monitoring and Analysis Division; Emission Measurement Center (MD–19), Research Triangle Park, NC 27711. This document also is available on the Technology Transfer Network (TTN) under Emission Measurement Technical Information (EMTIC), Continuous Emission Monitoring. Other bag leak detection systems must be installed, operated, calibrated, and maintained in a manner consistent with the manufacturer's written specifications and recommendations.

(iii) The bag leak detection system must be certified by the manufacturer to be capable of detecting PM emissions at concentrations of 10 milligrams per actual cubic meter (0.0044 grains per actual cubic foot) or less.

(iv) The bag leak detection system sensor must provide output of relative or absolute PM loadings.

(v) The bag leak detection system must be equipped with a device to continuously record the output signal from the sensor.

(vi) The bag leak detection system must be equipped with an alarm system that will sound automatically when an increase in relative PM emissions over a preset level is detected. The alarm must be located where it is easily heard by plant operating personnel.

(vii) For positive pressure fabric filter systems, a bag leak detection system must be installed in each baghouse compartment or cell. For negative pressure or induced air fabric filters, the bag leak detector must be installed downstream of the fabric filter.

(viii) Where multiple detectors are required, the system's instrumentation and alarm may be shared among detectors.

(ix) The baseline output must be established by adjusting the range and the averaging period of the device and establishing the alarm set points and the alarm delay time.

(x) Following initial adjustment of the system, the owner or operator must not adjust the sensitivity or range, averaging period, alarm set points, or alarm delay time except as detailed in the OM&M plan. In no case may the sensitivity be increased by more than 100 percent or decreased more than 50 percent over a 365-day period unless such adjustment follows a complete fabric filter inspection which demonstrates that the fabric filter is in good operating condition.

(2) These requirements apply to the owner or operator of a new or existing affected source or an existing emission unit using a continuous opacity monitoring system.

(i) The owner or operator must install, calibrate, maintain, and operate a continuous opacity monitoring system to measure and record the opacity of emissions exiting each exhaust stack.

(ii) Each continuous opacity monitoring system must meet the design and installation requirements of Performance Specification 1 in appendix B to 40 CFR part 60.

(3) These requirements apply to the owner or operator of a new or existing aluminum scrap shredder who conducts visible emission observations. The owner or operator must:

(i) Perform a visible emissions test for each aluminum scrap shredder using a certified observer at least once a day according to the requirements of Method 9 in appendix A to 40 CFR part 60. Each Method 9 test must consist of five 6-minute observations in a 30-minute period; and

(ii) Record the results of each test.

(g) *Afterburner.* These requirements apply to the owner or operator of an affected source using an afterburner to comply with the requirements of this subpart.

(1) The owner or operator must install, calibrate, maintain, and operate a device to continuously monitor and record the operating temperature of the afterburner consistent with the requirements for continuous monitoring systems in subpart A of this part.

(2) The temperature monitoring device must meet each of these performance and equipment specifications:

(i) The temperature monitoring device must be installed at the exit of the combustion zone of each afterburner.

(ii) The monitoring system must record the temperature in 15-minute block averages and determine and record the average temperature for each 3-hour block period.

(iii) The recorder response range must include zero and 1.5 times the average temperature established according to the requirements in § 63.1512(m).

(iv) The reference method must be a National Institute of Standards and Technology calibrated reference thermocouple-potentiometer system or alternate reference, subject to approval by the Administrator.

(3) The owner or operator must conduct an inspection of each afterburner at least once a year and record the results. At a minimum, an inspection must include:

(i) Inspection of all burners, pilot assemblies, and pilot sensing devices for proper operation and clean pilot sensor;

(ii) Inspection for proper adjustment of combustion air;

(iii) Inspection of internal structures (*e.g.*, baffles) to ensure structural integrity;

(iv) Inspection of dampers, fans, and blowers for proper operation;

(v) Inspection for proper sealing;

(vi) Inspection of motors for proper operation;

(vii) Inspection of combustion chamber refractory lining and clean and replace lining as necessary;

(viii) Inspection of afterburner shell for corrosion and/or hot spots;

(ix) Documentation, for the burn cycle that follows the inspection, that the

afterburner is operating properly and any necessary adjustments have been made; and

(x) Verification that the equipment is maintained in good operating condition.

(xi) Following an equipment inspection, all necessary repairs must be completed in accordance with the requirements of the OM&M plan.

(h) *Fabric filter inlet temperature.* These requirements apply to the owner or operator of a scrap dryer/delacquering kiln/decoating kiln or a group 1 furnace using a lime-injected fabric filter to comply with the requirements of this subpart.

(1) The owner or operator must install, calibrate, maintain, and operate a device to continuously monitor and record the temperature of the fabric filter inlet gases consistent with the requirements for continuous monitoring systems in subpart A of this part.

(2) The temperature monitoring device must meet each of these performance and equipment specifications:

(i) The monitoring system must record the temperature in 15-minute block averages and calculate and record the average temperature for each 3-hour block period.

(ii) The recorder response range must include zero and 1.5 times the average temperature established according to the requirements in § 63.1512(n).

(iii) The reference method must be a National Institute of Standards and Technology calibrated reference thermocouple-potentiometer system or alternate reference, subject to approval by the Administrator.

(i) *Lime injection.* These requirements apply to the owner or operator of an affected source or emission unit using a lime-injected fabric filter to comply with the requirements of this subpart.

(1) The owner or operator of a continuous lime injection system must verify that lime is always free-flowing by either:

(i) Inspecting each feed hopper or silo at least once each 8-hour period and recording the results of each inspection. If lime is found not to be free-flowing during any of the 8-hour periods, the owner or operator must increase the frequency of inspections to at least once every 4-hour period for the next 3 days. The owner or operator may return to inspections at least once every 8 hour period if corrective action results in no further blockages of lime during the 3-day period; or

(ii) Subject to the approval of the permitting agency, installing, operating and maintaining a load cell, carrier gas/lime flow indicator, carrier gas pressure drop measurement system or other system to confirm that lime is free-flowing. If lime is found not to be free-flowing, the owner or operator must promptly initiate and complete corrective action, or

(iii) Subject to the approval of the permitting agency, installing, operating and maintaining a device to monitor the concentration of HCl at the outlet of the fabric filter. If an increase in the concentration of HCl indicates that the lime is not free-flowing, the owner or operator must promptly initiate and complete corrective action.

(2) The owner or operator of a continuous lime injection system must record the lime feeder setting once each day of operation.

(3) An owner or operator who intermittently adds lime to a lime coated fabric filter must obtain approval from the permitting authority for a lime addition monitoring procedure. The permitting authority will not approve a monitoring procedure unless data and information are submitted establishing that the procedure is adequate to ensure that relevant emission standards will be met on a continuous basis.

(j) *Total reactive flux injection rate.* These requirements apply to the owner or operator of a group 1 furnace (with or without add-on air pollution control devices) or in-line fluxer. The owner or operator must:

(1) Install, calibrate, operate, and maintain a device to continuously measure and record the weight of gaseous or liquid reactive flux injected to each affected source or emission unit.

(i) The monitoring system must record the weight for each 15-minute block period, during which reactive fluxing occurs, over the same operating cycle or time period used in the performance test.

(ii) The accuracy of the weight measurement device must be ±1 percent of the weight of the reactive component of the flux being measured. The owner or operator may apply to the permitting authority for permission to use a weight measurement device of alternative accuracy in cases where the reactive flux flow rates are so low as to make the use of a weight measurement device of ±1 percent impracticable. A device of alternative accuracy will not be approved unless the owner or operator provides assurance through data and information that the affected source will meet the relevant emission standards.

(iii) The owner or operator must verify the calibration of the weight measurement device in accordance with the schedule specified by the manufacturer, or if no calibration schedule is specified, at least once every 6 months.

(2) Calculate and record the gaseous or liquid reactive flux injection rate (kg/Mg or lb/ton) for each operating cycle or time period used in the performance test using the procedure in § 63.1512(o).

(3) Record, for each 15-minute block period during each operating cycle or time period used in the performance test during which reactive fluxing occurs, the time, weight, and type of flux for each addition of:

(i) Gaseous or liquid reactive flux other than chlorine; and

(ii) Solid reactive flux.

(4) Calculate and record the total reactive flux injection rate for each operating cycle or time period used in the performance test using the procedure in § 63.1512(o).

(5) The owner or operator of a group 1 furnace or in-line fluxer performing reactive fluxing may apply to the Administrator for approval of an alternative method for monitoring and recording the total reactive flux addition rate based on monitoring the weight or quantity of reactive flux per ton of feed/charge for each operating cycle or time period used in the performance test. An alternative monitoring method will not be approved unless the owner or operator provides assurance through data and information that the affected source will meet the relevant emission standards on a continuous basis.

(k) *Thermal chip dryer.* These requirements apply to the owner or operator of a thermal chip dryer with emissions controlled by an afterburner. The owner or operator must:

(1) Record the type of materials charged to the unit for each operating cycle or time period used in the performance test.

(2) Submit a certification of compliance with the applicable operational standard for charge materials in § 63.1506(f)(3) for each 6-month reporting period. Each certification must contain the information in § 63.1516(b)(2)(i).

(l) *Dross-only furnace.* These requirements apply to the owner or operator of a dross-only furnace. The owner or operator must:

(1) Record the materials charged to each unit for each operating cycle or time period used in the performance test.

(2) Submit a certification of compliance with the applicable operational standard for charge materials in § 63.1506(i)(3) for each 6-month reporting period. Each certification must contain the information in § 63.1516(b)(2)(ii).

(m) *In-line fluxers using no reactive flux.* The owner or operator of an in-line fluxer that uses no reactive flux

materials must submit a certification of compliance with the operational standard for no reactive flux materials in § 63.1506(l) for each 6-month reporting period. Each certification must contain the information in § 63.1516(b)(2)(vi).

(n) *Sidewell group 1 furnace with add-on air pollution control devices.* These requirements apply to the owner or operator of a sidewell group 1 furnace using add-on air pollution control devices. The owner or operator must:

(1) Record in an operating log for each charge of a sidewell furnace that the level of molten metal was above the top of the passage between the sidewell and hearth during reactive flux injection, unless the furnace hearth was also equipped with an add-on control device.

(2) Submit a certification of compliance with the operational standards in § 63.1506(m)(7) for each 6-month reporting period. Each certification must contain the information in § 63.1516(b)(2)(iii).

(o) *Group 1 furnace without add-on air pollution control devices.* These requirements apply to the owner or operator of a group 1 furnace that is not equipped with an add-on air pollution control device.

(1) The owner or operator must develop, in consultation with the applicable permitting authority, a written site-specific monitoring plan. The site-specific monitoring plan must be part of the OM&M plan that addresses monitoring and compliance requirements for PM, HCl, and D/F emissions.

(i) The owner or operator of an existing affected source must submit the site-specific monitoring plan to the applicable permitting authority for review at least 6 months prior to the compliance date.

(ii) The permitting authority will review and approve or disapprove a proposed plan, or request changes to a plan, based on whether the plan contains sufficient provisions to ensure continuing compliance with applicable emission limits and demonstrates, based on documented test results, the relationship between emissions of PM, HCl, and D/F and the proposed monitoring parameters for each pollutant. Test data must establish the highest level of PM, HCl, and D/F that will be emitted from the furnace. Subject to permitting agency approval of the OM&M plan, this may be determined by conducting performance tests and monitoring operating parameters while charging the furnace with feed/charge materials containing the highest anticipated levels of oils and coatings and fluxing at the highest anticipated rate.

(2) Each site-specific monitoring plan must document each work practice, equipment/design practice, pollution prevention practice, or other measure used to meet the applicable emission standards.

(3) Each site-specific monitoring plan must include provisions for unit labeling as required in paragraph (c) of this section, feed/charge weight measurement (or production weight measurement) as required in paragraph (e) of this section and flux weight measurement as required in paragraph (j) of this section.

(4) Each site-specific monitoring plan for a melting/holding furnace subject to the clean charge emission standard in § 63.1505(i)(3) must include these requirements:

(i) The owner or operator must record the type of feed/ charge (*e.g.*, ingot, thermally dried chips, dried scrap, etc.) for each operating cycle or time period used in the performance test; and

(ii) The owner or operator must submit a certification of compliance with the applicable operational standard for clean charge materials in § 63.1506(n)(3) for each 6-month reporting period. Each certification must contain the information in § 63.1516(b)(2)(iv).

(5) If a continuous emission monitoring system is included in a site-specific monitoring plan, the plan must include provisions for the installation, operation, and maintenance of the system to provide quality-assured measurements in accordance with all applicable requirements of the general provisions in subpart A of this part.

(6) If a continuous opacity monitoring system is included in a site-specific monitoring plan, the plan must include provisions for the installation, operation, and maintenance of the system to provide quality-assured measurements in accordance with all applicable requirements of this subpart.

(7) If a site-specific monitoring plan includes a scrap inspection program for monitoring the scrap contaminant level of furnace feed/charge materials, the plan must include provisions for the demonstration and implementation of the program in accordance with all applicable requirements in paragraph (p) of this section.

(8) If a site-specific monitoring plan includes a calculation method for monitoring the scrap contaminant level of furnace feed/charge materials, the plan must include provisions for the demonstration and implementation of the program in accordance with all applicable requirements in paragraph (q) of this section.

(p) *Scrap inspection program for group 1 furnace without add-on air pollution control devices.* A scrap inspection program must include:

(1) A proven method for collecting representative samples and measuring the oil and coatings content of scrap samples;

(2) A scrap inspector training program;

(3) An established correlation between visual inspection and physical measurement of oil and coatings content of scrap samples;

(4) Periodic physical measurements of oil and coatings content of randomly-selected scrap samples and comparison with visual inspection results;

(5) A system for assuring that only acceptable scrap is charged to an affected group 1 furnace; and

(6) Recordkeeping requirements to document conformance with plan requirements.

(q) *Monitoring of scrap contamination level by calculation method for group 1 furnace without add-on air pollution control devices.* The owner or operator of a group 1 furnace dedicated to processing a distinct type of furnace feed/charge composed of scrap with a uniform composition (such as rejected product from a manufacturing process for which the coating-to-scrap ratio can be documented) may include a program in the site-specific monitoring plan for determining, monitoring, and certifying the scrap contaminant level using a calculation method rather than a scrap inspection program. A scrap contaminant monitoring program using a calculation method must include:

(1) Procedures for the characterization and documentation of the contaminant level of the scrap prior to the performance test.

(2) Limitations on the furnace feed/ charge to scrap of the same composition as that used in the performance test. If the performance test was conducted with a mixture of scrap and clean charge, limitations on the proportion of scrap in the furnace feed/charge to no greater than the proportion used during the performance test.

(3) Operating, monitoring, recordkeeping, and reporting requirements to ensure that no scrap with a contaminant level higher than that used in the performance test is charged to the furnace.

(r) *Group 2 furnace.* These requirements apply to the owner or operator of a new or existing group 2 furnace. The owner or operator must:

(1) Record a description of the materials charged to each furnace,

including any nonreactive, non-HAP-containing/non-HAP-generating fluxing materials or agents.

(2) Submit a certification of compliance with the applicable operational standard for charge materials in § 63.1506(o) for each 6-month reporting period. Each certification must contain the information in § 63.1516(b)(2)(v).

(s) *Site-specific requirements for secondary aluminum processing units.* (1) An owner or operator of a secondary aluminum processing unit at a facility must include, within the OM&M plan prepared in accordance with § 63.1510(b), the following information:

(i) The identification of each emission unit in the secondary aluminum processing unit;

(ii) The specific control technology or pollution prevention measure to be used for each emission unit in the secondary aluminum processing unit and the date of its installation or application;

(iii) The emission limit calculated for each secondary aluminum processing unit and performance test results with supporting calculations demonstrating initial compliance with each applicable emission limit;

(iv) Information and data demonstrating compliance for each emission unit with all applicable design, equipment, work practice or operational standards of this subpart; and

(v) The monitoring requirements applicable to each emission unit in a secondary aluminum processing unit and the monitoring procedures for daily calculation of the 3-day, 24-hour rolling average using the procedure in § 63.1510(t).

(2) The SAPU compliance procedures within the OM&M plan may not contain any of the following provisions:

(i) Any averaging among emissions of differing pollutants;

(ii) The inclusion of any affected sources other than emission units in a secondary aluminum processing unit;

(iii) The inclusion of any emission unit while it is shutdown; or

(iv) The inclusion of any periods of startup, shutdown, or malfunction in emission calculations.

(3) To revise the SAPU compliance provisions within the OM&M plan prior to the end of the permit term, the owner or operator must submit a request to the applicable permitting authority containing the information required by paragraph (s)(1) of this section and obtain approval of the applicable permitting authority prior to implementing any revisions.

(t) *Secondary aluminum processing unit.* Except as provided in paragraph (u) of this section, the owner or operator must calculate and record the 3-day, 24-hour rolling average emissions of PM, HCl, and D/F for each secondary aluminum processing unit on a daily basis. To calculate the 3-day, 24-hour rolling average, the owner or operator must:

(1) Calculate and record the total weight of material charged to each emission unit in the secondary aluminum processing unit for each 24-hour day of operation using the feed/charge weight information required in paragraph (e) of this section. If the owner or operator chooses to comply on the basis of weight of aluminum produced by the emission unit, rather than weight of material charged to the emission unit, all performance test emissions results and all calculations must be conducted on the aluminum production weight basis.

(2) Multiply the total feed/charge weight to the emission unit, or the weight of aluminum produced by the emission unit, for each emission unit for the 24-hour period by the emission rate (in lb/ton of feed/charge) for that emission unit (as determined during the performance test) to provide emissions for each emission unit for the 24-hour period, in pounds.

(3) Divide the total emissions for each SAPU for the 24-hour period by the total material charged to the SAPU, or the weight of aluminum produced by the SAPU over the 24-hour period to provide the daily emission rate for the SAPU.

(4) Compute the 24-hour daily emission rate using Equation 4:

$$E_{day} = \frac{\sum_{i=1}^{n}\left(T_i \times ER_i\right)}{\sum_{i=1}^{n} T_i} \qquad \text{(Eq. 4)}$$

Where,

E_{day} = The daily PM, HCl, or D/F emission rate for the secondary aluminum processing unit for the 24-hour period;

T_i = The total amount of feed, or aluminum produced, for emission unit i for the 24-hour period (tons);

ER_i = The measured emission rate for emission unit i as determined in the performance test (lb/ton or μg/Mg of feed/charge); and

n = The number of emission units in the secondary aluminum processing unit.

(5) Calculate and record the 3-day, 24-hour rolling average for each pollutant each day by summing the daily emission rates for each pollutant over the 3 most recent consecutive days and dividing by 3.

(u) *Secondary aluminum processing unit compliance by individual emission unit demonstration.* As an alternative to the procedures of paragraph (t) of this section, an owner or operator may demonstrate, through performance tests, that each individual emission unit within the secondary aluminum production unit is in compliance with the applicable emission limits for the emission unit.

(v) *Alternative monitoring method for lime addition.* The owner or operator of a lime-coated fabric filter that employs intermittent or noncontinuous lime addition may apply to the Administrator for approval of an alternative method for monitoring the lime addition schedule and rate based on monitoring the weight of lime added per ton of feed/charge for each operating cycle or time period used in the performance test. An alternative monitoring method will not be approved unless the owner or operator provides assurance through data and information that the affected source will meet the relevant emission standards on a continuous basis.

(w) *Alternative monitoring methods.* An owner or operator may submit an application to the Administrator for approval of alternate monitoring requirements to demonstrate compliance with the emission standards of this subpart, subject to the provisions of paragraphs (w)(1) through (6) of this section.

(1) The Administrator will not approve averaging periods other than those specified in this section.

(2) The owner or operator must continue to use the original monitoring requirement until necessary data are submitted and approval is received to use another monitoring procedure.

(3) The owner or operator shall submit the application for approval of alternate monitoring methods no later than the notification of the performance test. The application must contain the information specified in paragraphs (w)(3) (i) through (iii) of this section:

(i) Data or information justifying the request, such as the technical or economic infeasibility, or the impracticality of using the required approach;

(ii) A description of the proposed alternative monitoring requirements, including the operating parameters to be monitored, the monitoring approach and technique, and how the limit is to be calculated; and

(iii) Data and information documenting that the alternative monitoring requirement(s) would provide equivalent or better assurance of compliance with the relevant emission standard(s).

(4) The Administrator will not approve an alternate monitoring application unless it would provide equivalent or better assurance of compliance with the relevant emission standard(s). Before disapproving any alternate monitoring application, the Administrator will provide:

(i) Notice of the information and findings upon which the intended disapproval is based; and

(ii) Notice of opportunity for the owner or operator to present additional supporting information before final action is taken on the application. This notice will specify how much additional time is allowed for the owner or operator to provide additional supporting information.

(5) The owner or operator is responsible for submitting any supporting information in a timely manner to enable the Administrator to consider the application prior to the performance test. Neither submittal of an application nor the Administrator's failure to approve or disapprove the application relieves the owner or operator of the responsibility to comply with any provisions of this subpart.

(6) The Administrator may decide at any time, on a case-by-case basis, that additional or alternative operating limits, or alternative approaches to establishing operating limits, are necessary to demonstrate compliance with the emission standards of this subpart.

§ 63.1511 Performance test/compliance demonstration general requirements.

(a) *Site-specific test plan.* Prior to conducting a performance test required by this subpart, the owner or operator must prepare and submit a site-specific test plan meeting the requirements in § 63.7(c).

(b) *Initial performance test.* Following approval of the site-specific test plan, the owner or operator must demonstrate initial compliance with each applicable emission, equipment, work practice, or operational standard for each affected source and emission unit, and report the results in the notification of compliance status report as described in § 63.1515(b). The owner or operator must conduct each performance test according to the requirements of the general provisions in subpart A of this part and this subpart. Owners or operators of affected sources located at facilities which are area sources are subject only to those performance testing requirements pertaining to D/F. Owners or operators of sweat furnaces meeting the specifications of § 63.1505(f)(1) are not required to conduct a performance test.

(1) The owner or operator must conduct each test while the affected source or emission unit is operating at the highest production level with charge materials representative of the range of materials processed by the unit and, if applicable, at the highest reactive fluxing rate.

(2) Each performance test for a continuous process must consist of 3 separate runs; pollutant sampling for each run must be conducted for the time period specified in the applicable method or, in the absence of a specific time period in the test method, for a minimum of 3 hours.

(3) Each performance test for a batch process must consist of three separate runs; pollutant sampling for each run must be conducted over the entire process operating cycle.

(4) Where multiple affected sources or emission units are exhausted through a common stack, pollutant sampling for each run must be conducted over a period of time during which all affected sources or emission units complete at least 1 entire process operating cycle or for 24 hours, whichever is shorter.

(5) Initial compliance with an applicable emission limit or standard is demonstrated if the average of three runs conducted during the performance test is less than or equal to the applicable emission limit or standard.

(c) *Test methods.* The owner or operator must use the following methods in appendix A to 40 CFR part 60 to determine compliance with the applicable emission limits or standards:

(1) Method 1 for sample and velocity traverses.

(2) Method 2 for velocity and volumetric flow rate.

(3) Method 3 for gas analysis.

(4) Method 4 for moisture content of the stack gas.

(5) Method 5 for the concentration of PM.

(6) Method 9 for visible emission observations.

(7) Method 23 for the concentration of D/F.

(8) Method 25A for the concentration of THC, as propane.

(9) Method 26A for the concentration of HCl. Where a lime-injected fabric filter is used as the control device to comply with the 90 percent reduction standard, the owner or operator must measure the fabric filter inlet concentration of HCl at a point before lime is introduced to the system.

(d) *Alternative methods.* The owner or operator may use an alternative test method, subject to approval by the Administrator.

(e) *Repeat tests.* The owner or operator of new or existing affected sources and emission units located at secondary aluminum production facilities that are major sources must conduct a performance test every 5 years following the initial performance test.

(f) *Testing of representative emission units.* With the approval of the permitting authority, a single representative or similar group 1 furnace or in-line fluxer which is not controlled by an add-on control device may be tested to determine the emission rate of all like affected sources at a facility provided that:

(1) The tested emission unit must use identical feed/charge and flux materials in the same proportions as the emission units that it represents;

(2) The tested emission unit is subject to the same work practices and the emission units that it represents;

(3) The tested emission unit is of the same design as the emission units that it represents;

(4) The tested emission unit is tested under the highest load or capacity reasonably expected to occur for any of the emission units that it represents;

(5) At least one of each different style of emission unit at the facility is tested; and

(6) All add-on control devices are tested.

(g) *Establishment of monitoring and operating parameter values.* The owner or operator of new or existing affected sources and emission units must establish a minimum or maximum operating parameter value, or an operating parameter range for each parameter to be monitored as required by § 63.1510 that ensures compliance with the applicable emission limit or standard. To establish the minimum or maximum value or range, the owner or operator must use the appropriate procedures in this section and submit the information required by § 63.1515(b)(4) in the notification of compliance status report. The owner or operator may use existing data in addition to the results of performance tests to establish operating parameter values for compliance monitoring provided each of the following conditions are met to the satisfaction of the applicable permitting authority:

(1) The complete emission test report(s) used as the basis of the parameter(s) is submitted.

(2) The same test methods and procedures as required by this subpart were used in the test.

(3) The owner or operator certifies that no design or work practice changes have been made to the source, process, or emission control equipment since the time of the report.

(4) All process and control equipment operating parameters required to be monitored were monitored as required in this subpart and documented in the test report.

§ 63.1512 Performance test/compliance demonstration requirements and procedures.

(a) *Aluminum scrap shredder.* The owner or operator must conduct performance tests to measure PM emissions at the outlet of the control system. If visible emission observations is the selected monitoring option, the owner or operator must record visible emission observations from each exhaust stack for all consecutive 6-minute periods during the PM emission test according to the requirements of Method 9 in appendix A to 40 CFR part 60.

(b) *Thermal chip dryer.* The owner or operator must conduct a performance test to measure THC and D/F emissions at the outlet of the control device while the unit processes only unpainted aluminum chips.

(c) *Scrap dryer/delacquering kiln/decoating kiln.* The owner or operator must conduct performance tests to measure emissions of THC, D/F, HCl, and PM at the outlet of the control device.

(1) If the scrap dryer/delacquering kiln/decoating kiln is subject to the alternative emission limits in § 63.1505(e), the average afterburner operating temperature in each 3-hour block period must be maintained at or above 760 °C (1400 °F) for the test.

(2) The owner or operator of a scrap dryer/delacquering kiln/decoating kiln subject to the alternative limits in § 63.1505(e) must submit a written certification in the notification of compliance status report containing the information required by § 63.1515(b)(7).

(d) *Group 1 furnace with add-on air pollution control devices.* (1) The owner or operator of a group 1 furnace that processes scrap other than clean charge materials with emissions controlled by a lime-injected fabric filter must conduct performance tests to measure emissions of PM and D/F at the outlet of the control device and emissions of HCl at the outlet (for the emission limit) or the inlet and the outlet (for the percent reduction standard).

(2) The owner or operator of a group 1 furnace that processes only clean charge materials with emissions controlled by a lime-injected fabric filter must conduct performance tests to measure emissions of PM at the outlet of the control device and emissions of HCl at the outlet (for the emission limit) or the inlet and the outlet (for the percent reduction standard).

(3) The owner or operator may choose to determine the rate of reactive flux addition to the group 1 furnace and assume, for the purposes of demonstrating compliance with the SAPU emission limit, that all reactive flux added to the group 1 furnace is emitted. Under these circumstances, the owner or operator is not required to conduct an emission test for HCl.

(4) The owner or operator of a sidewell group 1 furnace that conducts reactive fluxing (except for cover flux) in the hearth, or that conducts reactive fluxing in the sidewell at times when the level of molten metal falls below the top of the passage between the sidewell and the hearth, must conduct the performance tests required by paragraph (d)(1) or (d)(2) of this section, to measure emissions from both the sidewell and the hearth.

(e) *Group 1 furnace (including melting holding furnaces) without add-on air pollution control devices.* In the site-specific monitoring plan required by § 63.1510(o), the owner or operator of a group 1 furnace (including a melting/holding furnaces) without add-on air pollution control devices must include data and information demonstrating compliance with the applicable emission limits.

(1) If the group 1 furnace processes other than clean charge material, the owner or operator must conduct emission tests to measure emissions of PM, HCl, and D/F at the furnace exhaust outlet.

(2) If the group 1 furnace processes only clean charge, the owner or operator must conduct emission tests to simultaneously measure emissions of PM and HCl at the furnace exhaust outlet. A D/F test is not required. Each test must be conducted while the group 1 furnace (including a melting/holding furnace) processes only clean charge.

(3) The owner or operator may choose to determine the rate of reactive flux addition to the group 1 furnace and assume, for the purposes of demonstrating compliance with the SAPU emission limit, that all reactive flux added to the group 1 furnace is emitted. Under these circumstances, the owner or operator is not required to conduct an emission test for HCl.

(f) *Sweat furnace.* Except as provided in § 63.1505(f)(1), the owner or operator must measure emissions of D/F from each sweat furnace at the outlet of the control device.

(g) *Dross-only furnace.* The owner or operator must conduct a performance test to measure emissions of PM from each dross-only furnace at the outlet of each control device while the unit processes only dross.

(h) *In-line fluxer.* (1) The owner or operator must conduct a performance test to measure emissions of HCl and PM. If the in-line fluxer is equipped with an add-on control device, the emissions must be measured at the outlet of the control device. If the in-line fluxer uses no reactive flux materials, emission tests for PM and HCl are not required.

(2) The owner or operator may choose to determine the rate of reactive flux addition to the in-line fluxer and assume, for the purposes of demonstrating compliance with the SAPU emission limit, that all reactive flux added to the in-line fluxer is emitted. Under these circumstances, the owner or operator is not required to conduct an emission test for HCl.

(i) *Rotary dross cooler.* The owner or operator must conduct a performance test to measure PM emissions at the outlet of the control device.

(j) *Secondary aluminum processing unit.* The owner or operator must conduct performance tests as described in paragraphs (j)(1) through (3) of this section. The results of the performance tests are used to establish emission rates in lb/ton of feed/charge for PM and HCl and μg TEQ/Mg of feed/charge for D/F emissions from each emission unit. These emission rates are used for compliance monitoring in the calculation of the 3-day, 24-hour rolling average emission rates using the equation in § 63.1510(t). A performance test is required for:

(1) Each group 1 furnace processing only clean charge to measure emissions of PM and either:

(i) Emissions of HCl (for the emission limit); or

(ii) The mass flow rate of HCl at the inlet to and outlet from the control device (for the percent reduction standard).

(2) Each group 1 furnace that processes scrap other than clean charge to measure emissions of PM and D/F and either:

(i) Emissions of HCl (for the emission limit); or

(ii) The mass flow rate of HCl at the inlet to and outlet from the control device (for the percent reduction standard).

(3) Each in-line fluxer to measure emissions of PM and HCl.

(k) *Feed/charge weight measurement.* During the emission test(s) conducted to determine compliance with emission limits in a kg/Mg (lb/ton) format, the owner or operator of an affected source or emission unit, subject to an emission limit in a kg/Mg (lb/ton) of feed/charge

format, must measure (or otherwise determine) and record the total weight of feed/charge to the affected source or emission unit for each of the three test runs and calculate and record the total weight. An owner or operator that chooses to demonstrate compliance on the basis of the aluminum production weight must measure the weight of aluminum produced by the emission unit or affected source instead of the feed/charge weight.

(l) *Continuous opacity monitoring system.* The owner or operator of an affected source or emission unit using a continuous opacity monitoring system must conduct a performance evaluation to demonstrate compliance with Performance Specification 1 in appendix B to 40 CFR part 60. Following the performance evaluation, the owner or operator must measure and record the opacity of emissions from each exhaust stack for all consecutive 6-minute periods during the PM emission test.

(m) *Afterburner.* These requirements apply to the owner or operator of an affected source using an afterburner to comply with the requirements of this subpart.

(1) Prior to the initial performance test, the owner or operator must conduct a performance evaluation for the temperature monitoring device according to the requirements of § 63.8.

(2) The owner or operator must use these procedures to establish an operating parameter value or range for the afterburner operating temperature.

(i) Continuously measure and record the operating temperature of each afterburner every 15 minutes during the THC and D/F performance tests;

(ii) Determine and record the 15-minute block average temperatures for the three test runs; and

(iii) Determine and record the 3-hour block average temperature measurements for the 3 test runs.

(n) *Inlet gas temperature.* The owner or operator of a scrap dryer/delacquering kiln/decoating kiln or a group 1 furnace using a lime-injected fabric filter must use these procedures to establish an operating parameter value or range for the inlet gas temperature.

(1) Continuously measure and record the temperature at the inlet to the lime-injected fabric filter every 15 minutes during the HCl and D/F performance tests;

(2) Determine and record the 15-minute block average temperatures for the 3 test runs; and

(3) Determine and record the 3-hour block average of the recorded temperature measurements for the 3 test runs.

(o) *Flux injection rate.* The owner or operator must use these procedures to establish an operating parameter value or range for the total reactive chlorine flux injection rate.

(1) Continuously measure and record the weight of gaseous or liquid reactive flux injected for each 15 minute period during the HCl and D/F tests, determine and record the 15-minute block average weights, and calculate and record the total weight of the gaseous or liquid reactive flux for the 3 test runs;

(2) Record the identity, composition, and total weight of each addition of solid reactive flux for the 3 test runs;

(3) Determine the total reactive chlorine flux injection rate by adding the recorded measurement of the total weight of chlorine in the gaseous or liquid reactive flux injected and the total weight of chlorine in the solid reactive flux using Equation 5:

$$W_t = F_1 W_1 + F_2 W_2 \qquad \text{(Eq. 5)}$$

Where,

W_t = Total chlorine usage, by weight;
F_1 = Fraction of gaseous or liquid flux that is chlorine;
W_1 = Weight of reactive flux gas injected;
F_2 = Fraction of solid reactive chloride flux that is chlorine (*e.g.*, F = 0.75 for magnesium chloride; and
W_2 = Weight of solid reactive flux;

(4) Divide the weight of total chlorine usage (W_t) for the 3 test runs by the recorded measurement of the total weight of feed for the 3 test runs; and

(5) If a solid reactive flux other than magnesium chloride is used, the owner or operator must derive the appropriate proportion factor subject to approval by the applicable permitting authority.

(p) *Lime injection.* The owner or operator of an affected source or emission unit using a lime-injected fabric filter system must use these procedures during the HCl and D/F tests to establish an operating parameter value for the feeder setting for each operating cycle or time period used in the performance test.

(1) For continuous lime injection systems, ensure that lime in the feed hopper or silo is free-flowing at all times; and

(2) Record the feeder setting for the 3 test runs. If the feed rate setting varies during the runs, determine and record the average feed rate from the 3 runs.

(q) *Bag leak detection system.* The owner or operator of an affected source or emission unit using a bag leak detection system must submit the information described in § 63.1515(b)(6) as part of the notification of compliance status report to document conformance with the specifications and requirements in § 63.1510(f).

(r) *Labeling.* The owner or operator of each scrap dryer/delacquering kiln/decoating kiln, group 1 furnace, group 2 furnace and in-line fluxer must submit the information described in § 63.1515(b)(3) as part of the notification of compliance status report to document conformance with the operational standard in § 63.1506(b).

(s) *Capture/collection system.* The owner or operator of a new or existing affected source or emission unit with an add-on control device must submit the information described in § 63.1515(b)(2) as part of the notification of compliance status report to document conformance with the operational standard in § 63.1506(c).

§ 63.1513 Equations for determining compliance.

(a) *THC emission limit.* Use Equation 6 to determine compliance with an emission limit for THC:

$$E = \frac{C \times MW \times Q \times K_1 \times K_2}{M_V \times P \times 10^6} \qquad \text{(Eq. 6)}$$

Where,

E = Emission rate of measured pollutant, kg/Mg (lb/ton) of feed;
C = Measured volume fraction of pollutant, ppmv;
MW = Molecular weight of measured pollutant, g/g-mole (lb/lb-mole): THC (as propane) = 44.11;
Q = Volumetric flow rate of exhaust gases, dscm/hr (dscf/hr);
K_1 = Conversion factor, 1 kg/1,000 g (1 lb/lb);
K_2 = Conversion factor, 1,000 L/m^3 (1 ft^3/ft^3);
M_v = Molar volume, 24.45 L/g-mole (385.3 ft^3/lb-mole); and
P = Production rate, Mg/hr (ton/hr).

(b) *PM, HCl and D/F emission limits.* Use Equation 7 to determine compliance with an emission limit for PM, HCl, and D/F:

$$E = \frac{C \times Q \times K_1}{P} \qquad \text{(Eq. 7)}$$

Where,

E = Emission rate of PM, HCl, or D/F, kg/Mg (lb/ton) of feed;
C = Concentration of PM, HCl, or D/F, g/dscm (gr/dscf);
Q = Volumetric flow rate of exhaust gases, dscm/hr (dscf/hr);
K_1 = Conversion factor, 1 kg/1,000 g (1 lb/7,000 gr); and
P = Production rate, Mg/hr (ton/hr).

(c) *HCl percent reduction standard.* Use Equation 8 to determine compliance with an HCl percent reduction standard:

$$\%R = \frac{L_i - L_o}{L_i} \times 100 \qquad \text{(Eq. 8)}$$

Where,

%R = Percent reduction of the control device;

L_i = Inlet loading of pollutant, kg/Mg (lb/ton); and

L_o = Outlet loading of pollutant, kg/Mg (lb/ton).

(d) *Conversion of D/F measurements to TEQ units.* To convert D/F measurements to TEQ units, the owner or operator must use the procedures and equations in "Interim Procedures for Estimating Risks Associated with Exposures to Mixtures of Chlorinated Dibenzo-p-Dioxins and -Dibenzofurans (CDDs and CDFs) and 1989 Update" (EPA–625/3–89–016), incorporated by reference in § 63.1502 of this subpart, available from the National Technical Information Service (NTIS), 5285 Port Royal Road, Springfield, Virginia, NTIS no. PB 90–145756.

(e) *Secondary aluminum processing unit.* Use the procedures in paragraphs (e)(1), (2), and (3) or the procedure in paragraph (e)(4) of this section to determine compliance with emission limits for a secondary aluminum processing unit.

(1) Use Equation 9 to compute the mass-weighted PM emissions for a secondary aluminum processing unit. Compliance is achieved if the mass-weighted emissions for the secondary aluminum processing unit (E_{cPM}) is less than or equal to the emission limit for the secondary aluminum processing unit (L_{cPM}) calculated using Equation 1 in § 63.1505(k).

$$E_{C_{PM}} = \frac{\sum_{i=1}^{n}\left(E_{ti_{PM}} \times T_{ti}\right)}{\sum_{i=1}^{n}\left(T_{ti}\right)} \qquad \text{(Eq. 9)}$$

Where,

E_{cPM} = The mass-weighted PM emissions for the secondary aluminum processing unit;

E_{tiPM} = Measured PM emissions for individual emission unit i;

T_{ti} = The average feed rate for individual emission unit i during the operating cycle or performance test period; and

n=The number of emission units in the secondary aluminum processing unit.

(2) Use Equation 10 to compute the aluminum mass-weighted HCl emissions for the secondary aluminum processing unit. Compliance is achieved if the mass-weighted emissions for the secondary aluminum processing unit (E_{cHCl}) is less than or equal to the emission limit for the secondary aluminum processing unit (L_{cHCl}) calculated using Equation 2 in § 63.1505(k).

$$E_{C_{HCl}} = \frac{\sum_{i=1}^{n}\left(E_{ti_{HCl}} \times T_{ti}\right)}{\sum_{i=1}^{n}\left(T_{ti}\right)} \qquad \text{(Eq. 10)}$$

Where,

E_{cHCl} = The mass-weighted HCl emissions for the secondary aluminum processing unit; and

E_{tiHCl} = Measured HCl emissions for individual emission unit i.

(3) Use Equation 11 to compute the aluminum mass-weighted D/F emissions for the secondary aluminum processing unit. Compliance is achieved if the mass-weighted emissions for the secondary aluminum processing unit is less than or equal to the emission limit for the secondary aluminum processing unit ($L_{cD/F}$) calculated using Equation 3 in § 63.1505(k).

$$E_{C_{D/F}} = \frac{\sum_{i=1}^{n}\left(E_{ti_{D/F}} \times T_{ti}\right)}{\sum_{i=1}^{n}\left(T_{ti}\right)} \qquad \text{(Eq. 11)}$$

Where,

$E_{cD/F}$ = The mass-weighted D/F emissions for the secondary aluminum processing unit; and

$E_{tiD/F}$ = Measured D/F emissions for individual emission unit i.

(4) As an alternative to using the equations in paragraphs (e)(1), (2), and (3) of this section, the owner or operator may demonstrate compliance for a secondary aluminum processing unit by demonstrating that each existing group 1 furnace is in compliance with the emission limits for a new group 1 furnace in § 63.1505(i) and that each existing in-line fluxer is in compliance with the emission limits for a new in-line fluxer in § 63.1505(j).

§ 63.1514 [Reserved]

Notifications, Reports, And Records

§ 63.1515 Notifications.

(a) *Initial notifications.* The owner or operator must submit initial notifications to the applicable permitting authority as described in paragraphs (a)(1) through (7) of this section.

(1) As required by § 63.9(b)(1), the owner or operator must provide notification for an area source that subsequently increases its emissions such that the source is a major source subject to the standard.

(2) As required by § 63.9(b)(3), the owner or operator of a new or reconstructed affected source, or a source that has been reconstructed such that it is an affected source, that has an initial startup after the effective date of this subpart and for which an application for approval of construction or reconstruction is not required under § 63.5(d), must provide notification that the source is subject to the standard.

(3) As required by § 63.9(b)(4), the owner or operator of a new or reconstructed major affected source that has an initial startup after the effective date of this subpart and for which an application for approval of construction or reconstruction is required by § 63.5(d) must provide the following notifications:

(i) Intention to construct a new major affected source, reconstruct a major source, or reconstruct a major source such that the source becomes a major affected source;

(ii) Date when construction or reconstruction was commenced (submitted simultaneously with the application for approval of construction or reconstruction if construction or reconstruction was commenced before the effective date of this subpart, or no later than 30 days after the date construction or reconstruction commenced if construction or reconstruction commenced after the effective date of this subpart);

(iii) Anticipated date of startup; and

(iv) Actual date of startup.

(4) As required by § 63.9(b)(5), after the effective date of this subpart, an owner or operator who intends to construct a new affected source or reconstruct an affected source subject to this subpart, or reconstruct a source such that it becomes an affected source subject to this subpart, must provide notification of the intended construction or reconstruction. The notification must include all the information required for an application for approval of construction or reconstruction as required by § 63.5(d). For major sources, the application for approval of construction or reconstruction may be used to fulfill these requirements.

(i) The application must be submitted as soon as practicable before the construction or reconstruction is planned to commence (but no sooner than the effective date) if the construction or reconstruction commences after the effective date of this subpart; or

(ii) The application must be submitted as soon as practicable before startup but no later than 90 days after the effective date of this subpart if the construction or reconstruction had commenced and

initial startup had not occurred before the effective date.

(5) As required by § 63.9(d), the owner or operator must provide notification of any special compliance obligations for a new source.

(6) As required by § 63.9(e) and (f), the owner or operator must provide notification of the anticipated date for conducting performance tests and visible emission observations. The owner or operator must notify the Administrator of the intent to conduct a performance test at least 60 days before the performance test is scheduled; notification of opacity or visible emission observations for a performance test must be provided at least 30 days before the observations are scheduled to take place.

(7) As required by § 63.9(g), the owner or operator must provide additional notifications for sources with continuous emission monitoring systems or continuous opacity monitoring systems.

(b) *Notification of compliance status report.* Each owner or operator must submit a notification of compliance status report within 60 days after the compliance dates specified in § 63.1501. The notification must be signed by the responsible official who must certify its accuracy. A complete notification of compliance status report must include the information specified in paragraphs (a)(1) through (10) of this section. The required information may be submitted in an operating permit application, in an amendment to an operating permit application, in a separate submittal, or in any combination. In a State with an approved operating permit program where delegation of authority under section 112(l) of the CAA has not been requested or approved, the owner or operator must provide duplicate notification to the applicable Regional Administrator. If an owner or operator submits the information specified in this section at different times or in different submittals, later submittals may refer to earlier submittals instead of duplicating and resubmitting the information previously submitted. A complete notification of compliance status report must include:

(1) All information required in § 63.9(h). The owner or operator must provide a complete performance test report for each affected source and emission unit for which a performance test is required. A complete performance test report includes all data, associated measurements, and calculations (including visible emission and opacity tests).

(2) The approved site-specific test plan and performance evaluation test results for each continuous monitoring system (including a continuous emission or opacity monitoring system).

(3) Unit labeling as described in § 63.1506(b), including process type or furnace classification and operating requirements.

(4) The compliant operating parameter value or range established for each affected source or emission unit with supporting documentation and a description of the procedure used to establish the value (*e.g.*, lime injection rate, total reactive chlorine flux injection rate, afterburner operating temperature, fabric filter inlet temperature), including the operating cycle or time period used in the performance test.

(5) Design information and analysis, with supporting documentation, demonstrating conformance with the requirements for capture/collection systems in § 63.1506(c).

(6) If applicable, analysis and supporting documentation demonstrating conformance with EPA guidance and specifications for bag leak detection systems in § 63.1510(f).

(7) Manufacturer's specification or analysis documenting the design residence time of no less than 1 second for each afterburner used to control emissions from a scrap dryer/delacquering kiln/decoating kiln subject to alternative emission standards in § 63.1505(e).

(8) Manufacturer's specification or analysis documenting the design residence time of no less than 2 seconds and design operating temperature of no less than 1600 °F for each afterburner used to control emissions from a sweat furnace that is not subject to a performance test.

(9) Approved OM&M plan (including site-specific monitoring plan for each group 1 furnace with no add-on air pollution control device).

(10) Startup, shutdown, and malfunction plan, with revisions.

§ 63.1516 Reports.

(a) *Startup, shutdown, and malfunction plan/reports.* The owner or operator must develop and implement a written plan as described in § 63.6(e)(3) that contains specific procedures to be followed for operating and maintaining the source during periods of startup, shutdown, and malfunction, and a program of corrective action for malfunctioning process and air pollution control equipment used to comply with the standard. The owner or operator shall also keep records of each event as required by § 63.10(b) and record and report if an action taken during a startup, shutdown, or malfunction is not consistent with the procedures in the plan as described in § 63.6(e)(3). In addition to the information required in § 63.6(e)(3), the plan must include:

(1) Procedures to determine and record the cause of the malfunction and the time the malfunction began and ended; and

(2) Corrective actions to be taken in the event of a malfunction of a process or control device, including procedures for recording the actions taken to correct the malfunction or minimize emissions.

(b) *Excess emissions/summary report.* As required by § 63.10(e)(3), the owner or operator must submit semiannual reports within 60 days after the end of each 6-month period. Each report must contain the information specified in § 63.10(c). When no deviations of parameters have occurred, the owner or operator must submit a report stating that no excess emissions occurred during the reporting period.

(1) A report must be submitted if any of these conditions occur during a 6-month reporting period:

(i) The corrective action specified in the OM&M plan for a bag leak detection system alarm was not initiated within 1 hour.

(ii) The corrective action specified in the OM&M plan for a continuous opacity monitoring deviation was not initiated within 1 hour.

(iii) The corrective action specified in the OM&M plan for visible emissions from an aluminum scrap shredder was not initiated within 1 hour.

(iv) An excursion of a compliant process or operating parameter value or range (*e.g.*, lime injection rate or screw feeder setting, total reactive chlorine flux injection rate, afterburner operating temperature, fabric filter inlet temperature, definition of acceptable scrap, or other approved operating parameter).

(v) An action taken during a startup, shutdown, or malfunction was not consistent with the procedures in the plan as described in § 63.6(e)(3).

(vi) An affected source (including an emission unit in a secondary aluminum processing unit) was not operated according to the requirements of this subpart.

(vii) A deviation from the 3-day, 24-hour rolling average emission limit for a secondary aluminum processing unit.

(2) Each report must include each of these certifications, as applicable:

(i) For each thermal chip dryer: "Only unpainted aluminum chips were used as feedstock in any thermal chip dryer during this reporting period."

(ii) For each dross-only furnace: "Only dross was used as the charge

material in any dross-only furnace during this reporting period."

(iii) For each sidewell group 1 furnace with add-on air pollution control devices: "Each furnace was operated such that the level of molten metal remained above the top of the passage between the sidewell and hearth during reactive fluxing, and reactive flux, except for cover flux, was added only to the sidewell or to a furnace hearth equipped with an add-on air pollution control device for PM, HCl, and D/F emissions during this reporting period."

(iv) For each group 1 melting/holding furnace without add-on air pollution control devices and using pollution prevention measures that processes only clean charge material: "Each group 1 furnace without add-on air pollution control devices subject to emission limits in § 63.1505(i)(2) processed only clean charge during this reporting period."

(v) For each group 2 furnace: "Only clean charge materials were processed in any group 2 furnace during this reporting period, and no fluxing was performed or all fluxing performed was conducted using only nonreactive, non-HAP-containing/non-HAP-generating fluxing gases or agents, except for cover fluxes, during this reporting period."

(vi) For each in-line fluxer using no reactive flux: "Only nonreactive, non-HAP-containing, non-HAP-generating flux gases, agents, or materials were used at any time during this reporting period."

(3) The owner or operator must submit the results of any performance test conducted during the reporting period, including one complete report documenting test methods and procedures, process operation, and monitoring parameter ranges or values for each test method used for a particular type of emission point tested.

(c) *Annual compliance certifications.* For the purpose of annual certifications of compliance required by 40 CFR part 70 or 71, the owner or operator must certify continuing compliance based upon, but not limited to, the following conditions:

(1) Any period of excess emissions, as defined in paragraph (b)(1) of this section, that occurred during the year were reported as required by this subpart; and

(2) All monitoring, recordkeeping, and reporting requirements were met during the year.

§ 63.1517 Records

(a) As required by § 63.10(b), the owner or operator shall maintain files of all information (including all reports and notifications) required by the general provisions and this subpart.

(1) The owner or operator must retain each record for at least 5 years following the date of each occurrence, measurement, maintenance, corrective action, report, or record. The most recent 2 years of records must be retained at the facility. The remaining 3 years of records may be retained off site.

(2) The owner or operator may retain records on microfilm, computer disks, magnetic tape, or microfiche; and

(3) The owner or operator may report required information on paper or on a labeled computer disk using commonly available and EPA-compatible computer software.

(b) In addition to the general records required by § 63.10(b), the owner or operator of a new or existing affected source (including an emission unit in a secondary aluminum processing unit) must maintain records of:

(1) For each affected source and emission unit with emissions controlled by a fabric filter or a lime-injected fabric filter:

(i) If a bag leak detection system is used, the number of total operating hours for the affected source or emission unit during each 6-month reporting period, records of each alarm, the time of the alarm, the time corrective action was initiated and completed, and a brief description of the cause of the alarm and the corrective action(s) taken.

(ii) If a continuous opacity monitoring system is used, records of opacity measurement data, including records where the average opacity of any 6-minute period exceeds 5 percent, with a brief explanation of the cause of the emissions, the time the emissions occurred, the time corrective action was initiated and completed, and the corrective action taken.

(iii) If an aluminum scrap shredder is subject to visible emission observation requirements, records of all Method 9 observations, including records of any visible emissions during a 30-minute daily test, with a brief explanation of the cause of the emissions, the time the emissions occurred, the time corrective action was initiated and completed, and the corrective action taken.

(2) For each affected source with emissions controlled by an afterburner:

(i) Records of 15-minute block average afterburner operating temperature, including any period when the average temperature in any 3-hour block period falls below the compliant operating parameter value with a brief explanation of the cause of the excursion and the corrective action taken; and

(ii) Records of annual afterburner inspections.

(3) For each scrap dryer/delacquering kiln/decoating kiln and group 1 furnace, subject to D/F and HCl emission standards with emissions controlled by a lime-injected fabric filter, records of 15-minute block average inlet temperatures for each lime-injected fabric filter, including any period when the 3-hour block average temperature exceeds the compliant operating parameter value +14 °C (+25 °F), with a brief explanation of the cause of the excursion and the corrective action taken.

(4) For each affected source and emission unit with emissions controlled by a lime-injected fabric filter:

(i) Records of inspections at least once every 8-hour period verifying that lime is present in the feeder hopper or silo and flowing, including any inspection where blockage is found, with a brief explanation of the cause of the blockage and the corrective action taken, and records of inspections at least once every 4-hour period for the subsequent 3 days. If flow monitors, pressure drop sensors or load cells are used to verify that lime is present in the hopper and flowing, records of all monitor or sensor output including any event where blockage was found, with a brief explanation of the cause of the blockage and the corrective action taken;

(ii) If lime feeder setting is monitored, records of daily inspections of feeder setting, including records of any deviation of the feeder setting from the setting used in the performance test, with a brief explanation of the cause of the deviation and the corrective action taken.

(iii) If lime addition rate for a noncontinuous lime injection system is monitored pursuant to the approved alternative monitoring requirements in § 63.1510(v), records of the time and mass of each lime addition during each operating cycle or time period used in the performance test and calculations of the average lime addition rate (lb/ton of feed/charge).

(5) For each group 1 furnace (with or without add-on air pollution control devices) or in-line fluxer, records of 15-minute block average weights of gaseous or liquid reactive flux injection, total reactive flux injection rate and calculations (including records of the identity, composition, and weight of each addition of gaseous, liquid or solid reactive flux), including records of any period the rate exceeds the compliant operating parameter value and corrective action taken.

(6) For each continuous monitoring system, records required by § 63.10(c).

(7) For each affected source and emission unit subject to an emission

standard in kg/Mg (lb/ton) of feed/charge, records of feed/charge (or throughput) weights for each operating cycle or time period used in the performance test.

(8) Approved site-specific monitoring plan for a group 1 furnace without add-on air pollution control devices with records documenting conformance with the plan.

(9) Records of all charge materials for each thermal chip dryer, dross-only furnace, and group 1 melting/holding furnaces without air pollution control devices processing only clean charge.

(10) Operating logs for each group 1 sidewell furnace with add-on air pollution control devices documenting conformance with operating standards for maintaining the level of molten metal above the top of the passage between the sidewell and hearth during reactive flux injection and for adding reactive flux only to the sidewell or a furnace hearth equipped with a control device for PM, HCl, and D/F emissions.

(11) Operating logs for each in-line fluxer using no reactive flux materials documenting each flux gas, agent, or material used during each operating cycle.

(12) Records of all charge materials and fluxing materials or agents for a group 2 furnace.

(13) Records of monthly inspections for proper unit labeling for each affected source and emission unit subject to labeling requirements.

(14) Records of annual inspections of emission capture/collection and closed vent systems.

(15) Records for any approved alternative monitoring or test procedure.

(16) Current copy of all required plans, including any revisions, with records documenting conformance with the applicable plan, including:

(i) Startup, shutdown, and malfunction plan;

(ii) For major sources, OM&M plan; and

(iii) Site-specific secondary aluminum processing unit emission plan (if applicable).

(17) For each secondary aluminum processing unit, records of total charge weight, or if the owner or operator chooses to comply on the basis of aluminum production, total aluminum produced for each 24-hour period and calculations of 3-day, 24-hour rolling average emissions.

Other

§ 63.1518 Applicability of general provisions.

The requirements of the general provisions in subpart A of this part that are applicable to the owner or operator subject to the requirements of this subpart are shown in appendix A to this subpart.

§ 63.1519 Delegation of authority.

(a) In delegating implementation and enforcement authority to a State under section 112(d) of the CAA, the authorities contained in paragraph (b) of this section are retained by the Administrator and are not transferred to a State.

(b) Applicability determinations pursuant to § 63.1.

§ 63.1520 [Reserved]

BILLING CODE 6560–50–P

Table 1 to Subpart RRR--Emission Standards for New and Existing Affected Sources

Affected source/ Emission unit	Pollutant	Limit	Units
All new and existing affected sources and emission units that are controlled with a PM add-on control device and that choose to monitor with a COM; and all new and existing aluminum scrap shredders that choose to monitor with a COM or to monitor visible emissions	Opacity	10	percent
New and existing aluminum scrap shredder	PM	0.01	gr/dscf
New and existing thermal chip dryer	THC D/F[a]	0.80 2.50	lb/ton of feed μg TEQ/Mg of feed
New and existing scrap dryer/delacquering kiln/decoating kiln	PM HCl THC D/F[a]	0.08 0.80 0.06 0.25	lb/ton of feed lb/ton of feed lb/ton of feed μg TEQ/Mg of feed
Or			
Alternative limits if afterburner has a design residence time of at least 1 second and operates at a temperature of at least 1400 °F	PM HCl THC D/F[a]	0.30 1.50 0.20 5.0	lb/ton of feed lb/ton of feed lb/ton of feed μg TEQ/Mg of feed
New and existing sweat furnace	D/F[a]	0.80	ng TEQ/dscm @ 11% O_2[b]
New and existing dross-only furnace	PM	0.30	lb/ton of feed

New and existing in-line fluxer[c]	HCl PM	0.04 0.01	lb/ton of feed lb/ton of feed
New and existing in-line fluxer with no reactive fluxing		No limit	Work practice: no reactive fluxing
New and existing rotary dross cooler	PM	0.04	gr/dscf
New and existing clean furnace (Group 2)		No limit	Work practices: clean charge only and no reactive fluxing
New and existing group 1 melting/holding furnace (processing only clean charge)[c]	PM HCl	0.80 0.40 or 10	lb/ton of feed lb/ton of feed percent of the HCl upstream of an add-on control device
New and existing group 1 furnace[c]	PM HCl	0.40 0.40 or 10	lb/ton of feed lb/ton of feed percent of the HCl upstream of an add-on control device
	D/F[a]	15.0	μg TEQ/Mg of feed
New and existing group 1 furnace[c] with clean charge only	PM HCl	0.40 0.40 Or 10	lb/ton of feed lb/ton of feed percent of the HCl upstream of an add-on control device
	D/F[a]	No Limit	Clean charge only

New and existing secondary aluminum processing unit[a,d] (consists of all existing group 1 furnaces and existing in-line flux boxes at the facility, or all simultaneously constructed new group 1 furnaces and new in-line fluxers)	PM[e]	$L_{t_{PM}} = \frac{\sum_{i=1}^{n} (L_{i_{PM}} \times T_i)}{\sum_{i=1}^{n} (T_i)}$
	HCl[f]	$L_{t_{HCl}} = \frac{\sum_{i=1}^{n} (L_{i_{HCl}} \times T_i)}{\sum_{i=1}^{n} (T_i)}$
	D/F[g]	$L_{t_{D/F}} = \frac{\sum_{i=1}^{n} (L_{i_{D/F}} \times T_i)}{\sum_{i=1}^{n} (T_i)}$

[a] D/F limit applies to a unit at a major or area source.

[b] Sweat furnaces equipped with afterburners meeting the specifications of §63.1505(f)(1) are not required to conduct a performance test.

[c] These limits are also used to calculate the limits applicable to secondary aluminum processing units.

[d] Equation definitions: L_{iPM} = the PM emission limit for individual emission unit i in the secondary aluminum processing unit [kg/Mg (lb/ton) of feed]; T_i = the feed rate for individual emission unit i in the secondary aluminum processing unit; L_{tPM} = the overall PM emission limit for the secondary aluminum processing unit [kg/Mg (lb/ton) of feed]; L_{iHCl} = the HCl emission limit for individual emission unit i in the secondary aluminum processing unit [kg/Mg (lb/ton) of feed]; L_{tHCl} = the overall HCl emission limit for the secondary aluminum processing unit [kg/Mg (lb/ton) of feed]; $L_{iD/F}$ = the D/F emission limit for individual emission unit i [μg TEQ/Mg (gr TEQ/ton) of feed]; $L_{tD/F}$ = the overall D/F emission limit for the secondary aluminum processing unit [μg TEQ/Mg (gr TEQ/ton) of feed]; n = the number of units in the secondary aluminum processing unit.

[e] In-line fluxers using no reactive flux materials cannot be included in this calculation since they are not subject to the PM limit.

[f] In-line fluxers using no reactive flux materials cannot be included in this calculation since they are not subject to the HCl limit.

[g] Clean charge furnaces cannot be included in this calculation since they are not subject to the D/F limit.

BILLING CODE 6560–50–C

TABLE 2 TO SUBPART RRR.—SUMMARY OF OPERATING REQUIREMENTS FOR NEW AND EXISTING AFFECTED SOURCES AND EMISSION UNITS

Affected source/emission unit	Monitor type/operation/process	Operating requirements
All affected sources and emission units with an add-on air pollution control device.	Emission capture and collection system.	Design and install in accordance with Industrial Ventilation: A Handbook of Recommended Practice; operate in accordance with OM&M plan.[b]
All affected sources and emission units subject to production-based (lb/ton of feed) emission limits[a].	Charge/feed weight or Production weight.	Operate a device that records the weight of each charge; Operate in accordance with OM&M plan.[b]
Group 1 furnace, group 2 furnace, in-line fluxer and scrap dryer/delacquering kiln/decoating kiln.	Labeling	Identification, operating parameter ranges and operating requirements posted at affected sources and emission units; control device temperature and residence time requirements posted at scrap dryer/delacquering kiln/decoating kiln.
Aluminum scrap shredder with fabric filter.	Bag leak detector or	Initiate corrective action within 1-hr of alarm and complete in accordance with OM&M plan[b]; operate such that alarm does not sound more than 5% of operating time in 6-month period.
	COM or	Initiate corrective action within 1-hr of a 6-minute average opacity reading of 5% or more and complete in accordance with OM&M plan.[b]
	VE	Initiate corrective action within 1-hr of any observed VE and complete in accordance with the OM&M plan.[b]
Thermal chip dryer with afterburner	Afterburner operating temperature	Maintain average temperature for each 3-hr period at or above average operating temperature during the performance test.
	Afterburner operation	Operate in accordance with OM&M plan.[b]
	Feed material	Operate using only unpainted aluminum chips.
Scrap dryer/delacquering kiln/decoating kiln with afterburner and lime-injected fabric filter.	Afterburner operating temperature	Maintain average temperature for each 3-hr period at or above average operating temperature during the performance test.
	Afterburner operation	Operate in accordance with OM&M plan.[b]
	Bag leak detector or	Initiate corrective action within 1-hr of alarm and complete in accordance with the OM&M plan;[b] operate such that alarm does not sound more than 5% of operating time in 6-month period.
	COM	Initiate corrective action within 1-hr of a 6-minute average opacity reading of 5% or more and complete in accordance with the OM&M plan.[b]
	Fabric filter inlet temperature	Maintain average fabric filter inlet temperature for each 3-hr period at or below average temperature during the performance test +14 °C (+25 °F).
	Lime injection rate	Maintain free-flowing lime in the feed hopper or silo at all times for continuous injection systems; maintain feeder setting at level established during the performance test for continuous injection systems.
Sweat furnace with afterburner	Afterburner operating temperature	If a performance test was conducted, maintain average temperature for each 3-hr period at or above average operating temperature during the performance test; if a performance test was not conducted, and afterburner meets specifications of §63.1505(f)(1), maintain average temperature for each 3-hr period at or above 1600 °F.
	Afterburner operation	Operate in accordance with OM&M plan.[b]
Dross-only furnace with fabric filter	Bag leak detector or	Initiate corrective action within 1-hr of alarm and complete in accordance with the OM&M plan;[b] operate such that alarm does not sound more than 5% of operating time in 6-month period.
	COM	Initiate corrective action within 1-hr of a 6-minute average opacity reading of 5% or more and complete in accordance with the OM&M plan.[b]
	Feed/charge material	Operate using only dross as the feed material.
Rotary dross cooler with fabric filter	Bag leak detector or	Initiate corrective action within 1-hr of alarm and complete in accordance with the OM&M plan;[b] operate such that alarm does not sound more than 5% of operating time in 6-month period.
	COM	Initiate corrective action within 1-hr of a 6-minute average opacity reading of 5% or more and complete in accordance with the OM&M plan.[b]
In-line fluxer with lime-injected fabric filter (including those that are part of a secondary aluminum processing unit).	Bag leak detector or	Initiate corrective action within 1-hr of alarm and complete in accordance with the OM&M plan;[b] operate such that alarm does not sound more than 5% of operating time in 6-month period.
	COM	Initiate corrective action within 1-hr of a 6-minute average opacity reading of 5% or more and complete in accordance with the OM&M plan.[b]
	Lime injection rate	Maintain free-flowing lime in the feed hopper or silo at all times for continuous injection systems; maintain feeder setting at level established during performance test for continuous injection systems.

TABLE 2 TO SUBPART RRR.—SUMMARY OF OPERATING REQUIREMENTS FOR NEW AND EXISTING AFFECTED SOURCES AND EMISSION UNITS—Continued

Affected source/emission unit	Monitor type/operation/process	Operating requirements
	Reactive flux injection rate	Maintain reactive flux injection rate at or below rate used during the performance test for each operating cycle or time period used in the performance test.
In-line fluxer (using no reactive flux material).	Flux materials	Use no reactive flux.
Group 1 furnace with lime-injected fabric filter (including those that are part of a secondary aluminum processing unit).	Bag leak detector or	Initiate corrective action within 1-hr of alarm; operate such that alarm does not sound more than 5% of operating time in 6-month period; complete corrective action in accordance with the OM&M plan.[b]
	COM	Initiate corrective action within 1-hr of a 6-minute average opacity reading of 5% or more; complete corrective action in accordance with the OM&M plan.[b]
	Fabric filter inlet temperature	Maintain average fabric filter inlet temperature for each 3-hour period at or below average temperature during the performance test +14 &degC (+25 °F).
	Reactive flux injection rate	Maintain reactive flux injection rate (lb/hr) at or below rate used during the performance test for each furnace cycle.
	Lime injection rate	Maintain free-flowing lime in the feed hopper or silo at all times for continuous injection systems; maintain feeder setting at level established at performance test for continuous injection systems.
	Maintain molten aluminum level	Operate side-well furnaces such that the level of molten metal is above the top of the passage between sidewell and hearth during reactive flux injection, unless the hearth is also controlled.
	Fluxing in sidewell furnace hearth	Add reactive flux only to the sidewell of the furnace unless the hearth is also controlled.
Group 1 furnace without add-on controls (including those that are part of a secondary aluminum processing unit).	Reactive flux injection rate	Maintain reactive flux injection rate (lb/hr) at or below rate used during the performance test for each operating cycle or time period used in the performance test.
	Site-specific monitoring plan[c]	Operate furnace within the range of charge materials, contaminant levels, and parameter values established in the site-specific monitoring plan.
	Feed material (melting/holding furnace).	Use only clean charge.
Clean (group 2) furnace	Charge and flux materials	Use only clean charge. Use no reactive flux.

[a] Thermal chip dryers, scrap dryers/delacquering kilns/decoating kilns, dross-only furnaces, in-line fluxers and group 1 furnaces including melting/holding furnaces.
[b] OM&M plan—Operation, maintenance, and monitoring plan.
[c] Site-specific monitoring plan. Owner/operators of group 1 furnaces without control devices must include a section in their OM&M plan that documents work practice and pollution prevention measures, including procedures for scrap inspection, by which compliance is achieved with emission limits and process or feed parameter-based operating requirements. This plan and the testing to demonstrate adequacy of the monitoring plan must be developed in coordination with and approved by the permitting authority.

TABLE 3 TO SUBPART RRR.—SUMMARY OF MONITORING REQUIREMENTS FOR NEW AND EXISTING AFFECTED SOURCES AND EMISSION UNITS

Affected source/Emission unit	Monitor type/Operation/Process	Monitoring requirements
All affected sources and emission units with an add-on air pollution control device.	Emission capture and collection system.	Annual inspection of all emission capture, collection, and transport systems to ensure that systems continue to operate in accordance with ACGIH standards.
All affected sources and emission units subject to production-based (lb/ton of feed/charge) emission limits[a].	Feed/charge weight	Record weight of each feed/charge, weight measurement device or other procedure accuracy of ±1%[b]; calibrate according to manufacturers specifications, or at least once every 6 months.
Group 1 furnace, group 2 furnace, in-line fluxer, and scrap dryer/delacquering kiln/decoating kiln.	Labeling	Check monthly to confirm that labels are intact and legible.
Aluminum scrap shredder with fabric filter.	Bag leak detector or	Install and operate in accordance with "Fabric Filter Bag Leak Detection Guidance"[c]; record voltage output from bag leak detector.
	COM or	Design and install in accordance with PS–1; collect data in accordance with subpart A of 40 CFR part 63; determine and record 6-minute block averages.
	VE	Conduct and record results of 30-minute daily test in accordance with Method 9.
Thermal chip dryer with afterburner	Afterburner operating temperature	Continuous measurement device to meet specifications in §63.1510(g)(1); record average temperature for each 15-minute block; determine and record 3-hr block averages.
	Afterburner operation	Annual inspection of afterburner internal parts; complete repairs in accordance with the OM&M plan.

TABLE 3 TO SUBPART RRR.—SUMMARY OF MONITORING REQUIREMENTS FOR NEW AND EXISTING AFFECTED SOURCES AND EMISSION UNITS—Continued

Affected source/Emission unit	Monitor type/Operation/Process	Monitoring requirements
	Feed/charge material	Record identity of each feed/charge; certify feed/charge materials every 6 months.
Scrap dryer/ delacquering kiln/ decoating kiln with afterburner and lime injected fabric filter.	Afterburner operating temperature	Continuous measurement device to meet specifications in §63.1510(g)(1); record temperatures in 15-minute block averages; determine and record 3-hr block averages.
	Afterburner operation	Annual inspection of afterburner internal parts; complete repairs in accordance with the OM&M plan.
	Bag leak detector or	Install and operate in accordance with "Fabric Filter Bag Leak Detection Guidance"[c]; record voltage output from bag leak detector.
	COM	Design and install in accordance with PS–1; collect data in accordance with subpart A of 40 CFR part 63; determine and record 6-minute block averages.
	Lime injection rate	For continuous injection systems, inspect each feed hopper or silo every 8 hrs to verify that lime is free-flowing; record results of each inspection. If blockage occurs, inspect every 4 hrs for 3 days; return to 8-hr inspections if corrective action results in no further blockage during 3-day periode; record feeder setting daily.
	Fabric filter inlet temperature	Continuous measurement device to meet specifications in §63.1510(h)(2); record temperatures in 15-minute block averages; determine and record 3-hr block averages.
Sweat furnace with afterburner	Afterburner operating temperature	Continuous measurement device to meet specifications in §63.1510(g)(1); record temperatures in 15-minute block averages; determine and record 3-hr block averages.
	Afterburner operation	Annual inspection of afterburner internal parts; complete repairs in accordance with the OM&M plan.
Dross-only furnace with fabric filter	Bag leak detector or	Install and operate in accordance with "Fabric Filter Bag Leak Detection Guidance"[c]; record output voltage from bag leak detector.
	COM	Design and install in accordance with PS–1; collect data in accordance with subpart A of 40 CFR part 63; determine and record 6-minute block averages.
	Feed/charge material	Record identity of each feed/charge; certify charge materials every 6 months.
Rotary dross cooler with fabric filter	Bag leak detector or	Install and operate in accordance with "Fabric Filter Bag Leak Detection Guidance"[c]; record output voltage from bag leak detector.
	COM	Design and install in accordance with PS–1; collect data in accordance with subpart A of 40 CFR part 63; determine and record 6-minute block averages.
In-line fluxer with lime-injected fabric filter.	Bag leak detector or	Install and operate in accordance with "Fabric Filter Bag Leak Detection Guidance"[c]; record output voltage from bag leak detector.
	COM	Design and install in accordance with PS–1; collect data in accordance with subpart A of 40 CFR part 63; determine and record 6-minute block averages
	Reactive flux injection rate	Weight measurement device accuracy of ±1%[h]; calibrate according to manufacturer's specifications or at least once every 6 months; record time, weight and type of reactive flux added or injected for each 15-minute block period while reactive fluxing occurs; calculate and record total reactive flux injection rate for each operating cycle or time period used in performance test; or Alternative flux injection rate determination procedure per §63.1510(j)(5).
	Lime injection rate	For continuous injection systems, record feeder setting daily and inspect each feed hopper or silo every 8 hrs to verify that lime is free-flowing; record results of each inspection. If blockage occurs, inspect every 4 hrs for 3 days; return to 8-hour inspections if corrective action results in no further blockage during 3-day period.[d]
In-line fluxer using no reactive flux	Flux materials	Record flux materials; certify every 6 months for no reactive flux.
Group 1 furnace with lime-injected fabric filter.	Bag leak detector or	Install and operate in accordance with "Fabric Filter Bag Leak Detection Guidance"[c]; record output voltage from bag leak detector.
	COM	Design and install in accordance with PS–1; collect data in accordance with subpart A of 40 part CFR 63; determine and record 6-minute block averages.
	Lime injection rate	For continuous injection systems, record feeder setting daily and inspect each feed hopper or silo every 8 hours to verify that lime is free-flowing; record results of each inspection. If blockage occurs, inspect every 4 hours for 3 days; return to 8-hour inspections if corrective action results in no further blockage during 3-day period.[d]

TABLE 3 TO SUBPART RRR.—SUMMARY OF MONITORING REQUIREMENTS FOR NEW AND EXISTING AFFECTED SOURCES AND EMISSION UNITS—Continued

Affected source/Emission unit	Monitor type/Operation/Process	Monitoring requirements
	Reactive flux injection rate Weight measurement device accuracy of +1%b; calibrate every 3 months; record weight and type of reactive flux added or injected for each 15-minute block period while reactive fluxing occurs; calculate and record total reactive flux injection rate for each operating cycle or time period used in performance test; or.	
	Alternative flux injection rate determination procedure per §63.1510(j)(5)..	
	Fabric filter inlet temperature	Continuous measurement device to meet specifications in §63.1510(h)(2); record temperatures in 15-minute block averages; determine and record 3-hour block averages.
	Maintain molten aluminum level in sidewell furnace.	Maintain aluminum level operating log; certify every 6 months.
Group 1 furnace without add-on controls.	Fluxing in sidewell furnace hearth	Maintain flux addition operating log; certify every 6 months.
	Reactive flux injection rate	Weight measurement device accuracy of +1%[b]; calibrate according to manufacturers specifications or at least once every six months; record weight and type of reactive flux added or injected for each 15-minute block period while reactive fluxing occurs; calculate and record total reactive flux injection rate for each operating cycle or time period used in performance test.
	OM&M plan (approved by permitting agency).	Demonstration of site-specific monitoring procedures to provide data and show correlation of emissions across the range of charge and flux materials and furnace operating parameters.
	Feed material (melting/holding furnace).	
Record type of permissible feed/charge material; certify charge materials every 6 months..		
Clean (group 2) furnace	Charge and flux materials	Record charge and flux materials; certify every 6 months for clean charge and no reactive flux.

[a] Thermal chip dryers, scrap dryers/delacquering kilns/decoating kilns, dross-only furnaces, in-line fluxers and group 1 furnaces or melting/holding furnaces.
[b] Permitting agency may approve measurement devices of alternative accuracy, for example in cases where flux rates are very low and costs of meters of specified accuracy are prohibitive; or where feed/charge weighing devices of specified accuracy are not practicable due to equipment layout or charging practices.
[c] Non-triboelectric bag leak detectors must be installed and operated in accordance with manufacturers' specifications.
[d] Permitting agency may approve other alternatives including load cells for lime hopper weight, sensors for carrier gas pressure, or HCl monitoring devices at fabric filter outlet.

APPENDIX A TO SUBPART RRR.—GENERAL PROVISIONS APPLICABILITY TO SUBPART RRR

Citation	Requirement	Applies to RRR	Comment
§63.1(a)(1)–(4)	General Applicability	Yes.	
§63.1(a)(5)	.....	No	[Reserved].
§63.1(a)(6)–(8)	.....	Yes.	
§63.1(a)(9)	.....	No	[Reserved].
§63.1(a) (10)–(14)	.....	Yes.	
§63.1(b)	Initial Applicability Determination	Yes	EPA retains approval authority.
§63.1(c)(1)	Applicability After Standard Established	Yes.	
§63.1(c)(2)	.....	Yes	States have option to exclude area sources from title V permit program.
§63.1(c)(3)	.....	No	[Reserved].
§63.1(c)(4)–(5)	.....	Yes.	
§63.1(d)	.....	No	[Reserved].
§63.1(e)	Applicability of Permit Program	Yes.	
§63.2	Definitions	Yes	Additional definitions in §63.1503.
§63.3	Units and Abbreviations	Yes	
§63.4(a)(1)–(3)	Prohibited Activities	Yes.	
§63.4(a)(4)	.....	No	[Reserved]
§63.4(a)(5)	.....	Yes.	

APPENDIX A TO SUBPART RRR.—GENERAL PROVISIONS APPLICABILITY TO SUBPART RRR—Continued

Citation	Requirement	Applies to RRR	Comment
§ 63.4(b)–(c)	Circumvention/ Severability	Yes.	
§ 63.5(a)	Construction and Reconstruction—Applicability	Yes.	
§ 63.5(b)(1)	Existing, New, Reconstructed Sources—Requirements.	Yes.	
§ 63.5(b)(2)		No	[Reserved].
§ 63.5(b)(3)–(6)		Yes.	
§ 63.5(c)		No	[Reserved].
§ 63.5(d)	Application for Approval of Construction/ Reconstruction.	Yes.	
§ 63.5(e)	Approval of Construction/ Reconstruction	Yes.	
§ 63.5(f)	Approval of Construction/Reconstruction Based on State Review.	Yes.	
§ 63.6(a)	Compliance with Standards and Maintenance—Applicability.	Yes.	
§ 63.6(b)(1)–(5)	New and Reconstructed Sources—Dates	Yes.	
§ 63.6(b)(6)		No	[Reserved].
§ 63.6(b)(7)		Yes.	
§ 63.6(c)(1)	Existing Sources Dates	Yes	§ 63.1501 specifies dates.
§ 63.6(c)(2)		Yes.	
§ 63.6(c)(3)–(4)		No	[Reserved].
§ 63.6(c)(5)		Yes.	
§ 63.6(d)		No	[Reserved].
§ 63.6(e)(1)–(2)	Operation & Maintenance Requirements	Yes	§ 63.1510 requires plan.
§ 63.6(e)(3)	Startup, Shutdown, and Malfunction Plan	Yes.	
§ 63.6(f)	Compliance with Emission Standards	Yes.	
§ 63.6(g)	Alternative Standard	No	
§ 63.6(h)	Compliance with Opacity/VE Standards	Yes.	
§ 63.6(i)(1)–(14)	Extension of Compliance	Yes.	
§ 63.6(i)(15)		No	[Reserved].
§ 63.6(i)(16)		Yes.	
§ 63.6(j)	Exemption from Compliance	Yes.	
§ 63.7(a)–(h)	Performance Test Requirements—Applicability and Dates.	Yes	§ 63.1511 requires repeat tests every 5 years for major sources.
§ 63.7(b)	Notification	Yes.	
§ 63.7(c)	Quality Assurance/Test Plan	Yes.	
§ 63.7(d)	Testing Facilities	Yes.	
§ 63.7(e)	Conduct of Tests	Yes.	
§ 63.7(f)	Alternative Test Method	Yes.	
§ 63.7(g)	Data Analysis	Yes.	
§ 63.7(h)	Waiver of Tests	Yes.	
§ 63.8(a)(1)	Monitoring Requirements—Applicability	Yes.	
§ 63.8(a)(2)		Yes.	
§ 63.8(a)(3)		No	[Reserved]
§ 63.8(a)(4)		Yes	
§ 63.8(b)	Conduct of Monitoring	Yes.	
§ 63.8(c)(1)–(3)	CMS Operation and Maintenance	Yes.	
§ 63.8(c)(4)–(8)		Yes.	
§ 63.8(d)	Quality Control	Yes.	
§ 63.8(e)	CMS Performance Evaluation	Yes.	
§ 63.8(f)(1)–(5)	Alternative Monitoring Method	No	§ 63.1510(w) includes provisions for monitoring alternatives.
§ 63.8(f)(6)	Alternative to RATA Test	Yes.	
§ 63.8(g)(1)	Data Reduction	Yes.	
§ 63.8(g)(2)		No	§ 63.1512 requires five 6-minute averages for an aluminum scrap shredder.
§ 63.8(g)(3)–(5)		Yes.	
§ 63.9(a)	Notification Requirements—Applicability	Yes.	
§ 63.9(b)	Initial Notifications	Yes.	
§ 63.9(c)	Request for Compliance Extension	Yes.	
§ 63.9(d)	New Source Notification for Special Compliance Requirements.	Yes.	
63.9(e)	Notification of Performance Test	Yes.	
§ 63.9(f)	Notification of VE/Opacity Test	Yes.	
§ 63.9(g)	Additional CMS Notifications	Yes.	
§ 63.9(h)(1)–(3)	Notification of Compliance Status	Yes.	
§ 63.9(h)(4)		No	[Reserved].
§ 63.9(h)(5)–(6)		Yes.	
§ 63.9(i)	Adjustment of Deadlines	Yes.	
§ 63.9(j)	Change in Previous Information	Yes.	
§ 63.10(a)	Recordkeeping/Reporting—Applicability	Yes.	
§ 63.10(b)	General Requirements	Yes	§ 63.1517 includes additional requirements.

APPENDIX A TO SUBPART RRR.—GENERAL PROVISIONS APPLICABILITY TO SUBPART RRR—Continued

Citation	Requirement	Applies to RRR	Comment
§ 63.10(c)(1)	Additional CMS Recordkeeping	Yes.	
§ 63.10(c)(2)–(4)		No	[Reserved].
§ 63.10(c)(5)		Yes.	
§ 63.10(c)(6)		Yes.	
§ 63.10(c)(7)–(8)		Yes.	
§ 63.10(c)(9)		No	[Reserved].
§ 63.10(c) (10)–(13)		Yes.	
§ 63.10(c) (14)		Yes.	
§ 63.10(d)(1)	General Reporting Requirements	Yes.	
§ 63.10(d)(2)	Performance Test Results	Yes.	
§ 63.10(d)(3)	Opacity or VE Observations	Yes.	
§ 63.10(d)(4) –(5)	Progress Reports/Startup, Shutdown, and Malfunction Reports.	Yes.	
§ 63.10(e)(1)–(2)	Additional CMS Reports	Yes.	
§ 63.10(e)(3)	Excess Emissions/CMS Performance Reports	Yes.	
§ 63.10(e)(4)	COMS Data Reports	Yes.	
§ 63.10(f)	Recordkeeping/Reporting Waiver	Yes.	
§ 63.11(a)–(b)	Control Device Requirements	No	Flares not applicable.
§ 63.12(a)–(c)	State Authority and Delegations	Yes.	EPA retains authority for applicability determinations.
§ 63.13	Addresses	Yes.	
§ 63.14	Incorporation by Reference	Yes.	Chapters 3 and 5 of ACGIH Industrial Ventilation Manual for capture/collection systems.
§ 63.15	Availability of Information/Confidentiality	Yes.	

* * * * *

[FR Doc. 00–4143 Filed 3–22–00; 8:45 am]
BILLING CODE 6560–50–p

Categorical Exclusion Determination will be available in the docket for inspection or copying where indicated under **ADDRESSES.**

List of Subjects in 33 CFR Part 165

Harbors, Marine safety, Navigation (water), Reporting and record keeping requirements, Security measures, Waterways.

Temporary Regulation

For the reasons discussed in the preamble, the Coast Guard amends 33 CFR part 165 as follows:

PART 165—[AMENDED]

1. The authority citation for part 165 continues to read as follows:

Authority: 33 U.S.C. 1231; 50 U.S.C. 191, 33 CFR 1.05–1(g), 6.04–1, 6.04–6 and 160.5; 49 CFR 1.46.

2. A new temporary § 165.T–07–080 is added to read as follows:

§ 165.T07–080 Security Zone; Vieques Island, PR.

(a) *Location.* The following area is established as a security zone: An area of water and land measured from the mean high water line on the naval installation out to 3 nautical miles along the east end of Vieques Island extending from Santa Maria (18°09′29″ N, 065° 25′23″ W) due north 3 nautical miles to position 18°12′29″ N, 065°25′23″ W, then easterly around Vieques Island, remaining three nautical miles from the coast, to a point 3 nautical miles south of the eastern edge of Puerto Mosquito (18°02′34″ N, 065°26′26″ W) then due north to the eastern edge of Puerto Mosquito (18°05′34″ N, 065°26′26″ W), including the rocks, cays, and small islands within.

(b) *Regulations.*

(1) In accordance with the general regulations in § 165.33 of this part:

(i) No person or vessel may enter or remain in this zone without the permission of the District Commander or designated representatives,

(ii) All persons within this zone shall obey any direction or order of the District Commander or designated representatives,

(iii) The District Commander or designated representatives may take possession and control of any vessel in this zone,

(iv) The District Commander or designated representatives may remove any person, vessel, article or thing from this zone,

(v) No person may board, or take or place any article or thing on board, any vessel in this zone without the permission of the District Commander or designated representatives; and,

(vi) No person may take or place any article or thing upon any waterfront facility in this security zone without the permission of the District Commander or designated representatives.

(2) The District Commander or designated representatives may grant permission for individual vessels to enter or remain within this security zone when permitted by operational conditions and may place conditions upon that permission. Vessels permitted to enter or remain in this zone must radio the patrol commander upon entering and departing the zone.

(c) *Enforcement.* Vessels or persons violating this section are subject to the penalties set out in 50 U.S.C. 192 and 18 U.S.C. 3571:

(1) Seizure and forfeiture of the vessel;

(2) A monetary penalty of not more than $250,000; and

(3) Imprisonment for not more than 10 years.

(d) *Dates.* This section is effective from 12:01 a.m. May 4, 2000 until 11:59 p.m. May 13, 2000.

(e) *Authority.* In addition to the authority in part 165, this section is also authorized under authority of Executive Order 10173, as amended.

Dated: April 28, 2000.

G.W. Sutton,

Captain U.S. Coast Guard, Acting Commander, Seventh Coast Guard District,

[FR Doc. 00–11511 Filed 5–4–00; 11:18 am]

BILLING CODE 4910–15–P

ENVIRONMENTAL PROTECTION AGENCY

40 CFR Parts 9 and 63

[AD–FRL–6585–5]

RIN 2060–AE86

National Emission Standards for Hazardous Air Pollutants for Polyether Polyols Production; Synthetic Organic Chemical Manufacturing Industry; Epoxy Resins Production and Non-Nylon Polyamides Production; and Petroleum Refineries

AGENCY: Environmental Protection Agency (EPA).

ACTION: Direct final rule and final rule.

SUMMARY: The EPA is taking direct final action to amend the national emission standards for hazardous air pollutants (NESHAP) for Polyether Polyols Production; Synthetic Organic Chemical Manufacturing Industry (also known as Hazardous Organic NESHAP, or HON); Epoxy Resins Production and Non-Nylon Polyamides Production; and Petroleum Refineries. For all four of these NESHAP, this direct final rule amends the definition of *equipment leaks* to add the term "connectors" to the list of equipment that is subject to the equipment leak provisions in those NESHAP.

The remainder of this direct final rule corrects referencing errors and several equations which contained printing errors in the final NESHAP for Polyether Polyols Production (hereafter referred to as "subpart PPP"). This direct final rule amends the description of a process change and the description of excess emissions; the requirements pertaining to submission of a request for extension of a compliance date; the storage vessel monitoring requirements; the definition of the terms *epoxide, polyether polyol,* and *Group 2 wastewater stream;* the conditions required during performance testing for batch process vents; which compounds are considered to be organic hazardous air pollutants (HAPs) for the purposes of both the maintenance wastewater and the process wastewater requirements; the information requirements for start-up, shutdown, and malfunction reports; the dates on which initial notifications are due; and the reporting requirements for other reports to clarify those requirements.

In addition to the direct final rule, in compliance with the Paperwork Reduction Act (PRA), EPA is amending as a final rule the Office of Management and Budget (OMB) approval table to list the OMB control number issued under the PRA for information collection requirements for subpart PPP.

DATES: The amendments to 40 CFR part 9 are effective on May 8, 2000. The direct final rule amendments to 40 CFR part 63 are effective on July 7, 2000 without further notice, unless the EPA receives adverse comments by June 7, 2000, or by June 22, 2000 if a public hearing is requested. See the proposed rule in this issue of the **Federal Register** for information on the hearing. If we receive such comments, and those comments apply to an amendment, paragraph, or section of this rule, and that provision may be addressed separately from the remainder of the rule, we will withdraw only those provisions on which we received adverse comments. We will publish a timely withdrawal in the **Federal Register** indicating which provisions will become effective on July 7, 2000 and which provisions are being withdrawn.

ADDRESSES: *Comments.* Written comments should be submitted (in duplicate, if possible) to: Air and Radiation Docket and Information

I. Why Are We Publishing These Amendments as a Direct Final Rule?

In the direct final rule portion of this action, we are correcting printing and referencing errors. We are also revising and slightly reorganizing certain paragraphs, and we are making minor amendments to certain definitions. These changes provide clarification on a variety of provisions ranging from applicability to recordkeeping. In all instances, we believe that these changes have the potential to reduce the burden on both owners and operators of affected sources and on the State or local agency implementing the rule, although we are unable to quantify reductions in hours for these amendments. For these reasons, we view these amendments as noncontroversial and anticipate no adverse comments, and we are publishing these amendments in a direct final rule.

If an adverse comment applies to an amendment, paragraph, or section of this direct final rule, and that provision may be addressed separately from the remainder of the rule, we will withdraw only those provisions on which we received adverse comments. In the "Proposed Rules" section of this **Federal Register**, we are publishing a separate document that will serve as the proposal for any provisions in this direct final rule on which we receive adverse comments. The EPA will publish a timely withdrawal in the **Federal Register** indicating which provisions will become effective and which provisions are being withdrawn. If part or all of this direct final rule is withdrawn, all public comments received will be addressed in a subsequent final rule based on the proposal in the "Proposed Rules" section of this **Federal Register**. We will not institute a second comment period on the subsequent final rule. Any parties interested in commenting must do so at this time. The nature of the changes contained in this direct final rule are such that it will benefit both industry and the States for these changes to become effective sooner, rather than later, as will be described in more detail below.

II. What Amendments Are We Making To Reflect OMB Approval of the Information Collection Request (ICR) for the NESHAP for Polyether Polyols Production?

This final rule amends the table of currently approved Information Collection Request (ICR) control numbers issued by OMB. This final rule updates the table to list those information requirements promulgated under the NESHAP for Polyether Polyols Production, which appeared in the **Federal Register** on June 1, 1999 (64 FR 29420). The affected regulations are codified at 40 CFR part 63, subpart PPP. We will continue to present OMB control numbers in a consolidated table format to be codified in 40 CFR part 9 of the Agency's regulations and in each CFR volume containing EPA regulations. The table lists the section numbers with reporting and recordkeeping requirements and the current OMB control numbers. This listing of the OMB control numbers and their subsequent codification in the CFR satisfy the requirements of the Paperwork Reduction Act and OMB's implementing regulations at 5 CFR part 1320. The ICR itself was subject to public notice and comment prior to OMB's approval of the ICR. Further, because amendment of the table in part 9 is technical in nature, we believe that another notice and comment period for this amendment is unnecessary. For these reasons, we believe that there is good cause under the Administrative Procedure Act (5 U.S.C. § 553(b) to amend this table without prior notice and comment.

III. What Amendments Are We Making to the Equipment Leak Definition That Affect Subparts F, W, CC, and PPP?

In these rules, we are amending the definition of *equipment leak* in subparts F, W, CC, and PPP of 40 CFR part 63. In each of these NESHAP, the definition of *equipment leak* listed several sources from which emissions of organic HAP constitute a leak. However, "connectors" are not included in the list of sources of emissions that are included in the definition of the term *equipment leak* in any of those NESHAP.

Affected sources subject to any of those four subparts are required to comply with the NESHAP for equipment leaks (40 CFR part 63, subpart H). In subpart H, § 63.169 contains standards for pumps, valves, connectors, and agitators in heavy liquid service; instrumentation systems; and pressure relief devices in liquid service. Section 63.174 (of 40 CFR part 63, subpart H) contains standards for connectors in gas/vapor service and in light liquid service. The fact that there are specific provisions in subpart H applicable to connectors clearly demonstrates that we always intended emissions from connectors to be considered equipment leaks. In addition, the definition of *equipment* in § 63.161 of subpart H includes connectors, providing further evidence that the definition of *equipment leak* should include connectors. Therefore, we are amending the definition of *equipment leak* in subparts F, W, CC, and PPP by adding the term "a connector" to the list of equipment in each of those definitions.

IV. What Amendments Are We Making to Subpart PPP?

Although this action amends portions of four separate subparts of 40 CFR part 63 (*i.e.*, subparts F, W, CC, and PPP), the primary focus of the amendments in this action is subpart PPP, which was promulgated on June 1, 1999 (64 FR 29420). This direct final rule contains amendments and technical corrections to the requirements in subpart PPP.

Several equations in the promulgated version of subpart PPP were printed incorrectly. This direct final rule amends the erroneous symbols in equations numbered 1, 2, 4, 5, 7, 10, and 13, to produce the originally intended equations.

This direct final rule also corrects references in several sections of subpart PPP. References are being corrected in this direct final rule in the following paragraphs: § 63.1422(b); § 63.1426(d)(3)(ii); § 63.1428(g)(3)(i); § 63.1430(e)(1)(vi) and (vii); § 63.1432(h) and (l); § 63.1433(a)(5), (7), and (8); § 63.1435(c); § 63.1439(e)(5)(iv) and (e)(7)(ii), and in the definition of *Group 2 wastewater stream*.

Two terms which are used in subpart PPP but were not defined in the final rule were added to the list in § 63.1423(a) that incorporates the definitions from other subparts. Specifically, *oil-water separator or organic-water separator* and *responsible official* were added to the list and their definitions in subparts G and A, respectively, were referenced.

In addition, the June 1, 1999 final rule contained references to 40 CFR part 63, subpart I in both §§ 63.1422(h) and 63.1434(c). This was an error because subpart I does not apply to polyether polyols producers. Therefore, both §§ 63.1422(h) and 63.1434(c) are removed and reserved in this direct final rule.

The provisions in § 63.1420(g) specify how changes or additions to plant sites impact whether an affected source is a new affected source or an existing affected source. Paragraph (g)(2) in § 63.1420 addresses adding emission points or making process changes to an existing affected source. The provisions in § 63.1420(g)(2)(i) specify that a process change or addition to an existing affected source that meets the definition of reconstruction and that occurred after September 4, 1997 causes

inadequate, while the language in § 63.1433(a)(2) and § 63.1433(b)(1) is unnecessarily complicated and difficult to interpret. The amendments in this direct final rule should make those requirements much easier to follow.

This direct final rule also clarifies the conditions required during performance testing for process vents from batch unit operations. Section 63.1426, paragraph (c)(3)(i)(B), which contains requirements specific to process vents from batch unit operations, states that performance testing may be conducted during either absolute worst-case conditions or hypothetical worst-case conditions. However, § 63.1437(a)(1) which contains general performance testing requirements for all emission sources, lists only absolute worst-case conditions as an option for performance testing at process vents from batch unit operations. This direct final rule corrects § 63.1437(a)(1) by revising that paragraph to state that performance testing at both absolute and hypothetical worst-case conditions is acceptable for process vents from batch unit operations.

Additionally, this direct final rule amends the information requirements associated with start-up, shutdown, and malfunction reports in § 63.1439(b)(1)(ii). The promulgated NESHAP requires the start-up, shutdown, and malfunction report to include all of the information recorded under § 63.1439(b)(1)(i)(A) through (B), and to contain the name, title, and signature of the owner or operator, or other responsible official certifying the report's accuracy. However, this is a good deal more information than is required to be specified in the general provisions in § 63.10(d)(5)(i). We have decided that as long as the information recorded under § 63.1439(b)(1)(i)(A) through (B) is recorded, that information need not be submitted to the Administrator. Therefore, this direct final rule references the start-up, shutdown, and malfunction reporting requirements in § 63.10(d)(5)(i) and no longer includes such a long list of information to report under § 63.1439(b)(1)(ii).

This direct final rule also removes the requirement that existing sources submit an Initial Notification report. The promulgated rule lists two separate due dates in different sections of the rule for the Initial Notification report. Section 63.1439, paragraph (e)(3)(ii)(A), states that the due date for the Initial Notification report for existing sources is June 1, 2000, but Table 8 shows the date as 120 days after June 1, 1999. Neither of those two dates is appropriate, in that the first date is too soon after promulgation of subpart PPP, while the other date is too late, since it was after the due date of the Notification of Compliance Status report for equipment leaks (April 29, 2000, or 150 days after the December 1, 1999 compliance date). To be useful, the Administrator (or the delegated authorities) needs to receive the Initial Notification report with sufficient time to prepare for receipt of the Notification of Compliance Status reports. Since this direct final rule will not take effect until after the date that the Notification of Compliance Status report for equipment leaks is due for existing sources, we do not believe that the submittal of an Initial Notification report is beneficial. Therefore, we have removed all requirements related to the Initial Notification report for existing sources. The specific changes are to § 63.1439(e)(3) and Table 8 of subpart PPP.

This direct final rule also inserts some introductory language pertinent to the other reports that are due in § 63.1439(e)(7) and reorganizes and renumbers the subsections of that paragraph. We are amending Table 1 of subpart PPP to clarify that although § 63.10(d)(5)(i) from the general provisions applies to subpart PPP affected sources, § 63.10(d)(5)(ii) (which requires immediate start-up, shutdown, or malfunction reports) does not.

V. What Are the Administrative Requirements for These Rules?

A. Executive Order 12866

Under Executive Order 12866 (58 FR 51735, October 4, 1993), the EPA must determine whether the regulatory action is "significant" and therefore subject to OMB review and the requirements of the Executive Order. The Executive Order defines "significant regulatory action" as one that is likely to result in a rule that may:

(1) Have an annual effect on the economy of $100 million or more or adversely affect in a material way the economy, productivity, competition, jobs, the environment, public health or safety, or state, local, or tribal governments or communities;

(2) Create a serious inconsistency or otherwise interfere with an action taken or planned by another agency;

(3) Materially alter the budgetary impact of entitlements, grants, user fees, or loan programs or the rights and obligations of recipients thereof; or

(4) Raise novel legal or policy issues arising out of legal mandates, the President's priorities, or the principles set forth in the Executive Order.

Pursuant to the terms of Executive Order 12866, it has been determined that these amendments are not a "significant regulatory action" because they do not meet any of the above criteria. Consequently, these rules were not submitted to OMB for review under Executive Order 12866.

B. Executive Order 13132

Executive Order 13132, entitled "Federalism" (64 FR 43255, August 10, 1999) requires EPA to develop an accountable process to ensure "meaningful and timely input by State and local officials in the development of regulatory policies that have federalism implications." "Policies that have federalism implications" is defined in the Executive Order to include regulations that have "substantial direct effects on the States, on the relationship between the national government and the States, or on the distribution of power and responsibilities among the various levels of government." Under section 6 of Executive Order 13132, EPA may not issue a regulation that has federalism implications, that imposes substantial direct compliance costs, and that is not required by statute, unless the Federal government provides the funds necessary to pay the direct compliance costs incurred by State and local governments, or EPA consults with State and local officials early in the process of developing the regulation. The EPA also may not issue a regulation that has federalism implications and that preempts State law unless the Agency consults with State and local officials early in the process of developing the regulation.

This direct final rule does not have federalism implications. It will not have substantial direct effects on the States, on the relationship between the national government and the States, or on the distribution of power and responsibilities among the various levels of government, as specified in Executive Order 13132. Thus, the requirements of section 6 of Executive Order 13132 do not apply to this direct final rule.

C. Executive Order 13084

Under Executive Order 13084, EPA may not issue a regulation that is not required by statute, that significantly or uniquely affects the communities of Indian tribal governments, and that imposes substantial direct compliance costs on those communities, unless the Federal government provides the funds necessary to pay the direct compliance costs incurred by the tribal governments, or EPA consults with those governments. If EPA complies by

prepared by EPA (ICR No. 1811.01), but, at promulgation, that ICR had not yet been approved by OMB. However, since promulgation the OMB has approved the ICR, and this final rule amends the table of currently approved ICR control numbers issued by OMB and updates the table to accurately display those information requirements not previously approved. The information collection requirements that are made effective by this action under OMB control number 2060–0415 were contained in ICR number 1811.01.

Today's final rule will have no impact on the information collection burden estimates made previously. The direct final amendments clarify the intent of the subpart PPP and correct inadvertent omissions and minor drafting errors. Consequently, the ICR has not been revised.

H. National Technology Transfer and Advancement Act

Section 12(d) of the National Technology Transfer and Advancement Act of 1995 (NTTAA), Pub. L. 104–113, (15 U.S.C. 272 note), directs all Federal agencies to use voluntary consensus standards instead of government-unique standards in their regulatory activities unless to do so would be inconsistent with applicable law or would be otherwise impractical. Voluntary consensus standards are technical standards (*e.g.*, material specifications, test method, sampling and analytical procedures, business practices, etc.) that are developed or adopted by one or more voluntary consensus standards bodies. Examples of organizations generally regarded as voluntary consensus standards bodies include the American Society for Testing and Materials (ASTM), the National Fire Protection Association (NFPA), and the Society of Automotive Engineers (SAE). The NTTAA requires Federal agencies like EPA to provide Congress, through OMB, with explanations when the Agency decides not to use available and applicable voluntary consensus standards.

During the rulemaking, the Agency searched for voluntary consensus standards that might be applicable. The search has identified no applicable voluntary standards. Accordingly, the NTTAA requirement to use applicable voluntary consensus standards does not apply to these rules.

I. The Congressional Review Act

The Congressional Review Act, 5 U.S.C. § 801 *et seq.*, as added by the Small Business Regulatory Enforcement Fairness Act of 1996, generally provides that before a rule may take effect, the agency promulgating the rule must submit a rule report, which includes a copy of the rule, to each House of the Congress and to the Comptroller General of the United States. The EPA will submit a report containing this rule and other required information to the U.S. Senate, the U.S. House of Representatives, and the Comptroller General of the United States prior to publication of the rule in the **Federal Register**. A major rule cannot take effect until 60 days after it is published in the **Federal Register**. This action is not a "major rule" as defined by 5 U.S.C. § 804(2). This rule will be effective July 7, 2000.

List of Subjects

40 CFR Part 9

Environmental protection, Reporting and recordkeeping requirements.

40 CFR Part 63

Environmental protection, Hazardous substances, Intergovernmental relations, Reporting and recordkeeping requirements, Administrative practice and procedure, Air pollution control.

Dated: April 20, 2000.

Carol M. Browner,

Administrator,

For the reasons set out in the preamble, parts 9 and 63 of title 40, chapter I of the Code of Federal Regulations are amended as follows:

PART 9—[AMENDED]

1. The authority citation for part 9 continues to read as follows:

Authority: 7 U.S.C. 135 *et seq.*, 136–136y; 15 U.S.C. 2001, 2003, 2005, 2006, 2601–2671; 21 U.S.C. 331j, 346a, 348; 31 U.S.C. 9701; 33 U.S.C. 1251 *et seq.*, 1311, 1313d, 1314, 1318, 1321, 1326, 1330, 1342, 1344, 1345 (d) and (e), 1361; E.O. 11735, 38 FR 21243, 3 CFR, 1971–1975 Comp. p. 973; 42 U.S.C. 241, 242b, 243, 246, 300f, 300g, 300g–1, 300g–2, 300g–3, 300g–4, 300g–5, 300g–6, 300j–1, 300j–2, 300j–3, 300j–4, 300j–9, 1857 *et seq.*, 6901–6992k, 7401–7671q, 7542, 9601–9657, 11023, 11048.

2. Section 9.1 is amended by adding a new entry to the table in numerical order to read as follows:

§ 9.1 OMB approvals under the Paperwork Reduction Act.

* * * * *

40 CFR citation	OMB control no.
* * * * *	
National Emission Standards for Hazardous Air Pollutants for Source Categories [3]	
* * * * *	
63.1420–63.1439	2060–0415

[3] The ICRs referenced in this section of the table encompass the applicable general provisions contained in 40 CFR part 63, subpart A, which are not independent information collection requirements.

* * * * *

PART 63—[AMENDED]

3. The authority citation for part 63 continues to read as follows:

Authority: 42 U.S.C. 7401, *et seq.*

* * * * *

Subpart F—[AMENDED]

* * * * *

4. Section 63.101 is amended by revising the definition of *equipment leak*, to read as follows:

§ 63.101 Definitions.

* * * * *

Equipment leak means emissions of organic hazardous air pollutants from a connector, pump, compressor, agitator, pressure relief device, sampling connection system, open-ended valve or line, valve, surge control vessel, bottoms receiver, or instrumentation system in organic hazardous air pollutant service as defined in § 63.161.

* * * * *

Subpart W—[AMENDED]

5. Section 63.522 is amended by revising the definition of equipment leaks, to read as follows:

§ 63.522 Definitions.

* * * * *

Equipment leaks means emissions of hazardous air pollutants from a connector, pump, compressor, agitator, pressure relief device, sampling connection system, open-ended valve or line, or instrumentation system in organic hazardous air pollutant service.

* * * * *

Subpart CC—[AMENDED]

6. Section 63.641 is amended by revising the definition of *equipment leak*, to read as follows:

§ 63.641 Definitions.

* * * * *

which this subpart applies. These emission limitations shall not apply during periods of start-up, shutdown, or malfunction, except as provided in paragraphs (h)(3) and (4) of this section. During periods of start-up, shutdown, or malfunction, the owner or operator shall follow the applicable provisions of the start-up, shutdown, and malfunction plan required by § 63.6(e)(3). However, if a start-up, shutdown, malfunction, or period of nonoperation of one portion of an affected source does not affect the ability of a particular emission point to comply with the emission limitations to which it is subject, then that emission point shall still be required to comply with the applicable emission limitations of this subpart during the start-up, shutdown, malfunction, or period of nonoperation. For example, if there is an overpressure in the reactor area, a storage vessel that is part of the affected source would still be required to be controlled in accordance with the storage tank provisions in § 63.1432. Similarly, the degassing of a storage vessel would not affect the ability of a process vent to meet the emission limitations for process vents in §§ 63.1425 through 63.1430.

* * * * *

(4) During start-ups, shutdowns, and malfunctions when the emission limitations of this subpart do not apply pursuant to paragraphs (h)(1) through (3) of this section, the owner or operator shall implement, to the extent reasonably available, measures to prevent or minimize excess emissions to the extent practical. For purposes of this paragraph, the term "excess emissions" means emissions greater than those allowed by the emissions limitation which would apply during operational periods other than start-up, shutdown, and malfunction. The measures to be taken shall be identified in the applicable start-up, shutdown, and malfunction plan, and may include, but are not limited to, air pollution control technologies, recovery technologies, work practices, pollution prevention, monitoring, and/or changes in the manner of operation of the affected source. Use of back-up control techniques is not required, but is allowed, if available.

* * * * *

8. Section 63.1422 is amended by revising paragraph (b), by revising paragraph (e) introductory text, and removing and reserving paragraph (h) as follows:

§ 63.1422 Compliance dates and relationship of this rule to existing applicable rules.

* * * * *

(b) New affected sources that commence construction or reconstruction after September 4, 1997 shall be in compliance with this subpart upon initial start-up or by June 1, 1999, whichever is later.

* * * * *

(e) Pursuant to section 112(i)(3)(B) of the Act, an owner or operator may request an extension allowing the existing affected source up to 1 additional year to comply with section 112(d) standards. For purposes of this subpart, a request for an extension shall be submitted to the permitting authority as part of the operating permit application, or to the Administrator as a separate submittal, or as part of the Precompliance Report. Requests for extensions shall be submitted no later than 120 days prior to the compliance dates specified in paragraphs (b) through (d) of this section, or as specified elsewhere in this subpart. The dates specified in § 63.6(i) for submittal of requests for extensions shall not apply to this subpart.

* * * * *

(h) [Reserved]

9. Section 63.1423 is amended by adding in alphabetical order the terms *oil-water separator or organic-water separator* and *responsible official in paragraph (a)* and by revising the definitions of *epoxide, equipment leak, Group 2 wastewater stream,* and *polyether polyol in paragraph (b)* as follows:

§ 63.1423 Definitions.

(a) * * *

Oil-water separator or organic-water separator (subpart G)

* * * * *

Responsible official (subpart A)

* * * * *

(b) * * *

Epoxide means a chemical compound consisting of a three-membered cyclic ether. Only emissions of epoxides listed in Table 4 of this subpart (*i.e.*, ethylene oxide, propylene oxide, and epichlorohydrin) are regulated by the provisions of this subpart.

Equipment leak means emissions of organic HAP from a connector, pump, compressor, agitator, pressure relief device, sampling connection system, open-ended valve or line, valve, surge control vessel, bottoms receiver, or instrumentation system in organic HAP service.

* * * * *

Group 2 wastewater stream means any process wastewater stream at an existing affected source or new affected source that does not meet the definition (in this section) of a Group 1 wastewater stream.

* * * * *

Polyether polyol means a compound formed through the polymerization of EO or PO or other cyclic ethers with compounds having one or more reactive hydrogens (*i.e.*, a hydrogen atom bonded to nitrogen, oxygen, phosphorus, sulfur, etc.) to form polyethers (i.e., compounds with two or more ether bonds). This definition of *polyether polyol* excludes cellulose ethers (such as methyl cellulose, carboxymethyl cellulose, hydroxyethyl cellulose, hydroxy ethyl cellulose, and hydroxypropyl methyl cellulose) and materials regulated under 40 CFR part 63, subparts F, G, and H (the HON), such as glycols and glycol ethers.

* * * * *

10. Section 63.1426 is amended by:

a. Revising Equation 1 (in paragraph (c)(3)(i)(B)(*3*)(*i*));

b. Revising Equation 2 (in paragraph (c)(3)(ii)(A));

c. Revising Equations 4 and 5 (in paragraph (c)(5)(ii)(A));

d. Revising paragraph (d)(3)(ii); and

e. Revising Equation 7 in paragraph (e)(1).

The revisions read as follows:

§ 63.1426 Process vent requirements for determining organic HAP concentration, control efficiency, and HAP emission reduction for a PMPU.

* * * * *

(c) * * *

(3) * * *

(i) * * *

(B) * * *

(*3*) * * *

(*i*) * * *

$$E = \sum_{i=1}^{n} P_i MW_i \times \frac{(V)(t)}{(R)(T)} \times \frac{P_T}{P_T - \sum_{j=1}^{m} (P_j)} \qquad \text{[Equation 1]}$$

§ 63.1428 Process vent requirements for group determination of PMPUs using a nonepoxide organic HAP to make or modify the product.

* * * * *

(g) * * *

(3) * * *

(i) If the redetermination described in paragraph (g)(2) of this section indicates that the group status of the combination of process vents from batch unit operations in a PMPU that are associated with the use of nonepoxide organic HAP to make or modify the product changes from Group 2 to Group 1 as a result of the process change, the owner or operator shall submit a report as specified in § 63.1439(e)(6)(iii)(D)(*1*) and shall comply with Group 1 combination of batch process vents provisions in this subpart, as specified in § 63.1425(c)(1).

* * * * *

13. Section 63.1430 is amended by revising paragraphs (e)(1)(vi) and (vii) as follows:

§ 63.1430 Process vent reporting and recordkeeping requirements.

* * * * *

(e) * * *

(1) * * *

(vi) If the combination of all process vents from batch unit operations associated with the use of an organic HAP to make or modify the product is subject to the Group 1 batch process vent control requirements for nonepoxide HAP emissions from making or modifying the product in § 63.1425((c)(1), none of the records in paragraphs (e)(1)(i) through (v) of this section are required.

(vii) If the total annual emissions from the combination of process vents from batch unit operations associated with the use of an organic HAP to make or modify the product are less than 11,800 kg per year, only the records in paragraphs (e)(1)(i) and (ii) of this section are required.

* * * * *

14. Section 63.1432 is amended by revising paragraphs (h), (l), and (q) as follows:

§ 63.1432 Storage vessel provisions.

* * * * *

(h) When the HON storage vessel requirements in §§ 63.120(d)(3)(i), 63.120(d)(5), and 63.122(g)(2) use the term "range," the term "level" shall apply instead for the purposes of this subpart.

* * * * *

(l) When the HON Periodic Report requirements contained in § 63.152(c) are referred to in §§ 63.120 and 63.122, the Periodic Report requirements contained in § 63.1439(e)(6) shall apply for the purposes of this subpart.

* * * * *

(q) In addition to the records required by § 63.123, the owner or operator of each storage vessel that is complying with § 63.119(e) and that has an applicable monitoring plan in accordance with § 63.120(d)(2) that does not specify continuous monitoring, shall maintain records of all times when the storage tank is being filled (i.e., when the liquid level in the storage vessel is being raised). These records shall consist of documentation of the time when each filling period begins and ends.

15. Section 63.1433 is amended by:

a. Revising paragraph (a)(1);

b. Revising paragraph (a)(2);

c. Revising paragraph (a)(5);

d. Revising paragraph (a)(7);

e. Revising paragraph (a)(8); and

f. Revising paragraph (b)(1).

The revisions and additions read as follows:

§ 63.1433 Wastewater provisions.

(a) * * *

(1) Owners and operators of affected sources are not required to comply with the HON new source wastewater requirements in § 63.132(b)(1) and § 63.132(d) for the purposes of this subpart. Owners or operators of all new affected sources, as defined in this subpart, shall comply with the HON requirements for existing sources in §§ 63.132 through 63.149, with the exceptions noted in paragraphs (a)(2) through (20) of this section.

(2) The provisions of paragraphs (a)(2)(i), (ii), and (a)(10)(iii) of this section clarify the organic HAP that an owner or operator shall consider when complying with the requirements of §§ 63.132 through 63.149.

(i) Owners and operators are exempt from all requirements in §§ 63.132 through 63.149 that pertain solely and exclusively to organic HAP listed on Table 8 of 40 CFR part 63, subpart G.

(ii) When the HON requirements in §§ 63.132 through 63.149 refer to Table 9 compounds, the owner or operator is only required to consider compounds that meet the definition of organic HAP in § 63.1423 and that are listed in Table 9 of 40 CFR part 63, subpart G, for the purposes of this subpart.

(iii) When §§ 63.132 through 63.149 refer to compounds in Table 36 of 40 CFR part 63, subpart G, or compounds in List 1 or List 2 of Table 36 of 40 CFR part 63, subpart G, the owner or operator is only required to consider compounds that meet the definition of organic HAP in § 63.1423 and that are listed on Table 36 of 40 CFR part 63, subpart G, for the purposes of this subpart.

* * * * *

(5) When the HON process wastewater reporting requirements in § 63.146(a) require the submission of a request for approval to monitor alternative parameters according to the procedures specified in § 63.151(f) or (g), the owner or operator requesting to monitor alternative parameters shall follow the procedures specified in § 63.1439(f) for the purposes of this subpart.

* * * * *

(7) When §§ 63.132 through 63.149 refer to an "existing source," the term *existing affected source*, as defined in § 63.1420(a)(2), shall apply for the purposes of this subpart.

(8) When the HON requirements in §§ 63.132 through 63.149 refer to a "new source," the term *new affected source*, as defined in § 63.1420(a)(3), shall apply for the purposes of this subpart.

* * * * *

(b) * * *

(1) When the HON maintenance wastewater provisions in § 63.105(a) refer to "organic HAPs listed in Table 9 of subpart G of this part," the owner or operator is only required to consider compounds that meet the definition of *organic HAP* in § 63.1423 and that are listed in Table 9 of 40 CFR part 63, subpart G, for the purposes of this subpart.

* * * * *

16. Section 63.1434 is amended by removing and reserving paragraph (c).

17. Section 63.1435 is amended by revising paragraph (c) as follows:

§ 63.1435 Heat exchanger provisions.

* * * * *

(c) When the HON heat exchange system requirements in § 63.104(c)(3) specify the monitoring plan retention requirements, and when § 63.104(f)(1) refers to the record retention requirements in § 63.103(c)(1), the provisions of the general recordkeeping and reporting requirements in § 63.1439(a) and the applicable provisions of the General Provisions in 40 CFR part 63, subpart A, as specified in Table 1 of this subpart, shall apply for the purposes of this subpart.

* * * * *

18. Section 63.1437 is amended by revising paragraph (a)(1) introductory text as follows:

§ 63.1437 Additional requirements for performance testing.

(a) * * *

TABLE 1 OF SUBPART PPP.—APPLICABILITY OF GENERAL PROVISIONS TO SUBPART PPP AFFECTED SOURCES—Continued

Reference	Applies to subpart PPP	Explanation
63.1(a)(11)	Yes.	
63.1(a)(12)–(14)	Yes.	
63.1(b)(1)	No	§ 63.1420(a) contains specific applicability criteria.
63.1(b)(2)	Yes.	
63.1(b)(3)	Yes.	
63.1(c)(1)	Yes	Subpart PPP (this table) specifies the applicability of each paragraph in subpart A to subpart PPP.
63.1(c)(2)	No	Area sources are not subject to subpart PPP.
63.1(c)(3)	No	Reserved.
63.1(c)(4)	Yes.	
63.1(c)(5)	Yes	Except that affected sources are not required to submit notifications overridden by this table.
63.1(d)	No	Reserved.
63.1(e)	Yes.	
63.2	Yes	§ 63.1423 specifies those subpart A definitions that apply to subpart PPP.
63.3	Yes.	
63.4(a)(1)–(3)	Yes.	
63.4(a)(4)	No	Reserved.
63.4(a)(5)	Yes.	
63.4(b)	Yes.	
63.4(c)	Yes.	
63.5(a)(1)	Yes	Except the terms "source" and "stationary source" should be interpreted as having the same meaning as "affected source."
63.5(a)(2)	Yes.	
63.5(b)(1)	Yes	Except § 63.1420(g) defines when construction or reconstruction is subject to new source standards.
63.5(b)(2)	No	Reserved.
63.5(b)(3)	Yes.	
63.5(b)(4)	Yes	Except that the initial notification requirements in § 63.1439(e)(3) shall apply instead of the requirements in § 63.9(b).
63.5(b)(5)	Yes.	
63.5(b)(6)	Yes	Except that § 63.1420(g) defines when construction or reconstruction is subject to the new source standards.
63.5(c)	No	Reserved.
63.5(d)(1)(i)	Yes.	
63.5(d)(1)(ii)	Yes	Except that § 63.5(d)(1)(ii)(H) does not apply.
63.5(d)(1)(iii)	No	§ 63.1439(e)(5) and § 63.1434(e) specify notification of compliance status requirements.
63.5(d)(2)	No.	
63.5(d)(3)	Yes	Except § 63.5(d)(3)(ii) does not apply, and equipment leaks subject to § 63.1434 are exempt.
63.5(d)(4)	Yes.	
63.5(e)	Yes.	
63.5(f)(1)	Yes.	
63.5(f)(2)	Yes	Except that where § 63.9(b)(2) is referred to, the owner or operator need not comply.
63.6(a)	Yes.	
63.6(b)(1)	Yes.	
63.6(b)(2)	Yes.	
63.6(b)(3)	Yes.	
63.6(b)(4)	Yes.	
63.6(b)(5)	Yes.	
63.6(b)(6)	No	Reserved.
63.6(b)(7)	No.	
63.6(c)(1)	Yes	§ 63.1422 specifies the compliance date.
63.6(c)(2)	No.	
63.6(c)(3)	No	Reserved.
63.6(c)(4)	No	Reserved.
63.6(c)(5)	Yes.	
63.6(d)	No	Reserved.
63.6(e)	Yes	Except as otherwise specified for individual paragraphs (below), and § 63.6(e) does not apply to Group 2 emission points.
63.6(e)(1)(i)	No	This is addressed by § 63.1420(h)(4).
63.6(e)(1)(ii)	Yes.	
63.6(e)(1)(iii)	Yes.	
63.6(e)(2)	Yes.	
63.6(e)(3)(i)	Yes	For equipment leaks (subject to § 63.1434), the start-up, shutdown, and malfunction plan requirement of § 63.6(e)(3)(i) is limited to combustion, recovery, or recapture devices and is optional for other equipment. The start-up, shutdown, and malfunction plan may include written procedures that identify conditions that justify a delay of repair.[a]
63.6(e)(3)(i)(A)	Yes	This is also addressed by § 63.1420(h)(4).
63.6(e)(3)(i)(B)	Yes.	
63.6(e)(3)(i)(C)	Yes.	
63.6(e)(3)(ii)	Yes.	

TABLE 1 OF SUBPART PPP.—APPLICABILITY OF GENERAL PROVISIONS TO SUBPART PPP AFFECTED SOURCES—Continued

Reference	Applies to subpart PPP	Explanation
63.8(f)(4)(ii)	Yes.	
63.8(f)(4)(iii)	Yes.	
63.8(f)(5)(i)	Yes.	
63.8(f)(5)(ii)	No.	
63.8(f)(5)(iii)	Yes.	
63.8(f)(6)	No	Subpart PPP does not require CEMs.
63.8(g)	No	Data reduction procedures specified in § 63.1439(d) and (h); not applicable to equipment leaks.
63.9(a)	Yes.	
63.9(b)	No	The initial notification requirements are specified in § 63.1439(e)(3).
63.9(c)	Yes.	
63.9(d)	Yes.	
63.9(e)	No	§ 63.1437(a)(4) specifies notification deadline.
63.9(f)	No	Subpart PPP does not require opacity and visible emission standards.
63.9(g)	No.	
63.9(h)	No	§ 63.1439(e)(5) specifies notification of compliance status requirements.
63.9(i)	Yes.	
63.9(j)	No.	
63.10(a)	Yes.	
63.10(b)(1)	No	§ 63.1439(a) specifies record retention requirements.
63.10(b)(2)	No	Subpart PPP specifies recordkeeping requirements.
63.10(b)(3)	Yes.	
63.10(c)	No	§ 63.1439 specifies recordkeeping requirements.
63.10(d)(1)	Yes.	
63.10(d)(2)	No	§ 63.1439(e)(5) and (6) specify performance test reporting requirements; not applicable to equipment leaks.
63.10(d)(3)	No	Subpart PPP does not require opacity and visible emission standards.
63.10(d)(4)	Yes.	
63.10(d)(5)(i)	Yes	Except that reports required by § 63.10(d)(5)(i) shall be submitted at the same time as Periodic Reports specified in § 63.1439(e)(6). The start-up, shutdown, and malfunction plan, and any records or reports of start-up, shutdown, and malfunction do not apply to Group 2 emission points.
63.10(d)(5)(ii)	No.	
63.10(e)	No	§ 63.1439 specifies reporting requirements.
63.10(f)	Yes.	
63.11	Yes.	
63.12	Yes	Except that the authority of § 63.177 (for equipment leaks) will not be delegated to States.
63.13–63.15	Yes.	

[a] The plan, and any records or reports of start-up, shutdown, and malfunction do not apply to Group 2 emission points.

* * * * *

TABLE 4 OF SUBPART PPP.—KNOWN ORGANIC HAP FROM POLYETHER POLYOL PRODUCTS

Organic HAP/chemical name [CAS No.]
1,3 Butadiene (106990)
Epichlorohydrin (106898)
Ethylene Oxide (75218)
n-Hexane (110543)
Methanol (67561)
Propylene Oxide (75569)
Toluene (108883)

CAS No. = Chemical Abstracts Service Registry Number.

* * * * *

federal register

Friday
June 19, 1998

Part IV

Environmental Protection Agency

40 CFR Parts 63, 261, and 270
Hazardous Waste Combustors; Revised Standards; Final Rule

ENVIRONMENTAL PROTECTION AGENCY

40 CFR Parts 63, 261, and 270

[EPA F-98-RCSF-FFFFF; FRL-6110-3]

RIN 2050-AE01

Hazardous Waste Combustors; Revised Standards; Final Rule—Part 1: RCRA Comparable Fuel Exclusion; Permit Modifications for Hazardous Waste Combustion Units; Notification of Intent To Comply; Waste Minimization and Pollution Prevention Criteria for Compliance Extensions

AGENCY: Environmental Protection Agency.

ACTION: Final rule.

SUMMARY: On April 19, 1996, EPA proposed revisions for air emission standards for certain hazardous waste combustion units. Today's rule finalizes some elements of that proposal. These elements include a conditional exclusion from RCRA for fuels which are produced from a hazardous waste, but which are comparable to some currently used fossil fuels; a new RCRA permit modification provision which is intended to make it easier for facilities to make changes to their existing RCRA permits when adding air pollution control equipment or making other changes in equipment or operation needed to comply with the upcoming air emission standards; notification requirements for sources which intend to comply with the final rule; and allowances for extensions to the compliance period to promote the installation of cost effective pollution prevention technologies to replace or supplement emission control technologies for meeting the emission standards.

EFFECTIVE DATE: This rule is effective on June 19, 1998.

ADDRESSES: The public docket for this rulemaking is available for public inspection at EPA's RCRA Docket, located at Crystal Gateway, First Floor, 1235 Jefferson Davis Highway, Arlington, Virginia. The regulatory docket for this final rule contains a number of background materials. To obtain a list of these items, contact the RCRA Docket at 703-603-9230 and request the list of references in EPA Docket #F-98-RCSF-FFFFF.

FOR FURTHER INFORMATION CONTACT: The RCRA Hotline between 9:00 a.m.-6:00 p.m. EST, at 800-424-9346 (toll-free); 703-412-9810 (from Government phones or if in the Washington, D.C. local calling area); or 800-553-7672 (for the hearing impaired). For more detailed information on specific aspects of the rulemaking, contact Mary Jo Krolewski on the comparable fuel exclusion at (703) 308-7754, Tricia Buzzell on permit modifications at (703) 308-8632, James Lounsbury on waste minimization and pollution prevention at (703) 308-8463, David Hockey on the notification of intent to comply at (703) 308-8846, or by writing, to U.S. Environmental Protection Agency, Office of Solid Waste, Permits and State Programs Division, 401 M St., S.W. (Mailcode 5303W), Washington, D.C. 20460.

SUPPLEMENTARY INFORMATION: This rule is available on the Internet. Please follow these instructions to access the rule electronically:

From the World Wide Web (WWW), type either
http://www.epa.gov/epaoswer/hazwaste/combust/fastrack.

EPA's "Pollution Prevention Facility Planning Guide" (May, 1992; NTIS #PB92-213206) describes the series of analytical steps that are often used by companies to identify waste minimization measures. Additional EPA references include: "Waste Minimization Opportunity Assessment Manual (EPA 625/7-88/003, July 1988), Interim Final "Guidance to Hazardous Waste Generators on the Elements of a Waste Minimization Program In Place," (May 1993), "An Introduction to Environmental Accounting As a Business Management Tool" (EPA 742-R-95-001, June 1995), the "P2/Finance User's Manual: Pollution Prevention Financial Analysis and Cost Evaluation System for Lotus 1-2-3 (EPA 742-B-94-003, January 1994), and Enviro$ense, an electronic library of information on pollution prevention, technical assistance, and environmental compliance. Many of these and other documents can be accessed by contacting the RCRA Hotline toll-free at 1-800-424-9346. Enviro$ense can be accessed by contacting a system operator at (703) 908-2007, or on the Internet at http://wastenot.inel.gov/enviro-sense. Information on State waste minimization programs can be obtained through Enviro$ense, directly from the State pollution prevention program offices, or from the National Pollution Prevention Roundtable at E-mail address 75152.1416@compuserve.com, by phone at 202-466-7272 in Washington, D.C.

The official record for this action is kept in a paper format. Accordingly, EPA has transferred all electronic comments received into paper form and placed them into the official record, with all the comments received in writing. The official record is maintained at the address in the **ADDRESSES** section at the beginning of this document.

EPA's responses to comments have been incorporated in a "Response to Comments" document, which has been placed into the official record for this rulemaking. The major comments and responses are discussed in the Response to Comment sections of this preamble.

The contents of today's preamble are listed in the following outline:

I. Authority
II. Scope of Final Rule
III. Comparable Fuels Exclusion
A. EPA's Approach to Establishing Benchmark Constituent Levels
1. The Benchmark Approach
2. Selection of the Benchmark Fuels
B. Options for the Benchmark Approach
1. Selection of Percentile Level
2. Composite v. Individual Specifications
C. Parameters for the Comparable Fuel Specification
1. Physical Specifications
2. General Constituent Specifications
3. Individual Hazardous Constituent Specifications
D. Parameters for the Synthesis Gas Fuel Exclusion
1. Physical Specifications
2. General Constituent Specifications
3. Individual Hazardous Constituent Specifications
E. Meeting the Comparable Fuel Specifications
1. Potential Applicability of Today's Rule to Specific Waste Codes
2. General
3. Blending
4. Treatment
F. Meeting the Syngas Fuel Specifications
G. Sampling and Analysis
1. Use of Process Knowledge
2. Waste Analysis Plan
3. Methods to Analyze Comparable Fuels
4. Syngas Waste Analysis Plan and Analysis Methods
5. Non-detects
H. Notification, Certification, and Documentation
1. Who Must Make the Exclusion Notification
2. Notification Requirements
I. Exclusion Status
J. Recordkeeping
1. General
2. Off-site Shipment
K. Transportation and Storage
L. Comparable Fuels Exclusion and Waste Minimization
1. Introduction
2. Major Concerns of Commenters
IV. RCRA Permit Modifications for Hazardous Waste Combustion Units
A. Introduction
B. Overview
1. Background on RCRA Permit Modification Procedures
2. Shortcomings of the Current Procedures

3. How Today's Rule Impacts the Procedures
C. Discussion of RCRA Permit Modification Procedures for Facilities Coming Into Compliance With MACT Requirements
1. Summary of Proposed Options
2. Summary of Public Comments
3. Response to Comments and Discussion of Final Provisions
D. Summary of Public Comments
E. Response to Comments
F. RCRA Changes in Interim Status Procedures
V. Notification of Intent to Comply and Progress Report
A. Background
B. Summary of Final Provisions
C. Discussion of Public Comments and Final NIC Provisions
1. General
2. Purpose of the NIC
3. Timing
4. NIC Meeting
5. Relation Between NIC and Other Notification Requirements
D. Discussion of Public Comments and Progress Report
1. Overview
2. Summary of Progress Report Requirements
E. Certification
F. Extension of the Compliance Date
G. Sources Which Become Affected After the Effective Date of This Subpart
VI. Waste Minimization and Pollution Prevention
A. Overview
B. Background
C. Summary of Proposed Pollution Prevention/Waste Minimization Incentives and Comments Received
D. Waste Minimization Incentives Contained in Today's Rule
VII. State Authority
A. RCRA State Authorization
B. Program Delegation under the Clean Air Act
VIII. Administrative Requirements/ Compliance With Executive Order
A. Regulatory Impact Analysis Under Executive Order 12866
B. Regulatory Flexibility Act
C. Paperwork Reduction Act
D. Unfunded Mandates
IX. Submission to Congress and the General Accounting Office
X. Environmental Justice
A. Applicability of Executive Order 12898
B. Potential Effects
XI. Children's Health
XII. National Technology Transfer and Advancement Act

I. Authority

These regulations are being finalized under the authority of sections 1004, 1006, 2002, 3001, 3004, 3005, and 7004 of the Solid Waste Disposal Act of 1965, as amended, including amendments by the Resource Conservation and Recovery Act.

II. Scope of the Final Rule

On April 19, 1996, EPA proposed rules to control emissions of HAPs from hazardous waste-burning incinerators, cement kilns, and light weight aggregate kilns. (61 FR 17358) After promulgation of the proposal, the Agency issued the following notices of data availability (NODA): NODA 1 (Peer review and Comparable fuels)—August 23, 1996: 61 FR 43501; NODA 2 (Revised emissions database)—January 7, 1997: 62 FR 960; Continuous Emissions Monitoring Systems (CEMS) NODA—March 21, 1997: 62 FR 13775; NODA 3 (MACT standards and implementation)—May 2, 1997: 62 FR 24212; and NODA 4 (Comparable fuels data)—September 9, 1997: 62 FR 47402.

Today's final rule addresses four elements of the April 19, 1996 (61 FR 17358) proposal to revise the standards for hazardous waste combustors. The remaining issues of the proposal will be addressed in final rules in the near future.

III. Comparable Fuels Exclusion

Under this final rule, EPA is excluding from the regulatory definition of solid waste hazardous waste-derived fuels that meet specification levels comparable to fossil fuels for concentrations of hazardous constituents and for physical properties that affect burning.[1] The exclusion would apply to the comparable fuel from the point it is generated and would be claimed by the person generating the comparable fuel (which person can include a hazardous waste treater). With respect to the fuels, generators of the comparable fuel would have to comply with sampling and analysis, notification and certification, and recordkeeping requirements in order for their fuels to be excluded. The exclusion potentially applies to gaseous and liquid hazardous waste-derived fuels. However, this exclusion does not apply to solids or to used oil, which is subject to special standards under 40 CFR Part 279.

Today's rule is consistent with EPA's goal to develop a comparable fuel specification which is of use to the regulated community but assures that an excluded waste-derived fuel is similar in composition to commercially available fuel and therefore poses no greater risk than burning fossil fuel. Accordingly, EPA is using a "benchmark approach" to identify a specification that would ensure that constituent concentrations and physical properties of excluded waste-derived fuel are comparable to those of fossil fuels.

The rationale for the Agency's approach is that if a hazardous waste-derived fuel is comparable to a fossil fuel in terms of hazardous and other key constituents and has a heating value indicative of a fuel, EPA has discretion to classify such material as a fuel product, not as a waste. Given that a comparable fuel would have legitimate energy value and the same hazardous constituents in comparable concentrations to those in fossil fuel (and satisfies other parameters related to comparability as well), classifying such material as a fuel product and not as a waste promotes RCRA's resource recovery goals without creating any risk greater than those posed by the commonly used commercial fuels. Under these circumstances, EPA can permissibly classify a comparable fuel as a non-waste. See 46 FR 44971 (August 8, 1981) (exemption from Subtitle C regulation for spent pickle liquor used as a wastewater treatment agent in part because of its similarity in composition to the commercial acids that would be used in its place); 50 FR 49180, 49181, 49183 (November 29, 1985) (explanation of a similar type of benchmark approach in establishing used oil fuel specification); 53 FR at 31164 (August 18, 1988) (exemption for certain hazardous waste-derived fertilizers due to similarity to the commercial fertilizers that would be used in their place).

Put another way, EPA can reasonably determine that a material which is a legitimate fuel and which contains hazardous constituents at levels comparable to fossil fuels is not being "discarded" within the meaning of RCRA section 1004 (27). "Discarded" itself is an ambiguous term, see *American Petroleum Inst.* v. *EPA*, 906 F. 2d 729, 741 (D.C. Cir. 1990). EPA's interpretation that hazardous waste-derived fuels which are comparable to fossil fuels need not be considered to be "discarded" serves the statutory objective of encouraging resource recovery. RCRA section 1003 (a) (10). In addition, burning of such fuels does not present the element of discarding hazardous constituents through combustion that underlies the typical classification of hazardous waste-derived fuels as a solid waste. 50 Fed. Reg. at 629–630 (Jan. 4, 1985). This is because, as noted, hazardous constituent concentration levels are comparable to those in fossil fuels.

[1] We note that DOW Chemical Company (Dow) in a petition to the Administrator, dated August 10, 1995, specifically requested that the Agency develop a generic exclusion for "materials that are burned for energy recovery in on-site boilers which do not exceed the levels of fossil fuel constituents* * *." (Petition, at p.3). This final rule also responds to that petition.

The case law further makes clear that EPA may classify secondary materials as "discarded" based, at least in part, upon whether such materials may be considered part of the waste management problem. *American Mining Congress* v. *EPA*, 907 F. 2d 1179, 1186 (D.C. Cir. 1990). Today's rule contains conditions to assure that burning of comparable fuels will not become part of the waste management problem. The chief condition is limitation on burning to industrial furnaces (as defined in 260. 10), industrial and utility boilers, and hazardous waste incinerators. Another condition prevents specification limits for hazardous constituents being achieved by means of dilution, so that the total volume of hazardous constituents emitted from burning comparable fuels would remain comparable to those from burning fossil fuels. The rule also contains notification and record keeping conditions which assure that the fuels meet the specification and will be burned in the requisite type of unit, and that this can be verified objectively by third persons.

EPA notes that today's final rule is consistent with the main approach discussed in the Dow petition (see footnote 1 above), which also points out a number of benefits that would result from promulgating this type of exclusion: (1) Support for the statutory goal of promoting beneficial energy recovery and resource conservation; (2) reduction of unnecessary regulatory burden and allowing all parties to focus resources on higher permitting and regulatory priorities; and (3) demonstration of a common-sense approach to regulation. Dow's petition contained data on the chemical and physical aspects of the fuel for which the petition was submitted. Based on these data and additional data submitted during the comment period, it appears that the waste petitioned for exclusion by Dow meets the individual physical and chemical comparable fuel specifications set forth in this rule. Today's rule does not exclude Dow's wastestreams or other wastestreams for which commenters submitted data that may meet the specifications of the final rule. It remains the responsibility of the generator to comply with the specifications of the comparable fuel exclusion stipulated by the State RCRA implementing authority.

A. EPA's Approach to Establishing Benchmark Constituent Levels

1. The Benchmark Approach

EPA considered using risk to human health and the environment as the way to determine the scope and levels of a "clean fuels" specification. However, the Agency encountered several technical and implementation problems using a purely risk-based approach to develop a national rule. Specifically, EPA has insufficient data relating to the types of waste burned and the risks they pose to develop a fully protective and complete "clean fuels" exemption. EPA also does not have sufficient data to determine the relationship between the amount of "clean fuel" burned and emissions, especially of dioxins and other non-dioxin PICs. EPA also does not know how emissions (likely uncontrolled) at the multitude of actual facilities that would burn an excluded fuel would compare to emissions from the example facilities that EPA would use to derive a "clean fuel" specification. (Emissions and/or risks at a given facility could be higher than those of the example facilities given site-specific considerations.) Without considering all reasonable, possible emission scenarios, which is not feasible for the Agency at this time, the Agency is not prepared today to address these potential risks [2].

The Chemical Manufacturers Association (CMA) submitted a proposal to exempt certain "clean" liquid wastes from RCRA regulation. (61 FR at 17469) Unlike EPA's benchmark-based comparable fuel approach, the CMA approach would establish "clean fuel" specifications for mercury, LVM, and SVM metals based on the technology-based MACT emissions standards proposed for hazardous waste combustors on April 19, 1996. As just discussed above, EPA is concerned about using risk to establish a "clean fuel" specification. EPA does not have data available documenting that emissions from burning a "clean fuel" would not pose a significant risk for the potential combustion and management scenarios in which the clean fuel exclusion from RCRA might be used. Therefore, EPA will not be adopting CMA's proposal in today's rule, but may address aspects of the CMA concept in future actions if appropriate and feasible.

The Agency instead developed a comparable fuel specification, based on the level of hazardous and other constituents normally found in fossil fuels. EPA refers to this as the benchmark approach. For this approach, EPA set a comparable fuel specification such that concentrations of hazardous constituents in the comparable fuel could be no greater than the concentration of hazardous constituents normally occurring in commercial fossil fuels. Thus, EPA expects that the comparable fuel would pose no greater risk when burned than a fossil fuel and would at the same time be physically comparable to a fossil fuel, leading to the conclusion that EPA may classify these materials as products, not wastes. See proposal for more details (61 FR 17460, April 19, 1996).

Some commenters argued that by using a benchmark approach, EPA had failed to assess potential risks to human health and the environment resulting from the exclusion. Commenters argued that EPA cannot determine that there are no adverse risks by the comparison to fossil fuels. EPA disagrees with commenters conclusions concerning the need to determine absolute risk. In this final rule, EPA is setting a comparable fuel specification with concentrations of hazardous constituents no greater than the concentrations of hazardous constituents occurring in fossil fuels. Thus, EPA reasonably expects—based on the methodology used to establish the specification—that the comparable fuel will pose no greater risk when burned than a fossil fuel and concomitant energy recovery benefits will be realized from reusing the waste to displace fossil fuels. The Agency concludes it has discretion in exercising jurisdiction over hazardous waste-derived fuels that are essentially the same as fossil fuel, since there would likely not be environmental benefits from regulating those hazardous waste-derived fuels (i.e., burners would likely just choose to burn fossil fuels). Indeed, as explained below, many commercial fuels could be less "clean" than the comparable fuels, so that substitution of some commercial fuels could be a net deterrent. See 50 FR at 49186 (November 29, 1985) where EPA discussed similar considerations when developing a specification for used oil fuel. See also discussion above as to why such fuels need not be considered to be "discarded". EPA has therefore decided not to regulate comparable hazardous waste-derived fuels meeting the benchmark specifications as hazardous waste under RCRA.

Furthermore, the Agency notes that the comparable fuel exclusion promulgated today is the first phase in addressing the "clean fuels" issue. Although EPA has identified problems with commenters' alternatives, there is

[2] It is possible to determine on an individual basis that particular waste-derived fuel should be excluded from RCRA on risk-based grounds. See 63 FR at 18533 (April 15, 1998) where EPA finalized such an exclusion for a waste fuel which could be generated by the pulp and paper industry. However, EPA cautions that making such a demonstration is difficult (because of potential uncertainties regarding combustion conditions and exposure patterns) and resource-intensive for the Agency to evaluate, and would still involve rulemaking.

room for further expansion of the comparable or clean fuel concept. EPA will continue to work with the regulated community to identify areas to expand the approach taken in today's final rulemaking.

2. Selection of the Benchmark Fuels

Since commercially available fossil fuels are diverse, EPA considered a range of fuels upon which to base its benchmark fuel selection. Available fuels ranged from gases, such as natural gas and propane, to liquids (such as gasoline and fuel oils) to solids (such as coal, coke, and peat). The Agency proposed a benchmark based on liquid fossil fuels (gasoline, No.2 fuel oil, and No.6 fuel oil). (61 FR at 17462)

Commenters argued that EPA should consider solid fossil fuels in developing the benchmark specifications. Commenters believe that materials such as coal are fuels that are widely used throughout the U.S. and failing to consider these materials ignores legitimate fuels used by certain industries. EPA disagrees with commenters' requests to include solid fossil fuels in its benchmark specification. From an environmental standpoint, the comparable fuel specification, which would exclude a hazardous waste-derived fuel from RCRA subtitle C regulation, should not be based on fossil fuels that have high levels of toxic constituents that will not be destroyed or detoxified by burning (e.g., metals and halogens). Data show that solid fossil fuels have comparatively higher metal [3] and possibly halogen levels than liquid fossil fuels [4]. Metals and halogens are not destroyed in the combustion process unlike organic constituents which are commonly destroyed or detoxified through combustion. Comparison with this type of fuel could easily result in a least common denominator approach whereby a hazardous waste-derived fuel would be "comparable" if it was no more dangerous to burn than the most contaminated fossil fuels. Such "comparability" is not congruent with the overall objective of RCRA to protect human health and the environment and is inconsistent with the specific directive to regulate combustion of hazardous waste-derived fuels where necessary to protect human health and the environment. (RCRA section 3004(q)). Thus, while EPA has chosen to use a benchmark rather than a risk-based approach, the Agency has chosen benchmark fuels that, in general, have lower contaminant levels for constituents that are not destroyed. Therefore, in today's rule, EPA is not using solid fossil fuels as part of the comparative benchmark.

EPA also will not be using a gas fuels as benchmarks. Basing the comparable fuel specification on a gas fuel would be overly conservative and have no utility to the regulated industry. (The reader should note that EPA is promulgating an exclusion for a particular type of hazardous waste-derived fuel, namely a type of synthesis gas ("syngas") meeting particular specifications (see Section D below). This hazardous waste derived gas can be used as a fuel and an exclusion provides beneficial resource recovery.) Liquid fuels, on the other hand, are widely used by industry, readily combusted, and do not present the inconsistencies of solid or gaseous fuels. Simply put, the Agency, in assessing comparability, is not required to base a specification on either the most or least contaminated fossil fuels, but may reasonably choose a median, in this case, representative fuel oils. In this final rule, EPA is selecting only liquid fuels for its benchmark fuel specification.

With regard to liquid fuels, commenters argued that EPA should consider as benchmark fuels non-petroleum liquid based fuels such as turpentine and tall oil. One commenter recommended that EPA identify turpentine as a benchmark fuel because it has a very high Btu value and is used as a fuel (and a manufacturing feedstock) both within and outside the forest products industry. Another commenter pointed out that tall oil is not only used in commerce as a traditional fuel, but that EPA has previously noted that tall oil is a legitimate non-waste fuel under the BIF rule low risk waiver exemption (LRWE) and DRE trial burn exemptions (56 FR 7193, February 21, 1991).

While EPA is interested in establishing a broad-based benchmark of liquid fuels, EPA disagrees that turpentine should be included in the benchmark specification. Turpentine is not a widely used commercial fuel. There are no ASTM standards for turpentine fuel which specify the minimum properties which must be met for the product to be considered as a commercial fuel. By contrast, there are ASTM specifications for each of the petroleum fossil fuels EPA is using as a benchmark.

EPA does agree with the commenter that tall oil is used in commerce as a traditional fuel and could be used as a benchmark fuel. At the time of the proposal, EPA had no data on tall oil. The commenter did submit one set of data that EPA was unable to use because it did not meet EPA data quality standards. Therefore, at this time, EPA will not include tall oil in its benchmark fuels.

Finally, some commenters did not support the use of gasoline for setting comparable fuel specifications, because it is not typically utilized in industrial boilers and furnaces. Gasoline is typically limited used in internal combustion engines, and the commenter did not anticipate that industry or individuals will utilize hazardous waste-derived fuels in automobiles, trucks and buses. EPA disagrees that gasoline should be excluded as one of the benchmark fuels. The Agency notes that gasoline is a widely used, commercially available, liquid fuel and EPA does not believe that our selection is necessarily limited to fuel burned in boilers or industrial furnaces. EPA has chosen its benchmark fuels so that the resulting comparable fuel when substituted would have hazardous constituents lower than the fuel it replaces. However, because the comparable fuel will not be substituted for use in gasoline applications (the exclusion is restricted to air regulated stationary combustion units, see Section H below), the rationale for the inclusion of gasoline differs. The Agency believes that gasoline provides a reasonable upper boundary for volatile organics, which are fuel-worthy constituents. The Agency notes that unlike some solid fuels, gasoline has low concentrations of metals. When compared to lighter fuel oils (e.g., No. 2 fuel oil), the gasoline specification has higher specifications for only the detected volatile organics, which are readily burnable compounds.

B. Options for the Benchmark Approach

At proposal, EPA presented several options for deciding what fossil fuel(s) data to use as the benchmark. The options range from developing a suite of comparable fuel specifications based on individual benchmark fuels (i.e., gasoline, No. 2, No. 4, No. 6) to basing the specification on composite values derived from the analysis of all benchmark fuels. (61 FR at 17643).

EPA took comment on individual benchmark fuel specifications based on gasoline, No. 2, and No. 6 fuel oil, using the 90th percentile values for the basis of the individual specifications. Under this approach, individual fuel specification(s) could be implemented

[3] A smaller fraction of metals in coal partitions to emissions than for liquid fuels. Given that most potentially comparable fuels are liquids, allowing metals at the concentrations present in coal could result in substantially higher metals emissions.

[4] For further discussion see USEPA, "Final Technical Support Document for HWC MACT Standards, Development of Comparable Fuels Specifications", May 1998.

in one of two ways. First, a facility could use any of the individual benchmark specifications, without regard to what fuel it currently burns. The second approach is to link the comparable fuel specification to the type of fuel burned at the facility and being displaced by the comparable fuel. Under a composite fuel benchmark approach, EPA took comment on using: (1) The 90th percentile aggregate values for the benchmark fuels; and (2) the 50th percentile aggregate values for the benchmark fuels. (61 FR at 17643).

1. Selection of Percentile Level

To calculate benchmark specifications, EPA obtained 27 fossil fuel samples, comprised of eight gasoline, eleven No. 2, one No. 4, and seven No. 6 fuel oil samples. Due to the small sample sizes of each fuel type, EPA initially used a nonparametric rank order statistical approach to analyze the fuel data. Rank order involved ordering the data for each constituent from lowest to highest concentration, assigning each data point a percentile value from lowest to highest percentile, respectively. Results were then calculated from the data percentiles. Because there were different numbers of samples for each fuel type, EPA was concerned that the fuel with the largest number of samples would dominate the composite database. To address this issue, EPA's statistical analysis "normalized" the number of samples, i.e., treated each fuel type in the composite equally without regard to the number of samples taken.[5] See *Kennecott* v. *EPA*, 780 F.2d 445, 457 (4th Cir. 1985) (upholding this statistical methodology). The fuel samples were weighted equally because this weighting reflects the fact that benchmark fuels can be used interchangeably in stationary combustion units. In addition, as noted in the next section, equal weighting prevented over-estimation of either metals and semi-volatiles in No. 6 fuel oil or volatiles in the higher end fractions.

One commenter argued that EPA's proposed constituent-by-constituent comparison approach is flawed because it ignores the compounding effect of joint probability. The commenter has examined the rank order statistics technique EPA used and has concluded that the percentile values for the individual constituents must be set higher for all of them to meet the overall percentile value simultaneously. For example, a candidate comparable fuel taken from the same reservoir as a benchmark fuel would, because of random variability in constituent concentrations, have a 23 percent chance of "failing" a comparison to a benchmark (at the 90th percentile) that has 14 constituents above the detection limits. Thus the commenter argued that the proposed constituent-by-constituent comparison would have little utility to the regulated community.

While EPA believes there is some interdependence among individual constituents and that the principle of joint probability cannot be strictly applied, EPA is inclined to agree with the commenter. At the time of proposal, EPA believed that a 50th percentile analysis represented a midpoint of potential benchmark fuels that were studied. EPA also believed that a 90th percentile analysis represented a reasonable upper bound of what is found in all fuels capturing variability both with each fuel category and in the case of the composite approach, between categories. However, when the individual fuel samples were compared to the benchmark specifications, EPA found that at the 50th percentile composite *none* of the virgin fuel samples met the specification and at the 90th percentile composite only 40 percent met the specification. This appears to confirm the commenter's concern over joint probability, and reflects on the degree to which the comparable fuels exclusion would actually be useable. It was EPA's goal to base the comparable fuel specifications on the 99th percentile, a level near which 90 percent of EPA's individual fuel samples would meet the specification. However, the size of the data base precluded the calculating of a 99th percentile constituent specification. Therefore, in this case, the Agency used the largest measured value to approximate an upper percentile. In the future, EPA may choose alternative methods of evaluating any new data that may be submitted suggesting that these specifications need to be modified. After re-calculating the specification taking joint probability into account, the composite at the largest value more closely represents what EPA intended to propose with the 90th percentile, a reasonable upper bound that is also useable in practice. The 90th percentile closely represents what EPA intended with the proposed 50th percentile, i.e., a midpoint.

Some commenters did support the 50th percentile because they argued it was more protective. The majority of commenters supported the 90th percentile and some commenters argued for the use of a higher percentile, i.e., 95th or 99th. Because none of EPA's own fuel samples meet this specification, the 50th percentile is overly conservative. If EPA selected the 50th percentile, comparable fuels would have to be "cleaner" than *all* commercial liquid fuels (or at least all of those in the Agency's current database), which would greatly restrict the utility of the provision. Also, with such a strict approach, additional quantities of virgin oils with higher contaminant levels would be burned, leading to greater emissions than if a higher percentile was chosen. Therefore, EPA agrees with commenters that a higher percentile better reflects the liquid fossil fuels burned nationally and is a better benchmark.

After considering the issue of joint probability, EPA has decided to promulgate a composite specification based on the largest measured value to approximate what 90 percent of individual benchmark fuels are likely to meet. This approach has the virtue of being representative of a range of fuels that are burned nationally in combustion devices.

Based on the proposal, EPA had the option of choosing between an individual fuel specification approach and a composite approach. The majority of commenters supported using the composite specification plus the suite of individual fuel specifications that could be used irrespective of the fuel displaced.

The composite approach has advantages over the individual fuel specification approach. One issue associated with the single fuel specification approach is that gasoline has relatively higher levels of volatile organic compounds while No. 6 fuel oil has higher levels of semi-volatile organic compounds and metals. If a potential comparable fuel were to have a volatile organic constituent concentration below the gasoline specification but higher than the others and a particular metal concentration lower than the No. 6 fuel oil specification but higher than gasoline, it would not be a comparable fuel since it meets no single specification entirely. Therefore, EPA is concerned that establishing specifications under this

[5] For the gasoline sample analysis, the resulting detection limits for volatile organic compounds were an order of magnitude higher than the other fuel specifications. EPA believes analysis of comparable fuels will more likely result in detection limits much lower than gasoline and similar to those associated with analysis of fuel oils. To address this issue, EPA has performed an analysis of a fuel oil-only composite (one which does not include gasoline in the composite) to use as a surrogate for the volatile organic gasoline non-detect values. Therefore, the volatile organic gasoline non-detect values used in the development of the composite and individual gasoline specification were based on this fuel oil-only composite.

option would significantly limit the utility of the exclusion without any obvious advantage in terms of the technical basis of the specifications themselves.

Compositing all the fuels has the advantage that it may better reflect the range of fuel choices and potential for fuel-switching available nationally to burners. A facility would be allowed to use the composite fuel specification regardless of which fuel(s) it burns. In addition, the composite well represents the constituent makeup of liquid fossil fuels currently burned nationally. Because allowing individual specifications would unnecessarily complicate the Agency's implementation oversight, EPA has decided not to allow the individual specifications as an alternative. Furthermore, EPA notes that because it has chosen to promulgate constituent standards for comparable fuels based on the largest measured value, the composite approach will provide industry with greater flexibility in using the exclusion. A composite specification provides a simpler regulatory framework, which would facilitate implementation of the exclusion. Therefore, in this final rule, EPA is promulgating a composite specification for comparable fuels.

C. Parameters for the Comparable Fuel Specification

Using the benchmark approach discussed above, EPA is promulgating a set of technical specifications. The specifications address the following[6]:

(1) Physical specifications:

—Heating value (BTU/lb);

—Kinematic viscosity (centistokes, cs, as-fired),

(2) General constituent specifications for:

—Total Halogens (ppmw, expressed as Cl)

—Nitrogen, total (ppmw), and

(3) Individual hazardous constituent specifications, for:

—Individual Metals (ppmw),

—Individual Appendix VIII Toxic Organics (ppmw)

The constituent specifications and heating value would apply to both gases and liquids. The kinematic viscosity would not apply to gases. (See Section D, below, which discusses synthesis gases specifically.)

1. Physical Specifications

a. *Heating Value.* The Agency is concerned with the acceptability of the potential fuel and wants to ensure that comparable fuels have a legitimate use as a fuel. As discussed below, the comparable fuels exclusion only applies to waste fuels that are ultimately burned. In addition, the Agency has relied on a heating value of 5,000 Btu/lbm (11,500 J/g) as a reasonable heating value specification for determining if a waste is being burned for energy recovery; that is, wastes with this Btu value or higher are considered to be burned for energy recovery. (See § 266.103(c)(2)(ii). 50 FR at 49173n.24 (November 29, 1985)).[7] This type of minimum Btu value specification is appropriate here as well as for the overall fuel (note that this is a different issue than finding the appropriate Btu value by which to correctly determine if the individual constituent specifications are being met, discussed below). EPA is thus setting a 5,000 Btu/lbm limit today as a minimum heating value for a comparable fuel to ensure that comparable fuels are in fact legitimate fuels. See § 261.38(a)(1)(i).

b. *Kinematic viscosity.* Viscosity is an important specification to help ensure that a comparable fuel is as readily burnable as the benchmark fuel. Viscosity is important to the proper atomization and feed to the burning device and is an important design specification of the burner assembly. EPA proposed two options for setting a viscosity specification: (1) Using a value derived from the analyses EPA conducted; or (2) using the ASTM viscosity specification for fuel oil. (61 FR at 17465). Under the ASTM option for the composite fuel viscosity specification, EPA took comment on using the second highest ASTM viscosity specification. This would have the effect of not considering the extremes, viscosity of No. 6 fuel oil (50.0 cs at 100°C) and using as the specification the viscosity of No. 4 fuel oil (24.0 cs at 40°C).

Given the choice of EPA-derived viscosity values and ASTM values, the majority of commenters supported the use of the ASTM physical specification for viscosity. In addition, several commenters argued that the viscosity specification should apply at the point (temperature) that the fuel is fired rather than the point of generation. Commenters pointed out that it is common practice to reduce the as-fired viscosity to promote good atomization and combustion through blending with less viscous fuels or by warming the fuel to above-ambient temperature before firing. For example, while No. 6 fuel oil has an elevated viscosity at ambient conditions, it is typically stored and fired at temperatures which promote atomization and combustion.

EPA is persuaded by commenters that basing our viscosity specification on No. 4 fuel oil would possibly limit comparable fuels similar to No. 6 fuel oil (one of the benchmark fuels) from qualifying for the exclusion. EPA agrees that the viscosity specification should be based on ASTM standard for No. 6 fuel oil (50 cs at 100°C). The ASTM standard represents the typical temperature and viscosity at which No.6 fuel oil is fired. Thus, it is appropriate for a comparable fuel, when fired, to have the same viscosity as No. 6 fuel when fired. This will allow for a specification that is achievable for all liquid fossil fuels.

Therefore, in this final rule, EPA is promulgating a kinematic viscosity specification of 50 cs, as-fired . The specification for viscosity will only pertain to non-gaseous fuels, because gases are inherently less viscous than liquids. See § 261.38(a)(1)(ii).

c. *Flashpoint (proposed, but not promulgated).* EPA proposed two options for setting a minimum flashpoint specification: (1) Using a value derived from the analyses EPA conducted; or (2) using the requirements for flashpoint specified by ASTM. Under the ASTM option for the composite fuel flashpoint specification, EPA took comment on using the second lowest flash point as the specifications. (61 FR at 17465). This would have the effect of not considering the extremes, flash point of gasoline (−42°C) and using as the specification the flash point of No. 2 fuel oil (38°C).

Several commenters opposed setting specifications for flash point. Commenters argued that DOT and OSHA have developed and promulgated regulations that control the hazards such materials can pose. Commenters also argued that the specification would preclude burning materials that are normally fuels such as methanol. EPA agrees with commenters that DOT (49 CFR Parts 171 through 180) and OSHA (29 CFR Part 1910) regulations adequately address the transportation and handing of low flashpoint material and setting a flashpoint specification under RCRA would be unnecessarily redundant with no ostensible gain in protectiveness. In addition, by limiting the exclusion to units subject to Federal/State/local air emission requirements, comparable fuels will be burned in units subject to OSHA requirements. (See Section H, below,

[6] Note that ppmw is an alternate way of expressing the units mg/kg.

[7] The 5,000 Btu/lb measure is not, however, an unvarying measure of legitimate versus insufficient energy recovery. See, e.g., 48 FR at 1158 (March 16, 1983).

which discusses this requirement.) Therefore, EPA is not establishing a flashpoint specification for the final rule.

2. General Constituent Specifications

In determining general constituent specifications and in determining individual hazardous constituent specifications (see following discussion), the Agency is concerned with the overall environmental loading. Comparable fuels could have lower heating value than the fossil fuels they would displace. In these situations, more comparable fuel would be burned to achieve the same heat input, with the result that more hazardous constituents would be fired and emitted (e.g., halogenated organic compounds and metals) than if fossil fuel were to be burned. This would lead to greater environmental loading of potentially toxic substances, which is not in keeping with the intent of the comparable fuels exclusion nor with RCRA's overall protectiveness goals.

To address environmental loading, the approach used in this final rule is to establish a minimum heating value specification comparable to the BTU content of the benchmark fossil fuel(s). The Agency is establishing the specification(s) for comparable fuels at a heating value of 10,000 BTU/lb, which is near to what liquid commercial fuels contain.[8] EPA chose 10,000 BTU/lb because it is typical of current hazardous waste burned for energy recovery.[9] However, candidate comparable fuels when generated initially can have heating values very different than 10,000 BTU/lb. Therefore, under this final rule, when determining whether a waste meets the comparable fuel constituent specifications, a generator must first correct the constituent levels in the candidate waste to a 10,000 BTU/lb heating value basis prior to comparing them to the comparable fuel specification tables. In this way, a facility that burns a comparable fuel would not be feeding more total mass of hazardous constituents than if it burned fossil fuels.[10]

a. Specification Levels for Halogenated Compounds. I. Summary. For the final rule, EPA is using its composite benchmark approach to establish a total halogen specification and allowing compliance with a total organic halogen limit in lieu of complying with limits on individual Appendix VIII halogenated compounds. Therefore, a comparable fuels generator would have the option of complying: (a) with a total organic halogen specification of 25 ppm plus the total PCB specification or (b) with the all of the individual Appendix VIII specifications for halogen compounds. In addition, in both cases, the generator would also have to comply with the total halogen limit (which includes both organic and inorganic halogens) of 540 ppm and with a total PCB specification (non-detect at a minimum required detection limit of 1.4 ppm). See § 261.38(a)(2), Table 1.

Compliance with a total organic halogen specification in lieu of limits on individual halogenated compounds will ensure that measurable levels of halogenated compounds will be no greater than in benchmark fuels. In addition, the total organic halogen specification will result in less sampling and analysis costs. Finally, the total halogen limit (both organic and inorganic) will create a presumption that halogenated products of incomplete combustion (PICs) generated from burning a comparable fuel will not be emitted at higher levels than from burning a benchmark fossil fuel.

ii. Total Halogen Rationale. Although total halogens are not listed in Appendix VIII, Part 261, EPA proposed a total halogen specification to establish a presumption that halogenated products of incomplete combustion (PICs) generated from burning a comparable fuel would not be emitted at higher levels than from burning a benchmark fossil fuel. See proposal (61 FR at 17461) and subsequent notices of data availability (61 FR 43502, August 23, 1996 and 61 FR 47402, September 9, 1997). PICs resulting from the burning of halogenated organic compounds can pose a particular hazard to human health and the environment.[11] Using the benchmark approach, EPA proposed a composite fuel total halogen limit of 25 ppm.

At the time of the proposal, EPA intended to establish a total halogen limit that included both organic and inorganic halogens. However, the total halogen data used by EPA in the proposed rule for its No. 4 and No. 6 fuel oils were based on analytical methods measuring only total organic halogens, not both organic and inorganic halogens. Commenters raised concerns about including total halogen data that did not include inorganic halogens because it did not represent typical halogen content found in benchmark fuels. EPA was persuaded by commenters' arguments and noticed additional total halogen data gathered from its own database (i.e., Certifications of Compliance (CoC) required by the Boilers and Industrial Furnace Rule) and data submitted by one commenter. In addition, EPA will continue to use its original gasoline and No. 2 fuel oil halogen data, which included both organic and inorganic halogens. Using the additional data, the total halogen specification would be 540 ppm for the composite benchmark data. For further discussion, see NODA 61 FR at 47402.

In response to EPA's NODA, commenters argued that some of the data should not be used to establish the total halogen specification due to the use of inappropriate analytic methods. In particular, commenters believe that CoC data from two facilities (Huntsman Polypropylene Corporation and American Cyanamid) should not be included because the analytical method used measured organic halogens only. In addition, commenters believe that CoC data from another facility (Dow Chemical) should not be included because the detection limit of the method used to analyze for total halogens (ASTM Standard D 808) is not sensitive below 1000 ppm, and unless some other, more sensitive analytical method were followed afterward, the method could not have been effective at the levels reported. EPA is persuaded by these commenters' arguments and has excluded the data from these three facilities from its halogen data set. Using this revised data set, the total halogen specification would be 540 ppm for the composite benchmark data. For the final rule, EPA is promulgating a total halogen specification of 540 ppm.

In response to the initial proposal, some commenters argued that EPA should consider solid fuels like wood and coal in the development of a total halogen specification. As discussed above, EPA has decided not to include solid fuels in its benchmark specification. Thus, EPA is not inclined to consider using solid fuels to set one of the specifications. Also, EPA is concerned about the formation of halogenated PICs from comparable fuels containing halogens. At this time, EPA has no data to support a conclusion that the higher halogen levels in solid fuels would not cause an increase in

[8] Constituent levels presented in today's final rule have been corrected from the fuel's heating value (approximately 20,000 BTU/lb) to 10,000 BTU/lb.

[9] Consult USEPA, "Final Technical Support Document for HWC MACT Standards, Development of Comparable Fuels Specifications", May 1998.

[10] Note that the heating value correction would apply only to allowable constituent levels in fuels, not to detection limits. Detection limits would not be corrected for heating value.

[11] For further discussion see USEPA, "Final Technical Support Document for HWC MACT Standards, Development of Comparable Fuels Specifications", May 1998.

halogenated PIC formation compared to benchmark fuels.

The Agency also received comment on an emissions-based equivalency determination to qualify for the total halogen specification. One commenter argued that the Agency should consider the commenter's candidate comparable fuel as a comparable fuel even though it cannot meet the comparable fuel specification for total halogens. The Agency considered the situation but, as indicated in the September 9, 1997 NODA (62 FR at 47403), continues to maintain that an emissions-based equivalency determination to the halogen specification on a national regulatory basis would be inappropriate and infeasible at this time.

In response to EPA's NODA, the commenter argued that an equivalency determination would not be administratively complex and that it could involve a demonstration by the person applying for the equivalency determination that the chemistry of the fuel is such that it is incapable of forming halogenated PICs. EPA is not persuaded by the commenter's arguments. For hydrocarbon-based fuels, combustion conditions (such as oxygen level, mixing, temperature, etc.) will have an impact on non-chlorinated and/or chlorinated PIC emissions. Additionally, chlorine in both inorganic and organic forms in the waste fuel can contribute to chlorinated PIC emissions. Dioxin/furans and other chlorinated PICs have been detected from sources burning both inorganic (e.g., salts) and/or organic chloride (e.g., plastics) containing wastes.[12] Furthermore, if the Agency were to develop an equivalency determination for total halogens, the implementation details needed in a national regulation to ensure proper combustion of halogenated wastes would be numerous, including, for example, provisions on burner operating parameters, performance testing, and monitoring. These details would almost certainly result in a complicated conditional exclusion from the definition of solid waste that is viewed as both potentially unworkable and very difficult to implement on a national basis.

Therefore, EPA is not inclined at this time to consider developing any national equivalency determination to the total halogen specification. At some future point, perhaps as the Agency's understanding of cause-and-effect relationships regarding emissions from a wider variety of sources grows, EPA may be able to address aspects of the commenter's recommendations if appropriate and feasible.

iii. Total Organic Halogen Rationale. As an additional part of its proposal, EPA invited comment on whether a total halogen specification could act as a surrogate for limits on individual halogenated compounds found in Appendix VIII. In this case, EPA's proposed limit of 25 ppm for total organic halogens would act as the surrogate for the individual halogenated organics. Commenters supported the surrogate approach and indicated that it would reduce the testing and recordkeeping costs on the regulated community. EPA agrees that this approach will simplify the comparable fuels specification and possibly mean fewer and less costly sampling and analyses of comparable fuel streams for generators.

However, some commenters raised concerns that a total halogen analysis will not be an effective screen for some of the more hazardous halogenated Appendix VIII constituents which could constitute a potential risk at low detection levels (e.g., tetrachlorodibenzo-p-dioxins). EPA calculated the equivalent constituent concentrations using the minimum detection limit values for these hazardous halogenated organics and determined that the 25 ppm total organic halogen limit will be an effective screen for all of the chlorinated dibenzofurans and chlorinated dibenzodioxins (i.e., the tetra- through octa-congeners). The minimum detection limits calculated for these congeners ranged from 30 to 150 ppm and the 25 ppm organic halogen specification will limit these congeners' concentrations to below those minimum detection limits. Additional factors in this decision to use the 25 ppm halogen limit as a screen for dioxins include the following:

(1) In particular, waste codes F020, F021, F022, F023, F026 and F028 have been designated as "inherently waste-like" under 40 CFR 261.2(d) and therefore are not eligible for the comparable fuel exclusion;

(2) Wastes listed because they contain dioxins would also be expected to contain significant levels of other halogenated organics. (The reader should note that the compounds in question are typically formed from the breakdown and reaction of other halogenated organics.) The higher concentrations of these other halogenated organics would drive the total organic halogen content of the waste up and, thus, the contribution of any chlorinated dibenzofurans and dioxins would have to be significantly less than the 25 ppm limit; and

(3) Waste codes expected to contain significant levels of other halogenated organics can be readily discerned from their list descriptions in 40 CFR 261 Subpart D (e.g., F001 and F002 solvent wastes are defined as halogenated solvents; F024 includes waste from production of halogenated organics.) In addition, Appendix III to Part 268 lists the halogenated organics typically found in hazardous wastes and that are subject to land disposal restrictions under 40 CFR 268.32. By comparing these, a person implementing today's rule could easily determine the most likely waste codes that could contain halogenated organics in excess of the 25 ppm limit, and thus easily identify wastes not eligible for the comparable fuels exclusion. See also Section E below for point of generation and blending/treatment discussions.

Commenters are also concerned that the use of a total organic halogen surrogate will possibly mask illegal PCB disposal. Since low analytical detection limits for PCBs (i.e., 1.4 ppm) in the benchmark fuel matrices have been well-demonstrated, the 25 ppm total organic halogen limit would not be a sufficient screen. Since PCBs are relatively common halogenated contaminants in fuel-like wastes and the probability of finding them is non-trivial, EPA is keeping the limits on PCBs to ensure levels no greater than from benchmark fuels. EPA also points out that there are several relatively inexpensive analytical screening methods that have been developed specifically for the determination of total PCBs.

With regard to analysis methodology, commenters have indicated that the test method (ASTM Method 4929) used by EPA to analyze for organic halogens may not be appropriate to analyze their candidate comparable fuel. EPA recognizes that the methods used in its own analysis of the benchmark fuels may not be appropriate for some candidate comparable fuels. Thus, in the final rule EPA is allowing the use of alternate methods or modifications to current methods that meet the performance based criteria in section § 261.38(c)(7). It is the responsibility of the generator to ensure that the sampling and analysis is unbiased, precise, and representative of the waste. For further details, see Section G. Sampling and Analysis, below.

b. Specification Levels for Nitrogenated Compounds. Although total nitrogen is not listed on Appendix VIII, Part 261, EPA proposed a total

[12] For further discussion see USEPA, "Final Technical Support Document for HWC MACT Standards, Development of Comparable Fuels Specifications", May 1998.

nitrogen specification to ensure that nitrogenated products of incomplete combustion (PICs) from burning a comparable fuel would not be emitted at higher levels than from burning a benchmark fossil fuel. See proposal (61 FR at 17462) and a subsequent notice of data availability (61 FR 43502, August 23, 1996). PICs resulting from burning nitrogenated organic compounds can also pose a particular hazard to human health and the environment.[13]

Commenters generally did not address the issue of formation of nitrogenated PICs. Instead, most commenters disagreed with the need to establish a specification for nitrogen under RCRA's comparable fuel specification when this pollutant (as NOx) is controlled under the Clean Air Act (CAA). Commenters argued that EPA has the authority under the CAA to control certain criteria pollutants, such as nitrogen oxides and, in fact, has promulgated primary and secondary National Ambient Air Quality Standards (NAAQS) for oxides of nitrogen. EPA believes that a total nitrogen specification is necessary. The counter-arguments advanced do not address EPA's rationale for establishing a total nitrogen limit. The CAA NAAQS do not themselves ensure control of individual combustion units in a manner that prevents formation of nitrogenated PICs, nor do they ensure that a hazardous waste-derived fuel would contain no greater amounts of nitrogenated compounds than fossil fuels. EPA is therefore establishing a total nitrogen specification to ensure that concentrations of nitrogenated PICs in comparable fuels will be no greater than in benchmark fuels.

As an additional part of its proposal, similar to total halogens, EPA invited comment on whether a total nitrogen specification could act as a surrogate for limits on individual nitrogenated compounds found in Appendix VIII. EPA believes that a surrogate approach would simplify the comparable fuels specification and possibly mean fewer and less costly sampling and analyses of comparable fuel streams for generators. However, analysis of EPA's composite data results in a total nitrogen specification of 4,900 ppm. The detection limits for EPA's analysis of individual nitrogenated compounds in its benchmark fuels ranged from 1 to 2200 ppm. Since detection limits for nitrogenated compounds in the benchmark fuels have been demonstrated well below 4,900 ppm, a total nitrogen specification would not be a sufficient screen for individual Appendix VIII nitrogenated compounds.

Therefore, for nitrogen compounds, EPA is promulgating a total nitrogen specification of 4,900 ppm with individual Appendix VIII nitrogen specifications. See § 261.38(a)(2), Table 1. This approach ensures that levels of individual nitrogenated compounds and the total nitrogen concentration are no greater than the benchmark fuels and creates a presumption that concentrations of nitrogenated PICs from burning a comparable fuel are no greater than burning a benchmark fuel.

3. Individual Hazardous Constituent Specifications

To limit the Part 261, Appendix VIII constituents in comparable fuels to those found in benchmark fossil fuels, the Agency calculated concentration limits using the Agency's analysis of individual benchmark fuel samples. Where EPA did not detect a particular Appendix VIII constituent in the benchmark fuel, the Agency set the constituent specification using one of two approaches. For constituents that the Agency did not detect and did not have reason to believe would be present in a benchmark fuel (e.g., halogenated organics), the comparable fuel specification is "non-detect" with an associated, specified minimum required detection limit for each compound. The detection limit is a statistically-derived level based on the quantification limit determined for each sample. While these constituents should not be present, the Agency will allow non-detects lower than the detection limits that EPA was able to obtain. However, EPA will not allow measured or quantified results below the specified minimum required detection limit where "non-detect" is the comparable fuel specification. For metals, hydrocarbons, and oxygenates, the Agency followed a different approach, which is described below.

a. Individual CAA and Appendix VIII Metals. EPA proposed concentration levels or minimum required detection limits for all CAA metals and RCRA Appendix VIII metals (61 FR at 17460). Commenters argued that the Agency should modify its approach with respect to non-detect levels and allow the hazardous constituent to be present in the comparable fuel up to the detection limit. In particular, commenters argued that metals are expected to be present in petroleum products, resulting from the formation process or the production process, and, therefore, it is reasonable to assume that non-detect metals in EPA's benchmark analysis would be present up to the detection limit. EPA agrees that metals could be present in fossil fuels but below EPA's detection limits. Therefore, the final rule allows metals to be present at any concentration less than or equal to the detection limits in EPA's analysis.

In addition, as proposed, EPA is setting limits for two metals that are not found on Part 261, Appendix VIII: cobalt and manganese. EPA included these metals in the analysis because they are listed in the Clean Air Act as hazardous air pollutants (HAPs). See CAA, section 112(b) and proposal (61 FR at 17460). By including these metal HAPs and the RCRA metals listed on Appendix VIII, Part 261, the Agency will ensure that the specification limits all toxic metals of concern in hazardous wastes to levels present in the benchmark fossil fuels. Therefore, EPA is promulgating constituent levels for the all CAA metals and RCRA Appendix VIII metals at the largest value composite of EPA fossil fuel data. See § 261.38(a)(2), Table 1.

b. Individual Appendix VIII Toxic Organics. EPA is promulgating constituent levels or minimum required detection limits for all Part 261, Appendix VIII, toxic organic constituents, unless otherwise noted. See § 261.38(a)(2), Table 1. Some Appendix VIII compounds were not analyzed because a routine analytical method is not available. Because EPA did not analyze for some compounds in Appendix VIII, EPA will not be promulgating standards for these remaining Appendix VIII constituents. These compounds are not listed in today's specifications, and a comparable fuel generator will not have to comply with specifications for these compounds. EPA believes it highly unlikely that a hazardous waste-derived fuel would contain only these undetectable Appendix VIII constituents.

i. Specification Levels for Undetected Pure Hydrocarbons. EPA proposed allowing pure hydrocarbons on Appendix VIII to be present at any concentration less than or equal to the detection limits in EPA's analysis. Since fossil fuels are comprised almost entirely of pure hydrocarbons[14] in varying concentrations, it is possible that many pure hydrocarbons in Appendix VIII, Part 261, could be present in fossil fuel but below detection limits. These materials, which include compounds such as fluoranthene, might not even be considered solid wastes when burned in

[13] For further discussion see USEPA, "Final Technical Support Document for HWC MACT Standards, Development of Comparable Fuels Specifications", May 1998.

[14] Excluding sulfur, carbon and hydrogen comprise 99.6 to 100% of liquid fossil fuels.

their pure carbon form since they are themselves products. See § 261.2(c)(2)(ii), and see proposal (61 FR at 17461).

Some commenters argued that no comparable fuels specifications should be established for pure hydrocarbon compounds because pure hydrocarbons will burn cleanly. EPA disagrees for the purpose of today's rule because establishing no limits for Appendix VIII hydrocarbons would depart from the basic comparable benchmark approach and even relatively clean-burning compounds may produce some toxic emissions. EPA's analysis confirms that these compounds are not present in the benchmark fuels above the minimum detection limits. However, it is reasonable to assume that the "non-detect" pure hydrocarbons could in fact be present in fossil fuels up to the detection limit since fossil fuels are comprised entirely of pure hydrocarbons. Therefore, the final rule allows hydrocarbons in Appendix VIII to be present at any concentration less than or equal to the detection limits in EPA's analysis. See § 261.38(a)(2), Table 1.

Some commenters argued that toluene, a typical fuel component, should be allowed without limitation in comparable fuels. As discussed above for all hydrocarbons, EPA disagrees with not establishing any limits on toluene, or establishing a different specification not based on fuel data, because this would depart from the comparable benchmark approach. EPA has established the toluene specification at the fuel data-based concentration found in its benchmark fuel analysis. However, because toluene can be a fuel component, setting a different data-based specification for toluene may be warranted at some point in the future, and therefore EPA will continue to remain open to considering further action.

ii. Specification Levels for Undetected Oxygenates. In addition to the pure hydrocarbon compounds, EPA invited comment on whether oxygenates should be allowed up to the detection limits in EPA's analysis and on what would be an appropriate minimum oxygen-to-carbon ratio to identify an oxygenate. (61 FR at 17461). Oxygenates are organic compounds comprised solely of hydrogen, carbon, and oxygen and can serve as fuels or fuel additives. Examples of oxygenates (not in Appendix VIII and thus not RCRA regulated) include alcohols such as ethanol, and ethers such as methyl tert-butyl ether (MTBE). Appendix VIII oxygenates are not routinely found in fossil fuels and only a few oxygenates were detected in EPA's sampling and analysis program.

Several commenters supported allowing oxygenates at any concentration less than or equal to the detection limit but also argued that EPA should go a step further and set no specification limits for oxygenated compounds. Commenters argued that oxygenates (like isobutyl alcohol) burn well and promote good combustion of other constituents in a fuel. Again, for the purpose of today's rule, EPA disagrees with not establishing any limits on oxygenates because this would depart from the basic comparable benchmark approach. EPA's analysis confirms that these compounds are not present in the benchmark fuel above the minimum detection limits and establishing a specification without fuel data containing oxygenates would depart from the comparable fuel approach. Furthermore, oxygenates are listed on Appendix VIII for their toxicity and in particular, one group of organic oxygenates, organic peroxides, can be extremely hazardous to manage. However, since most oxygenates burn well and are not likely to produce significant PICs, EPA will allow these compounds at any concentration less than or equal to the detection limits found in EPA's analysis.

EPA notes that the Clean Air Act provides for the use of some oxygenates (like isobutyl alcohol) as additives in unleaded gasoline and it may be appropriate to consider their use in a comparable fuel. However, at the time of this final rulemaking, EPA had no fuel data in which these oxygenates were used as gasoline additives and thus was not able to set a specification different than in today's final rule. As discussed above, any approach without using fuel data would depart from the comparable fuel approach. However, setting data-based specifications for certain oxygenates may be warranted at some point in the future, and therefore EPA will continue to remain open to considering further action.

With regard to a minimum oxygen-to-carbon ratio to define an oxygenate, one commenter recommended defining oxygenates simply as aliphatic compounds comprised of carbon, hydrogen, and oxygen. If EPA was intent on defining an oxygen-to-carbon ratio, other commenters recommended a ratio of 0.266, which is the ratio for MTBE. Defining an oxygenate with a minimum oxygen-to-carbon ratio or limiting the definition to only aliphatics is more conservative than necessary. Instead, EPA is defining an oxygenate as any compound comprised solely of hydrogen, carbon, and oxygen.

In summary, the final rule allows oxygenates, defined as any compound comprised solely of hydrogen, carbon, and oxygen, at any concentration less than or equal to the detection limits in EPA's analysis. See § 261.38(a)(2), Table 1.

D. Parameters for the Synthesis Gas Fuel Exclusion

In today's final rule, EPA is also excluding from the regulatory definition of solid waste (and, therefore regulation as hazardous waste) a particular type of hazardous waste-derived fuel, namely a type of synthesis gas ("syngas") fuel meeting particular specifications. The exclusion applies to syngas that results from the thermal reaction of hazardous wastes by a process designed to generate both hydrogen gas (H_2) and carbon monoxide (CO) as usable fuel. See proposal (61 FR at 17465).

Some commenters stated that synthesis gas fuels are beyond EPA's regulatory authority because they are uncontained gases. EPA has broad statutory authority to regulate fuels produced from hazardous wastes. RCRA section 3004 (q) (1); see also *Horsehead Resource Development Co.* v. *Browner*, 16 F. 3d 1246, 1262 (D.C. Cir. 1994) (broadly construing this authority). The fact that syngas (by definition) is a gas, rather than a solid or liquid, does not appear to raise jurisdictional issues. It is still produced from the hazardous wastes that are being processed thermally. See § 261. 2 (c) (2) (A) and (B) (defining such materials as solid wastes). EPA believes its authority to be clear under these provisions.

EPA also received a number of comments from persons operating synthetic gasification processes within the petroleum industry. These comments also argued that the Agency was without legal authority to regulate the fuel output of these processes even if the processes use hazardous waste as a feed material. The Agency has in fact adjudicated the status under existing regulations of such a unit, indicating that while both the process and the fuel output are within RCRA subtitle C jurisdiction, the process is a type of exempt recycling unit under 40 CFR 261.6(c)(1) and the fuel is also exempt under § 261.6(a)(3). Letter of Michael Shapiro (Director of Office of Solid Waste) to William Spratlin (Director RCRA Division EPA Region VII) (May 25, 1995).

Upon reflection, it appears that these petroleum gasification operations may be similar to other within-petroleum industry recycling activities that EPA has proposed to exclude from Subtitle C jurisdiction in the petroleum listing rule

proposed on November 20, 1995. 60 *FR* 57747. It therefore appears more appropriate to consider this overall jurisdictional issue in the context of that rulemaking. However, EPA is not at this time limiting the synthetic gas fuel exclusion insofar as it potentially applies to the output of gasification operations conducted as part of normal petroleum refining (SIC Code 2911). Thus, these syngas fuels can also be eligible for the exclusion in today's rule.

To ensure that any excluded hazardous waste-derived syngas contains low levels of hazardous compounds relative to levels in fossil fuels, the Agency is setting a series of syngas specifications addressing:

(1) physical specifications:

—Minimum Btu value (Btu/scf);

(2) general constituent specifications for:

—Total halogen (ppmv)

—Total nitrogen (ppmv)

—Hydrogen Sulfide (ppmv)

(3) individual hazardous constituent specifications, for:

—Individual Appendix VIII constituents (ppmv)

1. Physical Specifications

a. Minimum Btu value. Like the comparable fuel specification, EPA proposed that syngas fuel have a minimum Btu value of 5,000 Btu/lb. Commenters had several concerns with this specification. First, commenters noted that the heating value of a gas is almost universally measured in units of Btu per unit volume ("scf"). Second, commenters argued that due to the efficiencies of combustion, a gas can be used as a fuel even though its heating value, when expressed in terms of Btu per pound, is less than 5000. Commenters argued that using fuels with significantly higher Btu per scf could actually degrade efficiency of gas turbine electric generation systems and increase air emissions. For example, syngas with a heating value of 5000 Btu per pound would have to be diluted to reduce its heating value to enable a combustion turbine to meet NO_X emission limits. Furthermore, commenters argued that in many potential applications, syngas produced from hazardous waste would be used as a substitute for syngas produced from fossil fuels or syngas produced from non-hazardous secondary materials. Syngas produced from coal, coke, and certain types of secondary materials, with heating values less than 5000 Btu per pound (when expressed in these terms), are currently used as fuels.

EPA agrees with commenters' concerns with regard to the heating value of syngas. To set an appropriate heating value, EPA investigated the heating values of syngas currently manufactured for use as a fuel.[15] For fuel usage related purposes, syngas is classified as either medium- or low-Btu gases (medium-Btu generally being produced with pure oxygen, low-Btu generally with air). Medium-Btu syngas generated from the gasification of fuels (including coal, fuel oil, biomass, municipal solid wastes, plastics, etc.) with pure oxygen typically has heating values from 200 to 400 Btu/scf. Medium-Btu syngas can typically be used as a fuel for power production in a gas turbine. Low-Btu syngas generated from the gasification of fuels with air has heating values from about 100 to 200 Btu/scf. In most cases, low-Btu syngas does not achieve temperature and expansion ratios needed for thermodynamically efficient power generation. Low-Btu syngas is usually mixed with higher energy sources and is not generally desired for most applications. However, EPA notes that there are certain specifically designed gas turbines (with very large "silo" combustion chambers) that can handle very low-Btu (100 Btu/scf) syngases for power generation. Thus, a heating value of 100 Btu/scf is reasonable for syngas because it represents fuels used as legitimate energy sources. Therefore, EPA is establishing a minimum Btu value of 100 Btu/scf for synthesis gas. See § 261.38(b)(1).

2. General Constituent Specifications

a. Total Halogen Specification. As proposed, EPA is promulgating a total halogen specification for synthesis gas fuels of less than 1 ppmv. Like comparable fuels, EPA is establishing a total halogen specification to limit the formation of halogenated PICs from the burning of the hazardous waste-derived syngas fuel. EPA has looked at syngas manufactured from non-hazardous waste sources, such as coal, and concludes that 1 ppmv is a reasonable specification for total halogen for a synthesis gas fuel. See § 261.38(b)(2).

b. Total Nitrogen Specification. EPA proposed a total nitrogen specification of less than 1 ppmv of total nitrogen, other than diatomic nitrogen (N_2). Like comparable fuels, EPA was concerned about the formation of nitrogenated PICs from the nitrogen contained in the hazardous waste-derived syngas fuel. Commenters argued that regardless of whether nitrogen is present in the syngas, when syngas is burned, NO, NO_2 and NO_X will always form, as nitrogen present in the air combines with oxygen in the syngas, the air or both. In addition, commenters argued that the Agency or authorized states already regulate the emissions of these air pollutants through the issuance of air permits. Furthermore, commenters argued that nitrogen in the syngas would not lead to the formation of PICs.

EPA disagrees with the commenters that a total nitrogen specification is unnecessary and believes that the comments did not address EPA's rationale for a total nitrogen limit. EPA is establishing a total nitrogen specification to limit the formation of nitrogenated PICs. Diatomic nitrogen is not included in a total nitrogen specification because only organic-bound nitrogen compounds are expected to form PICs. However, a total nitrogen specification based on syngas used as a fuel is a more appropriate specification. EPA has looked at syngas currently manufactured for use as a fuel to establish a total nitrogen specification. Nitrogen compounds in syngas (other than N_2) are mostly in the form of HCN or NH_3. Syngas manufactured from coal can have HCN and NH_3 levels of 100 to 300 ppmv.[16] A total nitrogen specification of 300 ppmv would ensure that concentrations of nitrogenated PICs in waste-derived syngas will be no greater than syngas manufactured from coal. Therefore, in today's final rule, EPA is promulgating a total nitrogen specification of 300 ppmv, other than diatomic nitrogen (N_2) for synthesis gas fuel. See § 261.38(b)(3).

c. Hydrogen Sulfide Specification. EPA proposed a hydrogen sulfide (H_2S) specification of 10 ppmv for syngas fuels. Commenters argued that the H_2S specification is not necessary because the Clean Air Act has specifications that restrict the amount of sulfur that can be emitted by sources that would likely burn syngas fuel (i.e., boilers, combustion turbines). In addition, commenters argued that the potential of facilities that burn syngas as a fuel to emit sulfur compounds is low in comparison to facilities burning fossil fuels. For example, facilities that produce power by burning syngas produced from the gasification of coal emit approximately one-fifth of the level of sulfur compounds emitted by similar facilities burning coal.

EPA disagrees with the commenters that no hydrogen sulfide specification

[15] For further discussion see USEPA, "Final Technical Support Document for HWC MACT Standards, Development of Comparable Fuels Specifications", May 1998.

[16] For further discussion see USEPA, "Final Technical Support Document for HWC MACT Rule, Development of Comparable Fuels Specifications", May 1998.

should be promulgated. EPA is establishing the syngas exclusion by limiting Part 261 Appendix VIII constituents, one of which is hydrogen sulfide. However, a more appropriate specification would be based on current applications where syngas is used as a fuel, rather than the proposed specification of 10 ppmv. To set an appropriate hydrogen sulfide specification, EPA investigated the hydrogen sulfide levels in syngases currently manufactured from non-hazardous waste sources for use as a fuel.

The sulfur content of the material used to produce the syngas is converted to almost entirely H_2S in the gasification process, with smaller amounts of carbonyl sulfide (COS). Syngas produced from low sulfur content material does not contain appreciable H_2S. The H_2S content of high sulfur coal-based syngas can be over 1000 ppmv. However, in these cases, H_2S is removed during the gasification process. The amount of H_2S removal is dependent on how the syngas will be used. In the case of syngas used for chemical feedstock, the H_2S removal can be to a level under 1 ppmv. For the case of syngas used for fuel, H_2S removal can range to levels between 50 and 200 ppmv (above 200 ppmv leads to corrosion of down stream gas handling equipment, such as turbine blades.[17] Thus, 200 ppmv represents the level of H_2S in gas currently used in applications where syngas is used as a fuel. Therefore, in this final rule, EPA is promulgating a H_2S specification of 200 ppmv for synthesis gas fuels. See § 261.38(b)(4). EPA further notes that H_2S removal is considered as part of the gasification process and a syngas generator is required to meet the H_2S specification after this removal process.

3. Individual Hazardous Constituent Specifications

As proposed, EPA is promulgating specifications of less than 1 ppmv for each hazardous constituent listed in Appendix VIII of part 261 (that could reasonably be expected to be in the gas). Having received no comments to the contrary, this a reasonable specification for Appendix VIII constituents in a synthesis gas fuel. See § 261.38(b)(5). Since EPA is promulgating a total halogen specification for syngas and since this specification ensures that the excluded syngas has less than 1 ppmv of individual halogenated compounds, a syngas generator would not be expected to analyze for the individual halogenated compounds in Appendix VIII. However, a syngas generator would be expected to analyze for the individual nitrogenated compounds in Appendix VIII since a total nitrogen specification of 300 ppmv would not ensure that individual nitrogenated compounds would be limited to 1 ppmv. In addition, a syngas generator would be expected to analyze for the Appendix VIII constituents identified in the comparable fuels specification. See § 261.38(a)(2) Table 1.

E. Meeting the Comparable Fuel Specifications

1. Potential Applicability of Today's Rule to Specific Waste Codes

The probability of today's rule being applicable to any specific hazardous waste is highly dependent upon the waste codes assigned to that waste as well as the industry generating the waste. In developing the Land Disposal Restrictions (40 CFR part 268) and in developing the listings of hazardous wastes (40 CFR part 261), the majority of the listed hazardous wastes were analyzed for concentrations of specific hazardous constituents. EPA has already determined that the majority of listed hazardous wastes (i.e., those having codes beginning with "F", "K", "U" or "P") are known to contain at least one of the hazardous constituents that are restricted by today's rule to "non-detect" levels. Appendix VII to Part 261 provides a partial list of hazardous constituents that are known to be present in each Listed Waste code, and the Treatment Standards for Hazardous Wastes (40 CFR 268.40) indicate constituents (and concentrations) that are specifically regulated for land disposal for each waste code. The majority of these constituents and waste codes are restricted to "non-detect" levels in today's rule and so a potential comparable fuel containing these constituents either could not be used, or would have to be treated so that the hazardous constituents are removed or destroyed to non-detect levels. See treatment discussion below, Section E.4. It is possible, however, that an organic solvent or oil could carry one of these codes, based on the derived-from rule only, and could comply with the limits in today's rule. As such, EPA did not restrict the application of today's rule to any waste code, except in the case of wastes listed for the presence of dioxins or furans. See 261.38(c)(12). However, EPA does not expect that corrosive or reactive wastes would be candidate comparable fuels because of the detrimental impacts on the burning unit that would occur.

At the same time, there are specific listed waste codes that EPA expects to contain only those constituents for which today's rule sets maximum allowable concentrations. As such, some wastes with these codes would be likely candidates for compliance with the corresponding constituent limits. These applicable wastes are primarily expected to be: ignitable solvent wastes (F003 and F005), wastes from petroleum production (F037, F038, and K048–51), and wastes from coking operations (K060, K087, K141–145, K147 and K148). Table 1 also lists a set of U waste codes and their corresponding constituents that may be applicable depending upon their concentrations.

It is expected that today's rule will primarily be applied to wastes that are classified as hazardous only because they exhibit the hazardous characteristic of ignitability (D001) and/or corrosivity (D002). In comparing the regulatory levels for characteristic metal wastes (D004–D011) and the corresponding allowable limits for these metals in today's rule, there is an extremely small window of applicability for some wastes identified as D006 (cadmium) or D009 (mercury) and likewise a relatively small window of applicability for some D008 wastes (lead). All other characteristic metal wastes fail the limit restrictions for metals. D003 wastes that are classified as hazardous due to their cyanide (CN) content are expected, for the most part, to fail to meet the specification for total nitrogen. Except for D018 wastes (benzene), wastes that are characteristic for organics (D012–D043) are also expected to be unable to comply with either the limits or the "non-detect" requirements.

All wastes consisting primarily of alcohols (e.g., ethanol or isopropanol), petroleum distillates, oils, or other ignitable organic liquids) are the most likely candidates for applying today's rule. This is quite logical in that these chemicals tend to have good fuel value when compared to the fuels examined for today's rule. The most probable listed wastes that are expected to be able to comply with today's rule are F003 and F005 solvents (except those F005 wastes containing carbon disulfide, pyridine, or nitrobenzene). There are an additional number of "U" wastes identified in Table 2 that are also good candidates for compliance with today's rule. These chemicals are either hydrocarbons or oxygenated hydrocarbons for which today's rule does not establish any limits.

Because of the potential for cross-contamination, wastes from facilities

[17] For further discussion see USEPA, "Final Technical Support Document for HWC MACT Rule, Development of Comparable Fuels Specifications", May 1998.

(e.g., pesticide manufacturers and halogenated solvent manufacturers) known to manufacture concentrated forms of the chemicals restricted by today's rule, are the most likely to require closer scrutiny and testing. However, wastes generated by these facilities that are not expected to be cross-contaminated would include non-contact solvents, hydraulic or lubricating oils, and solvent-based wastes from the production of unregulated constituents.

TABLE 1.—LISTED "U" WASTES WITH CORRESPONDING CONSTITUENT LIMITS

Constituent for which the code was listed	Waste code
Acetophenone	U004
Benz[a]anthacene	U018
Benzene	U019
Benzo(a)pyrene	U022
Bis(2-ethylhexyl) phthalate	U028
Chrysene	U050
Creosote	U051
Cresol cresylic acid (total cresols)	U052
Dibenz[a,h]anthracene	U063
Di-n-butyl phthalate	U069
Diethyl phthalate	U088
7,12-Dimethylbenz[a]anthracene	U094
Di-n-octyl phthalate	U107
Fluoranthene	U120
Indeno(1,2,3-cd) pyrene	U137
3-Methylcholanthrene	U157
Naphthalene	U165
Toluene	U220
Acrolein	P003
Allyl alcohol	P005
Endothall	P088
Propargyl alcohol	P102
Ethyl methacrylate	U118
Isobutyl alcohol	U140
Isosafrole	U141
Methyl ethyl ketone [2-Butanone] [MEK].	U159
Methyl methacrylate	U162
1,4-Naphthoquinone	U166
Phenol	U188
Safrole	U203
2-Ethoxyethanol [Ethylene glycol monoethyl ether].	U359

TABLE 2.—LISTED "U" WASTES WITH NO CORRESPONDING CONSTITUENT LIMITS

Constituent for which the waste was listed	Waste code
Acetaldehyde [Ethanal]	U001
Acetone [2-Propanone]	U002
2-Acetylaminofluorene [2-AAF]	U005
Acrylic acid	U008
Benz[c]acridine	U016
n-Butyl alcohol [n-Butanol]	U031
Carbon oxyfluoride	U033
Crotonaldehyde	U053
Cumene [Isopropyl benzene]	U055
Cyclohexane	U056
Cyclohexanone	U057

TABLE 2.—LISTED "U" WASTES WITH NO CORRESPONDING CONSTITUENT LIMITS—Continued

Constituent for which the waste was listed	Waste code
Dibenzo[a,i]pyrene	U064
1,2:3,4-Diepoxybutane [2,2'-Bioxirane]	U085
α,α-Dimethyl benzyl hydroperoxide	U096
2,4-Dimethylphenol	U101
Dimethyl phthalate	U102
1,4-Dioxane [1,4-Diethyleneoxide]	U108
Ethyl acetate	U112
Ethyl acrylate	U113
Ethylene oxide	U115
Ethyl ether	U117
Formaldehyde	U122
Formic Acid	U123
Furan	U124
Furfural	U125
Glycidylaldehyde	U126
Maleic anhydride	U147
Methanol	U154
Methyl ethyl ketone peroxide	U160
Methyl isobutyl ketone [4-Methyl-2-pentanone].	U161
Paraldehyde	U182
1,3-Pentadiene	U186
Phthalic anhydride	U190
Quinone [p-Benzoquinone]	U197
Resorcinol	U201
Tetrahydrofuran	U213
Xylenes, mixed isomers [Xyenes, total].	U239

2. General

The proposal provided several methods by which a hazardous waste could qualify as a comparable fuel. The final rule retains these methods and adds clarifying conditions to ensure that the methods do not violate existing policy with regard to blending and treatment. The person claiming that a hazardous waste meets the exclusion criteria of this rule will be referred to as the "comparable fuel generator," in the case of excluded liquid fuel, or "syngas fuel generator," in the case of excluded syngas fuel. In today's final rule, a hazardous waste can meet the comparable fuel hazardous constituent, heating value and viscosity specifications of § 261.38(a) in several ways. However, in each case, the generator claiming the exclusion is responsible for demonstrating eligibility. In addition, just meeting the hazardous constituent, heating value and viscosity specifications would not qualify a hazardous waste for the exclusion. The implementation requirements of § 261.38(c) (e.g., notification, certification, sampling and analysis, recordkeeping) must also be satisfied for a hazardous waste to be excluded as a comparable fuel.

A waste can meet the § 261.38(a)(2) hazardous constituent specification if the hazardous waste "as generated," i.e. without any processing, blending or other alteration: (a) Meets the hazardous constituent specification; or (b) does not meet the hazardous constituent specification, but undergoes treatment, pursuant to § 261.38(c)(4), so that the hazardous constituents of concern are destroyed or removed to concentrations that meet the exclusion specification.

A waste can meet the § 261.38(1)(i) heating value specification if the hazardous waste as generated without processing: (a) Meets the heating value specification; or (b) does not meet the hazardous constituent specification, but undergoes treatment, pursuant to § 261.38(c)(4), that destroys or removes material to increase the heating value to meet the exclusion specification.

A waste can meet the § 261.38(a)(1)(ii) viscosity specification if the hazardous waste as generated without processing: (a) Meets the viscosity specification; (b) does not meet the viscosity specification, but through blending, pursuant to § 261.38(c)(3) with fossil fuel, another excluded comparable fuel, or other non-waste changes the viscosity to meet the exclusion specification; or (c) does not meet the viscosity specification, but undergoes treatment, pursuant to § 261.38(c)(4) that destroys or removes material to decrease the viscosity to meet the exclusion specification.

3. Blending

Commenters supported allowing the blending of a hazardous waste that meets the constituent and heating value specifications for the purpose of decreasing viscosity. However, commenters were concerned that blending could dilute toxic constituents and said that blending should only be allowed if toxic constituents in the hazardous waste would not be diluted. In today's final rule, the Agency allows an as-generated hazardous waste, which meets the hazardous constituent and heating value specifications, but does not meet the viscosity specification, to be blended to meet the viscosity specification (see § 261.38(a)). The generator must document that the hazardous waste, as generated without processing, meets the hazardous constituent and heating value specifications prior to any blending. It is also the responsibility of the generator to document that the blending does not violate the dilution prohibition of § 261.38(c)(6). This provision states that the hazardous constituent and heating

value specifications cannot be met through dilution; i.e. they can only be met through treatment which destroys or removes hazardous constituents, or by the waste as-generated. See generally 61 FR at 15586–87 (April 8, 1996) (extending dilution prohibition in § 268.3 to include combustion of inorganic wastes). Allowing blending to meet the hazardous constituent or heating value specification simply increases the amounts of hazardous constituents emitted when the fuels are burned, and would increase these amounts above those emitted if fossil fuels were burned instead. This is at inconsistent with the whole premise of comparable fuels, and also is inconsistent with the section 3004(m) hazardous waste treatment provisions (which, although not directly applicable, articulate important overall statutory objectives) which require hazardous constituents to be removed or destroyed by treatment, not diluted. *Chemical Waste Management* v. *EPA*, 976 F. 2d 2, 16 (D.C. Cir. 1992). As noted earlier, such burning can be viewed as part of the waste management problem, and EPA may validly condition the exclusion to prevent that result.

Blending of a hazardous waste pursuant to § 261.38(c)(3) to meets the viscosity specification obviously may be performed only in regulated units: at a permitted RCRA treatment, storage facility; a regulated interim status treatment, storage facility; or at a 90-day generator unit meeting the requirements of § 262.34.

4. Treatment

Commenters also supported the proposal to allow a hazardous waste to be treated to meet the comparable fuel specifications. Many of the same commenters also expressed concerns that any treatment allowed should reduce emissions of hazardous constituents, i.e. treatment must destroy or remove the constituents or materials of concern. The Agency agrees, and § 261.38(c)(4) specifically states that only treatment which destroys or removes hazardous constituents or materials is permissible. Moreover, as noted above, the waste remains subject to subtitle C control during treatment and thus treatment can only occur in regulated units. (Treatment by blending to meet the viscosity specification likewise can only occur in regulated units, for the same reason.)

It is the responsibility of the generator claiming the exclusion to demonstrate eligibility. See generally § 261.2(f). It should be noted that just meeting the hazardous constituent, heating value and viscosity specifications would not qualify a hazardous waste for the exclusion; the implementation requirements of § 261.38(c) (e.g., notices, certification, sampling and analysis, recordkeeping, etc.) also must be satisfied for a hazardous waste to be excluded as a comparable fuel. The person that treats the hazardous waste to generate a comparable fuel must also demonstrate that the treatment of the hazardous waste destroys or removes the hazardous constituents or materials of concern from the waste. The treater must: (1) Document that the unit that will treat the hazardous waste has been demonstrated to effectively remove or destroy the hazardous constituents (at the levels present in the waste) or materials of concern from the type of waste being treated; or (2) treat the waste in a unit that removes or destroys the constituents of concern, then reanalyze the waste, in accordance with the requirements of § 261.38(c)(8), to document that the constituent specifications have been satisfied.

If a hazardous waste is treated to produce a comparable fuel, only the waste-derived fuel would be excluded from RCRA subtitle C regulation upon a determination that it met the specification. The hazardous waste would be regulated under Subtitle C from the point of generation until the generation of a comparable fuel that meets the exclusion specifications and implementation requirements. This means that the generation, transport, storage, and treatment of the hazardous waste, until exclusion as a comparable fuel, remains subject to applicable Subtitle C regulations.

In addition, residuals from the treatment of a hazardous waste remain solid waste and, if hazardous, are subject to applicable Subtitle C regulations. Thus, if comparable fuel is produced from treatment of listed hazardous waste, the wastes from that process are automatically hazardous by virtue of the derived from rule. (See the derived-from rule in § 261.2(d).)

F. Meeting the Syngas Specifications

Commenters felt the proposal was not very specific in describing ways in which a syngas fuel could be generated from hazardous waste. The final rule makes clear that a hazardous waste can meet the syngas fuel constituent and heating value specifications through the treatment of the hazardous waste. As with comparable fuels, it is the responsibility of the generator claiming the exclusion to demonstrate eligibility. The treatment of a hazardous waste to generate a syngas fuel can occur in either: (1) A unit subject to applicable Subtitle C treatment, storage and disposal requirements (i.e., Parts § 264, § 265 or § 262.34); or (2) a recycling unit exempt under § 261.6(c).

The generator of the syngas fuel must demonstrate that the treatment of the hazardous waste destroys or removes the hazardous constituent of concern from the waste. A generator of syngas fuel from the treatment of hazardous waste must: (1) Document that the unit that will process the hazardous waste has been demonstrated to effectively remove or destroy the hazardous constituents of concern from the type of waste being treated; and (2) process the hazardous waste in a unit that removes or destroys the constituents of concern, then analyze the waste in accordance with the requirements of § 261.38(c)(8) to document that the exclusion specifications have been satisfied. If a hazardous waste is processed to produce a syngas fuel that meets the exclusion specifications, only the syngas fuel would be excluded from RCRA subtitle C regulation.

In addition, residuals from the treatment of a hazardous waste to generate an excluded syngas fuel remain solid waste and are subject to applicable Subtitle C regulations if they are also hazardous wastes. Residuals from the treatment of a listed hazardous waste to generate a syngas fuel remain hazardous wastes due to the derived-from rule: the residuals are derived from treatment of listed hazardous wastes.

G. Sampling and Analysis

Commenters expressed concern that the Agency proposed: (1) To initially require sampling and analysis for all Appendix VIII constituents; (2) to require the use of SW–846 methods to conduct sampling and analysis of Appendix VIII constituents; and (3) to also require the use of the same methods for syngas as for comparable fuels. In response to commenters concerns, the Agency is finalizing the following approaches to sampling and analysis of comparable fuel and syngas fuel.

1. Use of Process Knowledge

A majority of commenters believed that EPA should allow the use of process knowledge under limited circumstances in determining which constituents to test for in the initial scan as well as any follow up testing. The Agency agrees with commenters. Generators of hazardous wastes should have adequate knowledge of their waste to allow the use of process knowledge in determining which constituents may and may not be present in their waste.

The use of process knowledge may only be used by the original generator of

the hazardous waste. If the generator of the hazardous waste and generator of the comparable/syngas fuel are different, then the generator of the comparable/syngas fuel may not use process knowledge to determine that constituents are not present in the waste. The generator of the comparable/syngas fuel, if not the original generator of the hazardous waste, must test for all of the constituents and properties in § 261.38(a)(2) Table 1 of the regulations. This is because the Agency believes that only the original generator may have intimate knowledge of the constituents in the waste to make such a determination. See § 268.7, where EPA uses the same approach for analyzing compliance with LDR treatment standards; *see also Hazardous Waste Treatment Council* v. *EPA*, 886 F. 2d 355, 368–71 (D.C. Cir. 1989) (upholding this approach).

Therefore, the final rule allows the use of process knowledge under certain circumstances. Today's rule requires testing for all constituents except those the initial generator of the hazardous waste determines should not be present in the waste. The following cannot be determined to "not be present" in the waste: (1) A hazardous constituent that causes the waste to exhibit the toxicity characteristic for the waste or hazardous constituents that were the basis for the listing of the waste; (2) a hazardous constituent detected in previous analysis of the waste; (3) a hazardous constituent introduced into the process that generates the waste; or (4) a hazardous constituent that is a byproduct or side reaction to the process that generates the waste.

It is the responsibility of the original generator/comparable fuel generator to document their claim that specific hazardous constituents meet the exclusion specifications based on process knowledge. Regardless of which method a generator uses, testing or process knowledge, the generator is responsible for ensuring that the waste meets all constituent specifications at all times. If at any time the comparable fuel fails to meet any of the specifications, that fuel is in violation of Subtitle C requirements.

2. Waste Analysis Plan

As in the proposal, the final rule requires comparable fuel generators to develop a waste analysis plan prior to sampling and analysis of their hazardous waste to determine if the waste meets the exclusion specifications. This is consistent with the usual requirement throughout the Subtitle C rules that persons generating and treating hazardous waste must prepare a waste analysis plan. See, e.g. § 264.13 (general waste analysis plans) and § 268.7(a)(4) (requiring even generators using 90-day units for treatment to prepare waste analysis plans with respect to hazardous waste prohibited from land disposal). To ensure that the chemical/physical measurements of the waste are sufficient, accurate and precise, the Agency is requiring comparable fuel generators to develop a waste analysis plan, and suggest doing so in accordance with Agency guidance. Chapter Nine of "Test Methods for Evaluating Solid Waste, Physical/Chemical Methods" (SW–846) addresses the development and implementation of a scientifically credible sampling plan. Chapter One of SW–846 describes the basic elements to be included in a Quality Assurance Project Plan (QAPP), as well as information describing basic quality assurance (QA) and quality control (QC) procedures. Chapter Two of SW–846 aids the analyst in choosing the appropriate methods for samples, based upon sample matrix and the analytes to be determined.

Comparable fuel generators may want to follow the SW–846 guidance in developing their waste analysis plans. As specified in the recordkeeping section of the rule (§ 261.38(c)(10)) the generator also must have documentation of the: (1) Sampling, analysis, and statistical analysis protocols that were employed; (2) sensitivity and bias of the measurement process; (3) precision of the analytical results for each batch of waste tested; and (4) results of the statistical analysis.

3. Methods To Analyze Comparable Fuels

In the proposal, EPA required the use of SW–846 methods for the sampling and analysis of wastes to determine if the waste meets the comparable fuel exclusion constituent specifications. Based on commenter response and the Agency's overall increased use of alternative methods to those specified in SW–846, the final rule allows the use of alternate methods that meet the performance based criteria in section § 261.38(c)(8).

The approach allows comparable/syngas fuel generators to use any reliable analytical method to demonstrate that no constituent of concern is present at concentrations above the specification levels. It is the responsibility of the generator to ensure that the sampling and analysis is unbiased, precise, and representative of the waste. For the waste to be eligible for exclusion, a generator must demonstrate that: (1) Each constituent of concern is not present above the specified specification level at the 95% upper confidence limit around the mean; and (2) the analysis could have detected the presence of the constituent at or below the specified specification level at the 95% upper confidence limit around the mean. (See Guidance for Data Quality Assessment—Practical Methods for Data Analysis, EPA QA/G–9, January 1998, EPA/600/R–96/084).

The Agency will consider that the exclusion level was achieved in the waste matrix if an analysis in which the constituent is spiked at the exclusion level indicates that the analyte is present at that level within analytical method performance limits (e.g., bias and precision). In order to determine the performance limits for a method, EPA recommends following the quality control (QC) guidance provided in Chapters One and Two of SW–846, and the additional QC guidance provided in the individual methods.

The Office of Solid Waste's (OSW) standing policy on the Appropriate Selection and Performance of Analytical Methods for Waste Matrices Considered to be "Difficult-to-Analyze" was stated in a January 31, 1996 memorandum from Barnes Johnson, Director of the Economics, Methods, and Risk Assessment Division, to James Berlow, Director of the Hazardous Waste Minimization and Management Division. The following excerpts are appropriate to this rulemaking.

Inadequate recovery of target analytes from the RCRA-regulated waste matrices of concern demonstrates that the analytical conditions selected are inappropriate for the intended application. Proper selection of an appropriate analytical method and analytical conditions (as allowed by the scope of that method) are demonstrated by adequate recovery of spiked analytes (or surrogate analytes) and reproducible results. Quality control data obtained must also reflect consistency with the data quality objectives and intent of the analysis.

(a) For extractable organics in standard RCRA matrices, e.g., groundwater, aqueous leachates, soils, OSW considers a sample preparation method appropriate for use if it generates an analyte recovery of 70% or greater (Method 8270C, Sec. 1.1). For extractable organics in "difficult matrices", e.g., sludges, ash, stabilized wastes, OSW considers a sample preparation method appropriate for use if it generates an analyte recovery of 50% or greater.

(b) For volatile organics, using relative recoveries, i.e., standard curves established by purge-and-trap, or other

techniques for the preparation of standards, OSW considers a sample preparation method appropriate if it generates a relative analyte recovery of 80% or greater (Methods 8260B, 8015B).

(c) For inorganic analytes in almost all matrices, an absolute recovery and precision of 80–120% can generally be achieved with the proper choice of acid digestion procedure and determinative method for the analyte of interest."

4. Syngas Waste Analysis Plan and Analysis Methods

a. General. EPA is concerned that tested and generally accepted methods may not exist for the sampling and analysis of gases from pressurized systems that will ensure an accurate, unbiased, and precise representation of the hazardous constituents present in the gas.

Hazardous constituents present in a gas at high pressure and high temperature may be difficult to analyze accurately due to possible physical and chemical changes in the constituents when a sample is drawn into a low pressure and temperature environment for analysis. For example, some constituents, while present as a gas under high pressure and temperature, may solubilize into liquids that have condensed or adhere to the sampling components as the pressure and temperature drops in the sampling device. If this were to occur, the analysis of the sampled gas would not accurately represent the concentrations of the constituents in the original gas.

The Agency also shares the general concern stated in comments that enforcement of the exclusion specifications could be compromised because of the difficulty in applying or potential absence of accepted sampling and analysis methods for these gases. Therefore, the final rule requires syngas generators to submit for approval, prior to sampling and analysis, a waste analysis plan to the appropriate regulatory authority (see § 261.38(c)(7)(iii)). At a minimum, the plan must specify: (1) The parameters for which each hazardous waste will be analyzed and the rationale for the selection of those parameters; (2) the test methods which will be used to test for these parameters; (3) the sampling method which will be used to obtain a representative sample of the waste to be analyzed; and (4) the frequency with which the initial analysis of the waste will be reviewed or repeated to ensure that the analysis is accurate and up to date; and (5) if process knowledge is used in the waste determination, any information prepared by the facility owner or operator in making such determination.

b. Analysis. A syngas fuel generator also may use the performance-based approach (§ 261.38(c)(8)) to demonstrate that the performance of the methods selected is appropriate to meet the exclusion specifications (as described in 3 above). Guidance on demonstration of appropriate method performance can be found in Chapter One of SW–846 and the Quality Control sections of the individual methods.

5. Non-Detects

EPA proposed that for a waste to meet a non-detect standard, the analysis must achieve a detection limit equal to or less than the EPA specified number and also not detect the constituent of concern in the waste (61 FR 17358). However, some commenters believe that the Agency should develop numerical levels for each parameter in the benchmark where results are "non-detect." They are concerned that a potential comparable fuel that has any measurable levels of Appendix VIII constituents below the Agency's detection limits would not qualify as a comparable fuel.

The final rule maintains the proposed approach for non-detect constituent specifications, except in the case of metals, hydrocarbons and oxygenates (see Section C, above). The Agency believes that allowing concentrations of constituents not found in the benchmark fuels to be present in the comparable fuel is counter to the comparable approach and could allow higher emissions of toxic compounds from burning excluded waste than from benchmark fuels. Additionally, commenters noted that the detection limit, referenced as the "maximum" detection limit, should more accurately be referred to as the "minimum" detection limit that must be achieved. The Agency agrees and the final rule requires that analysis for a constituent with a specification of non-detect must: (1) Meet a detection limit at or less than the minimum required detection limit listed for the constituent; and (2) not detect the constituent of concern in the waste (see § 261.38(a) and (b)).

Commenters also indicated that it may be difficult to achieve the detection limits specified for the non-detect specifications. The Agency continues to believe that the detection limits can be met. This is due in part to the fact that the detection limits are primarily based on the limits found for the No. 6 fuel oil analysis. EPA believes that the matrix for No. 6 fuel oil is a more difficult matrix to analyze than what the Agency believes will be the matrix for the majority of comparable fuels—a light solvent matrix. In addition, to assist generators who may have difficult matrices to analyze, the final rule provides the latitude to use any method that will ensure an unbiased and precise analysis of the waste.

H. Notification, Certification, and Documentation

1. Who Must Make the Exclusion Notification

The person claiming that a hazardous waste meets the exclusion criteria of this rule is known as the "comparable fuel generator" in the case of excluded liquid fuel or "syngas fuel generator" in the case of excluded syngas fuel. The comparable/syngas fuel generator need not be the person who originally generates the hazardous waste. The comparable/syngas fuel generator can be the first person who documents and certifies that a specific hazardous waste meets the exclusion criteria.

2. Notification Requirements

Most commenters agreed with the proposal that a one-time notification was appropriate; however, some commenters said that the exclusion should not be self-implementing and should require some type of review and approval by the implementing authority. The Agency continues to believe that a one-time notification in combination with the other requirements of this section, gives sufficient notice to the regulating officials (i.e., State RCRA and CAA officials). Since this is a self-implementing exclusion, in order to ensure delivery, the notification must be sent certified mail and until the notification of exclusion is received the waste is still a hazardous waste and must be managed as such. Only after the receipt of such notification that the hazardous waste-derived fuel meets the requirements of this rule is the waste excluded and free to be managed in accordance with the requirements for a comparable or syngas fuel. If a comparable/syngas fuel generator loses its exclusion, the generator must renotify for the exclusion, after coming into compliance with the requirements of this section. If necessary the generator must also comply with any applicable Subtitle C requirements for the waste.

a. EPA Regional or State Notification. Prior to managing any waste as an excluded comparable/syngas fuel under this section, the generator must send to, in States not authorized to implement this Section, the EPA Regional RCRA and CAA Directors, and, in authorized States, to the State RCRA and CAA Directors. The notification of the exclusion claim should be sent via

certified mail, or other mail service that provides written confirmation of delivery. Notification of the RCRA and CAA Directors will provide notification of the exclusion and appropriate documentation to both the RCRA and CAA implementing officials. The Agency's intent is for copies of the exclusion information to reach both the RCRA and CAA implementing officials because of the nature of this exclusion—a RCRA excluded waste being burned in CAA regulated units. If the comparable/syngas is to be burned in a State other than the generating State, then the comparable/syngas fuel generator must also provide notification to that State's or Region's RCRA and CAA Directors.

The notification shall contain the following items: (1) The name, address, and RCRA ID number of the person/facility claiming the exclusion; (2) the applicable EPA Hazardous Waste Codes for the hazardous waste; (3) the name and address of the units, meeting the requirements of § 261.38(c)(2), that will burn the comparable/syngas fuel; and (4) the following statement signed and submitted by the person claiming the exclusion or his authorized representative:

"Under penalty of criminal and civil prosecution for making or submitting false statements, representations, or omissions, I certify that the requirements of 40 CFR 261.38 have been met for all waste identified in this notification. Copies of the records and information required at 40 CFR 261.38(c)(10) are available at the comparable/syngas fuel generator's facility. Based on my inquiry of the individuals immediately responsible for obtaining the information, the information is, to the best of my knowledge and belief, true, accurate, and complete. I am aware that there are significant penalties for submitting false information, including the possibility of fine and imprisonment for knowing violations."

b. Public Notification. As a self-implementing exclusion effective upon receipt of the notification by the implementing authority, there is no decision prior to exclusion being made by the implementing authority regarding the waste. The opportunity exists at all times for the public to bring to the implementing authority's attention any circumstance that might aid that authority in its monitoring and enforcement efforts. The public, furthermore, would have the ability to bring a citizen suit for a claimant's failure to comply with any requirement of the exclusion. Based on comments received on the proposal, the Agency believes that requiring the comparable/syngas fuel burner to provide a simple public notification of an exclusion claim would aid the public in its efforts. In most cases, the Agency believes the burner will also be the generator of the fuel.

Therefore, under the final rule, the comparable/syngas fuel burner must submit for publication in a major newspaper of general circulation local to the site where the comparable/syngas fuel will be burned, a notice entitled "Notification of Burning of Comparable/Syngas Fuel Excluded Under the Resource Conservation and Recovery Act" containing the following information: (1) Name, address, and RCRA ID number of the claimant's facility; (2) name and address of the unit(s) that will burn the comparable/syngas fuel; (3) a brief, general description of the manufacturing, treatment, or other process generating the comparable/syngas fuel; (4) an estimate of the average and maximum monthly and annual quantity of the waste claimed to be excluded; (5) name and mailing address of the State or Regional Directors to whom the claim is being submitted. This notification must be published in the newspaper prior to the burning of the comparable/syngas fuel. Notification is only necessary once for each waste stream excluded.

c. Burner Certification. As proposed, the final rule requires comparable/syngas fuel to be burned only in units subject to Federal/State/local air emission requirements. The Agency believes that limiting the burning of comparable/syngas fuels to industrial furnaces or industrial boilers, or hazardous waste incinerators, along with a certification from the burner, would ensure that the fuel was burned in a unit subject to Federal/State/local air emission regulations. Industrial furnaces or industrial boilers, or hazardous waste incinerators are believed to be a universe of units that are capable of handling comparable/syngas fuels and that would be subject to Federal/State/local air emission requirements. In response to comments, the Agency believes that these excluded hazardous wastes are best handled and burned in the types of units specified in § 261.38(c)(2). To ensure that comparable/syngas fuels burned off-site are burned in a unit specified in § 261.38(c)(2) (see discussion below), the Agency is requiring the generator to obtain from the burner a one-time written, signed certification that: (1) The comparable/syngas fuel will be burned only in an industrial furnace or boiler, or hazardous waste incinerator subject to Federal, State, or local air emission requirements; (2) identifies the name and address of the units that will burn the comparable/syngas fuel; and (3) the state in which the burner is located is authorized to exclude wastes as comparable fuels (i.e., under the provisions of § 261.38). This requirement coupled with the requirement to notify the State or Regional Directors will enable regulatory officials to take any measure that may be appropriate to ensure that excluded fuel is burned in conformance with applicable regulations and so does not become part of the waste management problem.

If the generator or burner intends to change the unit where the comparable/syngas fuel is burned (i.e., burn a comparable/syngas fuel in a unit that has not previously been included in a certification), then prior to burning, the generator must again follow the requirements for: (1) Obtaining a burner certification; (2) notifying the public; and (3) submitting a revised notification to the State or Regional Directors. Once the revised notification has been received by the State or Regional Directors and the notification has been published in the newspaper, the generator/burner may burn the fuel as an excluded waste.

I. Exclusion Status

Some commenters requested clarification of the regulatory status of the comparable/syngas fuel if the conditions of the exclusion were not met. After the exclusion for a waste has become effective, the conditions of the exclusion must continue to be met in order to maintain the exclusion.

Separate and distinct from any requirement or condition established in this final rule, all generators—including comparable/syngas fuel generators under this exclusion—have a continuing obligation to identify whether they are generating a hazardous waste and to notify the appropriate government official if they are generating a hazardous waste. Section 3010; 40 CFR 262.11. If a comparable fuel claimed as excluded under today's rule fails to meet the exclusion requirements of sections § 261.38(a)–(c), that comparable/syngas fuel and subsequently generated comparable/syngas fuel would be required to be managed as a hazardous waste—including compliance with all notification requirements—until testing demonstrated that the waste was below the exclusion specifications.

A comparable/syngas fuel that is not ultimately burned remains a hazardous waste and is subject to all applicable Subtitle C regulations (unless another exclusion from RCRA applies). As stated

in the proposal, the only allowable treatment or disposal method for a comparable/syngas fuel is burning. Any disposal method other than burning is a RCRA violation, unless the comparable/syngas fuel is properly managed as a hazardous waste meeting applicable Subtitle C regulations. The implications of not burning are that any prior management of the waste was subject to Subtitle C requirements.

Excluded comparable/syngas fuel generators, transporters and burners are subject to the speculative accumulation requirements under § 261.2(c)(4). Thus, there must be turnover of a given percentage of comparable fuel stock each calendar year, and the persons holding such fuels must be able to demonstrate that such turnover is occurring. See § 261.2(f). Since ultimate users are notified that they are receiving comparable fuels, they may feasibly comply with this requirement by documenting how much such fuel is received when it is burned.

If a generator knows or should have known that a waste fails to meet the constituent specifications, the exclusion ends as of the point of determination and the material must be managed as a hazardous waste.

J. Recordkeeping

1. General

Some commenters believed that the recordkeeping requirements in the proposal were excessive, while others felt they were too lenient. The Agency, however, believes that because of the self-implementing nature of this exclusion, maintenance of the proper information on-site is essential to the proper implementation of the exclusion.

The final rule requires the comparable/syngas fuel generator to maintain the following files (see § 261.38(c)(10)) at the facility generating the fuel: (1) All information required to be submitted to the State RCRA and CAA Directors as part of the notification of the claim: (i) the name, address, and RCRA ID number of the person claiming the exclusion; (ii) the applicable EPA Hazardous Waste Codes for the hazardous waste; (2) a brief description of the process that originally generated the hazardous waste and process that generated the excluded fuel; (3) an estimate of the average and maximum monthly and annual quantities of each waste claimed to be excluded; (4) documentation for any claim that a constituent is not present in the hazardous waste as required under § 261.38(8); (5) the results of all analyses and all quantitation limits achieved for the fuel; (6) documentation as required for the treatment or blending of a waste to meet the exclusion specifications; (7) a certification from the burner if the waste is to be shipped off-site; and (8) the certification signed by the person claiming the exclusion or his authorized representative.

The generator must also maintain documentation of the waste analysis plan and the results of the sampling and analysis that includes the following: (1) the dates and times waste samples were obtained, and the dates the samples were analyzed; (2) the names and qualifications of the person(s) who obtained the samples; (3) a description of the temporal and spatial locations of the samples; (4) the name and address of the laboratory facility at which analyses of the samples were performed; (5) a description of the analytical methods used, including any clean-up and sample preparation methods; (6) all quantitation limits achieved and all other quality control results for the analysis (including method blanks, duplicate analyses, matrix spikes, etc.), laboratory quality assurance data, and description of any deviations from analytical methods written in the plan or from any other activity written in the plan which occurred; (7) all laboratory analytical results demonstrating that the exclusion specifications have been met for the waste; and (8) all laboratory documentation that support the analytical results, unless a contract between the claimant and the laboratory provides for the documentation to be maintained by the laboratory for the period specified in § 261.38(c)(11) and also provides for the availability of the documentation to the generator upon request. These records and those required for off-site shipments must be maintained for the period of three years. A generator must maintain a current waste analysis plan during that three year period.

2. Off-Site Shipments

The final rule requires that for each shipment of comparable/syngas fuel a generator sends off-site for burning in an industrial furnace or boiler, or hazardous waste incinerator, a record of the shipment must be kept by the generator on-site. Because these fuels are not required to be accompanied by a manifest, it is the Agency's belief, supported by commenters, that to ensure that comparable/syngas fuels are transported to and burned in only those units approved for such burning some type of tracking mechanism is warranted. Therefore, the final rule requires for off-site shipments the following information be maintained by the generator on-site: (1) The name and address of the facility receiving the comparable/syngas fuel for burning; (2) the quantity of comparable/syngas fuel delivered; (3) the date of shipment or delivery; (4) a cross-reference to the record of comparable/syngas fuel analysis or other information used to make the determination that the comparable/syngas fuel meets the specifications; and (5) the one-time certification by the burner.

K. Transportation and Storage

Commenters concurred with the Agency's belief that the Department of Transportation (DOT) and the Occupational Safety and Health Agency (OSHA) requirements for the transportation and handling of comparable/syngas fuels will be adequate to ensure the safe management of these excluded fuels. The final rule does not require comparable/syngas fuel handlers to comply with the RCRA storage and transportation requirements. It should be noted that excluded comparable/syngas fuel transporters are required to comply with all applicable requirements under the U.S. Department of Transportation regulations in 49 CFR parts 171 through 180.

Anyone who stores an excluded comparable/syngas fuel (e.g., generator, transporter, burner) is required to comply with all applicable requirements under the Occupational Safety and Health Agency regulations in 29 CFR part 1910. The occupational safety and health standards for flammable and combustible liquids can be found in Subpart H—Hazardous Materials section 1910.106 and standards for compressed gases in section 1910.101.

L. Comparable Fuels Exclusion and Waste Minimization

1. Introduction

In its April 1996 NPRM (61 FR 17464), EPA solicited comment on the effects of the comparable fuels provision on facilities' efforts to promote pollution prevention and waste minimization measures (i.e., source reduction and environmentally sound recycling). In particular, EPA wanted to determine the extent to which companies might: (1) Shift from hazardous waste recycling practices to burning wastes as fuel in broader markets; (2) continue to recycle these wastes for product recovery; (3) undertake source reduction for those wastes currently failing the comparable fuel specifications; or (4) continue to burn the excluded waste fuel in either an hazardous waste incinerator, light weight aggregate kiln, or cement kiln.

EPA received many comments on this issue, most of which indicated there

would probably be a shift from recycling toward combustion, but the Agency received very little quantitative information that would allow the Agency to assess the extent and impact of potential shifts. Consequently, EPA used data from the RCRA Biennial Reporting System, which is a census of waste stream information from all large quantity hazardous waste generators, and the National Hazardous Waste Constituent Survey (NHWCS), which contains data on the composition and properties of waste streams for certain industries, to develop two approaches for assessing the impacts of the comparable fuels provision on pollution prevention and recycling. This approach is described in the next section.

The results of EPA's analysis conclude that about three-fourths of hazardous wastes now meeting the comparable fuels specifications are already being combusted; the remainder (about one-fourth) is recycled. The 70,000 tons of hazardous wastes, that qualify for the comparable fuels exclusion and are currently recycled annually, could shift to the comparable fuels market, if all generators responded the same way, a possibility which seems unlikely. This figure represents less than a one percent annual increase in the amount of hazardous waste combusted, but it represents a decrease of about 20% in the amount of hazardous wastes recycled annually.

If the comparable fuels provision were implemented alone, a 20% decrease in recycling might appear to have a negative effect on pollution prevention and waste minimization. However, as one commenter pointed out, some generators will install pollution prevention and waste minimization measures (i.e., to prevent high levels of constituents from becoming part of the waste) in order to qualify for the comparable fuels exclusion. This would have the effect of increasing pollution prevention. Furthermore, EPA fully expects that the increased cost of upcoming MACT standards will cause the regulated community to seek cost effective pollution prevention and waste minimization solutions to offset the higher costs (a response seen, for example, in the RCRA land disposal restrictions program). EPA is examining this effect in the regulatory impact analysis for the upcoming MACT standards. On balance, the impact of the comparable fuels provision on pollution prevention and waste minimization in the context of MACT standards appears to be negligible.

2. Major Concerns of Commenters

EPA received comments generally expressing either concerns or support for the exclusion. There was some concern that the comparable fuels exclusion would lead to combustion of spent solvents and other high-energy wastes low in halogens and metals that would otherwise be recovered as product. Conversely, others supported the exclusion pointing to incentives it may create to source reduce and conserve resources by replacing fossil fuels with comparable fuels. In addition, concerns were raised over the role of energy recovery in the waste management hierarchy, and the impact of fuel blending on comparable fuels.

Impact on Source Reduction and Recycling: Several commenters stated that EPA failed to investigate whether the comparable fuels exclusion would encourage combustion of wastes now being recycled. Some of these commenters took positions on how the comparable fuels exclusion would impact the recycling-combustion balance. One group claimed that the comparable fuels exclusion would encourage combustion at the expense of recycling. A smaller group of commenters stated that the comparable fuels exclusion would offer an incentive for generators to use more source reduction to lower the levels of toxic constituents to the specification levels. The commenters provided little quantitative information describing these changes.

As noted above, EPA used data from the RCRA Biennial Reporting System (BRS), which is a census of waste stream information from all large quantity hazardous waste generators, and the National Hazardous Waste Constituent Survey (NHWCS), which contains data on the composition and properties of waste streams for certain industries, to develop two approaches for assessing the impacts of the comparable fuels provision on pollution prevention and recycling. Results from both analyses indicate that about three-fourths of wastes likely to meet the comparable fuel specifications are already combusted rather than recycled, and that the remaining wastes could shift from the current recycling market to the comparable fuels depending on the economics and individual company preferences. The methodologies used are summarized below. A full discussion of these analyses is provided in the docket.

Analysis #1: EPA searched the 1993 BRS data to identify waste streams that would be most likely contain wastes that could meet comparable fuel specifications for energy value and low levels of contaminants. EPA focused its search on D001/ignitable wastes because this waste typically contains spent nonhalogenated solvents. EPA also used the BRS data to determine how these wastes were managed after generation, and found that about three-fourths of D001 wastes are combusted, while the remaining one-fourth goes to recycling for solvent recovery.

Analysis #2: Using waste stream specific laboratory analysis data from the NHWCS, EPA identified those waste streams in the survey that meet the comparable fuels specifications for about half of the recycled wastes reported in the BRS. Using this data, EPA was able to estimate the total amount of recycled wastes that could be comparable fuels, and how much waste currently sent to combustion meets the comparable fuels specifications. Analysis of these estimates indicates that about 75% of waste streams meeting the comparable fuels criteria is combusted while the remainder is recycled.

The "Economic Analysis Report for the Combustion MACT Fast-Track Rulemaking" (contained in the docket) predicts savings to generators who can begin to combust hazardous wastes as comparable fuels rather than as hazardous wastes. EPA believes this offers generators incentives to achieve the comparable fuels specifications through source reduction. However, since the costs of source reduction initiatives vary widely from facility to facility, EPA could not reliably estimate net cost savings that facilities could achieve by turning hazardous wastes into comparable fuels through upstream source reduction. Therefore we did not attempt such an estimation.

In addition, many solvent recycling facilities could begin to combust streams meeting the comparable fuels specifications instead of continuing to recycle them. EPA's comparison of recycling costs and revenues with costs for combusting these streams as comparable fuels indicate that in many cases facilities may find the combustion option more economical. Since solvent recycling costs and revenues vary considerably from facility to facility and also fluctuate in time according to the market values of virgin solvent (fuel costs also fluctuate), EPA could not and did not estimate the extent of this shift. Individual facilities may continue to recycle wastes rather than combust them as comparable fuels.

Recycling and the Waste Management Hierarchy: Some commenters stated that letting wastes similar to fuels be burned is evidence of an Agency preference for

combustion over recycling. EPA disagrees: The comparable fuels exclusion is based on the fact that some hazardous waste fuels very closely resemble fossil fuels and do not warrant the full slate of RCRA Subtitle C controls. This does not suggest that the Agency has altered its commitment to the hierarchy. The underpinning of the comparable fuels exclusion is simply a determination on the degree of regulatory oversight needed for fuel-like waste materials, which does not translate to any change of view on the waste management hierarchy.

Burning for Energy Recovery: Some commenters claim that burning for energy recovery is waste minimization. While EPA is clearly providing greater flexibility to burn wastes that closely resemble virgin fuels, EPA distinguishes this from waste minimization. Waste minimization includes source reduction and environmentally sound recycling, but does not include any "method, technique, or process, including neutralization, designed to change the physical, chemical or biological character or composition of any hazardous waste so as to neutralize such waste, or so as to recover energy or material resources from the waste, or so as to render such waste non-hazardous, or less hazardous; safer to transport, store or dispose of; or amenable for recovery, amenable for storage, or reduced in volume." (40 CFR 260.10)(emphasis added).

Blenders and Third Parties: Some commenters expressed concern that EPA would allow blending of hazardous wastes to meet the concentration specifications for a comparable fuel, thereby raising the issue of dilution to avoid RCRA regulation. Similarly, commenters objected to allowing third parties, such as fuel blenders, to handle and blend wastes between generation and combustion. Commenters pointed out that blending and third-party involvement would constitute impermissible dilution. It would also undermine any incentive to minimize the volume or toxicity of these wastes. The Agency agrees that blending hazardous wastes to bring them within the comparable fuels concentration specifications would constitute dilution which is not only impermissible but also would likely inhibit waste minimization. Today's rule explicitly prohibits any blending or other "treatment" which does not remove or destroy hazardous constituents. Blending of two wastes already meeting the comparable fuels specifications is, however, allowed only to achieve the viscosity specification. The rationale for this limited use of blending is discussed in that section of today's preamble.

Opportunities for Source Reduction: One commenter commented that the Standards for the Management of Used Oil (40 CFR Part 279) offered generators an incentive for keeping used oil streams clean by requiring oil exceeding certain concentration specifications for metals and chlorine to be managed as hazardous waste, and predicts that the comparable fuels exclusion will result in similar incentives for source reductions to achieve the comparable fuel exclusion criteria, particularly for generators of D001 (ignitable) wastes. EPA agrees with this view, but did not receive industry-specific information from commenters with which to complete an analysis of this issue.

IV. RCRA Permit Modifications for Hazardous Waste Combustion Units

A. Introduction

The Clean Air Act (CAA) sets a maximum time frame of three years for facility owners or operators to comply with Maximum Achievable Control Technology (MACT) emission standards once final standards are published in the **Federal Register**. EPA expects that many facility owners or operators will need to make changes to their process(es) in order to come into compliance with the new standards. For facilities operating under a RCRA permit, these changes may have to be incorporated into the permit before they may be put in place at the facility. To facilitate meeting the three year deadline, EPA is revising the RCRA permit modification procedures to explicitly address changes to a facility's design or operations that are necessary to comply with the new MACT emission standards. The revised modification process offers streamlined procedures that will help facility owners and operators meet two compliance concerns—compliance with their RCRA permits and compliance with the new MACT standards.

EPA anticipates that a substantial number of requests to modify facility design or operations will be submitted in a relatively short period of time following promulgation of the final MACT standards. Although the states could always use their current modification process, the revised procedures offer a potentially more viable way for states to handle the anticipated volume of requests in a more timely manner.

In most cases, state permitting agencies have been authorized by EPA to issue and modify RCRA permits. Authorized states that wish to implement the revised procedures may have to modify their state procedures, consistent with today's rule, before they may use the streamlined procedures to respond to MACT-related modification requests from facility owners or operators. Once the final MACT standards are promulgated, facility owners and operators have three years to begin operating under the lower emissions levels. The Agency believes that these three years are better used for processing modification requests, and subsequently implementing the necessary changes, than for modifying state regulations and going through the authorization process. By promulgating the revised procedures on an expedited schedule (i.e., before the final MACT standards), EPA hopes to provide ample time for states to develop comparable standards and obtain EPA authorization before they need to process MACT-related modification requests from facility owners or operators. It should be noted that states which currently have temporary authorization procedures equivalent to the federal 40 CFR 270.42(e) procedures may also use these, in many cases, to approve facility changes needed to come into compliance with MACT standards. However, these procedures would allow operation under the modified conditions only up to 180 days (with a possible extension of up to 180 additional days), followed by a full class 2 or 3 permit modification. Therefore, EPA encourages states to adopt procedures comparable to those in today's rule.

Combining the streamlined modification procedures with the expedited schedule for promulgating them sets up a procedural framework to promote compliance with the MACT standards. But even this combination does not guarantee that other factors will not ultimately interfere with a facility's efforts to comply. As part of a common sense approach to implementing, and enforcing, its programs, EPA would like to make sure that the consequences of non-compliance are commensurate with the causes. With regard to the three-year deadline for operating under the lower emissions levels required by MACT, EPA is further examining potential consequences of non-compliance, particularly if the causes are beyond the facility's control (e.g., a permitting agency's administrative procedures or workload cause delays, necessary equipment is back ordered, or testing contractors are unavailable). For example, the Agency is looking into the possibility of using standard

enforcement procedures under the Clean Air Act (CAA), rather than requiring more stringent consequences through regulations (e.g., requiring a facility to stop burning hazardous waste until it receives a permit or revoking a permit). The potential consequences of non-compliance are discussed in more detail in the Revised Technical Standards for Hazardous Waste Combustion Facilities; Proposed Rule, Notice of Data Availability (62 FR 24212, May 2, 1997).

EPA is not going to pursue any of the three companion implementation options discussed in the proposed rule (see 61 FR 17456, April 19, 1996). Those options were intended to address possible permit implementation conflicts which may have occurred if a State did not become authorized to carry out the provisions of the proposed MACT rule in time to handle necessary modifications. By promulgating the revised modification procedures prior to the remainder of the proposed rule, EPA anticipates that States will have adequate time to receive authorization to process the requisite modifications. Thus, the need to put in place a separate implementation mechanism no longer exists. Today's rule does not address any of the longer-term implementation options discussed in the proposed rule (e.g., placing the MACT standards in a Clean Air Act permit, in a RCRA permit, or in both permits). Implementation will be discussed in the final rule promulgating revised standards for hazardous waste combustors.

B. Overview

1. Background on RCRA Permit Modification Procedures

Section 3004 of RCRA requires owners and operators of facilities that treat, store, or dispose of hazardous waste to comply with standards that are "necessary to protect human health and the environment." EPA, or EPA-authorized States, implement these standards by issuing RCRA permits to these types of facilities. Once a permit has been issued to a facility, the facility must operate in compliance with the conditions in the permit; any subsequent changes to the facility's design or operations are incorporated into the permit in accordance with the Agency's, or authorized State's, permit modification procedures.

EPA's regulations concerning permit modifications requested by facility owners or operators are set forth in 40 CFR 270.42. The regulations break the types of potential modifications into three classes (see § 270.42 Appendix I). Class 1 modifications cover administrative or routine changes, including replacing equipment with functionally equivalent equipment. They are relatively straightforward and in most cases do not require Agency approval before being made. Class 2 modifications cover somewhat more complex changes, for example, to address common variations in the types and quantities of wastes managed, where the changes can be implemented without substantially altering the design specifications or management practices prescribed by the permit. Class 3 modifications involve substantial changes to facility operating conditions or waste management practices and are subject to principally the same review and public participation procedures as permit applications. Each class of modification request requires varying degrees of facility preparation, Agency review time, and public involvement. The various degrees have a significant impact on the amount of time needed to put the change into effect. For example, Class 1 modifications typically can be implemented in a very short time, where Class 2 and 3 modifications may take several years.

Prior to promulgating the Class 1, 2, 3 procedures, modifications were divided into two categories, major and minor. States authorized to implement the RCRA program were not required to adopt the Class 1, 2, 3 procedures, since they were considered less stringent than the predecessor major/minor system. As a result, both systems are in use today. EPA would like to point out that, in converting to the new system, many of the modifications that had been designated as minor were placed into Class 1, or Class 1 with prior Agency approval. EPA presumes that modifications listed in Appendix I as Class 1, or Class 1 requiring prior Agency approval, are most likely processed as minor modifications in states that continue to use that system.

2. Shortcomings of the Current Procedures

EPA did not consider, in developing the modification classes and procedures, that changes to RCRA permit conditions might be necessary in order to comply with other environmental statutes. Similarly, the Agency did not anticipate changes to comply with upgrades to existing regulations (although the process was developed to include changes for new regulations). EPA developed the Class 1 through 3 modification scheme within the context of the RCRA program to provide both incentives to facility owners and operators to pursue facility changes that lead to improved management of hazardous wastes, and greater flexibility for timely processing of change requests, e.g., by tailoring the level of review to the type of change (see Permit Modifications for Hazardous Waste Management Facilities; Final Rule, 53 FR 37912, September 28, 1988). EPA is now concerned, however, that the RCRA permit modification procedures, as a practical matter, will not allow enough time to meet statutory deadlines for implementing new standards under the Clean Air Act.

3. How Today's Rule Impacts the Procedures

EPA proposed several options for amending RCRA permit modification procedures to accommodate the Clean Air Act requirement that facilities comply with MACT standards within three years of publishing a final rule in the **Federal Register** (61 FR 17454, April 19, 1996). In all five of the proposed options, the Agency tried to balance the need to develop a process that would enable facilities to comply with more stringent emissions standards within the allotted time with the need to provide adequate opportunities for public participation in the process. The level of regulatory oversight that would take place under each option was also discussed. The Agency requested comments on the proposed options, as well as on any combinations thereof, or any other feasible approaches.

EPA has decided to finalize, with some adjustments, its originally proposed recommended approach, i.e., to establish a new section in the permit modification table for changes to existing permit conditions necessary to come into compliance with MACT standards. This approach best meets the Agency's objective of implementing a process that enables facilities to meet the three year statutory deadline. This approach also allows for public notification of the modification request.

Today's final rule establishes a new section in Appendix I of 40 CFR 270.42 for technology changes that are necessary for a facility to achieve compliance with the MACT standards. The new section is designated as Class 1 modifications, with prior Agency approval. As such, the Agency will have an opportunity to review the proposed physical and operational changes to the facility before they are implemented, in order to ensure that these changes do not have other undesirable consequences. Agency experience suggests that steps intended to reduce emissions may not, in all cases, lead to overall enhanced environmental protection. For example, decreasing combustion temperature as a way to

decrease air pollution control device (ACPD) inlet temperature, in order to reduce dioxin emissions could increase organic emissions by allowing poor combustion.

The new section in 40 CFR 270.42 Appendix I, specifically, section L(9) "Technology Changes Needed to Meet MACT Standards Under 40 CFR Part 63 Subpart EEE—National Emissions Standards for Hazardous Air Pollutants From Hazardous Waste Combustors," is limited to technology changes to existing permits to allow a facility to come into compliance with the new Part 63 standards. General retrofitting changes outside the framework of meeting MACT-related technology, or subsequent changes for maintaining compliance with Part 63 standards, are outside the scope of this category. The permitting agency director will determine whether the types of modifications requested qualify as "technology changes needed to meet standards under 40 CFR part 63 Subpart EEE." The Agency anticipates that the distinction between technology changes necessary to allow a facility to operate under the lower emissions levels and general retrofitting changes will be clear. EPA expects that the same types of changes to comply with the MACT standards will be needed at most facilities, thus the requests submitted under section L(9) should be fairly uniform.

EPA, in response to public comments, is also incorporating a time default into the modification procedures for changes requested under section L(9) only. Section 270.42(a) is being amended to add a paragraph specifying that the permitting agency Director has 90 days, with a possible one-time 30 day extension, to make a decision about modifications requested under section L(9). If the Director does not make a decision, then the permittee may consider the request approved. EPA is also requiring owners or operators to comply with the requirements for the Notification of Intent to Comply (NIC) (see 40 CFR 63.1211) in order to benefit from the streamlined modification process.

C. Discussion of RCRA Permit Modifications Procedures for Facilities Coming Into Compliance With MACT requirements

1. Summary of Proposed Options

EPA is in the process of developing final MACT standards imposing more stringent (lower) emissions levels for hazardous waste combustion activities; facilities will have to operate in compliance with these standards within three years of their promulgation, with a possible one year extension (for a total of four years). The Agency expects that a large number of facilities will need to modify their design or operations to meet the more stringent emissions standards required under MACT. For example, incinerators that currently operate above the MACT emissions standard for particulate matter (PM) might have to add electrostatic precipitators (ESP) or baghouses to reduce emissions; similarly, incinerators that need to reduce dioxin emissions to meet the MACT standards may need to implement additional controls on temperature or employ carbon injection; or light weight aggregate kilns (LWAKs) with high acid gas emissions may need to add a control technology, such as wet scrubbers.

For these facilities to remain in compliance with their RCRA permits, they will need to modify their permits to allow any design or operational changes needed to achieve compliance with the MACT standards. The Agency proposed five options for handling these "MACT related" RCRA permit modifications. The options, which varied with regard to the level of procedural requirements and administrative review required, were: (1) Provide facilities with "self-implementing" authority to proceed with necessary changes without Agency review; (2) categorize the changes needed to comply with MACT standards as Class 1 modifications that do not require prior Agency approval; (3) categorize the changes as Class 1 modifications that do require prior Agency approval (this option was discussed in the proposal as the recommended option); (4) categorize the changes as Class 1 modifications requiring prior Agency approval, but give the Director authority to elevate change requests to Class 2; and, (5) retain the current scheme for modifying the RCRA permits. Under the current scheme, the MACT-related changes would likely be categorized as Class 2 or 3 modifications.

2. Summary of Public Comments

In general, there were three recurring themes in the comments received by the Agency in this area. First, commenters expressed concern about being able to meet the three year time frame. They cited, as reasons, (1) that three years are insufficient to allow state agencies to obtain authorization for the rule and to subsequently process the anticipated volume of modification requests, and (2) that the modification procedures themselves are too long. Secondly, commenters emphasized the need to allow sufficient public participation, but with the caveat that the modification process not be unduly delayed by public participation activities (this being yet another factor in potentially being unable to meet the three year deadline). Finally, commenters were concerned that the consequences of non-compliance are too severe (e.g., having to stop burning), given that delays in achieving compliance could be the result of permitting agencies being unable to process modification requests in a timely manner (and not a consequence of the facility's activities).

The Agency received a wide variety of comments on the options themselves. Each of the proposed options received support, with most commenters favoring the first three options for their more streamlined procedures. A few commenters suggested that incorporating a time limit into the modification review process would aid in coming into compliance with the MACT standards. Many commenters expressed the importance of developing a streamlined permit modification process that would allow facilities to make the necessary technology upgrades in a timely fashion, while retaining enough regulatory oversight to ensure that the changes have a proper degree of "buy-in" by the permitting agency. Some commenters expressed concern that options 4 and 5 would delay implementation of MACT-related changes beyond the three year deadline mandated by Congress. A few commenters preferred options 4 and 5 since they incorporate a greater degree of public participation into the review process. Additionally, some commenters thought that options 4 and 5 might be more readily accepted by and implemented in authorized States that chose to remain with the original permit modification structure composed of minor and major changes. [Note: States were not required to adopt the Class 1, 2, 3 structure since it was determined to be less stringent than the major/minor structure.]

Finally, some commenters requested that the Agency consider as a possible alternative that a Class 3 modification could be reclassified as Class 2 for the purposes of MACT compliance.

3. Response to Comments and Discussion of Final Provisions

EPA agrees with commenters that streamlined modification procedures for MACT-related changes are essential. The three year time frame for complying with the MACT standards has been set by Congress; it is the Agency's responsibility to ensure that facilities are able to comply with those

requirements without violating other areas of their environmental responsibilities, like their RCRA permit. As discussed earlier, EPA anticipates that many facilities will need to make some changes to meet the lower emissions levels imposed by MACT, and that these changes will have to be incorporated into their RCRA permits. EPA does not want the RCRA permit modification procedures to hinder a facility's ability to comply with MACT.

As discussed in the Section B.1. Background on RCRA Permit Modifications Procedures, Class 1 modifications may be done quickly, whereas Class 2 or 3 modifications may take several years to process. The combination of the time normally required to completely process Class 2 or 3 modification requests, and the anticipated volume of requests from facilities striving to meet MACT emission levels, would make meeting the three year deadline unrealistic. Permitting agencies would not have the resources to meet the workload demand. This leads EPA to concur with commenters on the need to embrace a more streamlined approach than would be provided by options 4 or 5. Similarly, EPA chose not to pursue the option suggested by some commenters to reclassify changes from Class 3 to Class 2. A streamlined approach is consistent with general efforts within the Agency (e.g., through the Permits Improvement Team) to improve the permitting process by focusing on performance standards rather than on a detailed review of the technology requirements.

The Agency acknowledges the validity of the concerns expressed by some commenters that the options offering the more streamlined procedures offer fewer opportunities for public participation. It is important to strike an appropriate balance between streamlined modification procedures that promote coming into compliance sooner with more stringent standards and public participation. The Agency has repeatedly emphasized its commitment to a common-sense approach to permitting—one that minimizes regulatory burden and provides flexibility to tailor activities to specific situations. In carrying this commitment to today's rule, EPA wants to ensure three things: (1) that the permit modification process is not an obstacle for complying with the MACT standards; (2) that facilities are not forced to operate outside of their permitted conditions in order to comply with MACT standards; and (3) that public participation is not streamlined out of the process.

EPA believes that Option 3, with some modifications, provides the best framework for meeting these objectives and responding to public comments. This option was supported by many commenters, particularly because the streamlined procedures will facilitate meeting the three year deadline for complying with the more stringent emission levels. There has been a precedent set in the past for streamlining the modifications process. To ensure that facilities implemented timely changes necessary to meet land disposal restriction (LDR) levels for newly listed or newly identified hazardous waste, the Agency designated the modifications needed to meet the LDR levels for newly identified wastes as Class 1 modifications (see 54 FR 9596, March 7, 1989).

The prior agency approval under Option 3 provides the regulatory oversight requested by commenters, since the permitting agency will have the opportunity to review the proposed physical and operational changes to the facility before they are implemented. EPA concurs with commenters who encouraged retaining some amount of regulatory oversight in the modifications. As discussed previously, sometimes changes to one part of a facility's design or operations that have a positive effect, like reducing one type of emissions, may cause detrimental effects to other parts of the facility's operations. It is important for permitting agencies to have the opportunity to review proposed changes to make sure they do not lead to other undesirable impacts.

Some commenters expressed concern, however, that a facility's ability to begin implementing the change(s) might be delayed by requiring regulatory oversight (i.e., if the Agency failed to respond to the request in a timely manner). EPA recognizes the validity of this concern, given the anticipated volume of requests from facilities striving to meet the new emissions standards; therefore, the Agency is incorporating a time default for reviewing the requests into the final modification process. The time default for review, codified in a new paragraph 270.42(a)(4), specifies that if a determination to approve or deny the Class 1 permit modification request submitted under item L(9) is not made within 90 days (with the possibility of a one-time extension for up to 30 days) from the time the request was received by the permitting agency, the request is to be considered approved, and the facility can proceed with the modification(s). In some situations, the Director of the permitting agency may deny a request, for example, if the request contained insufficient information upon which to base a decision. The permittee could revise its request to address the shortfalls and resubmit it to the permitting agency. Such a resubmittal would initiate a new 90 day review period.

EPA anticipates that the incorporation of the time default, coupled with the fact that the revised modification procedures are being promulgated on an expedited schedule, will alleviate commenters' concerns about non-compliance. Although the consequences of non-compliance are outside the scope of this rule, this approach (streamlined modification procedures coupled with expedited promulgation) establishes a procedural framework through which there is a greater chance that permitting agencies will not cause undue delays in facilities' compliance with the MACT standards. Under the new streamlined process, permitting agencies should be able to process the modification requests with sufficient time remaining for facility owners or operators to make the changes within the three year time frame.

Some commenters expressed concern that option 3 does not provide the same levels of public participation that would be available through options 4 and 5. Those options would require facilities to request Class 2 or 3 permit modifications for MACT-related changes. The procedures for Class 2 and 3 modifications include public meetings, notices, and comment periods. Class 1 modifications, even those requiring prior Agency approval, only require that the facility owner or operator send a notice of the change to the facility mailing list within 90 days of approval being given.

EPA is committed to enhancing public participation in all of its processes, and has established additional requirements in today's rule to provide opportunities, beyond the public notice requirements associated with Class 1 (with prior approval) modifications, to involve the public in permitting changes required to comply with MACT standards. These opportunities are being incorporated into requirements for a Notification of Intent to Comply (NIC), discussed in more detail in Section V. One goal of the NIC development process is to promote interaction between the facility and its host community, for example, by requiring the facility to host an informal meeting with the community before submitting the final NIC to the permitting agency. Since the NIC must describe anticipated activities for coming into compliance with the MACT

standards, the technology changes that trigger the RCRA permit modification would be a natural component of the NIC and the public meeting. EPA expects that the meeting will be similar in style and intent to the pre-application meetings required under 40 CFR 124.31.

The final rule requires facility owners or operators to complete the NIC in order to benefit from the streamlined modification procedures. This requirement means that owners or operators will need to submit a final NIC either before, or at the same time as, they submit the modification request. If they do not comply with the NIC requirements, they will need to follow the otherwise applicable modification scheme, i.e., the permitting agency Director will likely reclassify their request to Class 2 or 3. EPA is not requiring documentation in the modification request that the permittee completed the NIC. Since both items are submitted to the permitting agency, EPA assumes the permitting agency will be aware of whether the permittee has indeed complied with the NIC requirements.

EPA expects that information about anticipated changes to facility design or operations to comply with the more stringent standards will be included in the NIC, and thus will be available for public review and discussion during the NIC public meeting. Through this meeting, communities have an early vehicle for learning, among other things, about potential changes to facility design and operations necessary to meet the lower emission levels. Of course, in accordance with the current requirements concerning Class 1 modifications, the permittee must also inform the public about the modifications within 90 days of their approval by the permitting agency (see 40 CFR 270.42(a)(1)(ii)).

EPA would like to point out that although similar information about facility design or operation changes may be included in both the NIC and the modification request, the Agency does not believe it is redundant to have both documents. The two have different purposes, and the formats and levels of detail may differ accordingly. The modification request would most likely differ from the NIC, since the request has to tie directly to the permit itself. For example, the NIC may talk in general terms about adding baghouses to reduce emissions, but the modification request would have to specifically cite the section(s) of the permit being modified to include information on the baghouses.

Today's requirements would not, of course, preclude additional public participation activities beyond the regulations, where appropriate on a facility-specific basis. At certain RCRA facilities, in fact, permitting agencies and facilities have implemented a variety of public involvement activities, such as additional fact sheets or information availability sessions, that have helped affected communities to understand and participate in permit decision-making. EPA has published a practical how-to guidance manual designed to help all stakeholders in the permitting process (permit writers, industry, and communities) determine what types of public participation activities might be helpful. The RCRA Public Participation Manual (EPA530-R-96-007, September 1996) also offers tips on how to conduct a wide variety of activities. Supplemental public participation activities on a site-specific level, geared for a particular facility's operations and tailored to meet the host community needs, could be used to augment community understanding of the changes taking place to comply with MACT standards. In closing, EPA would like to reiterate that facilities are making changes to meet more stringent standards. Requiring facilities to comply with lower emissions levels in a relatively short time frame does offer significant benefits to public health and the environment that the Agency believes communities will generally welcome.

In response to the comments that options 4 and 5 might be more compatible with permit modification procedures in authorized states, EPA is aware that States have to evaluate new regulations in terms of their specific structures. Promulgating the revised modification procedures in today's rule, however, will provide ample time for states to obtain authorization before they actually begin processing modification requests following promulgation of the final MACT standards. EPA encourages states to expedite their requests for authorization to implement the provisions in today's rule. EPA expects that States using the Class 1, 2, 3 modification system would incorporate the provisions by reference, and that States using the major/minor system would incorporate the provisions as minor modifications. As discussed in Section B.1. Background on RCRA Permit Modification Procedures, many changes that were formerly classified as minor were converted to Class 1, or Class 1 requiring prior Agency approval. Thus, EPA believes it is consistent for states using the major/minor system to incorporate this category of changes into the minor classification.

If the states cannot adopt an approach that ensures expeditious implementation of the MACT standards, however, then the Agency expects that changes necessary to comply with MACT standards may well be accomplished under a compliance order, with a specified schedule to come into compliance.

F. RCRA Changes in Interim Status Procedures

RCRA facilities operating under interim status are allowed to implement certain facility changes in accordance with requirements and procedures set forth in 40 CFR 270.72(a). (Note: EPA anticipates that the types of changes a facility may need to make to comply with the MACT standards would be allowable under this section). Section 270.72(b) imposes a limit, however, by stating that the changes cannot amount to "reconstruction" (defined in the regulation as "when the capital investment in the changes to the facility exceeds 50 percent of the capital cost of a comparable entirely new hazardous waste management facility"). As discussed in the preamble to the proposed rule, the Agency does not anticipate that the costs to perform facility changes necessary to come into compliance with the MACT standards would exceed the 50 percent reconstruction limit. However, since the limit is cumulative for all changes at the interim status facility, there could conceivably be situations where the cost for MACT-related changes might push a facility over the limit.

To ensure that the reconstruction clause does not present an obstacle for interim status facilities trying to implement changes to meet the new emissions levels, the Agency proposed adding a new paragraph to § 270.72(b) exempting changes necessary to comply with the MACT standards from the reconstruction limit. The Agency did not receive any adverse comments, and so is finalizing this provision in today's rule.

It is important to note that facilities operating under interim status will, like permitted facilities, be required to comply with the NIC requirements. Thus, the public will have the opportunity to review planned changes as part of the NIC and to participate in the public meeting. EPA anticipates that owners or operators of interim status facilities will hold the meeting and complete the NIC before proceeding with any changes to facility design or operations necessary to comply with the MACT standards.

V. Notification of Intent To Comply and Progress Report

A. Background

In the proposed rule (61 FR 17358), the Agency requested comments on strategies to identify and encourage or require affected sources to comply with the final emission standards at the earliest possible date. The Agency also asked for views on how best to determine when a source can realistically conclude whether it will comply with the final standards. A number of commenters suggested that the Agency require a submission from affected sources that would identify whether the facility intends to comply with the final standards, and outline the procedures the facility would employ to achieve compliance. This primary purpose of this submission (referred to by the commenters as a "Notification of Intent to Comply") would be to identify the sources that will choose as a compliance strategy to stop burning hazardous waste, so that those sources could be required to terminate waste burning activities as soon as possible following the effective date of the final Hazardous Waste Combustor (HWC) rule.

Other commenters suggested that EPA require submission of a plan that outlines the procedures a facility will follow to comply with the final standards. However, the purpose of this submission would be to begin an early process of communication between the public and the facility through the public disclosure of the facility's compliance strategy to meet the final HWC standards.

The Agency reviewed these comments and found the suggestions for an early notification persuasive. In the Notice of Data Availability (NODA) published in the **Federal Register** on May 2, 1997 (Revised Technical Standards for Hazardous Waste Combustion Facilities; Proposed Rule, 62 FR 24241), EPA described its strategy to promote early compliance planning through a Public and Regulatory Notice of Intent to Comply (PRNIC). The discussion laid out a process by which an affected source would be required to develop a draft document including anticipated plans for coming into compliance with the new emissions standards, hold an informal meeting with the public to discuss the draft planning document, and to subsequently provide a final planning document to the permitting agency. The information to be covered in the document and during the meeting would include such topics as a description of waste minimization and pollution control technique(s) being considered and their effectiveness, a description of emission monitoring techniques being considered, and an outline of key dates for activities the source would need to accomplish in order to operate within the MACT standards.

The intended purpose of the PRNIC, as described in the NODA, was twofold. First, the PRNIC was intended to provide for public involvement in a source's compliance planning process. EPA envisioned that this involvement would also serve to offset public participation opportunities that may be "lost" if a source is able to take advantage of the new streamlined RCRA modification procedures for HWCs, since modifications required under RCRA would naturally be part of the source's overall plan for achieving compliance with the standards. Secondly, the PRNIC would provide an expeditious notice to the permitting Agency as to whether sources would be able to come into compliance with the new standards. Having information about plans for compliance might prove helpful to permitting agencies in planning the most efficient use of their resources during the three year compliance period.

B. Summary of Final Provisions

EPA is moving forward with an early compliance planning requirement. However, the final rule contains certain changes from the PRNIC discussed in the NODA; the Agency has revised the requirements based on public comments received following the NODA's publication and based as well on the original proposal. EPA is finalizing new requirements in § 63.1211 for facility owners and operators to develop and submit a Notification of Intent to Comply (NIC), and in § 63.1212 to develop and submit a Progress Report. Section 63.9(h) "notification of compliance status" requires facilities to submit such notification when a source becomes subject to a relevant CAA standard. As such, today's requirement is an enhancement of this requirement to give notification of intent to comply prior to the three year compliance date of the emissions standards. The source can use the NIC to notify either the source's intent to come into compliance with the new standards, or the source's intent not to come into compliance with the new standards. The NIC must be submitted to the permitting agency within a year of the final standards being promulgated, and the Progress Report within two years.

As proposed, the primary purpose of the NIC is to serve as a planning and outreach tool for achieving compliance with the MACT standards. The contents of the NIC, set forth in § 63.1211(a)(1), are similar to those presented in the NODA discussion on the PRNIC with modifications based on comments received on the NODA. Also as discussed in the NODA, sources will have to make a draft of the document available to the public as part of the process of developing the NIC. They will also have to provide notice of and conduct an informal meeting with the public to discuss anticipated plans for achieving compliance with the standards. The purpose of the Progress Report is to help permitting agencies determine if sources are making reasonable headway in their efforts to come into compliance. In deciding on this approach to compliance planning—the NIC followed by the Progress Report—EPA determined (1) that one year is sufficient time for a source to establish its general "plan of attack" for achieving compliance, and (2) that during the second year a source should be well on its way to making necessary modifications, if it plans to meet the MACT limits, or to making alternate arrangements for handling the hazardous waste, if it does not intend to meet the MACT limits.

The final rule does not contain provisions for updates to the final NIC following a significant change in the facility's implementation strategy, as considered in the NODA. Since the Agency decided to implement a requirement for a Progress Report at the end of the second year, there is no purpose served by having a revised NIC. EPA anticipates that any significant changes to a facility's compliance plan would necessarily be reflected in the Progress Report.

C. Discussion of Public Comments and Final NIC Provisions

1. General.

The majority of commenters supported the concept of early compliance planning, particularly with regard to the public involvement component. Those advocating early involvement indicated that the PRNIC concept appears reasonable, not overly burdensome, and represents a positive step to ensure public involvement in the MACT process. Many lauded the Agency's effort to bring the spirit of the recently promulgated RCRA enhanced public participation requirements (see 69 FR 63417 (Dec. 11, 1995)) to the MACT arena and the strong RCRA goal of public participation for decisions involving permitted hazardous waste management facilities (RCRA section 7004(b)). Commenters opposing the

additional public involvement required as part of the PRNIC development process stated that the activities (e.g., the public meeting) would create more controversy and impose additional burdens on both sources and permitting agencies at a time when they will be faced with a substantial workload. Some commenters expressed concern that the additional activities would provide no real benefit, since neither the permitting agencies nor the public have authority to disapprove of a source's chosen control options, as long as the source operates within the MACT limits. One commenter noted that the concept of a PRNIC was unprecedented for CAA sources; they said a PRNIC was not required under the CAA and it was beyond EPA's authority to impose such a requirement.

The Agency agrees with commenters who recognize the value of early public involvement. EPA has repeatedly emphasized its commitment to enhancing public participation in all of its programs (see National Waste Minimization and Combustion Strategy and Enhanced Public Participation Rule). Experience has shown that hazardous waste combustors spark a tremendous amount of legitimate public interest; many communities have expressed a desire to be involved at all stages of combustor operations and permitting activities. Given this background, EPA fully expects the promulgation of the final MACT standards to receive significant and appropriate public scrutiny. As one commenter points out, HWCs are already subject to RCRA regulations, and many of them operate under risk-based permits that were subject to extensive public review. EPA anticipates that the fact that HWCs will now be regulated under CAA is likely to remain of vital interest. People will know that new emissions limits are being imposed, and will want to know how the source plans on meeting them. The NIC provides this information, and the NIC meeting opens the door for the public to communicate directly with the owners or operators.

EPA does not share the concern expressed by commenters that the public involvement activities impose a substantial burden with no commensurate benefit. The effort associated with drafting a NIC and holding the NIC meeting is not overly burdensome. Facilities will most likely need to compile the information for their own uses, in order to effectively decide which compliance option(s) they will pursue. Making the information available to the public and discussing it during an informal meeting could provide benefits in many areas, even if the permitting agency and the public do not have the authority to approve or disapprove of the compliance method(s) ultimately selected. For example, it could save time and money at the end of the permitting process. Talking to people early on about what can and cannot be accomplished in a given situation, asking their input on decisions that need to be made, and explaining the rationale behind decisions that have already been made, can lead to fewer challenges on draft permit conditions. EPA also believes the public could provide useful information to owners or operators that might contribute to a quality plan for achieving compliance with the MACT standards. The level of knowledge on environmental matters exhibited by the public (at public meetings, in correspondence, for example) appears to be increasing. As the public's knowledge base grows, so might the quality of input they can provide into technical decisions.

EPA disagrees also that there is no precedent for the concepts inherent in the NIC, and that EPA does not have authority to impose such a requirement. Since EPA has chosen to provide the maximum amount of time for compliance allowed under the CAA (3 years), requiring sources to identify their compliance plans is particularly appropriate. As stated before, EPA is committed to enhancing public involvement in environmental matters. Providing the compliance plans to the public is one of many ways the Agency is implementing this policy. Precedent for early public involvement has been set both in the Agency's Hazardous Waste Minimization and Combustion Strategy and in the enhanced RCRA public participation requirements promulgated in December, 1995 (see 69 FR 63417, December 11, 1995).

2. Purpose of the NIC

As discussed in the background part of this section, the original purpose of the PRNIC was to promote public involvement and to assist in compliance planning. Commenters supported these goals, which continue to be the compelling motives for adopting the NIC requirement. The primary purpose of the NIC is thus to serve as a planning tool for achieving compliance with the MACT standards. In other words, the NIC is designed to ensure that facility owners or operators get an early start on evaluating their options for meeting the new standards, and to serve as a vehicle for public involvement. EPA's intent is to facilitate dialogue regarding a facility's compliance strategy. The NIC also serves the purpose of having sources identify to the regulators and the public their intent to comply or not to comply with the applicable emission control requirements of this Subpart. The NIC and public meeting will foster mutual understanding of the compliance options, including consideration of both technical (e.g., equipment changes to upgrade air pollution control devices) and operational (e.g, process changes to minimize waste generation) alternatives. Ideally, it will also result in the selection of a method that will meet the goals of both the facility and the community.

The NIC will not serve as a basis for requiring facilities to cease burning hazardous waste if they intend to comply with the emission standards of this Subpart. If, however, a facility indicates in its NIC that it does not intend to meet the emission standards of this Subpart, then the source must stop burning hazardous waste within two years of the standards being promulgated. This requirement is discussed in more detail in Section D. Discussion of Public Comments and Progress Report. EPA would like to clarify that its intent has never been to shut a source down completely. The source might be required to cease burning hazardous waste; however, it would not be precluded from burning non-hazardous waste or other alternative fuels. However, those sources who indicate in the NIC their intent not to comply with the applicable emission control requirements of this Subpart will be required to stop burning hazardous waste within two years of the effective date of the emission control requirements.

Although the NIC will not be used to cause sources to stop burning, there are enforceable requirements associated with it. Sources must provide a draft NIC for public review, advertise and conduct an informal meeting, and submit a final NIC to the permitting agency. If these activities do not take place within the time frames specified in the regulations, sources will be in violation of the requirements, and subject to appropriate enforcement action. The key milestone dates contained in the schedule submitted with the NIC are not enforceable, however; the requirement to submit a schedule containing key dates is the enforceable requirement.

Finally, one commenter suggested that the NIC be used to identify RCRA permit conditions that would "disappear" when MACT limits are set. EPA is not using the NIC for this purpose. EPA will address permitting

schemes, and the process for transitioning from a RCRA permit to a Title V permit, in the final rule promulgating MACT standards for HWCs. The NIC is not the appropriate vehicle for accomplishing this task.

3. Timing

In the PRNIC discussion in the May 2, 1997 NODA, EPA said that the final PRNIC would be due to the permitting agency within 270 days following the effective date of the final MACT standards. A draft of the document would have to be available within 210 days, and at least 30 days before the informal public meeting was to be held.

Although several of commenters considered the time frame too long, many others said it would be difficult to prepare a quality compliance planning document so quickly. They also expressed concern about meeting with the public at such an early stage. The commenters' position was that any draft plan put together within 7 months after the standards are finalized would be tentative only. They were reluctant to go to the public with a tentative plan that was likely to change significantly before it was final.

EPA agrees with commenters that the time frames are tight. In order to be operating within the new limits by the end of the compliance period, it is imperative to start the planning process immediately. In recognition of commenters' concerns about preparing the draft plan, EPA is extending the time frames in the final rule. In accordance with the provisions in § 63.1211, the final NIC will be due to the permitting agency within one year of promulgation of the final standards. The NIC meeting must be held no later than 10 months following promulgation, and the draft NIC made available at least 30 days before the meeting is held. So, facilities basically have 2 extra months to prepare a draft document, and 3 extra months to submit a final NIC to the permitting agency. The revised time frames should provide sufficient time not only to prepare the initial draft, but also to revise it, as appropriate, to reflect discussions from the public meeting and final engineering decisions about the source's operation.

The Agency understands the concerns expressed by commenters about sharing draft material with the public. However, EPA does not expect, nor should facilities or the public expect, the draft NIC to describe all of the technical aspects of the compliance options in extensive detail. Similarly, discussion of the options at the public meeting should not focus on minute details. The purpose of sharing the draft and discussing the options at the public meeting is to capture major ideas in a planning document, to facilitate dialogue regarding a facility's compliance strategy, and to discuss possible courses of action. The information in the draft NIC should be sufficient to stimulate this level of discussion. The more in-depth technical discussion can be incorporated into the final document. Since all sources are required to have the final NIC submitted to the permitting agency one year after the final standards are promulgated, anyone may request a copy of it from the permitting agency at that time.

4. NIC Meeting

EPA is requiring facilities to provide notice of and host an informal meeting with the community to discuss anticipated plans for complying with the MACT emissions standards (see § 63.1211(b)). The meeting must take place within 10 months of the final standards being promulgated. At least 30 days before the meeting takes place, the facility must provide public notice of the meeting, and must make the draft NIC available for public review.

Commenters were generally supportive of EPA's intent to require a public meeting to discuss compliance planning. Some commenters had specific concerns, ranging from the timing issues addressed above, to the methods for providing notice, and the potential for being required to conduct several redundant meetings to meet various purposes.

EPA had listed three mechanisms in the NODA for providing notice of the public meeting: a display ad in a newspaper, a sign at the facility, and a broadcast announcement. These were the same mechanisms used to provide notice of the RCRA pre-application meeting, and EPA believes they are appropriate for the NIC meeting as well. At least one commenter thought the mechanisms were too broad, and that a notice via newspaper and a sign at the facility would be enough. Another commenter suggested that a notice be sent to the facility mailing list as well. EPA decided not to limit the notice methods for the NIC meeting, but did add the facility mailing list to the methods in § 63.1211(b)(3). Each of these notices must include the date, time and location of the meeting, a brief description of the purpose, a brief description of the facility, a statement asking people who need special access to notify the facility in advance, the name of a contact for the NIC, and a statement describing how the draft NIC can be obtained.

Commenters who were concerned about redundant public meetings described a few possible scenarios. For example, in states that do not adopt the streamlined RCRA modification procedures a facility might be required to conduct a public meeting as part of a Class 2 or 3 RCRA modification, as well as the NIC meeting. Federal facilities might have public meeting requirements under the National Environmental Policy Act (NEPA). Other facilities might be facing RCRA pre-application meetings, either for initial permits or those up for renewal. Or, some facilities might have routine meetings scheduled with communities as part of Responsible Care or Good Neighbor agreements.

It is not EPA's intent in imposing the NIC meeting requirement to create duplicative requirements for public meetings. To do so would burden both the facility and the public. Everyone's time is valuable, and most people would probably prefer not to go to several meetings if one will do. EPA recognizes this, and would like to clarify that nothing in today's rule precludes a facility from combining meetings as long as the purposes of each are served. EPA sees combining events, particularly public involvement activities, as a first step in moving towards a multi-media approach to environmental management. Thus, if a facility has to complete a class 2 or 3 RCRA modification because it is located in a state that has not adopted the RCRA streamlined modification process, EPA would expect, and fully encourage, the facility to set up one meeting that would serve both the RCRA requirements and the CAA NIC requirements. The same is true for combining the NIC meeting with a RCRA pre-application meeting, if the facility has to host one for either an initial RCRA permit or because its permit is up for renewal, or with other types of public meetings the facility may have scheduled.

A few commenters expressed concerns about responding to public comments on the draft NIC, either during or following the public meeting. They cited time as the driving reason for this concern; they suggested their time would be better spent finalizing their plans for complying than formally responding to comments. One commenter noted that it was unclear in the NODA whether the draft NIC would be available prior to the meeting. In response, EPA would like to clarify that facilities are not required to formally respond to any comments, oral or written. However, it is important to keep in mind that the public may request a copy of the final NIC, and will

be reviewing the facility's final plans for coming into compliance. Facilities must also submit a summary of the meeting to the permitting agency as part of the final NIC, so the permitting agency will be apprised of the discussions that took place. EPA believes that this provides incentive for the facility to address any significant issues raised by the public in the NIC meeting.

EPA expects that the exchange between the facility and the community that takes place during the meeting will be much like it is for RCRA pre-application meetings. That is, the Agency intends for the meeting to provide an open, flexible and informal occasion for the facility and the public to discuss various aspects of the facility's compliance strategy. The Agency anticipates that the facility and the public will share ideas, and build a framework for a solid working relationship. The final NIC should reflect, to the extent appropriate, ideas or suggestions raised by the public.

The final provisions in § 63.1211 clarify that the draft NIC must be made available to the public at least 30 days before the meeting is to take place. This will provide sufficient time for people to review the facility's intended strategy. EPA did not prescribe in the regulations the manner in which the draft NIC must be provided. There is not a "one-size-fits-all" approach to getting information out to the public. It is more logical to allow the facility to make that decision in the context of their particular situations. For example, if a facility has an information repository established, the draft NIC may be made available there. Or they could make it available upon request, since the name, phone number, and address of the NIC contact must be in the meeting notice.

5. Relation Between NIC and Other Notification Requirements

The requirements for the NIC are being promulgated in a new subpart applicable to HWCs in the Part 63 CAA regulations. Several commenters did not believe it necessary to add these new requirements, arguing that existing provisions under both the CAA and RCRA would fulfill the purpose of the NIC. They cited the initial notification requirements in § 63.9(b), the notifications of compliance status in § 63.9(h), Title V permit application requirements in § 70.5(c), and RCRA public involvement requirements in § 270.42 (permit modification procedures).

EPA has reviewed the requirements in each of these sections, and is not persuaded that the information or the timing of the submittals are sufficient to meet the objectives of the NIC. In terms of the information, the NIC actually seems to fall between the initial notification and the notification of compliance status. The information included in the NIC supplements the initial notification requirements in 40 CFR Part 63.9(b). The initial notification requirements in § 63.9(b) address basic information such as name and address of the owner and the source, and a brief description of the source. The focus is on the source as it exists, not as it may need to be modified to meet new standards. The information in the NIC provides this next step—it focuses on what types of changes might have to take place in order to achieve the emission limits set by MACT. The types of changes may be physical, such as adding or replacing air pollution control devices, or they may be operational, for example, achieving lower emissions by minimizing the waste generated elsewhere that is subsequently used as fuel for the combustor.

The information required in the NIC will enable the public to engage in a meaningful dialogue about the facility's compliance strategy, including a discussion of the various options under consideration. For example, when a facility identifies and describes the type of control technique(s) being considered, it would be ideal for the facility to have examined all of the waste minimization and/or pollution control options available, including emission control through process modification, feed restriction, and pollution control equipment, (e.g., Hg control by production process changes, recovery, segregation, feedrate restriction, carbon injection, carbon bed, wet scrubbing, etc.). The compliance notification requirements in § 63.9(h), on the other hand, have a different objective. They focus not on options for coming into compliance, but rather on how compliance will be demonstrated and monitored.

EPA chose not to tie the NIC requirements to the Title V permitting process. In terms of timing, the Title V process may not always be appropriate. It is important to keep in mind that MACT standards set forth in Part 63 are self-implementing; activities associated with them often take place outside of the permitting process. When MACT standards are promulgated, sources must begin adhering to the regulations, regardless of where they stand in the Title V permit process. For example, sources that already have Title V permits do not have to reopen them until renewal, if they are within 3 years of the expiration date. This time frame obviously is too long to meet the goals of the NIC. In addition, Title V permits contain all applicable requirements for all sources at a facility. To use the Title V process just for hazardous waste combustors is not practical.

The Agency has also determined that the information requirements for Title V applications do not meet the spirit of the NIC. Like the § 63.9(h) compliance notification requirements, the Title V information does not address options for achieving compliance, particularly with regard to waste minimization and pollution prevention techniques being considered. Of course, the NIC is not intended to be the primary vehicle for waste minimization or pollution prevention planning. EPA expects that these are ongoing areas of exploration for facilities. EPA does expect, however, that to the extent these may be used to achieve compliance with the MACT standards, facilities will investigate them as viable options and will discuss them as such with the public.

Some commenters suggested that facilities having to follow Class 2 or 3 RCRA permit modification procedures (e.g., because they are located in states that do not adopt the RCRA streamlined modification procedures) not be required to submit a NIC, since public meetings are a required step in those procedures. Another suggested that RCRA interim status facilities not be subject to NIC requirements, because they are not "losing" any public involvement in a modification process (since they have no permit to modify). EPA disagrees with these suggestions. The NIC is broader in scope than just facility modifications that may have to be incorporated into a RCRA permit or that may be accomplished by following the procedures in 40 CFR 270.72(a) for allowable changes under interim status. The NIC is intended to lay out for discussion the source's overall plan for achieving compliance; this goal is relevant regardless of whether the facility is operating under a permit or under interim status. Facility changes under RCRA would just be one piece of the overall document, and one segment of the public discussion. As stated in the previous section, however, there is nothing in today's rule that precludes a facility having to follow Class 2 or 3 permit modification procedures from combining the public meeting required as part of the modification process with the public meeting required as part of the NIC process. EPA would expect, and fully encourage, a facility in this situation to set up one meeting that would serve both purposes.

D. Discussion of Public Comments and Progress Report

1. Overview

The Clean Air Act requires the Administrator to establish a compliance date or dates for each category or subcategory of existing sources, which shall provide for compliance as expeditiously as practicable, but in no event later than 3 years after the effective date of such standard, except as provided via a one year extension. CAA section 112(i)(3). EPA believes that compliance as expeditiously as practicable will have numerous benefits for human health and the environment. In particular, for those sources that do not intend to ultimately come into compliance with the emission standards of this Subpart, expeditious compliance would be achieved by ceasing to burn hazardous waste. The Agency anticipates that numerous sources will choose not to come into compliance with the requirements of this rule, and will cease burning hazardous waste prior to issuance of the rule or at some later date, but prior to the compliance date. This section is intended to expeditiously limit the burning of hazardous waste by those sources who do not intend to come into compliance with the requirements of the emission standards of this Subpart, but continue to burn hazardous waste after the effective date of the emission standards of this Subpart. These sources are, quite simply, able to meet the standards earlier than the three years allowed for sources which will continue to burn hazardous waste. Thus, for this class of facilities, EPA is creating a means of compliance "as expeditiously as practicable" (CAA section 112(i)(3)).

In the April 1996 proposal, the Agency invited comment on how sources could be identified and strategies that could be used to encourage or require these types of sources to comply at the earliest possible date. Several commenters suggested methods to require sources to identify their intent to comply or not comply with the emission standards soon after the promulgation of the final rule for these standards. They also suggested that those sources that did not intend to come into compliance would be required to stop burning hazardous waste.

2. Summary of Progress Report Requirements

The Agency has adopted in the final rule a variation of the concept commenters suggested along the lines of the April 1996 concept EPA proposed. The final rule requires those sources subject to the rule to signify in their NIC an intent to comply or not to comply with the requirements of the emission standards of this Subpart. Sources who make the decision not to comply with the rule must stop burning hazardous waste on or before two years after the effective date of the emission standards of this Subpart. The Agency believes that two years is an adequate length of time for these sources to arrange for alternate management of their hazardous waste through process changes to minimize the waste, use of alternate on-site management, or the use of off-site management. Those sources who intend to come into compliance with the emission standards will have the full three years to come into compliance as intended by the statute.

The sources who do not intend to comply with this rule must include in their NIC a schedule that includes key dates for the steps to be taken to stop burning hazardous waste. Key dates include the date for submittal of RCRA closure documents. The types of closure documents that would need to be submitted will most likely vary depending on the source's status. For example, if a source is in interim status, it may need to submit a closure plan. If the source is permitted, it will probably need to update its closure plan (that is part of the permit); thus, the "document" may be a permit modification request.

a. Submittal. Commenters suggested that sources submit progress reports to track source's actions toward compliance. The Agency also believes that a progress report would be a useful tool to evaluate a source's progress toward compliance. In the final rule, EPA requires those sources to submit to the regulatory authority a progress report on or before two years after the effective date of the emission standards of this Subpart. Any sources burning waste on and/or after two years following the effective date of the emission standards of this Subpart will be required to submit a progress report.

b. Demonstration. The Agency believes that any source which intends to come into compliance with the emission standards of this Subpart, except for those sources in compliance on the effective date of the emission standards of this Subpart, will be required to make modifications to the source to come into compliance. To gauge the progress of these modifications, the final rule requires sources to submit with their progress report information demonstrating that the source has: (1) Completed engineering design for any physical modifications to the source needed to comply with the emissions standards of this Subpart; (2) Submitted applicable construction applications to the applicable regulatory authority; and (3) Entered into a binding contractual commitment to purchase, fabricate, and install any equipment, devices, and ancillary structures needed to comply with the emission requirements of this Subpart. Those sources which fail to make this demonstration in their progress report or who fail to submit a progress report shall stop burning hazardous waste on or before the date two years after the effective date of this Subpart.

Because the types of modifications that sources will have to make are anticipated to require the commitment of substantial resources, sources are required to demonstrate that they have entered into a binding contractual commitment to purchase the resources necessary to make those modifications. Some examples of binding contractual commitments follow; however, EPA may judge other demonstrations adequate on a case-by-case basis. In some cases, EPA will allow evidence of an in-house construction plan to satisfy the demonstration. If on-site labor by facility personnel will be used, a statement of commitment must be provided by upper management, and such other evidence of a commitment as is available, such as company memoranda or annual budgets committing funds, purchase orders, or copies of contracts with any suppliers of equipment or materials. EPA expects that, in most cases, sources will use off-site resources in their modifications. To demonstrate commitment in these cases, sources must provide copies of binding contracts with companies to perform tasks or supply equipment that will facilitate bringing the source into compliance.

There may be a limited number of sources who intend to come into compliance, but will not need to undertake any of the activities identified in the demonstration criteria above to do so. These sources are required to submit instead documentation: (1) Demonstrating that the source, at the time of the progress report, is in compliance with the emissions requirements; or (2) specifying the steps that will be taken to bring the source into compliance, without undertaking any of the activities identified in the demonstration criteria. The Agency anticipates that few if any sources will not need to enter into binding contracts in order to come into compliance with the emission standards of this Subpart.

Those sources who indicated in the NIC their intent not to comply with the

emission control requirements of this Subpart must still submit a progress report. These sources, however, must only indicate that they have stopped burning hazardous waste and have submitted the required RCRA closure documents.

c. Schedule. To determine that facilities are undertaking the steps necessary to come into compliance by the compliance date, the progress report shall contain a schedule. This schedule must take into account the key dates listed in 63.1211(a)(1)(ii) for projects that will bring the source into compliance with the emission standards. The schedule must cover the time frame from the submittal of the progress report through the compliance date of the emission standards. EPA is requiring that the following key dates, as applicable to each source, be contained in their schedule: (1) Bid and award dates for construction contracts and equipment supply contractors; (2) milestones such as ground breaking, completion of drawings and specifications, equipment deliveries, intermediate construction completions, and testing; (3) the dates on which applications were submitted for or obtained operating and construction permits or licenses; (4) the dates by which approvals of any permits or licenses applied for are anticipated; and (5) the projected date by which the source will be in compliance with emission standards. The Agency anticipates that many sources will be able to update the schedule included with their NIC in submitting a schedule for the progress report.

d. Sources That Do Not Intend To Comply. The Agency anticipates that some facilities, which intended to comply at the time of their NIC submittal, may make the determination not to comply based on engineering studies or evaluations by the time of their progress report submittal. Those sources that signify in their progress report, submitted on or any time before two years after the effective date of the emission standards of this Subpart, their intention not to comply with the requirements of this Subpart must stop burning hazardous waste on or before the date two years after the effective date of the emissions standards of this Subpart. Sources who, at the time of their NIC submittal, have any belief or concern that they may decide not to comply with the emission standards should consider planning alternate waste management alternatives well in advance of the two year stop burning deadline.

e. Facilities with Multiple Sources. Commenters stated that some facilities may have multiple units at the same site subject to the MACT requirements. These facilities may decide to bring a portion of the sources into compliance and cease burning hazardous waste in the other portion of their sources. If a facility did decide to upgrade one or more units, it may be necessary to utilize the remaining unit, in which it intended to stop burning hazardous waste prior to the compliance date, to handle the capacity of the unit being upgraded until the installation of controls was complete. The commenters believed that it was unjustified to close a source at the two year deadline in the case where a source: (1) Was designated for closure at or before the three year compliance date; and (2) was handling the waste from another on-site source being upgraded to comply with the MACT standards or in order to install source reduction modifications eliminating the need for further combustion of wastes.

The Agency agrees that the intent of the requirement for sources that did not intend to comply to stop burning hazardous waste should not apply to these types of sources. Therefore, the requirement to stop burning hazardous waste at the two year deadline does not apply to a source if: (1) The source was designated in the NIC as a source that would stop burning hazardous waste on or before the compliance date; and (2) the source was shown in the NIC to be necessary to handle the capacity of another on-site source while that source was unable to handle the waste and undergoing modifications to come into compliance with the emission standards of this Subpart or in order to install source reduction modifications eliminating the need for further combustion of wastes.

E. Certification

To ensure that information submitted by a source is true and accurate, all NIC and progress reports submitted shall contain the following certification signed and dated by an authorized representative of the source: "I certify under penalty of law that I have personally examined and am familiar with the information submitted in this document and all attachments and that, based on my inquiry of those individuals immediately responsible for obtaining the information, I believe that the information is true, accurate, and complete. I am aware that there are significant penalties for submitting false information, including the possibility of fine and imprisonment."

An authorized representative should be a responsible corporate officer (for a corporation), a general partner (for a partnership), the proprietor (of a sole proprietorship), or a principal executive officer or ranking elected official (for a municipality, State, Federal, or other public agency).

F. Extension of the Compliance Date

The CAA provides sources that intend to come into compliance, but because of the need to install controls will not meet the compliance date, the ability to request an extension of the compliance date for one year. The Agency believes facilities that choose to install process changes (which are essentially pollution prevention or waste minimization measures) and/or other controls that are appropriate for meeting MACT standards are eligible to request a one year extension of the compliance date to install these controls (CAA Section 112(i)(3)(B)). Facilities that request an extension to install pollution prevention and/or waste minimization measures may use part 63.1216 below, which describes the pollution prevention related information to be submitted. Facilities that request an extension for installing only end-of-pipe emission controls may use part 63.6(i)(4) requirements. In either case, the extension request shall be filed at least one year prior to the compliance date of this Subpart.

G. Sources Which Become Affected Sources After the Effective Date of This Subpart

The Agency is concerned that there may be sources who become subject to the emission standards of this Subpart after the effective date of the emission standards of this Subpart. The following is intended to clarify the requirements and time frames that must be met by such sources. A source which begins to burn hazardous waste after the effective date of the emission standards of this Subpart, therefore becoming an affected source, but prior to 9 months after the effective date of the emission standards of this Subpart, shall comply with all the requirements of this section and associated time frames for public meetings and document submittals.

A source which intends to begin burning hazardous waste after 9 months after the effective date of the emission standards of this Subpart, therefore becoming an affected source, shall meet all the requirements concerning the NIC and progress report prior to burning hazardous waste. Such sources shall make a draft NIC available, notice their public meeting, hold their public meeting, and submit a final NIC prior to burning hazardous waste. Such sources also shall submit their progress report at

the time of the submittal of their final NIC.

VI. Waste Minimization and Pollution Prevention

A. Overview

Pollution prevention is widely recognized as the most preferable form of environmental management. Indeed, the Clean Air Act, the Pollution Prevention Act, and the Resource Conservation and Recovery Act explicitly make pollution prevention the preferred tool in our nation's environmental management toolbox. The States have been strong leaders as well in moving pollution prevention to the forefront. Over the past decade, 30 states have passed legislation that promotes pollution prevention.[18] Those States have embarked on a variety of programs that move pollution prevention more into the mainstream of their environmental management strategies—ranging from pollution prevention based permits and inspections, to mandatory pollution prevention planning programs, to voluntary partnerships and technical assistance. Nearly every State operates some form of pollution prevention technical assistance program to help companies reduce as much waste as possible at the source.

EPA has embarked on several experimental programs, including, for example, Project XL and the Common Sense Initiative, to identify barriers in Federal regulations that impede cleaner, cheaper, smarter environmental solutions, and to demonstrate ways of redrafting regulations to provide greater flexibility in solving environmental problems.

In 1994, EPA began an extensive outreach effort to begin identifying pollution prevention barriers and incentives affecting hazardous waste combustion. Over the course of the past four years, EPA has worked extensively with the States, industry, environmental groups, and citizens, in many dozens of discussions and correspondences to explore a broad range of approaches to pollution prevention in the combustion arena. Today's rulemaking puts in place several incentive based pollution prevention and waste minimization incentives that derive from that long term effort, and that will provide the regulated community with additional flexibility to use pollution prevention technologies where it makes sense to do so. Some barriers were identified that are not easily solvable within the limits of the Clean Air Act, such as time limits on compliance that sometimes force companies to install end-of-pipe emission controls, instead of pollution prevention process changes, because they are faster and less risky to install. Nevertheless, today's rule suggests an approach that can address even this problem.

Today's rule contains incentives that provides the regulated community:

—several months of planning time before the MACT compliance period begins to explore cost effective pollution prevention alternatives that might reduce the cost of hazardous waste combustion,

—the opportunity to extend the compliance period by one year where the additional time is needed to install pollution prevention controls that reduce the amount of hazardous waste entering combustion units, and

—the opportunity to engender public support on pollution prevention alternatives that reduce the amount of waste that will be combusted.

The six pollution prevention alternatives EPA published for comment, the comments received and a description of the incentives contained in today's rule are discussed further below.

B. Background

The goals of the Clean Air Act clearly express Congress' intent to use pollution prevention as a fundamental tool for protecting our nation's air resources:

"A primary goal of this chapter is to encourage or otherwise promote reasonable Federal, State, and local government actions, consistent with the provisions of this chapter, for pollution prevention." (Clean Air Act, Section 101 (c))."

"Air pollution prevention (that is, the reduction or elimination , through any measures, of the amount of pollutants produced or created at the source) * * * is the primary responsibility of States and local governments." (Clean Air Act, Section 101 (a)(3))."

Congress' intent in the CAA is consistent, if not identical, to the policies set in the Pollution Prevention Act of 1990 (PPA) and the Hazardous and Solid Waste Amendments to RCRA of 1984, RCRA Section 1003(b) and Section 6602 (a).

More specifically, we note the definition of pollution prevention as used in the CAA is best captured in the operational definition used in Section 112 (d)(2). This section requires EPA to consider pollution prevention techniques in addition to "end of pipe" emission controls and other methods in the setting of MACT standards. Pollution prevention is used here to include: "measures, processes, methods, systems, or techniques including, but not limited to, measures which * * * (A) reduce the volume of, or eliminate emissions of, such pollutants through process changes, substitutions of materials or other modifications, * * * or (D) are design, equipment, work practice, or operational standards (including requirements for operator training or certification) * * *"

To avoid some of the historical confusion that has occurred over the definitions of pollution prevention and waste minimization, it is useful to compare the CAA definition to those in the PPA and in the Hazardous and Solid Waste Amendments to RCRA of 1984.

The PPA (at Section 6603(5)(A)) defines pollution prevention as source reduction activities, which includes any practice that reduces the amount of hazardous substance, pollutant or contaminant entering a waste stream, or otherwise prior to recycling, treatment or disposal. It includes such activities as: equipment or technology modifications, reformulation or redesign of products, substitution of raw materials, improvements in work practices, maintenance, training, and inventory control. The meaning contained in the PPA is essentially the same meaning referred to in Section 112(d)(2) of the CAA. Both focus on reducing waste generation at the source by making changes in the way things are manufactured.

The PPA excludes from pollution prevention any practice which "alters the physical, chemical, or biological characteristics or the volume of a hazardous substance, pollutant, or contaminant through a process or activity which itself is not integral to and necessary for the production of a product or the providing of a service." (Section 6603(5)(B). In essence, this definition excludes waste management, recycling (except for closed loop recycling that is integrated into production processes), burning for energy recovery, waste treatment, and disposal.

Since many of the facilities affected by today's rulemaking are simultaneously regulated by RCRA, it is important to also explain the use of the term waste minimization, under RCRA.

Waste minimization includes pollution prevention (or source reduction) and environmentally sound recycling, i.e., recycling that does not constitute disposal (see 40 CFR 261.1(c)). It does not include treatment—i.e, any "method, technique, or process, including neutralization,

[18] *Pollution Prevention 1997, A National Progress Report* (June, 1997). U.S. Environmental Protection Agency. EPA 742-R-97-00, Washington, D.C.

designed to change the physical, chemical or biological character or composition of any hazardous waste so as to neutralize such waste, or so as to recover energy or material resources from the waste, or so as to render such waste non-hazardous, or less hazardous; safer to transport, store or dispose of; or amenable for recovery, amenable for storage, or reduced in volume." (40 CFR 260.10). RCRA also contains requirements for hazardous waste generators and permitted waste management facilities to make routine certifications that they have a "waste minimization program in place," and large generators must also report waste minimization activities biennially.

The environmental literature and public statements of many companies provide strong evidence of the potential benefits to industry and the environment that result from using pollution prevention over waste generation and management. For example, pollution prevention techniques can help companies reduce the amount of raw materials purchased and the amount of waste generated. These reductions can reduce the amount spent on waste management and can also reduce worker exposure to hazardous substances. Pollution prevention can help companies improve product yield and find ways to recover materials that might otherwise be destroyed or landfilled.

The literature also points to barriers that may impede a company's ability to pursue pollution prevention. Barriers may include, for example: little or no access to technical information on pollution prevention technologies, concern over the impact of process changes on product quality, a lack of access to capital, requirements in existing environmental regulations that conflict with pollution prevention objectives.

Today's regulation focuses on reducing several potential regulatory barriers that could interfere with pollution prevention solutions. The incentive based approach contained in today's rule is explained further below.

C. Summary of Proposed Pollution Prevention/Waste Minimization Incentives and Comments Received

EPA requested comment on six alternatives for promoting pollution prevention and waste minimization at hazardous waste incinerators, cement kilns and LWAKs. Three were proposed in the Agency's April 1996 NPRM and three were proposed in the Agency's Notice of Data Availability (NODA) published in the **Federal Register** on May 2, 1997 (Revised Technical Standards for Hazardous Waste Combustion Facilities; Proposed Rule, 62 FR 24241). All six incentive based alternatives were designed to promote the identification and installation of pollution prevention and waste minimization techniques that reduce or eliminate the amount and/or toxicity of hazardous wastes entering combustion feedstreams, either as an alternative to end-of-pipe combustion measures, or in combination with combustion measures, to meet MACT standards.

Two of the six alternatives proposed focused on using waste minimization facility planning as a tool that would cause regulated facilities to identify pollution prevention/waste minimization measures that could be used to reduce the amount and/or the toxicity of hazardous wastes entering combustion feedstreams. Two additional alternatives focused on extending compliance deadlines to allow additional time for companies to fully explore pollution prevention/waste minimization measures and combustion measures that may be necessary to meet MACT standards. A fifth alternative requested comment on an approach that would harness the power of public involvement during the initial stage of corporate compliance planning. The sixth alternative proposed promulgating pollution prevention and waste minimization incentives several months before the MACT standards are promulgated—which would provide companies several months of advance planning time before the MACT compliance period begins. The alternatives were not designed to be exclusive. Today's rule promulgates a combination of three of these options, encourages States to adopt two others, and recommends an alternative voluntary approach for the sixth. The options, comments received and EPA's response to major comments are discussed below. EPA's response to each comment is contained in the docket.

EPA received over 40 comments on the options contained in the April 1996 NPRM and the NODA. Most of the commenters addressed one or more of the following topics:

—Time-based incentives, including the opportunity to enter into enforcement agreements beyond four years,
—The effectiveness of pollution prevention planning and planning criteria,
—Perceived effectiveness of pollution prevention in the context of this rulemaking,
—Setting MACT standards based on pollution prevention/waste minimization,
—Public review of pollution prevention and waste minimization,
—The role of pollution prevention and waste minimization in waste management,
—The definition of pollution prevention and waste minimization, and
—Applicability of pollution prevention incentives to commercial facilities.

EPA asked for comments on the appropriateness of two options requiring pollution prevention/waste minimization facility planning. One option would require facilities to complete a waste minimization facility plan that identifies alternatives for reducing the amount of hazardous waste managed by combustion. While this approach would not require facilities to select any particular pollution prevention technology, it presumes that going through the process of exploring alternatives would cause a company to consider more pollution prevention options than they would have otherwise and select any that are cost-effective.

In the second waste minimization planning option, EPA proposed to allow States and EPA Regions (in cases where States are do not have an approved CAA Title V program) to require pollution prevention planning on a case-by-case basis. Determining which facilities should be required to complete a pollution prevention/waste minimization facility plan could take into account several factors, including, for example, whether an existing state program had already accomplished this objective, the extent to which this requirement may be too burdensome for some states, and the extent to which facility specific conditions indicate emissions could be controlled by feed stream management and waste minimization at the source.

A variety of commenters addressed this issue. Four states and one state association commented pollution prevention/waste minimization should be the highest priority waste management approach, though they had diverse and sometimes conflicting opinions about the specific options proposed. One State commented that mandatory planning should be required for all facilities that generate and combust waste on-site, and that planning should be required on a case-by-case basis for commercial off-site combustion facilities. One State and the State association stated that the mandatory planning requirement should be expanded to include all facilities that generate waste managed by combustion. A fourth State said that no waste minimization incentives should be included in this rule because the

regulated community has had many years to reduce waste generation through pollution prevention/ waste minimization, and should have already considered waste minimization as an approach to compliance. One state did not comment specifically on the pollution prevention planning options but was in favor of encouraging pollution prevention incentives in this rule.

This diversity of opinion among States leads EPA to believe that the pollution prevention/waste minimization incentives contained in this rule must allow broad flexibility for State programs. EPA is also aware, from discussions outside the context of this rulemaking, that some states are specifically opposed to mandatory pollution prevention requirements, and a few states have not yet established pollution prevention programs.

Several dozen comments were received from industry. Most of the comments from companies who generate and combust waste on-site were in favor of pollution prevention/ waste minimization as the most desirable form of waste management. However, most were opposed or silent regarding required pollution prevention planning. Only one argued that mandatory pollution prevention planning is not appropriate, and that the case by case option provides greater flexibility and is therefore more appropriate.

Commercial combustion facilities generally oppose pollution prevention planning requirements because they have virtually no control over what types or how much waste their customers generate for combustion. However, one company argued strongly for the Agency to require mandatory pollution prevention planning by all regulated units to identify pollution prevention alternatives that eliminate or reduce the amount and toxicity of combusted wastes. The commenter further argued that pollution prevention should be used to leverage the closing of combustion units where wastes could more effectively be eliminated or reduced. Another commercial company believes EPA should implement "good actor" incentives for companies that educate their customers regarding available waste minimization resources. Such incentives could include reduced inspection frequencies, reduced performance testing, and a recognition program. This approach was not suggested by any other commenters. EPA believes this approach might be appropriate for further exploration at a later time. One Federal agency commented in favor of a case-by-case approach.

EPA considered several factors regarding this approach. First, the CAA clearly envisions States as the primary implementers of the Title V program, and the pollution prevention programs operated by the States are clearly diverse. While 15 States have enacted mandatory pollution prevention planning programs, the remaining States continue to emphasize voluntary pollution prevention programs and technical assistance to encourage pollution prevention.

Available data shows that mandatory pollution prevention planning can be an effective State tool. It is not clear how effective this approach would be for a broad array of states. In a review of seven states that have chosen to implement mandatory pollution prevention planning programs, the National Pollution Roundtable concludes that mandatory pollution prevention planning produces beneficial results for the regulated community and the environment, and encourages other states to consider this direction.[19] However, New Jersey (one of the seven States reviewed) notes in a separate report that its companies began making significant reductions through pollution prevention well before the State passed legislation requiring mandatory pollution prevention planning. In this case, the State is not able to pinpoint why this occurred.[20]

Of the 21 commercial hazardous waste incinerators and the 141 on-site hazardous waste incinerators (i.e., incinerators co-located with a company manufacturing facilities), 58 percent are located in states which have legislated pollution prevention programs already in place. Nearly all of the remaining facilities are located in States that provide pollution prevention technical assistance. In addition, all of these facilities are co-regulated by RCRA and have been required since 1984 to certify on an annual basis, that they have a waste minimization program in place. Therefore, it is not clear what additional pollution prevention benefits would result from a mandatory requirement. Based on its analysis, EPA believes that a federal requirement for pollution prevention planning is not appropriate.

EPA also considered the impact Federal pollution prevention planning requirements would have on the Agency's paperwork reduction commitments. EPA is committed to decreasing its information collection request budget. In light of the baseline requirements and voluntary programs States have already established in this area, EPA concludes this requirement would increase federal paperwork without necessarily creating a commensurate improvement in environmental quality.

EPA has also expanded the availability of voluntary pollution prevention incentives available—which in turn reduce the need for mandatory federal pollution prevention requirements. For example, EPA has recently released the "Waste Minimization Prioritization Tool."[21] This tool is an easy-to-use computer program that allows industrial, government and public users to quickly identify their highest hazard wastes as targets for pollution prevention efforts. The tool allows the user to enter information on particular waste streams and develop a screening-level assessment of chemicals based on their persistence, bioaccumulation potential, and human and ecological toxicity. The system ranks about 900 chemicals that have "complete" data on chemical persistence, bioaccumulation potential, and human and ecological toxicity, and it includes partial data for 3,800 others. This tool has received much review and is targeted for widespread distribution in the regulated community.

EPA continues to provide $5–$8 million dollars per year in grant funds to States that develop innovative pollution prevention approaches, and EPA is promoting pollution prevention innovation in States through the National Environmental Performance Partnership System (NEPPS). NEPPS agreements give the States flexibility to combine individual program grants to maximize achieve environmental goals, including using funds for pollution prevention that have historically been used for end-of-pipe pollution controls. Texas, New Jersey, and Ohio (which oversee a total of 45 hazardous waste incinerators) are among the states that signed NEPPS agreements in 1996. Thirty states were scheduled to negotiate NEPPS agreements in 1997.

In addition, a variety of government-industry partnerships are producing pollution prevention results. For example, 163 industry members of Texas' Clean Industries 2000 program

[19] "Facility Pollution Prevention Planning Requirements: An Overview of State Program Evaluations." National Pollution Prevention Round table (August 8, 1997), Washington, D.C. 20036.

[20] Aucott, M., Wachspress, D., & Herb J., (May, 1996). "Industrial Pollution Prevention in New Jersey," New Jersey Department of Environmental Protection, Trenton, N.J.

[21] "Waste Minimization Prioritization Tool, Version 1.0: User's Guide and System Documentation," (EPA 530-R-97-019, June, 1997). U.S. Environmental Protection Agency, Washington, D.C.

are committed to reducing emissions of Toxic Release Inventory (TRI) chemicals by 50 percent by the year 2000. A twenty-nine percent reduction was reached by the year 1994.

Balancing all of the above factors, EPA believes mandatory and case-by-case pollution prevention planning approaches are not necessary to achieve the pollution prevention goals of the CAA. A combination of strong incentives and broad flexibility for States and the regulated community, including some of the options discussed below and contained in today's rule, will accomplish the pollution prevention goals of the CAA.

Two options were proposed that would allow the MACT compliance period to be extended for facilities that demonstrate the need for extra time to install pollution prevention measures. One of these options would allow facilities to apply for a one-year compliance extension to the MACT compliance period under Section 112(i)(3)(B) where additional time is needed to install pollution prevention or waste minimization measures that reduce or eliminate hazardous wastes entering the combustion feedstreams of regulated facilities. Of course, such applications must still be evaluated on a case-by-case basis CAA 112(b)(3). However, the following discussion provides an indication of how EPA might evaluate such applications based on pollution prevention.

Facilities that apply for this one-year extension would be required to provide a description of the pollution prevention/waste minimization measures that would significantly reduce or eliminate the volume and/or toxicity of hazardous wastes entering combustion feedstreams, a reduction goal (i.e., how much waste will no longer enter combustion feedstreams of the regulated unit(s)), a discussion of additional combustion or other treatment technology that will be installed to meet MACT standards, and a schedule of milestones necessary to achieve compliance. The pollution prevention/waste minimization measures installed could be used either alone to meet MACT standards (e.g., in cases where elimination of certain combusted waste streams will either achieve MACT standards for the regulated unit(s), or will eliminate the need for the regulated unit(s)), or in combination with combustion or other treatment technologies that enable the facility to comply with MACT standards. We emphasize that identifying expected reductions in combustion feedstreams is required, but identifying reductions in emissions as a result of installing pollution prevention measures is not required. EPA recognizes this would not be practical. The compliance date for facilities that are granted a one year extension by the permitting agency would be four years after the promulgation of MACT standards, rather than three years after the date of promulgation.

EPA recognized in its proposal that States operate very diverse pollution prevention programs. However, to ensure some degree of consistency in granting one year extensions, EPA proposed four flexible factors to be considered in approving or denying requests for one-year compliance extensions for hazardous waste burning incinerators, LWAKs, and cement kilns. These factors included: (1) The extent to which the process changes (including waste minimization measures) proposed as a basis for the extension reduce or eliminate hazardous wastes entering combustion feed streams and are technologically and economically feasible, (2) whether the magnitude of the reductions in hazardous wastes entering combustion feed streams through process changes are significant enough to warrant granting an extension, (3) a clear demonstration that reductions of hazardous wastes entering combustion feed streams are not shifted as increases in pollutants emitted through other regulated media, and (4) a demonstration that the design and installation of process changes, which include waste minimization measures, and other measures that are necessary for compliance cannot otherwise be installed within the three year compliance period.

EPA received no adverse comments on the four factors for ensuring consistency. Companies that operate on-site units (many of which are large chemical plants which operate complex production processes and which generate diverse and complex waste streams) commented that they prefer to use pollution prevention and waste minimization measures wherever they are cost effective. However, in the instant rulemaking, the dual tasks of designing, testing and installing pollution prevention process changes and combustion or other treatment equipment is not practical in a three year compliance period plus a one-year extension. Some commented that meeting the compliance date may often force companies to install combustion controls at great expense and forego exploration of pollution prevention options.

The four states and one State association that commented on the compliance extension options had diverse opinions. Two states commented that pollution prevention/waste minimization should be encouraged in this rulemaking. However, they believe three years plus a one-year extension may not be enough time for companies to identify and install waste minimization measures. A third State said that pollution prevention/waste minimization incentives should not be included in this rule because companies have had more than ample time to pursue pollution prevention/waste minimization as an approach to compliance. A fourth State and State association commented that facilities have had ample time to identify and install pollution prevention solutions—however, one year compliance extensions should be considered in cases where it will promote further pollution prevention.

Two commercial hazardous waste treatment organizations commented that a one-year extension for pollution prevention/waste minimization purposes is not appropriate since the companies generating the waste have had several years to consider pollution prevention and waste minimization measures as a waste management alternative.

EPA believes that compliance extensions provide a strong incentive for pollution prevention, and provide States additional flexibility. EPA agrees that, in some cases, three years plus a one-year extension may not be sufficient time to identify and install waste minimization measures that achieve compliance. However, the one year extension is the maximum allowable under the CAA. EPA disagrees with the commenters opposing the extension because pollution prevention and waste minimization should be viewed as an on-going process that adopts new pollution prevention technologies as they become available. In some cases, the economics of complying with new MACT standards may make pollution prevention more cost-effective than it would have otherwise been.

In today's rule, EPA has chosen to implement the one-year compliance extension approach. In evaluating extension requests, EPA urges permitting agencies to give first preference to facilities that request the extra time to install pollution prevention measures (either alone or in addition to combustion controls) over facilities that request an extension only for installing combustion controls. EPA has also simplified the factors that must be considered by permitting agencies in making determinations for one year extensions by making them identical to

the factors facilities must include in requests for extensions.

In its 1997 NODA, EPA encouraged facilities that wish to apply for a one-year extension to coordinate the development the application for extension with the information contained in Notice of Intent to Comply (NIC), which is also described in today's rulemaking. Based on the comments received from industry and States noting the need for extra time to consider and then install pollution prevention measures, EPA would expect to see a reasonable degree of consistency between pollution prevention alternatives discussed in the NIC and pollution prevention technologies identified in a subsequent request for a one year extension to install pollution prevention technologies. Requests for a one-year compliance extension from facilities who did not address pollution prevention in the NIC should be viewed with caution to guard against last minute attempts to delay compliance.

The second compliance extension option, proposed in the 1997 NODA, would allow certain facilities to enter into a written consent agreement or consent order in cases where pollution prevention/waste minimization technologies would significantly reduce wastes entering combustion feed streams, but would take more than four years (i.e., three years plus a one-year extension). EPA could use this alternative using the principles articulated in the Agency's "Policy on Encouraging Self-Policing and Voluntary Correction" (also known as the "Audit Policy" 60 FR 66706, December 22, 1995).

Very few commenters addressed this option. Some industry commenters expressed limited interest in this approach, since entering into a consent agreement would provide no shield against citizen suits.

EPA agrees that longer than four years may be needed in some cases. However, based on the comments received and after further evaluation, the Agency has decided not to pursue this proposal as part of this rulemaking. Instead, EPA believes its Project XL program provides a better opportunity for EPA to work with companies who are interested in undertaking projects which hold the promise of superior environmental results in exchange for regulatory flexibility. The XL program is also designed to include public involvement early in the process, which would hopefully reduce the likelihood of citizen suits. Project XL proposals should be developed and submitted well in advance of the deadline for meeting this MACT standard, possibly before the promulgation of MACT standards. See the May 22, 1995 **Federal Register** Notice [FRL-5197-9] for further information on developing and submitting a proposal.

EPA proposed a fifth pollution prevention/waste minimization incentive in the 1997 NODA which focused on harnessing the power of public involvement to encourage companies to consider pollution prevention alternatives. The NODA proposed to require facilities to make public, within ten months after promulgation of the MACT standards, a draft Notice of Intent to Comply (NIC) that contains a description of technologies that will be used to achieve compliance with MACT standards, including pollution prevention and waste minimization technologies. Regulated facilities would also be required to hold a public meeting on its compliance plan and to submit a final NIC to the permitting agency no later than one year after the promulgation of standards. In this setting, the public would be able to review a company's draft compliance plan and make known its concerns and views regarding the use of pollution prevention, combustion or other treatment methods.

Several commenters responded to the pollution prevention/waste minimization components of the NIC proposal. One industry trade organization commented that the NIC requirements are unnecessary since its members already participate in a responsible care program that includes pollution prevention and community involvement. Another commenter argued strongly that the public involvement opportunity provided by the NIC process is inadequate, and that the point at which the public interacts with the facility is too late to influence decisions to encourage the installation of pollution prevention technology that may reduce or eliminate the need for combustion.

It is crucial to provide the public with information and a public meeting on the pollution prevention/waste minimization and combustion measures that are planned at individual facilities. The NIC process occurs early enough in the compliance process to provide meaningful public involvement, and the NIC process provides a strong lever for citizens to voice their opinions. The pollution prevention aspects of the NIC requirements are further discussed in the NIC portion of today's preamble.

The sixth pollution prevention/waste minimization option proposed involved promulgating a "fast track" rule in advance of MACT standards to provide the regulated community time to explore, plan and possibly begin implementation of pollution prevention and waste minimization measures several months before the promulgation of MACT standards.

One commenter strongly urged this option because it provides facilities with additional planning time to identify pollution prevention options before the MACT compliance period begins. Although no other commenters specifically addressed this option, EPA believes it provides States additional flexibility, and comports with the variety of comments that expressed general support for pollution prevention as a top priority environmental management strategy.

D. Waste Minimization Incentives Contained in Today's Rule

Today's rulemaking provides three incentives to encourage the use of pollution prevention measures to reduce or amount and/or toxicity of hazardous wastes entering combustion feedstreams. Wastes that cannot be reduced at the source should be recycled in an environmentally sound manner, i.e., in a manner that does not constitute disposal. Wastes that cannot be reduced at the source or recycled should be either burned for energy recovery, treated, or disposed in accordance with environmental standards. Today's incentive based approach encourages and rewards facilities that significantly reduce the amount of combusted hazardous waste using pollution prevention measures as a method for achieving MACT standards, and it provides the flexibility needed by the States to build on or expand existing pollution prevention programs.

Today's rule (at Section 63.1216) allows owners/operators of hazardous waste burning incinerators, cement kilns and lightweight aggregate kilns to request a one-year extension to the MACT compliance period in cases where additional time is needed to install pollution prevention and waste minimization measures that reduce the amount of hazardous waste entering combustion feedstreams. The Administrator or State with an approved Title V program is authorized to grant one-year extensions for this purpose under Section 112(i)(3)(B) of the CAA. Pollution prevention and waste minimization measures that can be considered in this determination include: process changes (including closed loop recycling), raw material substitutions, design changes, equipment changes, work practice changes, changes in operational standards or other similar measures that

EPA or State permitting agencies may determine is pollution prevention or waste minimization. Waste minimization activities that may be considered for an extension include pollution prevention activities and recycling measures, as defined in 40 CFR 261.1(c) and conducted in accordance with RCRA regulations.

The term recycling, as defined in defined in 40 CFR 260.10 does not include burning for energy recovery or treatment activities. Therefore, burning for energy recovery will not be considered for an extension. Companies who burn for energy recovery are presumed, in accordance with their RCRA waste minimization program in place certification (discussed above), to have determined that wastes burned for energy recovery could not be economically source reduced or recycled prior to burning. EPA believes this approach is completely consistent with past Agency policy and provides the regulated community with greater flexibility in managing its non-product outputs.

Requests for a one-year extension must reasonably document that the waste minimization measures, and whatever additional compliance measures are necessary to achieve compliance, could not otherwise be installed in time to meet the three-year compliance period. Stronger consideration should be given to requests that contain, for example: (1) A schedule to redesign a production process that eliminates the use of solvents and the generation of spent solvents (which are currently combusted in an on-site hazardous waste incinerator), (2) a commitment to reduce by 25% the amount of hazardous wastes entering the incinerator feedstream (as a result of the waste minimization process change), (3) a description and schedule for designing and installing combustion controls to treat remaining wastes, and (4) evidence that the extension reflects the reality that the design specs and schedule for the remaining combustion controls can not be completed or installed without first having information on waste minimization related feedstream changes. In contrast, requests that propose to simply send wastes off-site for recycling, for example, without first exploring on-site process changes or operating practices, should receive little or no consideration for an extension because there is nothing in this action that would require extensive time.

Decisions to grant one-year extensions will be made by EPA or state programs that have delegated the authority to implement and enforce the emission standard for that source. In light of the wide range of approaches States employ regarding waste minimization planning, it is appropriate to encourage some degree of consistency in how these decisions are made, without superseding State approaches. Therefore, EPA is requiring that permitting agencies must consider all of the information required in Section 63.1216 in approving or denying requests for one-year compliance extensions for hazardous waste burning incinerators, LWAKs, and cement kilns. EPA will also work with States to develop separate guidance, with examples, of how to review requests for an extension, based on pollution prevention/waste minimization efforts.

The second pollution prevention/waste minimization incentive promulgated in today's rule is the requirement for regulated facilities to include in their Notice of Intent to Comply (NIC) a description of pollution prevention and waste minimization activities proposed to reduce the amount and/or toxicity of hazardous waste entering the facility's combustion feedstream(s). This approach will harness the power of public involvement, through the NIC review and public meeting process, to encourage facilities to consider pollution prevention measures in their MACT compliance plan. The requirements for the NIC process are described in today's preamble.

It is important to note here that companies should consider coordinating the development of a NIC process with any subsequent requests for a one year extension. For example, it would seem logical that pollution prevention measures identified in the NIC (prepared in the first year of the compliance period), would also appear in a subsequent request for a one year extension (prepared in the second year of the compliance period). In contrast, requests for a one year extension from companies that did not consider pollution prevention in their NIC might be looked at with more caution.

As a third pollution prevention incentive, EPA is promulgating today's rule several months in advance of promulgating MACT standards to provide companies with several valuable months of advance planning time to identify waste minimization measures can be used to meet, or assist in meeting MACT standards. The timing of today's rule, therefore, serves as a valuable pollution prevention incentive.

Taken together, the tailored incentives contained in today's rule provide strong encouragement for regulated companies to pursue cost effective pollution prevention and waste minimization measures in their individual approaches to meeting MACT standards.

As a final note, a substantial amount of free technical information, assistance and guidance on pollution prevention and waste minimization is available from the Federal government and States, and from a variety of private sources. EPA's "Pollution Prevention Facility Planning Guide" (May, 1992; NTIS # PB92-213206) describes the series of analytical steps that are often used by companies to identify waste minimization measures. Additional EPA references include: "Waste Minimization Opportunity Assessment Manual (EPA 625/7-88/003, July 1988), Interim Final "Guidance to Hazardous Waste Generators on the Elements of a Waste Minimization Program In Place,"(May 1993), "An Introduction to Environmental Accounting As a Business Management Tool" (EPA 742-R-95-001, June 1995), the "P2/Finance User's Manual: Pollution Prevention Financial Analysis and Cost Evaluation System for Lotus 1-2-3 (EPA 742-B-94-003, January 1994), and Enviro$ense, an electronic library of information on pollution prevention, technical assistance, and environmental compliance. Many of these and other documents can be accessed by contacting the RCRA Hotline toll-free at 1-800-424-9346. Enviro$ense can be accessed by contacting a system operator at (703) 908-2007, or on the Internet at http://wastenot.inel.gov/enviro-sense. Information on State waste minimization programs can be obtained through Enviro$ense, directly from the State pollution prevention program offices, or from the National Pollution Prevention Roundtable at E-mail address 75152.1416@compuserve.com, by phone at 202-466-7272 in Washington, D.C.

VII. State Authority

A. RCRA State Authorization

Under RCRA section 3006, EPA may authorize a State to administer and enforce the RCRA hazardous waste program. See 40 CFR part 271. After receiving authorization, the State administers the program in lieu of the Federal government, although EPA retains enforcement authority under RCRA sections 3008, 3013, and 7003. Because the new Federal requirements in today's final rule are promulgated under non-HSWA authority, they are not Federally enforceable in an authorized State until the State has adopted equivalent (or more stringent) standards under its authorized laws and regulations, and those changes have

been approved by EPA. See RCRA section 3006, 42 U.S.C. 6926. Thus, upon their effective date, these requirements will be applicable only in those States that do not have authorization.

It should be noted that authorized States are only required to modify their programs when EPA promulgates Federal standards that are more stringent or broader in scope than existing Federal standards. RCRA section 3009 allows States to impose standards that are more stringent than those in the Federal program (see also 40 CFR 271.1(i)(1)). Thus, for those Federal changes that are less stringent, or reduce the scope of the Federal program, States are not required to modify their programs. The revisions to the Federal RCRA Subtitle C program that are promulgated today are considered to be less stringent than the existing Federal regulations. However, EPA believes that their adoption by States will greatly enhance the implementation of the upcoming MACT standards, and ease the permitting burden on the States. Thus, EPA strongly urges States to adopt all aspects of today's final rule as quickly as their legislative and regulatory processes will allow.

B. Program Delegation Under the Clean Air Act

Today's final rule adds notification procedures for hazardous waste combustors under Title III. Specifically, today's rule requires sources to provide to the permitting agency a Notification of Intent to Comply (NIC) within a year following promulgation of new emissions standards in 40 CFR part 63 Subpart EEE, and a Progress Report within two years. As part of the process of developing a NIC, the source is also required to conduct additional public involvement activities, in particular an informal meeting with the community. Section 112(l) of the Clean Air Act allows EPA to approve State rules or programs for the implementation and enforcement of emission standards and other requirements for air pollutants subject to section 112. Under this authority, EPA has developed delegation procedures and requirements located at 40 CFR Part 63, Subpart E, for NESHAPS under Title III of the CAA (See 57 FR 32250, July 21, 1992).

Submission of rules or programs by States under 40 CFR Part 63 is voluntary. Once a State receives approval from EPA for a standard under section 112(l) of the CAA, the State is delegated the authority to implement and enforce the approved State rules or programs in lieu of the otherwise applicable federal rules (the approved State standard would be federally enforceable). States may also apply for a partial Title III program, such that the State is not required to adopt all rules promulgated in 40 CFR Part 63. EPA will administer any rules federally promulgated under section 112 of the CAA that have not been delegated to the State.

VIII. Administrative Requirements/ Compliance With Executive Order

A. Regulatory Impact Analysis Under Executive Order 12866

Under Executive Order No. 12866, (58 FR 51735 (October 4, 1993)) the Agency must determine whether the regulatory action is "significant" and therefore subject to formal review by the Office of Management and Budget (OMB) and to the requirements of the Executive Order, which include assessing the costs and benefits anticipated as a result of the proposed regulatory action. The Order defines "significant regulatory action" as one that is likely to result in a rule that may: (1) Have an annual effect on the economy of $100 million or more or adversely affect in a material way the economy, a sector of the economy, productivity, competition, jobs, the environment, public health or safety, or State, local, or tribal governments or communities; (2) create serious inconsistency or otherwise interfere with an action taken or planned by another agency; (3) materially alter the budgetary impact of entitlements, grants, user fees, or loan programs or the rights and obligations of recipients thereof; or (4) raise novel legal or policy issues arising out of legal mandates, the President's priorities, or the principles set forth in the Executive Order.

EPA has determined that today's final rule is not "significant" under points one through three above. The Agency is sensitive, however, to interpretations that may define today's action as "significant" under point number four above, due to the nature of the policy issues raised and recognizes today's action as significant. The Agency has examined economic impacts potentially associated with the three key elements of today's action: the comparable fuel exclusion, waste minimization incentives, and streamlined RCRA permitting modifications. The comparable fuels exclusion in today's final rule will result in national annual cost savings to generators ranging from approximately $11 to $36 million, net of the cost of gaining the exclusion. Blending and combustion facilities, however, are estimated to experience reduced receipts for managing hazardous wastes, coupled with the costs of replacing these materials with more expensive substitutes. The combined impact is estimated to cost these firms an additional $3 to $13 million per year. Today's action also allows sources to apply for up to a one year extension of the three-year compliance period for implementation of waste minimization procedures. Overall, this extension is likely to provide a greater incentive for facilities with on-site combustion units to implement waste minimization options rather than to continue burning hazardous wastes and implement appropriate control technologies. The degree to which this incentive will change the waste burning behavior of combustion facilities is undetermined. EPA is also implementing streamlined procedures for modifying RCRA permits at hazardous waste combustion units. Only those states that regulate combustion units and choose to adopt the streamlined modification system would have to undergo rulemaking and authorization for the streamlined permitting process. The Agency estimates that approximately half of the states with MACT-regulated combustion units will not alter their current permitting system. Based on the average cost to a state for rulemaking and authorization, the Agency estimates aggregate national costs for those states that would modify their systems at a one-time cost of no more than $685,000. In addition to rulemaking and authorization costs, the aggregate national cost for permit review may be as high as $3.8 million. For more information on the cost impacts of today's final rule, see the Economic Analysis Report for the Combustion MACT Fast-Track Rulemaking, March 1998, which is part of the docket for this rule.

B. Regulatory Flexibility Act

The Regulatory Flexibility Act (RFA) of 1980 requires Federal agencies to consider "small entities" throughout the regulatory process. Section 603 of the RFA requires an initial screening analysis to be performed to determine whether small entities will be adversely affected by the regulation. If affected small entities are identified, regulatory alternatives must be considered to mitigate the potential impacts. Small entities as described in the Act are only those "businesses, organizations and governmental jurisdictions subject to regulation."

EPA has determined that today's rule will primarily affect large scale facilities. Furthermore, since today's final notice generally provides savings

over current requirements, EPA believes that any small entities engaged in activity covered by the rule will not be adversely affected. Therefore, EPA provides the following certification under the Regulatory Flexibility Act, as amended by the Small Business Regulatory Enforcement Fairness Act. Pursuant to the provision at 5 U.S.C., I hereby certify that this rule will not have a significant economic impact on a substantial number of small entities. A more detailed discussion of small entity impacts is presented in the Economic Analysis Report.

C. Paperwork Reduction Act

The Office of Management and Budget (OMB) has approved the information collection requirements contained in this rule under the provisions of the *Paperwork Reduction Act*, 44 U.S.C. 3501 *et seq.* and has assigned OMB control number 2050–0073.

The incremental annual public reporting and record keeping burden for this collection of information is estimated to be 55,196 hours at a cost of about $5,164,000. For those generators applying for the comparable/syngas fuel exclusion, the average annual respondent reporting burden is estimated to be 0.5 hours per facility and the average annual record keeping burden is estimated to be 47.3 hours per facility. For burners of comparable/syngas fuels, there is no reporting burden and the annual record keeping burden is 8.0 hours per facility. For HWCs complying with the notification of intent to comply regulations, the average annual reporting burden is 300.5 hours per facility and the average annual record keeping burden is 9.0 hours per facility.

This estimate includes the time needed to review instructions; develop, acquire, install, and utilize technology and systems for the purpose of collecting, validating, and verifying information, processing and maintaining information, and disclosing and providing information; adjust the existing ways to comply with any previously applicable instructions and requirements; train personnel to respond to collection of information; search existing data sources; complete and review the collection of information; and transmit or otherwise disclose the information.

During its review of the proposed rule ICR, OMB offered comments concerning the burdens associated with the proposed testing requirements and records retention for the comparable fuel/syngas exclusion. In the final rule, EPA is allowing generators to use process knowledge and requiring testing for only those constituents the generator determines should be in the waste. The frequency of the testing will be specified by the generator in the waste analysis plan. With regards to records retention, the final rule will require the retention of records of all comparable and syngas fuel-related information for three years. EPA also received several public comments on the final rule ICR which was noticed on January 28, 1998 at 63 FR 4249. EPA has responded to those comments in the supporting statement for the ICR.

EPA estimates that the addition of the comparable fuels exclusion will cause the BIF universe to decrease by 25 facilities. Although the burden reduction is not reflected in the ICR, EPA expects reporting and recordkeeping requirements for BIFs to decrease by 70,743 hours (18 percent) and $7,493,221 (15 percent) annually. EPA will revise the ICR to reflect this burden reduction when it finalizes the emissions standards for hazardous waste combustors.

EPA is also amending the table of currently approved ICR control numbers issued by OMB for various regulations. This amendment updates the table to display accurately this final rule. This display of the OMB control numbers and their subsequent codification in the Code of Federal Regulations (CFR) at 40 CFR Part 9 satisfies the requirements of the Paperwork Reduction Act (44 U.S.C. 3501 *et seq.*) and OMB's implementing regulations at 5 CFR Part 1320.

An Agency may not conduct or sponsor, and a person is not required to respond to a collection of information unless it displays a currently valid OMB control number. The OMB control numbers for EPA's regulations are displayed in 40 CFR Part 9.

Send comments regarding the burden estimates or any other aspect of this collection of information, including suggestions for reducing this burden to Chief, OPPE Regulatory Information Division; U.S. Environmental Protection Agency (2136); 401 M Street, S.W.; Washington, DC 20460; and to the Office of Information and Regulatory Affairs, Office of Management and Budget, Washington, DC 20503, marked "Attention: Desk Officer for EPA." Include the ICR number in any correspondence.

D. Unfunded Mandates

Title II of the Unfunded Mandates Reform Act of 1995 (UMRA), P.L. 104–4, establishes requirements for Federal agencies to assess the effects of their regulatory actions on State, Tribal, and local governments and the private sector. Under section 202 of the UMRA, EPA generally must prepare a written statement, including a cost-benefit analysis, for proposed and final rules with "Federal mandates" that may result in expenditures to State, local, and Tribal governments, in the aggregate, or to the private sector, of $100 million or more in any one year. When a written statement is needed for an EPA rule, section 205 of the UMRA generally requires EPA to identify and consider a reasonable number of regulatory alternatives and adopt the least costly, most cost-effective, or least burdensome alternative that achieves the objectives of the rule. The provisions of section 205 do not apply when they are inconsistent with applicable law. Moreover, section 205 allows EPA to adopt an alternative other than the least costly, most cost-effective or least burdensome alternative if the Administrator publishes with the final rule an explanation why that alternative was not adopted. Before EPA establishes any regulatory requirements that may significantly or uniquely affect small governments, including Tribal governments, it must have developed under section 203 of the UMRA a small government agency plan. The plan must provide for notifying potentially affected small governments, giving them meaningful and timely input in the development of EPA regulatory proposals with significant Federal intergovernmental mandates, and informing, educating, and advising them on compliance with the regulatory requirements.

EPA has determined that this rule does not contain a Federal mandate that may result in expenditures of $100 million or more for State, local, and Tribal governments, in the aggregate, or the private sector in any one year. EPA has estimated that the total potential cost to State, local, and Tribal governments would not exceed approximately $4.5 million over ten years. Thus, today's rule is not subject to the requirements of sections 202 and 205 of the UMRA.

IX. Submission to Congress and the General Accounting Office

Under 5 U.S.C. 801(a)(1)(A) as added by the Small Business Regulatory Enforcement Fairness Act of 1996, EPA submitted a report containing this rule and other required information to the U.S. Senate, the U.S. House of Representatives and the Comptroller General of the General Accounting Office prior to publication of the rule in today's **Federal Register**. This rule is not a "major rule" as defined by 5 U.S.C. 804(2), therefore, the effective date of the rule is not affected.

X. Environmental Justice

A. Applicability of Executive Order 12898

EPA is committed to address environmental justice concerns and is assuming a leadership role in environmental justice initiatives to enhance environmental quality for all residents of the United States. The Agency's goals are to ensure that no segment of the population, regardless of race, color, national origin, or income bears disproportionately high and adverse human health and environmental effects as a result of EPA's policies, programs, and activities, and all people live in clean and sustainable communities.

B. Potential Effects

Today's final rule is not expected to cause any disproportionate impacts to minority or low income communities versus affluent or non-minority communities.

XI. Children's Health

Executive Order 13045: The Executive Order 13045 applies to any rule that EPA determines (1) "economically significant" as defined under Executive Order 12866, and (2) the environmental health or safety risk addressed by the rule has a disproportionate effect on children. If the regulatory action meets both criteria, the Agency must evaluate the environmental health or safety effects of the planned rule on children; and explain why the planned regulation is preferable to other potentially effective and reasonably feasible alternatives considered by the Agency

This final rule is not subject to E.O. 13045, entitled "Protection of Children from Environmental Health Risks and safety Risks (62 FR 19885, April 23, 1997), because: (a) "This is not an economically significant regulatory action as defined by E.O. 12866."

XII. National Technology Transfer and Advancement Act

Under section 12(d) of the National Technology Transfer and Advancement Act, the Agency is directed to use voluntary consensus standards in its regulatory activities unless to do so would be inconsistent with applicable law or otherwise impractical. Voluntary consensus standards are technical standards (e.g., materials specifications, test methods, sampling procedures, business practices, etc.) that are developed or adopted by voluntary consensus standard bodies. Where available and potentially applicable voluntary consensus standards are not used by EPA, the Act requires the Agency to provide Congress, through the Office of Management and Budget, an explanation of the reasons for not using such standards.

EPA is not finalizing any new test methods or other technical standards as part of today's final rule. Thus, the Agency has no need to consider the use of voluntary consensus standards in developing this final rule.

List of Subjects

40 CFR Part 63

Administrative practice and procedure, Air pollution control, Hazardous substances, Intergovernmental relations, Reporting and recordkeeping requirements.

40 CFR Part 261

Hazardous waste, Recycling, Reporting and record keeping requirements.

40 CFR Part 270

Administrative practice and procedure, Confidential business information, Emergency responses, Hazardous materials transportation, Hazardous waste, Permit application requirements, Permit modifications, Reporting and recordkeeping requirements.

Dated: June 5, 1998.

Carol M. Browner,

Administrator.

For the reasons set forth in the preamble, 40 CFR Parts 63, 261, and 270 are amended as follows:

PART 63—NATIONAL EMISSION STANDARDS FOR HAZARDOUS AIR POLLUTANTS FOR SOURCE CATEGORIES

1. The authority citation for part 63 continues to read as follows:

Authority: 42 U.S.C. 7401 *et seq.*

2. Part 63 is amended by adding Subpart EEE, to read as follows:

Subpart EEE—National Emission Standards for Hazardous Air Pollutants From Hazardous Waste Combustors

Sec.

63.1200–63.1210 [Reserved]
63.1211 Notification requirements.
63.1212 Progress reports.
63.1213 Certification.
63.1214 Extension of the compliance date.
63.1215 Sources that become affected sources after the effective date of this subpart.
63.1216 Extension of compliance date to install pollution prevention or waste minimization controls.

§ 63.1211 Notification requirements.

(a) *Notification of Intent To Comply (NIC).* (1) All hazardous waste combustors subject to this subpart shall prepare a Notification of Intent to Comply that includes the following information:

(i) General information:

(A) The name and address of the owner/operator and the source;

(B) Whether the source is a major or an area source;

(C) Waste minimization and emission control technique(s) being considered;

(D) Emission monitoring technique(s) being considered;

(E) Waste minimization and emission control technique(s) effectiveness;

(F) A description of the evaluation criteria used or to be used to select waste minimization and/or emission control technique(s); and

(G) A statement that the source intends to comply with this subpart by controlling emissions from the combustion of hazardous waste pursuant to the standards of this subpart.

(ii) Information on key activities and estimated dates for these activities that will bring the source into compliance with emission control requirements of this subpart. The submission of key activities and dates is not intended to be static and may be revised by the source during the period the NIC is in effect. Revisions shall be submitted to the regulatory authority and be made available to the public. The following are the key activities and dates that shall be included:

(A) The dates for beginning and completion of engineering studies to evaluate emission control systems or process changes for emissions;

(B) The date by which contracts for emission control systems or process changes for emission control will be awarded, or the date by which orders will be issued for the purchase of component parts to accomplish emission control or process changes;

(C) The date by which construction applications will be submitted;

(D) The date by which on-site construction, installation of emission control equipment, or process change is to be initiated;

(E) The date by which on-site construction, installation of emission control equipment, or process change is to be completed; and

(F) The date by which final compliance is to be achieved. The individual dates and milestones listed in paragraphs (a)(1)(ii)(A) through (F) of this section as part of the NIC are not requirements and therefore are not enforceable deadlines; the Agency is

requiring paragraphs (a)(1)(ii)(A) through (F) of this section as part of the NIC only to inform the public of the source's intentions towards coming into compliance.

(iii) A summary of the public meeting required under paragraph (b) of this section.

(iv) For any source that does not intend to comply, but will not stop burning hazardous waste as required under paragraph (c) of this section, a certification that the designated source will:

(A) Stop burning hazardous waste on or before the compliance date of the emission standards of this Subpart; and

(B) Be necessary to combust the hazardous waste from another on-site source, during the year prior to the compliance date of the emission standards of this Subpart, because that other source is:

(*1*) Installing equipment to come into compliance with the emission standards of this Subpart; or

(*2*) Installing source reduction modifications to eliminate the need for further combustion of wastes.

(2) A draft of the NIC must be made available for public review no later than 30 days prior to the public meeting required under paragraph (b)(1) of this section.

(3) The final NIC must be submitted to the permitting agency no later than one year following the effective date of the emission standards of this subpart.

(b) *NIC Public Meeting and Notice.* (1) Prior to the submission of the NIC to the permitting agency, and no later than 10 months after the effective date of the emission standards of this subpart, the source shall hold at least one informal meeting with the public to discuss anticipated activities described in the draft NIC for achieving compliance with the MACT standards promulgated in this subpart. The source must post a sign-in sheet or otherwise provide a voluntary opportunity for attendees to provide their names and addresses.

(2) The source shall submit a summary of the meeting, along with the list of attendees and their addresses developed under paragraph (b)(1) of this section, and copies of any written comments or materials submitted at the meeting, to the permitting agency as part of the final NIC, in accordance with paragraph (a)(1)(iii) of this section.

(3) The source must provide public notice of the NIC meeting at least 30 days prior to the meeting. The source shall provide public notice in all of the following forms:

(i) *Newspaper advertisement.* The source shall publish a notice in a newspaper of general circulation in the county or equivalent jurisdiction of the source. In addition, the source shall publish the notice in newspapers of general circulation in adjacent counties or equivalent jurisdiction where such publication would be necessary to inform the affected public. The notice must be published as a display advertisement.

(ii) *Visible and accessible sign.* The source shall post a notice on a clearly marked sign at or near the source. If the source places the sign on the source's property, then the sign must be large enough to be readable from the nearest spot where the public would pass by the source.

(iii) *Broadcast media announcement.* The source shall broadcast a notice at least once on at least one local radio station or television station.

(iv) *Notice to the facility mailing list.* The source shall provide a copy of the notice to the facility mailing list in accordance with § 124.10(c)(1)(ix) of this chapter.

(4) The notices required under paragraph (b)(3) of this section must include:

(i) The date, time, and location of the meeting;

(ii) A brief description of the purpose of the meeting;

(iii) A brief description of the source and proposed operations, including the address or a map (e.g., a sketched or copied street map) of the source location;

(iv) A statement encouraging people to contact the source at least 72 hours before the meeting if they need special access to participate in the meeting;

(v) A statement describing how the draft NIC can be obtained; and

(vi) The name, address, and telephone number of a contact person for the NIC.

(c) *Sources that do not intend to comply.* Those sources subject to the requirements of this subpart, except those sources meeting the requirements of paragraph (a)(1)(iv) of this section:

(1) Who signify in their NIC an intent not to comply with the requirements of this Subpart, must stop burning hazardous waste on or before two years after the effective date of the emmission standards of this subpart;

(2) Who do not intend to comply with this subpart must include in their NIC a schedule that includes key dates for the steps to be taken to stop burning hazardous waste. Key dates include the date for submittal of RCRA closure documents.

§ 63.1212 Progress reports.

(a) *General.* Not later than two years after the effective date of the emission standards of this subpart, all sources subject to this Subpart except those hazardous waste combustion sources that comply with paragraph (b)(2) of this section shall:

(1) Complete engineering design for any physical modifications to the source needed to comply with the emissions standards of this subpart;

(2) Submit applicable construction applications to the applicable regulatory authority; and

(3) Enter into a binding contractual commitment to purchase, fabricate, and install any equipment, devices, and ancillary structures needed to comply with the emission requirements of this subpart.

(b) *Demonstration* (1) Hazardous waste combustion sources shall submit to the regulatory authority a progress report on or before two years after the effective date of the emission standards of this subpart which contains information demonstrating that the source has met the requirements of paragraph (a) of this section. This information will be used by the regulatory authority to determine if the source has made adequate progress towards compliance with the applicable emission standards.

(2) Sources that intend to come into compliance with the emissions standards of this subpart, but can do so without undertaking any of the activities described in paragraph (a) of this section, shall submit documentation either:

(i) Demonstrating that the source, at the time of the progress report, is in compliance with the emissions requirements; or

(ii) Specifying the steps that will be taken to bring the source into compliance, without undertaking any of the activities listed in paragraphs (a)(1) through (3) of this section.

(3) Sources that fail to comply with paragraph (a) above or paragraph (b)(2) of this section shall stop burning hazardous waste on or before the date two years after the effective date of the emission standards of this subpart.

(c) *Schedule.* (1) The progress report shall contain a detailed schedule that lists key dates for all projects that will bring the source into compliance with the requirements of this subpart (i.e., key dates for the activities required under paragraphs (b)(1)(i) through (iii) of this section). Dates shall cover the time frame from the progress report through the compliance date of the emission standards of this subpart.

(2) The schedule shall contain the following dates:

(i) Bid and award dates for construction contracts and equipment supply contractors;

(ii) Milestones such as ground breaking, completion of drawings and specifications, equipment deliveries, intermediate construction completions, and testing;

(iii) The dates on which applications were submitted for or obtained operating and construction permits or licenses;

(iv) The dates by which approvals of any permits or licenses are anticipated; and

(v) The projected date by which the source will be in compliance with the requirements of this subpart.

(d) *Notice of intent to comply.* The progress report shall contain a statement that the source intends or does not intend to come into compliance with the applicable emission control requirements of this subpart.

(e) *Sources that do not intend to comply.* (1) Sources that: indicated in their NIC their intent not to comply with this subpart and stop burning hazardous waste prior to the submittal of a progress report; or meet the requirements of paragraph (a)(1)(iv) of this section are not required to include the requirements of paragraphs (b) and (c) of this section to their progress report, but shall include in their progress report: the date on which the source stopped burning hazardous waste; and the date(s) on which RCRA closure documents were submitted.

(2) Those sources that signify in the progress report, submitted not later than two years after the effective date of the emission standards of this subpart, their intention not to comply with the requirements of this subpart must stop burning hazardous waste on or before the date two years after the effective date of the emission standards of this subpart.

§ 63.1213 Certification.

(a) The Notice of Intent to Comply (NIC) and Progress Report submitted shall contain the following certification signed and dated by an authorized representative of the source:

I certify under penalty of law that I have personally examined and am familiar with the information submitted in this document and all attachments and that, based on my inquiry of those individuals immediately responsible for obtaining the information, I believe that the information is true, accurate, and complete. I am aware that there are significant penalties for submitting false information, including the possibility of fine and imprisonment.

(b) An authorized representative should be a responsible corporate officer (for a corporation), a general partner (for a partnership), the proprietor (of a sole proprietorship), or a principal executive officer or ranking elected official (for a municipality, State, Federal, or other public agency).

§ 63.1214 Extension of the compliance date.

(a) A source that intends to come into compliance with the requirements of this subpart, but due to the installation of controls will not meet the compliance date, may request an extension of the compliance date for one year.

(b) Sources subject to this subpart shall follow the requirements of § 63.6(i)(4) or § 63.1216 to request an extension of the compliance date.

§ 63.1215 Sources that become affected sources after the effective date of the emission standards of this subpart.

(a) A source that begins to burn hazardous waste after the effective date of the emission standards of this subpart, therefore becoming an affected source, but prior to 9 months after the effective date of the emission standards of this subpart shall comply with all the requirements of §§ 63.1211 through 63.1213 and associated time frames for public meetings and document submittals.

(b) A source that intends to begin burning hazardous waste more than 9 months after the effective date of the emission standards of this subpart, therefore becoming an affected source, shall meet all the requirements of §§ 63.1211 through 63.1213 prior to burning hazardous waste.

(1) Such sources shall make a draft NIC available, notice their public meeting, hold their public meeting, and submit a final NIC prior to burning hazardous waste.

(2) Such sources also shall submit their progress report at the time of the submittal of their final NIC.

§ 63.1216 Extension of the compliance date to install pollution prevention or waste minimization controls.

(a) *Applicability.* The owner or operator of any source subject to the requirements of this subpart may request from the Administrator or State with an approved Title V program an extension of one year to comply with the emission standards in this subpart, if the owner or operator can reasonably document that the installation of pollution prevention or waste minimization measures will significantly reduce the amount and/or toxicity of hazardous wastes entering the feedstream(s) of the combustion device(s) subject to this subpart, and that the facility could not otherwise install the necessary control measures and comply within three years after the effective date of the emission standards of this subpart.

(b) *Requirements for requesting an extension.* Requests for a one-year extension must be in writing, must be received not later than 12 months before the affected source's compliance date, and must contain the following information:

(1) A description of pollution prevention or waste minimization controls that, when installed, will significantly reduce the amount and/or toxicity of hazardous wastes entering the feedstream(s) of the combustion device(s) subject to this subpart. Pollution prevention or waste minimization measures may include: equipment or technology modifications, reformulation or redesign of products, substitution of raw materials, improvements in work practices, maintenance, training, inventory control, or recycling practices conducted as defined in 40 CFR 261.1(c);

(2) A description of other pollution controls to be installed that are necessary to comply with the emission standards;

(3) A reduction goal or estimate of the annual reductions in quantity and/or toxicity of hazardous waste(s) entering combustion feedstream(s) that will occur by installing the proposed pollution prevention or waste minimization measures;

(4) A comparison of reductions in the amounts and/or toxicity of hazardous wastes combusted after installation of pollution prevention or waste minimization measures to the amounts and/or toxicity of hazardous wastes combusted prior to the installation of these measures; and, if the difference is less than a fifteen percent reduction, a comparison to pollution prevention and waste minimization reductions recorded during the previous five years;

(5) Reasonable documentation that installation of the pollution prevention or waste minimization changes will not result in a net increase (except for documented increases in production) of hazardous constituents released to the environment through other emissions, wastes or effluents;

(6) Reasonable documentation that the design and installation of waste minimization and other measures that are necessary for compliance cannot otherwise be installed within the three year compliance period, and

(7) The information required in 40 CFR 63.6(i)(6)(i)(B) through (D).

(8) Documentation prepared under an existing State required pollution prevention program that contains the information may be enclosed with a

request for extension in lieu of paragraphs (b)(1) through (7) of this section.

(c) *Approval of request for extension of compliance.* Based on the information provided in any request made under paragraph (a) of this section, the Administrator or State with an approved Title V program may grant an extension of compliance with the emission standards identified in paragraph (a) of this section. The extension will be in writing in accordance with §§ 63.6(i)(10)(i) through 63.6(i)(10)(v)(A). EPA and States must consider the information required in paragraph (a) of this section in approving or denying requests for one-year compliance extensions.

PART 261—IDENTIFICATION AND LISTING OF HAZARDOUS WASTE

1. The authority citation for part 261 continues to read as follows:

Authority: 42 U.S.C. 6905, 6912(a), 6921, 6922, and 6938.

2. Section 261.4 is amended by adding paragraph (a)(16) to read as follows:

§ 261.4 Exclusions.

(a) * * *

(16) Comparable fuels or comparable syngas fuels (i.e., comparable/syngas fuels) that meet the requirements of § 261.38.

* * * * *

3. Section 261.38 is added to read as follows:

§ 261.38 Comparable/Syngas Fuel Exclusion.

Wastes that meet the following comparable/syngas fuel requirements are not solid wastes:

(a) *Comparable fuel specifications.*—(1) *Physical specifications.*—(i) *Heating value.* The heating value must exceed 5,000 BTU/lbs. (11,500 J/g).

(ii) *Viscosity.* The viscosity must not exceed: 50 cs, as-fired.

(2) *Constituent specifications.* For compounds listed in table 1 to this section the specification levels and, where non-detect is the specification, minimum required detection limits are: (see Table 1).

(b) *Synthesis gas fuel specification.*—Synthesis gas fuel (i.e., syngas fuel) that is generated from hazardous waste must:

(1) Have a minimum Btu value of 100 Btu/Scf;

(2) Contain less than 1 ppmv of total halogen;

(3) Contain less than 300 ppmv of total nitrogen other than diatomic nitrogen (N_2);

(4) Contain less than 200 ppmv of hydrogen sulfide; and

(5) Contain less than 1 ppmv of each hazardous constituent in the target list of Appendix VIII constituents of this part.

TABLE 1 TO § 261.38: DETECTION AND DETECTION LIMIT VALUES FOR COMPARABLE FUEL SPECIFICATION

Chemical name	CAS No.	Concentration limit (mg/kg at 10,000 BTU/lb)	Minimum required detection limit (mg/kg)
Total Nitrogen as N	na	4900	
Total Halogens as Cl	na	540	
Total Organic Halogens as Cl	na	25 or individual halogenated organics listed below.	
Polychlorinated biphenyls, total [Arocolors, total][a]	1336–36–3	Non-detect	1.4
Cyanide, total	57–12–5	Non-detect	1.0
Metals:			
Antimony, total	7440–36–0	7.9	
Arsenic, total	7440–38–2	0.23	
Barium, total	7440–39–3	23	
Beryllium, total	7440–41–7	1.2	
Cadmium, total	7440–43–9	1.2	
Chromium, total	7440–47–3	2.3	
Cobalt	7440–48–4	4.6	
Lead, total	7439–92–1	31	
Manganese	7439–96–5	1.2	
Mercury, total	7439–97–6	0.24	
Nickel, total	7440–02–0	58	
Selenium, total	7782–49–2	0.15	
Silver, total	7440–22–4	2.3	
Thallium, total	7440–28–0	23	
Hydrocarbons:			
Benzo[a]anthracene	56–55–3	1100	
Benzene	71–43–2	4100	
Benzo[b]fluoranthene	205–99–2	960	
Benzo[k]fluoranthene	207–08–9	1900	
Benzo[a]pyrene	50–32–8	960	
Chrysene	218–01–9	1400	
Dibenzo[a,h]anthracene	53–70–3	960	
7,12-Dimethylbenz[a]anthracene	57–97–6	1900	
Fluoranthene	206–44–0	1900	
Indeno(1,2,3-cd)pyrene	193–39–5	960	
3-Methylcholanthrene	56–49–5	1900	
Naphthalene	91–20–3	3200	
Toluene	108–88–3	36000	
Oxygetes:			

TABLE 1 TO § 261.38: DETECTION AND DETECTION LIMIT VALUES FOR COMPARABLE FUEL SPECIFICATION—Continued

Chemical name	CAS No.	Concentration limit (mg/kg at 10,000 BTU/lb)	Minimum required detection limit (mg/kg)
Acetophenone	98-86-2	1900	
Acrolein	107-02-8	37	
Allyl alcohol	107-18-6	30	
Bis(2-ethylhexyl)phthalate [Di-2-ethylhexyl phthalate]	117-81-7	1900	
Butyl benzyl phthalate	85-68-7	1900	
o-Cresol [2-Methyl phenol]	95-48-7	220	
m-Cresol [3-Methyl phenol]	108-39-4	220	
p-Cresol [4-Methyl phenol]	106-44-5	220	
Di-n-butyl phthalate	84-74-2	1900	
Diethyl phthalate	84-66-2	1900	
2,4-Dimethylphenol	105-67-9	1900	
Dimethyl phthalate	131-11-3	1900	
Di-n-octyl phthalate	117-84-0	960	
Endothall	145-73-3	100	
Ethyl methacrylate	97-63-2	37	
2-Ethoxyethanol [Ethylene glycol monoethyl ether]	110-80-5	100	
Isobutyl alcohol	78-83-1	37	
Isosafrole	120-58-1	1900	
Methyl ethyl ketone [2-Butanone]	78-93-3	37.	
Methyl methacrylate	80-62-6	37.	
1,4-Naphthoquinone	130-15-4	1900.	
Phenol	108-95-2	1900.	
Propargyl alcohol [2-Propyn-l-ol]	107-19-7	30.	
Safrole	94-59-7	1900.	
Sulfoted Organics:			
Carbon disulfide	75-15-0	Non-detect	37
Disulfoton	298-04-4	Non-detect	1900
Ethyl methanesulfonate	62-50-0	Non-detect	1900
Methyl methanesulfonate	66-27-3	Non-detect	1900
Phorate	298-02-2	Non-detect	1900
1,3-Propane sultone	1120-71-4	Non-detect	100
Tetraethyldithiopyrophosphate [Sulfotepp]	3689-24-5	Non-detect	1900
Thiophenol [Benzenethiol]	108-98-5	Non-detect	30
O,O,O-Triethyl phosphorothioate	126-68-1	Non-detect	1900
Nitrogenated Organics:			
Acetonitrile [Methyl cyanide]	75-05-8	Non-detect	37
2-Acetylaminofluorene [2-AAF]	53-96-3	Non-detect	1900
Acrylonitrile	107-13-1	Non-detect	37
4-Aminobiphenyl	92-67-1	Non-detect	1900
4-Aminopyridine	504-24-5	Non-detect	100
Aniline	62-53-3	Non-detect	1900
Benzidine	92-87-5	Non-detect	1900
Dibenz[a,j]acridine	224-42-0	Non-detect	1900
O,O-Diethyl O-pyrazinyl phophoro-thioate [Thionazin]	297-97-2	Non-detect	1900
Dimethoate	60-51-5	Non-detect	1900
p-(Dimethylamino)azobenzene [4-Dimethylaminoazobenzene]	60-11-7	Non-detect	1900
3,3'-Dimethylbenzidine	119-93-7	Non-detect	1900
α,α-Dimethylphenethylamine	122-09-8	Non-detect	1900
3,3'-Dimethoxybenzidine	119-90-4	Non-detect	100
1,3-Dinitrobenzene [m-Dinitrobenzene]	99-65-0	Non-detect	1900
4,6-Dinitro-o-cresol	534-52-1	Non-detect	1900
2,4-Dinitrophenol	51-28-5	Non-detect	1900
2,4-Dinitrotoluene	121-14-2	Non-detect	1900
2,6-Dinitrotoluene	606-20-2	Non-detect	1900
Dinoseb [2-sec-Butyl-4,6-dinitrophenol]	88-85-7	Non-detect	1900
Diphenylamine	122-39-4	Non-detect	1900
Ethyl carbamate [Urethane]	51-79-6	Non-detect	100
Ethylenethiourea (2-Imidazolidinethione)	96-45-7	Non-detect	110
Famphur	52-85-7	Non-detect	1900
Methacrylonitrile	126-98-7	Non-detect	37
Methapyrilene	91-80-5	Non-detect	1900
Methomyl	16752-77-5	Non-detect	57
2-Methyllactonitrile [Acetone cyanohydrin]	75-86-5	Non-detect	100
Methyl parathion	298-00-0	Non-detect	1900
MNNG (N-Metyl-N-nitroso-N'-nitroguanidine)	70-25-7	Non-detect	110
1-Naphthylamine, [α-Naphthylamine]	134-32-7	Non-detect	1900
2-Naphthylamine, [β-Naphthylamine]	91-59-8	Non-detect	1900
Nicotine	54-11-5	Non-detect	100

TABLE 1 TO § 261.38: DETECTION AND DETECTION LIMIT VALUES FOR COMPARABLE FUEL SPECIFICATION—Continued

Chemical name	CAS No.	Concentration limit (mg/kg at 10,000 BTU/lb)	Minimum required detection limit (mg/kg)
4-Nitroaniline, [p-Nitroaniline]	100–01–6	Non-detect	1900
Nitrobenzene	98–95–3	Non-detect	1900
p-Nitrophenol, [p-Nitrophenol]	100–02–7	Non-detect	1900
5-Nitro-o-toluidine	99–55–8	Non-detect	1900
N-Nitrosodi-n-butylamine	924–16–3	Non-detect	1900
N-Nitrosodiethylamine	55–18–5	Non-detect	1900
N-Nitrosodiphenylamine, [Diphenylnitrosamine]	86–30–6	Non-detect	1900
N-Nitroso-N-methylethylamine	10595–95–6	Non-detect	1900
N-Nitrosomorpholine	59–89–2	Non-detect	1900
N-Nitrosopiperidine	100–75–4	Non-detect	1900
N-Nitrosopyrrolidine	930–55–2	Non-detect	1900
2-Nitropropane	79–46–9	Non-detect	30
Parathion	56–38–2	Non-detect	1900
Phenacetin	62–44–2	Non-detect	1900
1,4-Phenylene diamine, [p-Phenylenediamine]	106–50–3	Non-detect	1900
N-Phenylthiourea	103–85–5	Non-detect	57
2-Picoline [alpha-Picoline]	109–06–8	Non-detect	1900
Propythioracil [6-Propyl-2-thiouracil]	51–52–5	Non-detect	100
Pyridine	110–86–1	Non-detect	1900
Strychnine	57–24–9	Non-detect	100
Thioacetamide	62–55–5	Non-detect	57
Thiofanox	39196–18–4	Non-detect	100
Thiourea	62–56–6	Non-detect	57
Toluene-2,4-diamine [2,4-Diaminotoluene]	95–80–7	Non-detect	57
Toluene-2,6-diamine [2,6-Diaminotoluene]	823–40–5	Non-detect	57
o-Toluidine	95–53–4	Non-detect	2200
p-Toluidine	106–49–0	Non-detect	100
1,3,5-Trinitrobenzne, [sym-Trinitobenzene]	99–35–4	Non-detect	2000
Halogenated Organics [h]:			
Allyl chloride	107–05–1	Non-detect	37
Aramite	104–57–8	Non-detect	1900
Benzal chloride [Dichloromethyl benzene]	98–87–3	Non-detect	100
Benzyl chloride	100–44–77	Non-detect	100
Bis(2-chloroethyl)ether [Dichloroethyl ether]	111–44–4	Non-detect	1900
Bromoform [Tribromomethane]	75–25–2	Non-detect	37
Bromomethane [Methyl bromide]	74–83–9	Non-detect	37
4-Bromophenyl phenyl ether [p-Bromo diphenyl ether]	101–55–3	Non-detect	1900
Carbon tetrachloride	56–23–5	Non-detect	37
Chlordane	57–74–9	Non-detect	14
p-Chloroaniline	106–47–8	Non-detect	1900
Chlorobenzene	108–90–7	Non-detect	37
Chlorobenzilate	510–15–6	Non-detect	1900
p-Chloro-m-cresol	59–50–7	Non-detect	1900
2-Chloroethyl vinyl ether	110–75–8	Non-detect	37
Chloroform	67–66–3	Non-detect	37
Chloromethane [Methyl chloride]	74–87–3	Non-detect	37
2-Chlorophthalene [beta-Chlorophthalene]	91–58–7	Non-detect	1900
2-Chlorophenol [o-Chlorophenol]	95–57–8	Non-detect	1900
Chloroprene [2-Chloro-1,3-butadiene]	1126–99–8	Non-detect	37
2,4-D [2,4-Dichlorophenoxyacetic acid]	94–75–7	Non-detect	7.0
Diallate	2303–16–4	Non-detect	1900
1,2-Dibromo-3-chloropropane	96–12–8	Non-detect	37
1,2-Dichlorobenzene [o-Dichlorobenzene]	95–50–1	Non-detect	1900
1,3-Dichlorobenzene [m-Dichlorobenzene]	541–73–1	Non-detect	1900
1,4-Dichlorobenzene [p-Dichlorobenzene]	106–46–7	Non-detect	1900
3,3′-Dichlorobenzidine	91–94–1	Non-detect	1900
Dichlorodifluoromethane [CFC–12]	75–71–8	Non-detect	37
1,2-Dichloroethane [Ethylene dichloride]	107–06–2	Non-detect	37
1,1-Dichloroethylene [Vinylidene chloride]	75–35–4	Non-detect	37
Dichloromethoxy ethane [Bis(2-chloroethoxy)methane	111–91–1	Non-detect	1900
2,4-Dichlorophenol	120–83–2	Non-detect	1900
2,6-Dichlorophenol	87–65–0	Non-detect	1900
1,2-Dichloropropane [Propylene dichloride]	78–87–5	Non-detect	37
cis-1,3-Dichloropropylene	10061–01–5	Non-detect	37
trans-1,3-Dichloropropylene	10061–02–6	Non-detect	37
1,3-Dichloro-2-propanol	96–23–1	Non-detect	30
Endosulfan I	959–98–8	Non-detect	1.4
Endosulfan II	33213–65–9	Non-detect	1.4

TABLE 1 TO § 261.38: DETECTION AND DETECTION LIMIT VALUES FOR COMPARABLE FUEL SPECIFICATION—Continued

Chemical name	CAS No.	Concentration limit (mg/kg at 10,000 BTU/lb)	Minimum required detection limit (mg/kg)
Endrin	72–20–8	Non-detect ..	1.4
Endrin aldehyde	7421–93–4	Non-detect ..	1.4
Endrin Ketone	53494–70–5	Non-detect ..	1.4
Epichlorohydrin [1-Chloro-2,3-epoxy propane]	106–89–8	Non-detect ..	30
Ethylidene dichloride [1,1-Dichloroethane]	75–34–3	Non-detect ..	37
2-Fluoroacetamide	640–19–7	Non-detect ..	100
Heptachlor	76–44–8	Non-detect ..	1.4
Heptachlor epoxide	1024–57–3	Non-detect ..	2.8
Hexachlorobenzene	118–74–1	Non-detect ..	1900
Hexachloro-1,3-butadiene [Hexachlorobutadiene]	87–68–3	Non-detect ..	1900
Hexachlorocyclopentadiene	77–47–4	Non-detect ..	1900
Hexachloroethane	67–72–1	Non-detect ..	1900
Hexachlorophene	70–30–4	Non-detect ..	1000
Hexachloropropene [Hexachloropropylene]	1888–71–7	Non-detect ..	1900
Isodrin	465–73–6	Non-detect ..	1900
Kepone [Chlordecone]	143–50–0	Non-detect ..	3600
Lindane [gamma-Hexachlorocyclohexane] [gamma-BHC]	58–89–9	non-detect ...	1.4
Methylene chloride [Dichloromethane]	75–09–2	non-detect ...	37
4,4'-methylene-bis(2-chloroaniline)	101–14–4	non-detect ...	100
Methyl iodide [Iodomethane]	74–88–4	non-detect ...	37
Pentachlorobenzene	608–93–5	non-detect ...	1900
Pentachloroethane	76–01–7	non-detect ...	37
Pentachloronitrobenzene [PCNB] [Quintobenzene] [Quintozene]	82–68–8	non-detect ...	1900
Pentachlorophenol	87–86–5	non-detect ...	1900
Pronamide	23950–58–5	non-detect ...	1900
Silvex [2,4,5-Trichlorophenoxypropionic acid]	93–72–1	non-detect ...	7.0
2,3,7,8-Tetrachlorodibenzo-p-dioxin [2,3,7,8-TCDD]	1746–01–6	non-detect ...	30
1,2,4,5-Tetrachlorobenzene	95–94–3	non-detect ...	1900
1,1,2,2-Tetrachloroethane	79–34–5	non-detect ...	37
Tetrachloroethylene [Perchloroethylene]	127–18–4	non-detect ...	37
2,3,4,6-Tetrachlorophenol	58–90–2	non-detect ...	1900
1,2,4-Trichlorobenzene	120–82–1	non-detect ...	1900
1,1,1-Trichloroethane [Methyl chloroform]	71–55–6	non-detect ...	37
1,1,2-Trichloroethane [Vinyl trichloride]	79–00–5	non-detect ...	37
Trichloroethylene	79–01–6	non-detect ...	37
Trichlorofluoromethane [Trichlormonofluoromethane]	75–69–4	non-detect ...	37
2,4,5-Trichlorophenol	95–95–4	non-detect ...	1900
2,4,6-Trichlorophenol	88–06–2	non-detect ...	1900
1,2,3-Trichloropropane	96–18–4	non-detect ...	37
Vinyl Chloride	75–01–4	non-detect ...	37

[a] Absence of PCBs can also be demonstrated by using appropriate screening methods, e.g., immunoassay kit for PCB in oils (Method 4020) or colorimetric analysis for PCBs in oil (Method 9079).

[b] Some minimum required detection limits are above the total halogen limit of 540 ppm. The detection limits reflect what was achieved during EPA testing and analysis and also analytical complexity associated with measuring all halogen compounds on Appendix VIII at low levels. EPA recognizes that in practice the presence of these compounds will be functionally limited by the molecular weight and the total halogen limit of 540 ppm.

(c) *Implementation.*—Waste that meets the comparable or syngas fuel specifications provided by paragraphs (a) or (b) of this section (these constituent levels must be achieved by the comparable fuel when generated, or as a result of treatment or blending, as provided in paragraphs (c)(3) or (4) of this section) is excluded from the definition of solid waste provided that the following requirements are met:

(1) *Notices*—For purposes of this section, the person claiming and qualifying for the exclusion is called the comparable/syngas fuel generator and the person burning the comparable/syngas fuel is called the comparable/syngas burner. The person who generates the comparable fuel or syngas fuel must claim and certify to the exclusion.

(i) State RCRA and CAA Directors in Authorized States or Regional RCRA and CAA Directors in Unauthorized States.—

(A) The generator must submit a one-time notice to the Regional or State RCRA and CAA Directors, in whose jurisdiction the exclusion is being claimed and where the comparable/syngas fuel will be burned, certifying compliance with the conditions of the exclusion and providing documentation as required by paragraph (c)(1)(i)(C) of this section;

(B) If the generator is a company that generates comparable/syngas fuel at more than one facility, the generator shall specify at which sites the comparable/syngas fuel will be generated;

(C) A comparable/syngas fuel generator's notification to the Directors must contain the following items:

(*1*) The name, address, and RCRA ID number of the person/facility claiming the exclusion;

(*2*) The applicable EPA Hazardous Waste Codes for the hazardous waste;

(*3*) Name and address of the units, meeting the requirements of paragraph (c)(2) of this section, that will burn the comparable/syngas fuel; and

(4) The following statement is signed and submitted by the person claiming the exclusion or his authorized representative:

Under penalty of criminal and civil prosecution for making or submitting false statements, representations, or omissions, I certify that the requirements of 40 CFR 261.38 have been met for all waste identified in this notification. Copies of the records and information required at 40 CFR 261.28(c)(10) are available at the comparable/syngas fuel generator's facility. Based on my inquiry of the individuals immediately responsible for obtaining the information, the information is, to the best of my knowledge and belief, true, accurate, and complete. I am aware that there are significant penalties for submitting false information, including the possibility of fine and imprisonment for knowing violations.

(ii) Public notice.—Prior to burning an excluded comparable/syngas fuel, the burner must publish in a major newspaper of general circulation local to the site where the fuel will be burned, a notice entitled "Notification of Burning a Comparable/Syngas Fuel Excluded Under the Resource Conservation and Recovery Act" containing the following information:

(A) Name, address, and RCRA ID number of the generating facility;

(B) Name and address of the unit(s) that will burn the comparable/syngas fuel;

(C) A brief, general description of the manufacturing, treatment, or other process generating the comparable/syngas fuel;

(D) An estimate of the average and maximum monthly and annual quantity of the waste claimed to be excluded; and

(E) Name and mailing address of the Regional or State Directors to whom the claim was submitted.

(2) *Burning.*—The comparable/syngas fuel exclusion for fuels meeting the requirements of paragraphs (a) or (b) and (c)(1) of this section applies only if the fuel is burned in the following units that also shall be subject to Federal/State/local air emission requirements, including all applicable CAA MACT requirements:

(i) Industrial furnaces as defined in § 260.10 of this chapter;

(ii) Boilers, as defined in § 260.10 of this chapter, that are further defined as follows:

(A) Industrial boilers located on the site of a facility engaged in a manufacturing process where substances are transformed into new products, including the component parts of products, by mechanical or chemical processes; or

(B) Utility boilers used to produce electric power, steam, heated or cooled air, or other gases or fluids for sale;

(iii) Hazardous waste incinerators subject to regulation under subpart O of parts 264 or 265 of this chapter or applicable CAA MACT standards.

(3) *Blending to meet the viscosity specification.*—A hazardous waste blended to meet the viscosity specification shall:

(i) As generated and prior to any blending, manipulation, or processing meet the constituent and heating value specifications of paragraphs (a)(1)(i) and (a)(2) of this section;

(ii) Be blended at a facility that is subject to the applicable requirements of parts 264 and 265, or § 262.34 of this chapter; and

(iii) Not violate the dilution prohibition of paragraph (c)(6) of this chapter.

(4) *Treatment to meet the comparable fuel exclusion specifications.*—(i) A hazardous waste may be treated to meet the exclusion specifications of paragraphs (a)(1) and (2) of this section provided the treatment:

(A) Destroys or removes the constituent listed in the specification or raises the heating value by removing or destroying hazardous constituents or materials;

(B) Is performed at a facility that is subject to the applicable requirements of parts 264 and 265, or § 262.34 of this Chapter; and

(C) Does not violate the dilution prohibition of paragraph (c)(6) of this seciton.

(ii) Residuals resulting from the treatment of a hazardous waste listed in subpart D of this part to generate a comparable fuel remain a hazardous waste.

(5) *Generation of a syngas fuel.*—(i) A syngas fuel can be generated from the processing of hazardous wastes to meet the exclusion specifications of paragraph (b) of this section provided the processing:

(A) Destroys or removes the constituent listed in the specification or raises the heating value by removing or destroying constituents or materials;

(B) Is performed at a facility that is subject to the applicable requirements of parts 264 and 265, or § 262.34 of this chapter or is an exempt recycling unit pursuant to § 261.6(c) of this chapter; and

(C) Does not violate the dilution prohibition of paragraph (c)(6) of this chapter.

(ii) Residuals resulting from the treatment of a hazardous waste listed in subpart D of this part to generate a syngas fuel remain a hazardous waste.

(6) *Dilution prohibition for comparable and syngas fuels.*—No generator, transporter, handler, or owner or operator of a treatment, storage, or disposal facility shall in any way dilute a hazardous waste to meet the exclusion specifications of paragraph (a)(1)(i), (a)(2) or (b) of this section.

(7) *Waste analysis plans.* The generator of a comparable/syngas fuel shall develop and follow a written waste analysis plan which describes the procedures for sampling and analysis of the hazardous waste to be excluded. The waste analysis plan shall be developed in accordance with the applicable sections of the "Test Methods for Evaluating Solid Waste, Physical/Chemical Methods" (SW–846). The plan shall be followed and retained at the facility excluding the waste.

(i) At a minimum, the plan must specify:

(A) The parameters for which each hazardous waste will be analyzed and the rationale for the selection of those parameters;

(B) The test methods which will be used to test for these parameters;

(C) The sampling method which will be used to obtain a representative sample of the waste to be analyzed;

(D) The frequency with which the initial analysis of the waste will be reviewed or repeated to ensure that the analysis is accurate and up to date; and

(E) If process knowledge is used in the waste determination, any information prepared by the generator in making such determination.

(ii) The waste analysis plan shall also contain records of the following:

(A) The dates and times waste samples were obtained, and the dates the samples were analyzed;

(B) The names and qualifications of the person(s) who obtained the samples;

(C) A description of the temporal and spatial locations of the samples;

(D) The name and address of the laboratory facility at which analyses of the samples were performed;

(E) A description of the analytical methods used, including any clean-up and sample preparation methods;

(F) All quantitation limits achieved and all other quality control results for the analysis (including method blanks, duplicate analyses, matrix spikes, etc.), laboratory quality assurance data, and description of any deviations from analytical methods written in the plan or from any other activity written in the plan which occurred;

(G) All laboratory results demonstrating that the exclusion specifications have been met for the waste; and

(H) All laboratory documentation that support the analytical results, unless a contract between the claimant and the laboratory provides for the

documentation to be maintained by the laboratory for the period specified in paragraph (c)(11) of this section and also provides for the availability of the documentation to the claimant upon request.

(iii) Syngas fuel generators shall submit for approval, prior to performing sampling, analysis, or any management of a syngas fuel as an excluded waste, a waste analysis plan containing the elements of paragraph (c)(7)(i) of this section to the appropriate regulatory authority. The approval of waste analysis plans must be stated in writing and received by the facility prior to sampling and analysis to demonstrate the exclusion of a syngas. The approval of the waste analysis plan may contain such provisions and conditions as the regulatory authority deems appropriate.

(8) *Comparable fuel sampling and analysis.* (i) General. For each waste for which an exclusion is claimed, the generator of the hazardous waste must test for all the constituents on appendix VIII to this part, except those that the generator determines, based on testing or knowledge, should not be present in the waste. The generator is required to document the basis of each determination that a constituent should not be present. The generator may not determine that any of the following categories of constituents should not be present:

(A) A constituent that triggered the toxicity characteristic for the waste constituents that were the basis of the listing of the waste stream, or constituents for which there is a treatment standard for the waste code in 40 CFR 268.40;

(B) A constituent detected in previous analysis of the waste;

(C) Constituents introduced into the process that generates the waste; or

(D) Constituents that are byproducts or side reactions to the process that generates the waste.

Note to paragraph (c)(8): Any claim under this section must be valid and accurate for all hazardous constituents; a determination not to test for a hazardous constituent will not shield a generator from liability should that constituent later be found in the waste above the exclusion specifications.

(ii) For each waste for which the exclusion is claimed where the generator of the comparable/syngas fuel is not the original generator of the hazardous waste, the generator of the comparable/syngas fuel may not use process knowledge pursuant to paragraph (c)(8)(i) of this section and must test to determine that all of the constituent specifications of paragraphs (a)(2) and (b) of this section have been met.

(iii) The comparable/syngas fuel generator may use any reliable analytical method to demonstrate that no constituent of concern is present at concentrations above the specification levels. It is the responsibility of the generator to ensure that the sampling and analysis are unbiased, precise, and representative of the waste. For the waste to be eligible for exclusion, a generator must demonstrate that:

(A) Each constituent of concern is not present in the waste above the specification level at the 95% upper confidence limit around the mean; and

(B) The analysis could have detected the presence of the constituent at or below the specification level at the 95% upper confidence limit around the mean.

(iv) Nothing in this paragraph preempts, overrides or otherwise negates the provision in § 262.11 of this chapter, which requires any person who generates a solid waste to determine if that waste is a hazardous waste.

(v) In an enforcement action, the burden of proof to establish conformance with the exclusion specification shall be on the generator claiming the exclusion.

(vi) The generator must conduct sampling and analysis in accordance with their waste analysis plan developed under paragraph (c)(7) of this section.

(vii) Syngas fuel and comparable fuel that has not been blended in order to meet the kinematic viscosity specifications shall be analyzed as generated.

(viii) If a comparable fuel is blended in order to meet the kinematic viscosity specifications, the generator shall:

(A) Analyze the fuel as generated to ensure that it meets the constituent and heating value specifications; and

(B) After blending, analyze the fuel again to ensure that the blended fuel continues to meet all comparable/syngas fuel specifications.

(ix) Excluded comparable/syngas fuel must be re-tested, at a minimum, annually and must be retested after a process change that could change the chemical or physical properties of the waste.

(9) *Speculative accumulation.* Any persons handling a comparable/syngas fuel are subject to the speculative accumulation test under § 261.2(c)(4) of this chapter.

(10) *Records.* The generator must maintain records of the following information on-site:

(i) All information required to be submitted to the implementing authority as part of the notification of the claim:

(A) The owner/operator name, address, and RCRA facility ID number of the person claiming the exclusion;

(B) The applicable EPA Hazardous Waste Codes for each hazardous waste excluded as a fuel; and

(C) The certification signed by the person claiming the exclusion or his authorized representative.

(ii) A brief description of the process that generated the hazardous waste and process that generated the excluded fuel, if not the same;

(iii) An estimate of the average and maximum monthly and annual quantities of each waste claimed to be excluded;

(iv) Documentation for any claim that a constituent is not present in the hazardous waste as required under paragraph (c)(8)(i) of this section;

(v) The results of all analyses and all detection limits achieved as required under paragraph (c)(8) of this section;

(vi) If the excluded waste was generated through treatment or blending, documentation as required under paragraph (c)(3) or (4) of this section;

(vii) If the waste is to be shipped off-site, a certification from the burner as required under paragraph (c)(12) of this section;

(viii) A waste analysis plan and the results of the sampling and analysis that includes the following:

(A) The dates and times waste samples were obtained, and the dates the samples were analyzed;

(B) The names and qualifications of the person(s) who obtained the samples;

(C) A description of the temporal and spatial locations of the samples;

(D) The name and address of the laboratory facility at which analyses of the samples were performed;

(E) A description of the analytical methods used, including any clean-up and sample preparation methods;

(F) All quantitation limits achieved and all other quality control results for the analysis (including method blanks, duplicate analyses, matrix spikes, etc.), laboratory quality assurance data, and description of any deviations from analytical methods written in the plan or from any other activity written in the plan which occurred;

(G) All laboratory analytical results demonstrating that the exclusion specifications have been met for the waste; and

(H) All laboratory documentation that support the analytical results, unless a contract between the claimant and the laboratory provides for the documentation to be maintained by the laboratory for the period specified in paragraph (c)(11) of this section and also

provides for the availability of the documentation to the claimant upon request; and

(ix) If the generator ships comparable/syngas fuel off-site for burning, the generator must retain for each shipment the following information on-site:

(A) The name and address of the facility receiving the comparable/syngas fuel for burning;

(B) The quantity of comparable/syngas fuel shipped and delivered;

(C) The date of shipment or delivery;

(D) A cross-reference to the record of comparable/syngas fuel analysis or other information used to make the determination that the comparable/syngas fuel meets the specifications as required under paragraph (c)(8) of this section; and

(E) A one-time certification by the burner as required under paragraph (c)(12) of this section.

(11) *Records retention.* Records must be maintained for the period of three years. A generator must maintain a current waste analysis plan during that three year period.

(12) *Burner certification.* Prior to submitting a notification to the State and Regional Directors, a comparable/syngas fuel generator who intends to ship their fuel off-site for burning must obtain a one-time written, signed statement from the burner:

(i) Certifying that the comparable/syngas fuel will only be burned in an industrial furnace or boiler, utility boiler, or hazardous waste incinerator, as required under paragraph (c)(2) of this section;

(ii) Identifying the name and address of the units that will burn the comparable/syngas fuel; and

(iii) Certifying that the state in which the burner is located is authorized to exclude wastes as comparable/syngas fuel under the provisions of this section.

(13) *Ineligible waste codes.* Wastes that are listed because of presence of dioxins or furans, as set out in Appendix VII of this part, are not eligible for this exclusion, and any fuel produced from or otherwise containing these wastes remains a hazardous waste subject to full RCRA hazardous waste management requirements.

PART 270—EPA ADMINISTERED PERMIT PROGRAMS: THE HAZARDOUS WASTE PERMIT PROGRAM

1. The authority citation for part 270 continues to read as follows:

Authority: 42 U.S.C. 6905, 6912, 6924, 6925, 6927, 6939, and 6974.

Subpart D—Changes to Permits

2. Section 270.42 is amended by adding a new paragraph (j) to read as follows:

§ 270.42 Permit modification at the request of the permittee.

* * * * *

(j) *Combustion facility changes to meet part 63 MACT standards.* The following procedures apply to hazardous waste combustion facility permit modifications requested under Appendix I of this section, section L(9).

(1) Facility owners or operators must comply with the Notification of Intent to Comply (NIC) requirements of 40 CFR 63.1211 before a permit modification can be requested under this section.

(2) If the Director does not approve or deny the request within 90 days of receiving it, the request shall be deemed approved. The Director may, at his or her discretion, extend this 90 day deadline one time for up to 30 days by notifying the facility owner or operator.

3. In § 270.42 Appendix I is amended by adding entry L(9) to read as follows:

Appendix I to § 270.42—Classification of Permit Modification

Modification	Class
L. Incinerators, Boilers and Industrial Furnaces	[1] 1
* * * * * * *	
9. Technology Changes Needed to meet Standards under 40 CFR part 63 (Subpart EEE—National Emission Standards for Hazardous Air Pollutants From Hazardous Waste Combustors), provided the procedures of § 270.42(i) are followed	
* * * * * * *	

[1] Class 1 modifications requiring Agency prior approval.

* * * * *

Subpart G—Interim Status

4. Section 270.72 is amended by adding paragraph (b)(8) to read as follows:

§ 270.72 Changes during interim status.

* * * * *

(b) * * *

(8) Changes necessary to comply with standards under 40 CFR part 63, Subpart EEE—National Emission Standards for Hazardous Air Pollutants From Hazardous Waste Combustors.

[FR Doc. 98–15843 Filed 6–18–98; 8:45 am]

BILLING CODE 6560–50–P

into law on March 22, 1995. EPA must prepare a budgetary impact statement to accompany any proposed or final rule that includes a Federal mandate that may result in estimated annual costs to State, local, or tribal governments in the aggregate; or to private sector, of $100 million or more. Under section 205, EPA must select the most cost-effective and least burdensome alternative that achieves the objectives of the rule and is consistent with statutory requirements. Section 203 requires EPA to establish a plan for informing and advising any small governments that may be significantly or uniquely impacted by the rule.

EPA has determined that the approval action promulgated does not include a Federal mandate that may result in estimated annual costs of $100 million or more to either State, local, or tribal governments in the aggregate, or to the private sector. This Federal action approves pre-existing requirements under State or local law, and imposes no new requirements. Accordingly, no additional costs to State, local, or tribal governments, or to the private sector, result from this action.

G. Submission to Congress and the Comptroller General

The Congressional Review Act, 5 U.S.C. 801 *et seq.*, as added by the Small Business Regulatory Enforcement Fairness Act of 1996, generally provides that before a rule may take effect, the agency promulgating the rule must submit a rule report, which includes a copy of the rule, to each House of the Congress and to the Comptroller General of the United States. EPA will submit a report containing this rule and other required information to the U.S. Senate, the U.S. House of Representatives, and the Comptroller General of the United States prior to publication of the rule in the **Federal Register**. A major rule cannot take effect until 60 days after it is published in the **Federal Register**. This rule is not a "major" rule as defined by 5 U.S.C. 804(2).

H. National Technology Transfer and Advancement Act

Section 12 of the National Technology Transfer and Advancement Act (NTTAA) of 1995 requires Federal agencies to evaluate existing technical standards when developing a new regulation. To comply with NTTAA, EPA must consider and use "voluntary consensus standards" (VCS) if available and applicable when developing programs and policies unless doing so would be inconsistent with applicable law or otherwise impractical.

The EPA believes that VCS are inapplicable to this action. Today's action does not require the public to perform activities conducive to the use of VCS.

I. Petitions for Judicial Review

Under section 307(b)(1) of the Clean Air Act, petitions for judicial review of this action must be filed in the United States Court of Appeals for the appropriate circuit by January 18, 2000. Filing a petition for reconsideration by the Administrator of this final rule does not affect the finality of this rule for the purposes of judicial review nor does it extend the time within which a petition for judicial review may be filed, and shall not postpone the effectiveness of such rule or action. This action may not be challenged later in proceedings to enforce its requirements. (See section 307(b)(2).)

List of Subjects in 40 CFR Part 52

Environmental protection, Air pollution control, Incorporation by reference, Intergovernmental relations, Reporting and recordkeeping requirements.

Dated: October 13, 1999

Jack W. McGraw,

Acting Regional Administrator, Region VIII.

Chapter I, title 40, parts 52 and 81 of the Code of Federal Regulations are amended as follows:

PART 52—[AMENDED]

1. The authority citation for part 52 continues to read as follows:

Authority: 42 U.S.C. 7401 *et seq.*

Subpart G—Colorado

2. Section 52.320 is amended by adding paragraph (c)(85) to read as follows:

§ 52.320 Identification of plan.

* * * * *

(c) * * *

(85) On September 16, 1997, the Governor of Colorado submitted revisions to Regulation No. 10 "Criteria for Analysis of Conformity" that incorporate the General Conformity requirements of 40 CFR part 51, Subpart W into State regulation.

(i) Incorporation by reference.

(A) Regulation No. 10 "Criteria for Analysis of Conformity", 5 CCR 1001-12, as adopted on October 17, 1996, effective December 30, 1996.

Subpart TT—Utah

3. Section 52.2320 is amended by adding paragraph (c)(42) to read as follows:

§ 52.2320 Identification of plan.

* * * * *

(c) * * *

(42) On February 12, 1996, the Governor of Utah submitted revisions submitted revisions to the SIP that incorporate the General Conformity requirements of 40 CFR part 93, subpart B into the SIP and State regulation.

(i) Incorporation by reference.

(A) UACR R307-2-30, Section XXII, General Conformity, as adopted on October 4, 1995, effective October 12, 1995.

(B) UACR R307-19, General Conformity, as adopted on October 4, 1995, effective October 12, 1995.

Subpart ZZ—Wyoming

4. Section 52.2620 is amended by adding paragraph (c)(28) to read as follows:

§ 52.2620 Identification of plan.

* * * * *

(c) * * *

(28) On March 14, 1995, the Governor of Wyoming submitted revisions to the SIP that incorporate the General Conformity requirements of 40 CFR part 93, Subpart B into State regulation.

(i) Incorporation by reference.

(A) Section 32 of the Wyoming Air Quality Standards, "Conformity of General Federal Actions to State Implementation Plans," effective February 13, 1995.

[FR Doc. 99-30232 Filed 11-18-99; 8:45 am]

BILLING CODE 6560-50-U

ENVIRONMENTAL PROTECTION AGENCY

40 CFR Parts 63, 261, and 266

[FRL-6477-9]

RIN 2050-AE01

NESHAPS: Final Standards for Hazardous Air Pollutants for Hazardous Waste Combustors

AGENCY: Environmental Protection Agency (EPA).

ACTION: Final rule; technical correction.

SUMMARY: On June 19, 1998, EPA published the Revised Standards for Hazardous Waste Combustors Final Rule and on September 30, 1999 published the Hazardous Waste Combustors NESHAP Final Rule. In today's action we are clarifying our intention associated with the Notification of Intent to Comply and Progress Report requirements of the 1998 rule. Additionally, we are correcting a typographical error in the

comparable fuels specification table and an omission pertaining to residue testing requirements in the 1999 final rule.

EFFECTIVE DATE: This rule is effective on November 19, 1999.

ADDRESSES: The public may obtain a copy of this technical correction at the RCRA Information Center (RIC), located at Crystal Gateway One, 1235 Jefferson Davis Highway, First Floor, Arlington, Virginia.

FOR FURTHER INFORMATION CONTACT: For general information, contact the RCRA Hotline at (800) 424-9346 (toll free) or (703) 920-9810 in the Washington, DC metropolitan area. For information on this rule pertaining to the notification requirements, contact David Hockey (5302W), Office of Solid Waste, 401 M Street, SW, Washington, DC 20460, (703) 308-8846, e-mail address is "hockey.david@epa.gov." For information pertaining to the residue requirements, contact Larry Gonzalez (5302W), Office of Solid Waste, 401 M Street, SW, Washington, DC 20460, (703) 308-8468, e-mail address is "gonzalez.larry@epa.gov."

SUPPLEMENTARY INFORMATION

I. Reasons and Basis for Today's Action

The June 1998 Revised Standards for Hazardous Waste Combustors rule (June 19, 1998, 63 FR 33782) includes a requirement that sources submit progress reports to support declarations made in the source's Notification of Intent to Comply (63 FR at 33820). We are amending two of these requirement in today's action to make our original intent more clear. The third amendment is to the September 1999 rule and it involves a typographical error in the comparable fuels specification table revised at 64 FR 53076 which we are correcting today.

The fourth amendment we are correcting is an inadvertent omission pertaining to residue testing requirements for devices burning hazardous waste fuels while processing Bevill amendment raw materials. In the final rule setting standards for hazardous waste combustors (Sept. 30, 1999, 64 FR at 53076), we modified a number of provisions found in 40 CFR parts 264, 265, and 266. In the revisions to 40 CFR 266.112, we inadvertently omitted a note to the Appendix VIII table to Part 266 that limits the requirement for testing to only those compounds that have a nonwastewater concentration limit under the F039 waste code for leachates found at 40 CFR 268.40.

II. Corrections to the June 19, 1998 Final Rule

A. Notification of Intent To Comply

Today's changes to 40 CFR 63.1210 clarify that only those elements enumerated in § 63.1210(b)(1)(ii) which actually apply to the particular source must be addressed by the source in its notice of intent to comply. It was not EPA's intent to require sources to spend time submitting information, or addressing issues, of no applicability to their actual situation. Since some of the elements that are required to be submitted may not be necessary for every source in coming into compliance, this technical amendment clarifies that the elements of paragraph (b)(1)(ii) are only applicable to a source if necessary to bring that source into compliance. A source itself makes this determination based upon its own particular situation.

B. Progress Reports

The changes to § 63.1211 of the progress report requirements clarify our original intent with respect to the documentation of progress towards compliance. In paragraph (b)(i), we require sources to demonstrate their progress via three elements: (i) Development of engineering designs for physical modifications; (ii) submittal of applicable construction applications; and (iii) a commitment of resources. As currently expressed, element (iii) requires the source to enter into "binding contractual commitments" to purchase, build and install needed equipment. Section 63.1211(b)(1) (as promulgated at 63 FR 33820 (June 19, 1998)). Sources have since voiced concern with the "contractual" element because it can be read to imply that upgrading requires arrangements to be made with entities other than the source itself. This was not EPA's intent, nor would such a restriction make environmental sense since there is no inherent problem with a source performing its own upgrading if it is able to do so. Some sources thus will not have to enter into contracts with other entities, but will be able to use in-house personnel or existing agreements to purchase, fabricate, and install any equipment needed to comply with the emission standards. Therefore, we are better describing our intent by amending the language of the "contractual" element to more broadly include these other situations. This change merely restates the language of element (iii) while continuing to meet our original intent for the demonstration of progress, as discussed in the preamble language in the June 19, 1999 **Federal Register** (63 FR at 33810). This section also makes the necessary conforming changes to the rest of paragraph (b).

III. Corrections to the September 30, 1999 Final Rule

A. Comparable Fuels Specification Table

In the September 30, 1999 (64 FR 53076) final rule, we corrected several of the exemption specifications contained in Table 1 to section 261.38—Detection and Detection Limit Values for Comparable Fuel Specification. A typographical error occurred during printing which misprinted the Antimony specification by incorrectly inserting the standard for Arsenic which appears below Antimony in the table. The correct value for the Antimony specification should be a concentration limit of 12 mg/kg at 10,000 BTU/lb. Today's rule corrects this typographical error.

B. Regulation of Residues

In the September 30, 1999 (64 FR 53076) final rule, the Agency revised the requirements governing the classification of residues from certain industrial furnaces that burn hazardous waste-derived fuels. Specifically, the existing provisions at § 266.112 create an objective test to determine whether residues from these devices have been "significantly affected" by their hazardous waste combustion activities. Residues that have been "significantly affected" are no longer eligible for Bevill exempt status, and so are subject to subtitle C regulation. The "significantly affected" determination requires certain types of testing to determine hazardous constituent concentration levels in the wastes generated by the industrial furnace. We amended part of that testing requirement in the September 30, 1999 final rule, and are correcting those amendments in this notice.

The 1999 revisions require hazardous waste combustion sources regulated under the BIF Rule (40 CFR 266, Subpart H) to test their residues for all of the compounds specified in the Appendix VIII table to Part 266, and to verify that their residues do not exceed the F039 nonwastewater concentration limits to retain their Bevill exempt status (64 FR at 53076). We also revised the list of compounds to be tested by including specific dioxin compounds on the table (64 FR 53076). However, in revising the residue testing requirements, we inadvertently failed to include a provision that allows sources not to analyze for those compounds on the table that lack F039 nonwastewater concentration limits. This omission is

contrary to preamble language of the 1999 final rule. For example at 64 FR 52995, we state that the revised § 266.112 (b)(2) measurement requirements apply only to discreet homologues of dioxin compounds (tetra, penta, and hexa-homologues) because these homologues are the only ones with established F039 concentration limits. Following promulgation of the September 1999 final rule, we determined that nine additional compounds on the table do not have F039 nonwastewater concentration limits. These compounds were included in the table because the F039 list may be revised in the future to include concentration limits for them, and, if it is, we want sources to analyze their combustion residues for them. However, without a current F039 concentration limit, analysis of these compounds in combustion residues would be futile because they do not have established concentration limits against which to measure the testing results.

The following nine compounds on the Appendix VIII to Part 266 table entitled "Organic Compounds for Which Residues Must Be Analyzed" do not have F039 nonwastewater concentration limits: cis-1,4-Dichloro-2-butene; Bromochloromethane; Bromoform; Bromomethane; Methylene bromide; 2,4,6-Trichlorophenol; o-Nitrophenol; o-Chlorophenol; and, 2,6-Toluene diisocyanate. Today's rule amends the table by including a note to the table that states testing is required for only those organic compounds for which an F039 nonwastewater concentration limit is identified.

IV. Administrative Requirements

Under Executive Order 12866 (58 FR 51735, October 4, 1993), this action is not a "significant regulatory action" and is therefore not subject to review by the Office of Management and Budget. Because the agency has made a "good cause" finding that this action is not subject to notice-and-comment requirements under the Administrative Procedure Act or any other statute, see section VI below, it is not subject to the regulatory flexibility provisions of the Regulatory Flexibility Act (5 U.S.C. 601 *et seq.*), or to sections 202 and 205 of the Unfunded Mandates Reform Act of 1995 (UMRA) (Public Law 104–4). In addition, this action does not significantly or uniquely affect small governments or impose a significant intergovernmental mandate, as described in sections 203 and 204 of UMRA. This rule also does not significantly or uniquely affect the communities of tribal governments, as specified by Executive Order 13084 (63 FR 27655, May 10, 1998). This rule will not have substantial direct effects on the States, on the relationship between the national government and the States, or on the distribution of power and responsibilities among the various levels of government, as specified in Executive Order 13132 (64 FR 43255, August 10, 1999). This rule also is not subject to Executive Order 13045 (62 FR 19885, April 23, 1997), because it is not economically significant.

This technical correction action does not involve technical standards; thus, the requirements of section 12(d) of the National Technology Transfer and Advancement Act of 1995 (15 U.S.C. 272 note) do not apply. The rule also does not involve special consideration of environmental justice related issues as required by Executive Order 12898 (59 FR 7629, February 16, 1994). In issuing this rule, EPA has taken the necessary steps to eliminate drafting errors and ambiguity, minimize potential litigation, and provide a clear legal standard for affected conduct, as required by section 3 of Executive Order 12988 (61 FR 4729, February 7, 1996). EPA has complied with Executive Order 12630 (53 FR 8859, March 15, 1988) by examining the takings implications of the rule in accordance with the "Attorney General's Supplemental Guidelines for the Evaluation of Risk and Avoidance of Unanticipated Takings" issued under the executive order. This rule does not impose an information collection burden under the provisions of the Paperwork Reduction Act of 1995 (44 U.S.C. 3501 *et seq.*). EPA's compliance with these statutes and Executive Orders for the underlying rule is discussed in the June 19, 1998 **Federal Register** notice.

V. Congressional Review Act

The Congressional Review Act, 5 U.S.C. 801 *et seq.*, as added by the Small Business Regulatory Enforcement Fairness Act of 1996, generally provides that before a rule may take effect, the agency promulgating the rule must submit a rule report, which includes a copy of the rule, to each House of the Congress and to the Comptroller General of the United States. Section 808 allows the issuing agency to make a good cause finding that notice and public procedure is impracticable, unnecessary or contrary to the public interest. This determination must be supported by a brief statement. 5 U.S.C. 808(2). As stated previously, EPA has made such a good cause finding, including the reasons therefor, and established an effective date of November 19, 1999. EPA will submit a report containing this rule and other required information to the U.S. Senate, the U.S. House of Representatives, and the Comptroller General of the United States prior to publication of the rule in the **Federal Register**. This action is not a "major rule" as defined by 5 U.S.C. 804(2).

VI. Immediate Effective Date

EPA is making this rule effective immediately. The rule adopts amendments which are purely technical in that they correct mistakes which are clearly inconsistent with the Agency's stated intent. Comment on such changes is unnecessary within the meaning of 5 U.S.C. 553(b)(3)(B). For the same reasons, there is good cause to make the rule effective immediately pursuant to 5 U.S.C. 553(d)(3).

List of Subjects

40 CFR Part 63

Environmental protection, Air pollution control, Hazardous substances, Reporting and recordkeeping requirements.

40 CFR Part 261

Hazardous waste, Recycling, Recordkeeping and reporting.

40 CFR Part 266

Environmental protection, Energy, Hazardous waste, Recycling, Reporting and recordkeeping requirements.

Dated: November 15, 1999.

Michael Shapiro,

Principal Deputy Assistant Administrator.

For the reasons set forth in the preamble, title 40, chapter I of the Code of Federal Regulations is amended as follows:

PART 63—NATIONAL EMISSION STANDARDS FOR HAZARDOUS AIR POLLUTANTS FOR SOURCE CATEGORIES

1. The authority citation for part 63 continues to read as follows:

Authority: 42 U.S.C. 7401 *et seq.*

Subpart EEE—National Emission Standards for Hazardous Air Pollutants From Hazardous Waste Combustors

2. Section 63.1210 is amended by revising paragraph (b)(1)(ii) introductory text, (b)(1)(ii)(A), (b)(1)(ii)(B) and (b)(1)(iv) introductory text to read as follows:

§ 63.1210 What are the notification requirements?

* * * * *

(b) * * *

(1) * * *

(ii) As applicable to each source, information on key activities and

estimated dates for these activities that will bring the source into compliance with emission control requirements of this subpart. The submission of key activities and dates is not intended to be static and you may revise them during the period the NIC is in effect. You must submit revisions to the Administrator and make them available to the public. You must include the following key activities and dates:

(A) The dates by which you will develop engineering designs for emission control systems or process changes for emissions;

(B) The date by which you will commit internal or external resources for installing emission control systems or making process changes for emission control, or the date by which you will issue orders for the purchase of component parts to accomplish emission control or process changes.

* * * * *

(iv) If you intend to comply, but will not stop burning hazardous waste by October 1, 2001 a certification that:

* * * * *

3. Section 63.1211 is amended by revising paragraph (b) to read as follows:

§ 63.1211 What are the recordkeeping and reporting requirements?

* * * * *

(b) *Compliance progress reports associated with the notification of intent to comply.* (1) *General.* If you intend to comply with the emission standards and operating requirements of this subpart, then not later than October 1, 2001, you must comply with the following, unless you comply with paragraph (b)(2)(ii) of this section:

(i) Develop engineering design for any physical modifications to the source needed to comply with the emission standards of this subpart;

(ii) Submit applicable construction applications to the Administrator; and

(iii) Document an internal or external commitment of resources, i.e. funds or personnel, to purchase, fabricate, and install any equipment, devices, and ancillary structures needed to comply with the emission standards and operating requirements of this subpart.

(2) *Progress Report.* (i) You must submit to the Administrator a progress report on or before October 1, 2001 which contains information documenting that you have met the requirements of paragraph (b)(1) of this section. This information will be used by the Administrator to determine if you have made adequate progress towards compliance with the emission standards of this subpart. In any evaluation of adequate progress, the Administrator may consider any delays in a source's progress caused by the time required to obtain necessary permits from governmental regulatory agencies when the sources have submitted timely and complete permit applications.

(ii) If you intend to comply with the emission standards and operating requirements of this subpart, but can do so without undertaking any of the activities described in paragraph (b)(1) of this section, you must submit a progress report documenting either:

(A) That you, at the time of the progress report, are in compliance with the emission standards and operating requirements; or

(B) The steps you will take to comply, without undertaking any of the activities listed in paragraphs (b)(1)(i) through (b)(1)(iii) of this section.

(iii) If you do not comply with paragraphs (b)(1) or (b)(2)(ii) of this section, you must stop burning hazardous waste on or before October 1, 2001.

(3) *Schedule.* (i) You must include in the progress report a detailed schedule that lists key dates for all projects that will bring the source into compliance with the emission standards and operating requirements of this subpart for the time period between submission of the progress report and the compliance date of the emission standards and operating requirements of this subpart.

(ii) The schedule must contain anticipated or actual dates for the following:

(A) Bid and award dates, as necessary, for construction contracts and equipment supply contractors;

(B) Milestones such as ground breaking, completion of drawings and specifications, equipment deliveries, intermediate construction completions, and testing;

(C) The dates on which applications will be, submitted for operating permits or licenses;

(D) The dates by which approvals of any permits or licenses are anticipated; and

(E) The projected date by which you expect to comply with the emission standards and operating requirements of this subpart.

(4) *Notice of intent to comply.* You must include a statement in the progress report that you intend or do not intend to comply with the emission standards and operating requirements of this subpart.

(5) *Sources that do not intend to comply.* (i) If you indicated in your NIC your intent not to comply with the emission standards and operating requirements of this subpart and stop burning hazardous waste prior to submitting a progress report, or if you meet the requirements of § 63.1206(a)(2), you are exempt from the requirements of paragraphs (b)(1) through (b)(4) of this section. However, you must submit and include in a revised NIC the date on which you stopped burning hazardous waste and the date(s) you submitted, or plan to submit RCRA closure documents.

(ii) If you signify in the progress report, submitted not later than October 1, 2001, your intention not to comply with the emission standards and operating requirements of this subpart, you must stop burning hazardous waste on or before October 1, 2001 and you are exempt from the requirements of paragraphs (b)(1) through (b)(3) of this section.

* * * * *

PART 261—IDENTIFICATION AND LISTING OF HAZARDOUS WASTE

1. The authority citation of part 261 continues to read as follows:

Authority: 42 U.S.C. 6905, 6912(a), 6921, 6922, 6924(y), and 6938.

2. In § 261.38 Table 1 is amended by revising the entry for "Antimony, total" under the heading Metals to read as follows:

§ 261.38 Comparable/Syngas Fuel Exclusion.

* * * * *

TABLE 1 TO § 261.38 DETECTION AND DETECTION LIMIT VALUES FOR COMPARABLE FUEL SPECIFICATION

Chemical name	CAS No.	Composite value (mg/kg)	Heating value (BTU/lb)	Concentration limit (mg/kg at 10,000 BTU/lb)	Minimum required detection limit (mg/kg)
* * *	*	*		*	*
Metals:					
Antimony, total	7440-36-0	ND		12	
* * *	*	*		*	*

* * * * *

PART 266—STANDARDS FOR THE MANAGEMENT OF SPECIFIC HAZARDOUS WASTES AND HAZARDOUS WASTE MANAGEMENT FACILITIES

1. The authority citation for Part 266 continues to read as follows:

Authority: Secs. 1006, 2002(a), 3004, 6905, 6906, 6912, 6922, 6924, 6925, and 6937.

2. The Appendix VIII table to Part 266 is amended by adding the note after the table to read as follows:

Appendix VIII Table to Part 266—Organic Compounds for Which Residues Must Be Analyzed

* * * * *

Note to the table: Analysis is not required for those compounds that do not have an established F039 nonwastewater concentration limit.

[FR Doc. 99-30235 Filed 11-18-99; 8:45 am]

BILLING CODE 6560-50-P

DEPARTMENT OF TRANSPORTATION

Coast Guard

46 CFR Parts 10 and 15

[USCG-1999-6224]

RIN 2115-AF23

Licensing and Manning for Officers of Towing Vessels

AGENCY: Coast Guard, DOT.

ACTION: Interim rule with request for comments.

SUMMARY: The Coast Guard establishes requirements for licensing mariners who operate towing vessels, whether inspected or uninspected. This interim rule creates new licenses with levels of qualification and with enhanced training and operating experience, including practical demonstrations of skill; it also ensures that all towing vessels will be manned by officers holding licenses specifically authorizing their service. It should improve navigational safety for towing vessels. Please note that the interim rule is identified by a new docket number, because the docket for this rulemaking has been transferred to the Department of Transportation docket which can be reviewed on the Internet. To comment on the interim rule, follow the procedures described in the **ADDRESSES** section.

DATES: This interim rule is effective November 20, 2000. Comments and related material must reach the Docket Management Facility on or before February 17, 2000. Comments sent to the Office of Management and Budget (OMB) on collection of information (OMB Control No. 2115-0623) must reach OMB on or before January 18, 2000.

ADDRESSES: To make sure your comments and related material are not entered more than once in the docket, please submit them by only one of the following means:

(1) By mail to the Docket Management Facility (USCG-1999-6224), U.S. Department of Transportation, room PL-401, 400 Seventh Street SW., Washington, DC 20590-0001.

(2) By hand delivery to room PL-401 on the Plaza level of the Nassif Building, 400 Seventh Street SW., Washington, DC, between 9 a.m. and 5 p.m., Monday through Friday, except Federal holidays. The telephone number is 202-366-9329.

(3) By fax to the Docket Management Facility at 202-493-2251.

(4) Electronically through the Web Site for the Docket Management System at http://dms.dot.gov.

You must also mail comments on collection of information to the Office of Information and Regulatory Affairs, Office of Management and Budget, 725 17th Street NW., Washington, DC 20503, ATTN: Desk Officer, U.S. Coast Guard.

The Docket Management Facility maintains the public docket for this rulemaking. Comments and material received from the public, as well as documents mentioned in this preamble as being available in the docket, will become part of this docket and will be available for inspection or copying at room PL-401 on the Plaza level of the Nassif Building, 400 Seventh Street SW., Washington, DC, between 9 a.m. and 5 p.m., Monday through Friday, except Federal holidays. You may also find this docket on the Internet at http://dms.dot.gov.

FOR FURTHER INFORMATION CONTACT: For questions on this rule, contact Lieutenant Commander Luke Harden, Office of Operating and Environmental Standards (G-MSO), 202-267-0229; e-mail LHarden@comdt.uscg.mil. For questions on viewing or submitting material to the docket, call Dorothy Walker, Chief, Dockets, Department of Transportation, telephone 202-366-9329.

SUPPLEMENTARY INFORMATION:

Request for Comments

We encourage you to participate in this rulemaking by submitting comments and related material. If you do so, please include your name and address, identify the docket number for this rulemaking [USCG-1999-6224], indicate the specific section of this document to which each comment applies, and give the reason for each comment. You may submit your comments and material by mail, delivery, fax, or electronic means to the Docket Management Facility at the address under **ADDRESSES**; but please submit your comments and material by only one means. If you submit them by mail or hand delivery, submit them in an unbound format, no larger than 8½ by 11 inches, suitable for copying and electronic filing. If you submit them by mail and would like to know they reached the Facility, please enclose a stamped, self-addressed postcard or envelope. We will consider all comments and material received during the comment period. We may change this rule in view of them.

Public Meeting

We do not now plan to hold a public meeting. But you may submit a request

federal register

Thursday
September 30, 1999

Part II

Environmental Protection Agency

40 CFR Part 60, et al.

NESHAPS: Final Standards for Hazardous Air Pollutants for Hazardous Waste Combustors; Final Rule

ENVIRONMENTAL PROTECTION AGENCY

40 CFR Parts 60, 63, 260, 261, 264, 265, 266, 270, and 271

[FRL–6413–3]

RIN 2050–AEO1

NESHAPS: Final Standards for Hazardous Air Pollutants for Hazardous Waste Combustors

ACTION: Final rule.

SUMMARY: We are promulgating revised standards for hazardous waste incinerators, hazardous waste burning cement kilns, and hazardous waste burning lightweight aggregate kilns. These standards are being promulgated under joint authority of the Clean Air Act (CAA) and Resource Conservation and Recovery Act (RCRA). The standards limit emissions of chlorinated dioxins and furans, other toxic organic compounds, toxic metals, hydrochloric acid, chlorine gas, and particulate matter. These standards reflect the performance of Maximum Achievable Control Technologies (MACT) as specified by the Clean Air Act. These MACT standards also will result in increased protection to human health and the environment over existing RCRA standards.

DATES: This final rule is in effect on September 30, 1999. You are required to be in compliance with these promulgated standards 3 years following the effective date of the final rule (i.e., September 30, 2002). You are provided with the possibility of a site-specific one year extension for the installation of controls to comply with the final standards or for waste minimization reductions. The incorporation by reference of certain publications listed in the rule was approved by the Director of the Federal Register as of September 30, 1999.

ADDRESSES: The official record (*i.e.*, public docket) for this rulemaking is identified as Docket Numbers: F–96–RCSP–FFFFF, F–97–CS2A–FFFFF, F–97–CS3A–FFFFF, F–97–CS4A–FFFFF, F–97–CS5A–FFFFF, F–97–CS6A–FFFFF, F–98–RCSF–FFFFF, and F–1999–RC2F–FFFFF. The official record is located in the RCRA Information Center (RIC), located at Crystal Gateway One, 1235 Jefferson Davis Highway, First Floor, Arlington, Virginia. The mailing address for the official record is RCRA Information Center, Office of Solid Waste (5305W), U.S. Environmental Protection Agency Headquarters, 401 M Street, SW, Washington, DC 20460.

Public comments and supporting materials are available for viewing in the RIC. The RIC is open from 9 a.m. to 4 p.m., Monday through Friday, excluding federal holidays. To review docket materials, you must make an appointment by calling 703–603–9230 or by sending a message via e-mail to: RCRA-Docket@epamail.epa.gov. You may copy a maximum of 100 pages from any regulatory docket at no charge. Additional copies cost 15 cent/page. The index for the official record and some supporting materials are available electronically. See the "Supplementary Information" section of this **Federal Register** notice for information on accessing the index and these supporting materials.

FOR FURTHER INFORMATION CONTACT: For general information, you can contact the RCRA Hotline at 1–800–424–9346 or TDD 1–800–553–7672 (hearing impaired). In the Washington metropolitan area, call 703–412–9810 or TDD 703–412–3323. For additional information on the Hazardous Waste Combustion MACT rulemaking and to access available electronic documents, please go to our Web page: www.epa.gov/hwcmact. Any questions or comments on this rule can also be sent to EPA via our Web page.

For more detailed information on technical requirements of this rulemaking, you can contact Mr. David Hockey, 703–308–8846, electronic mail: Hockey.David@epamail.epa.gov. For more detailed information on permitting associated with this rulemaking, you can contact Ms. Patricia Buzzell, 703–308–8632, electronic mail: Buzzell.Tricia@epamail.epa.gov. For more detailed information on compliance issues associated with this rulemaking, you can contact Mr. Larry Gonzalez, 703–308–8468, electronic mail: Gonzalez.Larry@epamail.epa.gov. For more detailed information on the assessment of potential costs, benefits and other impacts associated with this rulemaking, you can contact Mr. Lyn Luben, 703–308–0508, electronic mail: Luben.Lyn@epamail.epa.gov. For more detailed information on risk analyses associated with this rulemaking, you can contact Mr. David Layland, 703–308–0482, electronic mail: Layland.David@epamail.epa.gov.

SUPPLEMENTARY INFORMATION:

Official Record. The official record is the paper record maintained at the address in **ADDRESSES** above. All comments that were received electronically were converted into paper form and placed in the official record, which also includes all comments submitted directly in writing. Our responses to comments, whether the comments are written or electronic, are located in the response to comments document in the official record for this rulemaking.

Supporting Materials Availability on the Internet. The index for the official record and the following supporting materials are available on the Internet as:

—Technical Support Documents for HWC MACT Standards:
  —Volume I: Description of Source Categories
  —Volume II: HWC Emissions Database
  —Volume III: Selection of MACT Standards and Technologies
  —Volume IV: Compliance with the MACT Standards
  —Volume V: Emission Estimates and Engineering Costs
—Assessment of the Potential Costs, Benefits and Other Impacts of the Hazardous Waste Combustion MACT Standards—Final Rule
—Risk Assessment Support to the Development of Technical Standards for Emissions from Combustion Units Burning Hazardous Wastes: Background Information Document
—Response to Comments for the HWC MACT Standards Document

To access the information electronically from the World Wide Web (WWW), type: *www.epa.gov/hwcmact*

Outline

Acronyms Used in the Rule

acfm—Actual cubic feet per minute
BIF—Boilers and industrial furnaces
CAA—Clean Air Act
CEMS—Continuous emissions monitors/monitoring system
CFR—Code of Federal Regulations
DOC—Documentation of Compliance
DRE—Destruction and Removal Efficiency
dscf—Dry standard cubic foot
dscm—Dry standard cubic meter
EPA/USEPA—United States Environmental Protection Agency
gr—Grains
HSWA—Hazardous and Solid Waste Amendments
kg—Kilogram
MACT—Maximum Achievable Control Technology
mg—Milligrams
Mg—Megagrams (metric tons)
NOC—Notification of Compliance
NESHAP—National Emission Standards for HAPs
ng—Nanograms
NODA—Notice of Data Availability
NPRM—Notice of Proposed Rulemaking
POHC—Principal Organic Hazardous Constituent

ppmv—Parts per million by volume
ppmw—Parts per million by weight
RCRA—Resource Conservation and Recovery Act
R & D—Research and Development
SSRA—Site specific risk assessment
TEQ—Toxicity equivalence
µg—Micrograms

Outline

Part One: Overview and Background for This Rule
I. What Is the Purpose of This Rule?
II. In Brief, What Are the Major Features of Today's Rule?
A. Which Source Categories Are Affected By This Rule?
B. How Are Area Sources Affected By This Rule?
C. What Emission Standards Are Established In This Rule?
D. What Are the Procedures for Complying with This Rule?
E. What Subsequent Performance Testing Must Be Performed?
F. What Is the Time Line for Complying with This Rule?
G. How Does This Rule Coordinate With the Existing RCRA Regulatory Program?
III. What Is the Basis of Today's Rule?
IV. What Was the Rulemaking Process for Development of This Rule?
Part Two: Which Devices Are Subject to Regulation?
I. Hazardous Waste Incinerators
II. Hazardous Waste Burning Cement Kilns
III. Hazardous Waste Burning Lightweight Aggregate Kilns
Part Three: How Were the National Emission Standards for Hazardous Air Pollutants (NESHAP) in This Rule Determined?
I. What Authority Does EPA Have to Develop a NESHAP?
II. What Are the Procedures and Criteria for Development of NESHAPs?
A. Why Are NESHAPs Needed?
B. What Is a MACT Floor?
C. How Are NESHAPs Developed?
III. How Are Area Sources and Research, Development, and Demonstration Sources Treated in this Rule?
A. Positive Area Source Finding for Hazardous Waste Combustors
1. How Are Area Sources Treated in this Rule?
2. What Is an Area Source?
3. What Is the Basis for Today's Positive Area Source Finding?
B. How Are Research, Development, and Demonstration (RD&D) Sources Treated in this Rule?
1. Why Does the CAA Give Special Consideration to Research and Development (R&D) Sources?
2. When Did EPA Notice Its Intent to List R&D Facilities?
3. What Requirements Apply to Research, Development, and Demonstration Hazardous Waste Combustor Sources?
IV. How Is RCRA's Site-Specific Risk Assessment Decision Process Impacted by this Rule?
A. What Is the RCRA Omnibus Authority?
B. How Will the SSRA Policy Be Applied and Implemented in Light of this Mandate?
1. Is There a Continuing Need for Site-Specific Risk Assessments?
2. How Will the SSRA Policy Be Implemented?
C. What Is the Difference Between the RCRA SSRA Policy and the CAA Residual Risk Requirement?
Part Four: What Is The Rationale for Today's Final Standards?
I. Emissions Data and Information Data Base
A. How Did We Develop the Data Base for this Rule?
B. How Are Data Quality and Data Handling Issues Addressed?
1. How Are Data from Sources No Longer Burning Hazardous Waste Handled?
2. How Are Nondetect Data Handled?
3. How Are Normal Versus Worst-Case Emissions Data Handled?
4. What Approach Was Used to Fill In Missing or Unavailable Data?
II. How Did We Select the Pollutants Regulated by This Rule?
A. Which Toxic Metals Are Regulated by This Rule?
1. Semivolatile and Low Volatile Metals
2. How Are the Five Other Metal Hazardous Air Pollutants Regulated?
B. How Are Toxic Organic Compounds Regulated By This Rule?
1. Dioxins/Furans
2. Carbon Monoxide and Hydrocarbons
3. Destruction and Removal Efficiency
C. How Are Hydrochloric Acid and Chlorine Gas Regulated By This Rule?
III. How Are the Standards Formatted In This Rule?
A. What Are the Units of the Standards?
B. Why Are the Standards Corrected for Oxygen and Temperature?
C. How Does the Rule Treat Significant Figures and Rounding?
IV. How Are Nondioxin/Furan Organic Hazardous Air Pollutants Controlled?
A. What Is the Rationale for DRE as a MACT Standard?
1. MACT DRE Standard
2. How Can Previous Successful Demonstrations of DRE Be Used To Demonstrate Compliance?
3. DRE for Sources that Feed Waste at Locations Other Than the Flame Zone
4. Sources that Feed Dioxin Wastes
B. What Is the Rationale for Carbon Monoxide or Hydrocarbon Standards as Surrogate Control of Organic Hazardous Air Pollutants?
V. What Methodology Is Used to Identify MACT Floors?
A. What Is the CAA Statutory Requirement to Identify MACT Floors?
B. What Is the Final Rule Floor Methodology?
1. What Is the General Approach Used in this Final Rule?
2. What MACT Floor Approach Is Used for Each Standard?
C. What Other Floor Methodologies Were Considered?
1. April 19, 1996 Proposal
2. May 1997 NODA.
D. How Is Emissions Variability Accounted for in Development of Standards?
1. How Is Within-Test Condition Emissions Variability Addressed?
2. How Is Waste Imprecision in the Stack Test Method Addressed?
3. How Is Source-to-Source Emissions Variability Addressed?
VI. What Are the Standards for Existing and New Incinerators?
A. To Which Incinerators Do Today's Standards Apply?
B. What Subcategorization Options Did We Evaluate?
C. What Are the Standards for New and Existing Incinerators?
1. What Are the Standards for Incinerators?
2. What Are the Standards for Dioxins and Furans?
3. What Are the Standards for Mercury?
4. What Are the Standards for Particulate Matter?
5. What Are the Standards for Semivolatile Metals?
6. What Are the Standards for Low Volatile Metals?
7. What Are the Standards for Hydrochloric Acid and Chlorine Gas?
8. What Are the Standards for Carbon Monoxide?
9. What Are the Standards for Hydrocarbon?
10. What Are the Standards for Destruction and Removal Efficiency?
VII. What Are the Standards for Hazardous Waste Burning Cement Kilns?
A. To Which Cement Kilns Do Today's Standards Apply?
B. How Did EPA Initially Classify Cement Kilns?
1. What Is the Basis for a Separate Class Based on Hazardous Waste Burning?
2. What Is the Basis for Differences in Standards for Hazardous Waste and Nonhazardous Waste Burning Cement Kilns?
C. What Further Subcategorization Considerations Are Made?
D. What Are The Standards for Existing and New Cement Kilns?
1. What Are the Standards for Cement Kilns?
2. What Are the Dioxin and Furan Standards?
3. What Are the Mercury Standards?
4. What Are the Particulate Matter Standards?
5. What Are the Semivolatile Metals Standards?
6. What Are the Low Volatile Metals Standards?
7. What Are the Hydrochloric Acid and Chlorine Gas Standards?
8. What Are the Hydrocarbon and Carbon Monoxide Standards for Kilns Without By-Pass Sampling Systems?
9. What Are the Carbon Monoxide and Hydrocarbon Standards for Kilns With By-Pass Sampling Systems?
10. What Are the Destruction and Removal Efficiency Standards?
VIII. What Are the Standards for Existing and New Hazardous Waste Burning Lightweight Aggregate Kilns?
A. To Which Lightweight Aggregate Kilns Do Today's Standards Apply?
B. What Are the Standards for New and Existing Hazardous Waste Burning Lightweight Aggregate Kilns?
1. What Are the Standards for Lightweight Aggregate Kilns?

2. What Are the Dioxin and Furan Standards?
3. What Are the Mercury Standards?
4. What Are the Particulate Matter Standards?
5. What Are the Semivolatile Metals Standards?
6. What Are the Low Volatile Metals Standards?
7. What Are the Hydrochloric Acid and Chlorine Gas Standards?
8. What Are the Hydrocarbon and Carbon Monoxide Standards?
9. What Are the Standards for Destruction and Removal Efficiency?
Part Five: Implementation
I. How Do I Demonstrate Compliance with Today's Requirements?
A. What Sources Are Subject to Today's Rules?
1. What Is an Existing Source?
2. What Is a New Source?
B. How Do I Cease Being Subject to Today's Rule?
C. What Requirements Apply If I Temporarily Cease Burning Hazardous Waste?
1. What Must I Do to Comply with Alternative Compliance Requirements?
2. What Requirements Apply If I Do Not Use Alternative Compliance Requirements?
D. What Are the Requirements for Startup, Shutdown and Malfunction Plans?
E. What Are the Requirements for Automatic Waste Feed Cutoffs?
F. What Are the Requirements of the Excess Exceedance Report?
G. What Are the Requirements for Emergency Safety Vent Openings?
H. What Are the Requirements for Combustion System Leaks?
I. What Are the Requirements for an Operation and Maintenance Plan?
II. What Are the Compliance Dates for this Rule?
A. How Are Compliance Dates Determined?
B. What Is the Compliance Date for Sources Affected on April 19, 1996?
C. What Is the Compliance Date for Sources That Become Affected After April 19, 1996?
III. What Are the Requirements for the Notification of Intent to Comply?
IV. What Are the Requirements for Documentation of Compliance?
A. What Is the Purpose of the Documentation of Compliance?
B. What Is the Rationale for the DOC?
C. What Must Be in the DOC?
V. What Are the Requirements for MACT Performance Testing?
A. What Are the Compliance Testing Requirements?
1. What Are the Testing and Notification of Compliance Schedules?
2. What Are the Procedures for Review and Approval of Test Plans and Requirements for Notification of Testing?
3. What Is the Provision for Time Extensions for Subsequent Performance Tests?
4. What Are the Provisions for Waiving Operating Parameter Limits During Subsequent Performance Tests?
B. What Is the Purpose of Comprehensive Performance Testing?
1. What Is the Rationale for the Five Year Testing Frequency?
2. What Operations Are Allowed During a Comprehensive Performance Test?
3. What Is the Consequence of Failing a Comprehensive Performance Test?
C. What Is the Rationale for Confirmatory Performance Testing?
1. Do the Comprehensive Testing Requirements Apply to Confirmatory Testing?
2. What Is the Testing Frequency for Confirmatory Testing?
3. What Operations Are Allowed During Confirmatory Performance Testing?
4. What Are the Consequences of Failing a Confirmatory Performance Test?
D. What Is the Relationship Between the Risk Burn and Comprehensive Performance Test?
1. Is Coordinated Testing Allowed?
2. What Is Required for Risk Burn Testing?
E. What Is a Change in Design, Operation, and Maintenance?
F. What are the Data In Lieu Allowances?
VI. What Is the Notification of Compliance?
A. What Are the Requirements for the Notification of Compliance?
B. What Is Required in the NOC?
C. What Are the Consequences of Not Submitting a NOC?
D. What Are the Consequences of an Incomplete Notification of Compliance?
E. Is There a Finding of Compliance?
VII. What Are the Monitoring Requirements?
A. What Is the Compliance Monitoring Hierarchy?
B. How Are Comprehensive Performance Test Data Used to Establish Operating Limits?
1. What Are the Definitions of Terms Related to Monitoring and Averaging Periods?
2. What Is the Rationale for the Averaging Periods for the Operating Parameter Limits?
3. How Are Performance Test Data Averaged to Calculate Operating Parameter Limits?
4. How Are the Various Types of Operating Parameters Monitored or Established?
5. How Are Rolling Averages Calculated Initially, Upon Intermittent Operations, and When the Hazardous Waste Feed Is Cut Off?
6. How Are Nondetect Performance Test Feedstream Data Handled?
C. Which Continuous Emissions Monitoring Systems Are Required in the Rule?
1. What Are the Requirements and Deferred Actions for Particulate Matter CEMS?
2. What Are the Test Methods, Specifications, and Procedures?
3. What Is the Status of Total Mercury CEMS?
4. What Is the Status of the Proposed Performance Specifications for Multimetal, Hydrochloric Acid, and Chlorine Gas CEMS?
5. How Have We Addressed Other Issues: Continuous Samplers as CEMS, Averaging Periods for CEMS, and Incentives for Using CEMS?
D. What Are the Compliance Monitoring Requirements?
1. What Are the Operating Parameter Limits for Dioxin/Furan?
2. What Are the Operating Parameter Limits for Mercury?
3. What Are the Operating Parameter Limits for Semivolatile and Low Volatile Metals?
4. What Are the Monitoring Requirements for Carbon Monoxide and Hydrocarbon?
5. What Are the Operating Parameter Limits for Hydrochloric Acid/Chlorine Gas?
6. What Are the Operating Parameter Limits for Particulate Matter?
7. What Are the Operating Parameter Limits for Destruction and Removal Efficiency?
VIII. Which Methods Should Be Used for Manual Stack Tests and Feedstream Sampling and Analysis?
A. Manual Stack Sampling Test Methods
B. Sampling and Analysis of Feedstreams
IX. What Are the Reporting and Recordkeeping Requirements?
A. What Are the Reporting Requirements?
B. What Are the Recordkeeping Requirements?
C. How Can You Receive Approval to Use Data Compression Techniques?
X. What Special Provisions Are Included in Today's Rule?
A. What Are the Alternative Standards for Cement Kilns and Lightweight Aggregate Kilns?
1. What Are the Alternative Standards When Raw Materials Cause an Exceedance of an Emission Standard?
2. What Special Provisions Exist for an Alternative Mercury Standard for Kilns?
B. Under What Conditions Can the Performance Testing Requirements Be Waived?
1. How Is This Waiver Implemented?
2. How Are Detection Limits Handled Under This Provision?
C. What Other Waiver Was Proposed, But Not Adopted?
D. What Equivalency Determinations Were Considered, But Not Adopted?
E. What are the Special Compliance Provisions and Performance Testing Requirements for Cement Kilns with In-line Raw Mills and Dual Stacks?
F. Is Emission Averaging Allowable for Cement Kilns with Dual Stacks and In-line Raw Mills?
1. What Are the Emission Averaging Provisions for Cement Kilns with In-line Raw Mills?
2. What Emission Averaging Is Allowed for Preheater or Preheater-Precalciner Kilns with Dual Stacks?
G. What Are the Special Regulatory Provisions for Cement Kilns and Lightweight Aggregate Kilns that Feed Hazardous Waste at a Location Other Than the End Where Products Are Normally Discharged and Where Fuels Are Normally Fired?
H. What is the Alternative Particulate Matter Standard for Incinerators?

1. Why is this Alternative Particulate Matter Standard Appropriate under MACT?
2. How Do I Demonstrate Eligibility for the Alternative Standard?
3. What is the Process for the Alternative Standard Petition?
XI. What Are the Permitting Requirements for Sources Subject to this Rule?
A. What Is the Approach to Permitting in this Rule?
1. In General What Was Proposed and What Was Commenters' Reaction?
2. What Permitting Approach Is Adopted in Today's Rule?
3. What Considerations Were Made for Ease of Implementation?
B. What Is the Applicability of the Title V and RCRA Permitting Requirements?
1. How Are the Title V Permitting Requirements Applicable?
2. What Is the Relationship Between the Notification of Compliance and the Title V Permit?
3. Which RCRA Permitting Requirements Are Applicable?
4. What Is the Relationship of Permit Revisions to RCRA Combustion Permitting Procedures?
5. What is the Relationship to the RCRA Preapplication Meeting Requirements?
C. Is Title V Permitting Applicable to Area Sources?
D. How will Sources Transfer from RCRA to MACT Compliance and Title V Permitting?
1. In General. How Will this Work?
2. How Will I Make the Transition to CAA Permits?
3. When Should RCRA Permits Be Modified?
4. How Should RCRA Permits Be Modified?
5. How Should Sources in the Process of Obtaining RCRA Permits be Switched Over to Title V?
E. What is Meant by Certain Definitions?
1. Prior Approval
2. 50 Percent Benchmark
3. Facility Definition
4. No New Eligibility for Interim Status
5. What Constitutes Construction Requiring Approval?
XII. State Authorization
A. What is the Authority for Today's Rule?
B. How is the Program Delegated Under the Clean Air Act?
C. How are States Authorized Under RCRA?
Part Six: Miscellaneous Provisions and Issues
I. Does the Waiver of the Particulate Matter Standard or the Destruction and Removal Efficiency Standard Under the Low Risk Waste Exemption of the BIF Rule Apply?
II. What is the Status of the "Low Risk Waste" Exemption?
III. What Concerns Have Been Considered for Shakedown?
IV. What Are the Management Requirements Prior to Burning?
V. Are There Any Conforming Changes to Subpart X?
VI. What Are the Requirements for Bevill Residues?
A. Dioxin Testing of Bevill Residues
B. Applicability of Part 266 Appendix VIII Products of Incomplete Combustion List
VII. Have There Been Any Changes in Reporting Requirements for Secondary Lead Smelters?
VIII. What Are the Operator Training and Certification Requirements?
IX. Why Did the Agency Redesignate Existing Regulations Pertaining to the Notification of Intent to Comply and Extension of the Compliance Date?
Part Seven: National Assessment of Exposures and Risks
I. What Changes Were Made to the Risk Methodology?
A. How Were Facilities Selected for Analysis?
B. How Were Facility Emissions Estimated?
C. What Receptor Populations Were Evaluated?
D. How Were Exposure Factors Determined?
E. How Were Risks from Mercury Evaluated?
F. How Were Risks from Dioxins Evaluated?
G. How Were Risks from Lead Evaluated?
H. What Analytical Framework Was Used to Assess Human Exposures and Risk?
I. What Analytical Framework Was Used to Assess Ecological Risk?
II. How Were Human Health Risks Characterized?
A. What Potential Health Hazards Were Evaluated?
1. Dioxins
2. Mercury
3. Lead
4. Other Metals
5. Hydrogen Chloride
6. Chlorine
B. What are the Health Risks to Individuals Residing Near HWC Facilities?
1. Dioxins
2. Mercury
3. Lead
4. Other Metals
5. Inhalation Carcinogens
6. Other Inhalation Exposures
C. What are the Potential Health Risks to Highly Exposed Individuals?
1. Dioxins
2. Metals
3. Mercury
D. What is the Incidence of Adverse Health Effects in the Population?
1. Cancer Risk in the General Population
2. Cancer Risk in the Local Population
3. Risks from Lead Emissions
4. Risks from Emissions of Particulate Matter
III. What is the Potential for Adverse Ecological Effects?
A. Dioxins
B. Mercury
Part Eight: Analytical and Regulatory Requirements
I. Executive Order 12866: Regulatory Planning and Review (58 FR 51735)
II. What Activities Have Led to Today's Rule?
A. What Analyses Were Completed for the Proposal?
1. Costs
2. Benefits
3. Other Regulatory Issues
4. Small Entity Impacts
B. What Major Comments Were Received on the Proposal RIA?
1. Public Comments
2. Peer Review
III. Why is Today's Rule Needed?
IV. What Were the Regulatory Options?
V. What Are the Potential Costs and Benefits of Today's Rule?
A. Introduction
B. Combustion Market Overview
C. Baseline Specification
D. Analytical Methodology and Findings—Engineering Compliance Cost Analysis
E. Analytical Methodology and Findings—Social Cost Analysis
F. Analytical Methodology and Findings—Economic Impact Analysis
1. Market Exit Estimates
2. Quantity of Waste Reallocated
3. Employment Impacts
4. Combustion Price Increases
5. Industry Profits
6. National-Level Joint Economic Impacts
G. Analytical Methodology and Findings—Benefits Assessment
1. Human Health and Ecological Benefits
2. Waste Minimization Benefits
VI. What Considerations Were Given to Issues Like Equity and Children's Health?
A. Executive Order 12898, "Federal Actions to Address Environmental Justice in Minority Populations and Low-Income Populations" (February 11, 1994)
B. Executive Order 13045: Protection of Children from Environmental Health Risks and Safety Risks (62 FR 19885, April 23, 1997)
C. Unfunded Mandates Reform Act of 1995 (URMA) (Pub. Law 104–4)
VII. Is Today's Rule Cost Effective?
VIII. How Do the Costs of Today's Rule Compare to the Benefits?
IX. What Consideration Was Given to Small Businesses?
A. Regulatory Flexibility Act (RFA) as amended by the Small Business Regulatory Enforcement Fairness Act of 1996 (SBREFA), 5 U.S.C. 601 *et seq.*
B. Analytical Methodology
C. Results—Direct Impacts
D. Results—Indirect Impacts
E. Key Assumptions and Limitations
X. Were Derived Air Quality and Non-Air Impacts Considered?
XI. The Congressional Review Act (5 U.S.C. 801 *et seq.*, as added by the Small Business Regulatory Enforcement Fairness Act of 1996)
XII. Paperwork Reduction Act (PRA), 5 U.S.C. 3501–3520
XIII. National Technology Transfer and Advancement Act of 1995 (Pub L. 104–113, section 12(d)) (15 U.S.C. 272 note)
XIV. Executive Order 13084: Consultation and Coordination With Indian Tribal Governments (63 FR 27655)
Part Nine: Technical Amendments to Previous Regulations
I. Changes to the June 19, 1998 "Fast-track" Rule
A. Permit Streamlining Section
B. Comparable Fuels Section

Part One: Overview and Background for This Rule

I. What Is the Purpose of This Rule?

In this final rule, we adopt hallmark standards to more rigorously control toxic emissions from burning hazardous waste in incinerators, cement kilns, and lightweight aggregate kilns. These emission standards and continuation of our RCRA risk policy create a national cap for emissions that assures that combustion of hazardous waste in these devices is properly controlled.

The standards themselves implement section 112 of the Clean Air Act (CAA) and apply to the three major categories of hazardous waste burners—incinerators, cement kilns, and lightweight aggregate kilns. For purposes of today's rule, we refer to these three categories collectively as hazardous waste combustors. Hazardous waste combustors burn about 80% of the hazardous waste combusted annually within the United States. As a result, we project that today's standards will achieve highly significant reductions in the amount of hazardous air pollutants being emitted each year by hazardous waste combustors. For example, we estimate that 70 percent of the annual dioxin and furan emissions from hazardous waste combustors will be eliminated. Mercury emissions already controlled to some degree under existing regulations will be further reduced by about 55 percent.

Section 112 of the CAA requires emissions standards for hazardous air pollutants to be based on the performance of the Maximum Achievable Control Technology (MACT). The emission standards in this final rule are commonly referred to as MACT standards because we use the MACT concept to determine the levels of emission control under section 112(d) of the CAA.[1] At the same time, these emissions standards satisfy our obligation under the main statute regulating hazardous waste management, the Resource Conservation Recovery Act (RCRA), to ensure that hazardous waste combustion is conducted in a manner adequately protective of human health and the environment. Our use of both authorities as the legal basis for today's rule and details of the MACT standard-setting process are explained more fully in later sections of this preamble. Most significantly, by using both authorities in a harmonized fashion, we consolidate regulatory control of hazardous waste combustion into a single set of regulations, thereby eliminating the potential for conflicting or duplicative federal requirements.

Today's rule also has other important features in terms of our legal obligations and public commitments. First, promulgation of these standards fulfills our legal obligations under the CAA to control emissions of hazardous air pollutants from hazardous-waste burning incinerators and Portland cement kilns.[2] Second, today's rule fulfills our 1993 and 1994 public commitments to upgrade emission standards for hazardous waste combustors. These commitments are the centerpiece of our Hazardous Waste Minimization and Combustion Strategy.[3] Finally, today's rulemaking satisfies key terms of a litigation settlement agreement entered into in 1993 with a number of groups that had challenged our previous rule addressing emissions from hazardous waste boilers and industrial furnaces.[4]

II. In Brief. What Are the Major Features of Today's Rule?

The major features of today's final rule are summarized below.

A. Which Source Categories Are Affected by This Rule?

This rule establishes MACT standards for three source categories, namely: Hazardous waste burning incinerators, hazardous waste burning cement kilns, and hazardous waste burning lightweight aggregate kilns. As mentioned earlier, we refer to these three source categories collectively as hazardous waste combustors.

B. How Are Area Sources Affected by This Rule?

This rule establishes that MACT standards apply to both major sources—sources that emit or have the potential to emit 10 tons or greater per year of any single hazardous air pollutant or 25 tons per year or greater of hazardous air pollutants in the aggregate—and area sources, all others. Area sources may be regulated under MACT standards if we find that the category of area sources "presents a threat of adverse effects to human health or the environment * * * warranting regulation (under the MACT standards)." We choose to regulate area sources in today's rule and, as a result, all hazardous waste burning incinerators, cement kilns, and lightweight aggregate kilns will be regulated under standards reflecting MACT.

C. What Emission Standards Are Established in This Rule?

This rule establishes emission standards for: Chlorinated dioxins and furans; mercury; particulate matter (as a surrogate for antimony, cobalt, manganese, nickel, and selenium); semivolatile metals (lead and cadmium); low volatile metals (arsenic, beryllium, and chromium); hydrogen chloride and chlorine gas (combined). This rule also establishes standards for carbon monoxide, hydrocarbons, and destruction and removal efficiency as surrogates in lieu of individual standards for nondioxin/furan organic hazardous air pollutants.

D. What Are the Procedures for Complying With This Rule?

This rule establishes standards that apply at all times (including during startup, shutdown, or malfunction), except if hazardous waste is not being burned or is not in the combustion chamber. When not burning hazardous waste (and when hazardous waste does not remain in the combustion chamber), you may either follow the hazardous waste burning standards in this rule or emission standards we promulgate, if any, for other relevant nonhazardous waste source categories.

Initial compliance is documented by stack performance testing. To document continued compliance with the carbon monoxide or hydrocarbon standards, you must use continuous emissions monitoring systems. For the remaining standards, you must document continued compliance by monitoring limits on specified operating parameters. These operating parameter

[1] The MACT standards reflect the "maximum degree of reduction in emissions of * * * hazardous air pollutants" that the Administrator determines is achievable, taking into account the cost of achieving such emission reduction and any nonair quality health and environmental impacts and energy requirements. Section 112(d)(2).

[2] In a 1992 **Federal Register** notice, we published the inital list of categories of major and area sources of hazardous air pollutants including hazardous waste incinerators and Portland cement plants. See 57 FR 31576 (July 16, 1992). Today's rule meets our obligation to issue MACT standards for hazardous waste incinerators. Today's rule also partially meets our obligation to issue MACT standards for Portland cement plants. To complete the obligation, we have finalized, in a separate rulemaking, MACT standards for the portland cement industry source category. Those standards apply to all cement kilns except those kilns that burn hazardous waste. See 64 FR 31898 (June 14, 1999). Those standards also apply to other HAP emitting sources at a cement plant (such as clinker coolers, raw mills, finish mills, and materials handling operations) regardless of whether the plant has hazardous waste burning cement kilns.

[3] EPA Document Number 530-R-94-044, Office of Solid Waste and Emergency Response, November 1994.

[4] "Burning of Hazardous Waste in Boilers and Industrial Furnaces" (56 FR 7134, February 21, 1991). These groups include the Natural Resources Defense Council, Sierra Club, Environmental Technology Council, National Solid Waste Management Association, and a number of local citizens' groups.

limits[5] are calculated based on performance test conditions using specified procedures intended to ensure that the operating conditions (and by correlation the actual emissions) do not exceed performance test levels at any time. You must also install an automatic waste feed cutoff system that immediately stops the flow of hazardous waste feed to the combustor if a continuous emissions monitoring system records a value exceeding the standard or if an operating parameter limit is exceeded (considering the averaging period for the standard or operating parameter). The standards and operating parameter limits apply when hazardous waste is being fed or remains in the combustion chamber irrespective of whether you institute the corrective measures prescribed in the startup, shutdown, and malfunction plan.

E. What Subsequent Performance Testing Must Be Performed?

You must conduct comprehensive performance testing every five years. This testing regime is referred to as "subsequent performance testing." You must revise the operating parameter limits as necessary based on the levels achieved during the subsequent performance test. In addition, you must conduct confirmatory performance testing of dioxins/furans emissions under normal operating conditions midway between subsequent performance tests.

F. What Is the Time Line for Complying With This Rule?

The compliance date of the standards promulgated in today's rule is three years after the date of publication of the rule in the **Federal Register**, or September 30, 2002 (See CAA section 112(i)(3)(A) indicating that the Environmental Protection Agency (EPA) may establish a compliance date no later than three years from the date of promulgation.) A one-year extension of the compliance date may be requested if you cannot complete system retrofits by the compliance date despite a good faith effort to do so.[6] CAA section 112(i)(3)(B). Continuous emissions monitoring systems and other continuous monitoring systems for the specified operating parameters must be fully operational by the compliance date. You must demonstrate compliance by conducting a performance test no later than 6 months after the compliance date (i.e., three and one-half years from the date of publication of today's rule in the **Federal Register**).

To ensure timely compliance with the standards, by the compliance date you must place in the operating record a Documentation of Compliance identifying limits on the specified operating parameters you believe are necessary and sufficient to comply with the emission standards. These operating parameter limits (and the carbon monoxide or hydrocarbon standards monitored with continuous monitoring systems) are enforceable until you submit to the Administrator a Notification of Compliance within 90 days of completion of the performance test.

The Notification of Compliance must document: (1) Compliance with the emission standards during the performance test; (2) the revised operating parameter limits calculated from the performance test; and (3) conformance of the carbon monoxide or hydrocarbon continuous emissions monitoring systems and the other continuous monitoring systems with performance specifications. You must comply with the revised operating parameter limits upon submittal of the Notification of Compliance.

G. How Does This Rule Coordinate With the Existing RCRA Regulatory Program?

You must have a RCRA permit for stack air emissions (or RCRA interim status) until you demonstrate compliance with the MACT standards. You do so by conducting a comprehensive performance test and submitting a Notification of Compliance to the Administrator, as explained above.[7] Hazardous waste combustors with RCRA permits remain subject to RCRA stack air emission permit conditions until the RCRA permit is modified to delete those conditions. (As discussed later in more detail, we recommend requesting modification of the RCRA permit at the time you submit the Notification of Compliance.) Only those provisions of the RCRA permit that are less stringent than the MACT requirements specified in the Notification of Compliance will be approved for deletion.[8] Hazardous waste combustors still in interim status without a full RCRA permit are no longer subject to the RCRA stack air emissions standards for hazardous waste combustors in Subpart O of Part 265 and subpart H of part 266 once compliance with the MACT standards has been demonstrated and a Notification of Compliance has been submitted to the Administrator.

You must satisfy both sets of requirements during the relatively short period when both RCRA and MACT stack air emissions standards and associated requirements in the RCRA permit or in RCRA interim status regulations are effective.

You also may have existing site-specific permit conditions. On a case-by-case basis during RCRA permit issuance or renewal, we determine whether further regulatory control of emissions is needed to protect human health and the environment, notwithstanding compliance with existing regulatory standards. Additional conditions may be included in the permit in addition to those derived from the RCRA emission standards as necessary to ensure that facility operations are protective of human health and the environment. Any of these risk-based permit provisions more stringent than today's MACT standards (or that address other emission hazards) will remain in the RCRA permit.

After the MACT compliance date, hazardous waste combustors must continue to comply with the RCRA permit issuance process to address nonMACT provisions (*e.g.*, general facility standards) and potentially conduct a risk review under § 270.32(b)(2) to determine if additional requirements pertaining to stack or other emissions are warranted to ensure protection of human health and the environment.

III. What Is the Basis of Today's Rule?

As stated previously, this rule issues final National Emissions Standards for Hazardous Air Pollutants (NESHAPS) under authority of section 112 of the Clean Air Act for three source categories of combustors: Hazardous waste burning incinerators, hazardous waste burning cement kilns, and hazardous waste burning lightweight aggregate kilns. The main purposes of the CAA are to protect and enhance the quality of our Nation's

[5] The term "operating parameter limit" and "operating limit" have the same meaning and are used interchangeably in the preamble and rule language.

[6] In June 1998, we promulgated a rule to allow hazardous waste combustors also to request a one-year extension to the MACT compliance date in cases where additional time will be needed to install pollution prevention and waste minimization measures to significantly reduce the amount or toxicity of hazardous waste entering combustion feedstreams. See 63 FR at 43501 (June 19, 1998). This provision is recodified in today's rule as 40 CFR 63.1213.

[7] Hazardous waste combustors, of course, also continue to be subject to applicable RCRA requirements for all other aspects of their hazardous waste management activities that are separate from the requirements being deferred to the CAA by this rule.

[8] RCRA permit requirements that may be less stringent than applicable MACT standards are nonetheless enforceable until the RCRA permit is modified.

air resources, and to promote the public health and welfare and the productive capacity of the population. CAA section 101(b)(1). To this end, sections 112(a) and (d) of the CAA direct EPA to set standards for stationary sources emitting (or having the potential to emit) ten tons or greater of any one hazardous air pollutant or 25 tons or greater of total hazardous air pollutants annually. Such sources are referred to as "major sources."

Today's rule establishes MACT emission standards for the following hazardous air pollutants emitted by hazardous waste burning incinerators, hazardous waste burning cement kilns, and hazardous waste burning lightweight aggregate kilns: Chlorinated dioxins and furans, mercury, two semivolatile metals (lead and cadmium), three low volatility metals (arsenic, beryllium, and chromium), and hydrochloric acid/chlorine gas. This rule also establishes MACT control for the other hazardous air pollutants identified in CAA section 112(b)(1) through the adoption of standards using surrogates. For example, we adopt a standard for particulate matter as a surrogate to control five metals that do not have specific emission standards established in today's rule. These five metals are antimony, cobalt, manganese, nickel, and selenium. Also, we adopt standards for carbon monoxide, hydrocarbons, and destruction and removal efficiency to control the other organic hazardous air pollutants listed in section 112(b)(1) that do not have specific emission standards established in this rule.

Today's standards meet our commitment under the Hazardous Waste Minimization and Combustion Strategy, first announced in May 1993, to upgrade the emission standards for hazardous waste burning facilities. EPA's Strategy has eight goals: (1) Ensure public outreach and EPA-State coordination; (2) pursue aggressive use of waste minimization measures; (3) continue to ensure that combustion and alternative and innovative technologies are safe and effective; (4) develop and impose more rigorous controls on combustion facilities; (5) continue aggressive compliance and enforcement efforts; (6) enhance public involvement opportunities in the permitting process for combustion facilities; (7) give higher priority to permitting those facilities where a final permit decision would result in the greatest environmental benefit or the greatest reduction in risk; and (8) advance scientific understanding on combustion issues and risk assessment and ensure that permits are issued in a manner that provides proper protection of human health and the environment.

We have made significant progress in implementing the Strategy. Today's rule meets the Strategy goal of developing and implementing rigorous state-of-the-art safety controls on hazardous waste combustors by using the best available technologies and the most current science.[9] We also developed a software tool (*i.e.*, the Waste Minimization Prioritization Tool) that allows users to access relative persistent, bioaccumulative and toxic hazard scores for any of 2,900 chemicals that may be present in RCRA waste streams. We also committed to the reduction of the generation of the most persistent, bioaccumulative and toxic chemicals by 50 percent by 2005. To facilitate this reduction we are developing a list of the persistent, bioaccumulative and toxic chemicals of greatest concern and a plan for working with the regulated community to reduce these chemicals. In addition, we promulgated new requirements to enhance public involvement in the permitting process [10] and performed risk evaluations during the permitting process for high priority facilities. We also made allowances for one-year extensions to the MACT compliance period as incentives designed to promote the installation of cost-effective pollution prevention technologies to replace or supplement emission control technologies for meeting MACT standards.

Finally, with regard to the regulatory framework that will result from today's rule, we are eliminating the existing RCRA stack emissions national standards for hazardous waste incinerators, cement kilns, and lightweight aggregate kilns. That is, after submittal of the Notification of Compliance established by today's rule (and, where applicable, RCRA permit modifications at individual facilities), RCRA national stack emission standards will no longer apply to these hazardous waste combustors. We originally issued air emission standards under the authority of section 3004(a) of RCRA, which calls for EPA to promulgate standards "as may be necessary to protect human health and the environment." In light of today's new MACT standards, we have determined that RCRA emissions standards for these sources would only be duplicative and so are no longer necessary to protect human health and the environment. Under the authority of section 3004(a), it is appropriate to eliminate such duplicative standards.

Emission standards for hazardous waste burning incinerators and other sources burning hazardous wastes as fuel must be protective of human health and the environment under RCRA. We conducted a multipathway risk assessment to assess the ecological and human health risks that are projected to occur under the MACT standards. We have concluded that the MACT standards are generally protective of human health and the environment and that separate RCRA emission standards are not needed. Please see a full discussion of the national assessment of exposures and risk in Part VIII of this preamble.

Additionally, RCRA section 1006(b) directs EPA to integrate the provisions of RCRA for purposes of administration and enforcement and to avoid duplication, to the maximum extent practicable, with the appropriate provisions of the Clean Air Act and other federal statutes. This integration must be done in a way that is consistent with the goals and policies of these statutes. Therefore, section 1006(b) provides further authority for EPA to eliminate the existing RCRA stack emissions standards to avoid duplication with the new MACT standards. Nevertheless, under the authority of RCRA's "omnibus" clause (section 3005(c)(3); see 40 CFR 270.32(b)(2)), RCRA permit writers may still impose additional terms and conditions on a site-specific basis as may be necessary to protect human health and the environment.

IV. What Was the Rulemaking Process for Development of This Rule?

We proposed MACT standards for hazardous waste burning incinerators, hazardous waste burning cement kilns, and hazardous waste burning lightweight aggregate kilns on April 19, 1996. (61 FR 17358) In addition, we published five notices of data availability (NODAs):

1. August 23, 1996 (61 FR 43501), inviting comment on information pertaining to a peer review of three aspects of the proposed rule and information pertaining to the since-promulgated "Comparable Fuels" rule (see 63 FR 43501 (June 19, 1998));

2. January 7, 1997 (62 FR 960), inviting comment on an updated hazardous waste combustor data base containing the emissions and ancillary

[9] The three source categories covered by today's final rule burn more than 80 percent of the total amount of hazardous waste being combusted each year. The remaining 15–20 percent is burned in industrial boilers and other types of industrial furnaces, which will be addressed in a future NESHAPS rulemaking for hazardous waste burning sources.

[10] See 60 FR 63417 (December 11, 1995).

data that the Agency used to develop the final rule;

3. March 21, 1997 (62 FR 13775), inviting comment on our approach to demonstrate the technical feasibility of monitoring particulate matter emissions from hazardous waste combustors using continuous emissions monitoring systems;

4. May 2, 1997 (62 FR 24212), inviting comment on several topics including the status of establishing MACT standards for hazardous waste combustors using a revised emissions data base and the status of various implementation issues, including compliance dates, compliance requirements, performance testing, and notification and reporting requirements; and

5. December 30, 1997 (62 FR 67788), inviting comment on several status reports pertaining to particulate matter continuous emissions monitoring systems.

Finally, we have had many formal and informal meetings with stakeholders, representing an on-going dialogue on various aspects of the rulemaking.

We carefully considered information and comments submitted by stakeholders on these rulemaking actions and during meetings. We address their comments in our Response to Comments documents, which can be found in the public docket supporting this rulemaking. In addition, we addressed certain significant comments at appropriate places in this preamble.

Part Two: Which Devices Are Subject to Regulation?

I. Hazardous Waste Incinerators

Hazardous waste incinerators are enclosed, controlled flame combustion devices, as defined in 40 CFR 260.10. These devices may be fixed or transportable. Major incinerator designs used in the United States are rotary kilns, fluidized beds, liquid injection and fixed hearth, while newer designs and technologies are also coming into operation. Detailed descriptions of the designs, types of facilities and typical air pollution control devices were presented in the April 1996 NPRM and in the technical background document prepared to support the NPRM. (See 61 FR 17361, April 19, 1996.) In 1997, there were 149 hazardous waste incinerator facilities operating 189 individual units in the U.S. Of these 149 facilities, 20 facilities (26 units) were commercial hazardous waste incinerators, while the remaining 129 facilities (163 units) were on-site hazardous waste incinerators.

II. Hazardous Waste Burning Cement Kilns

Cement kilns are horizontally inclined rotating cylinders, lined with refractory-brick, and internally fired. Cement kilns are designed to calcine, or drive carbon dioxide out of, a blend of raw materials such as limestone, shale, clay, or sand to produce Portland cement. When combined with sand, gravel, water, and other materials, Portland cement forms concrete, a material used widely in many building and construction applications.

Generally, there are two different processes used to produce Portland cement: a wet process and a dry process. In the wet process, raw materials are ground, wetted, and fed into the kiln as a slurry. In the dry process, raw materials are ground and fed dry into the kiln. Wet process kilns are typically longer in length than dry process kilns to facilitate water evaporation from the slurried raw material. Dry kilns use less energy (heat) and also can use preheaters or precalciners to begin the calcining process before the raw materials are fed into the kiln.

A number of cement kilns burn hazardous waste-derived fuels to replace some or all of normal fossil fuels such as coal. Most kilns burn liquid waste; however, cement kilns also may burn bulk solids and small containers containing viscous or solid hazardous waste fuels. Containers are introduced either at the upper, raw material end of the kiln or at the midpoint of the kiln.

All existing hazardous waste burning cement kilns use particulate matter control devices. These cement plants either use fabric filters (baghouses) or electrostatic precipitators to control particulate matter.

In 1997, there were 18 Portland cement plants operating 38 hazardous waste burning kilns. Of these 38 kilns, 27 kilns use the wet process to manufacture cement and 11 kilns use the dry process. Of the dry process kilns, one kiln uses a preheater and another kiln used a preheater and precalciner. Detailed descriptions of the design types of facilities and typical air pollution control devices are presented in the technical background document.[11]

In developing standards, the Agency considered the appropriateness of distinguishing among the different types of cement kilns burning hazardous waste. We determined that distinguishing subcategories of hazardous waste burning cement kilns was not needed to develop uniform, achievable MACT standards. (See Part Four, Section VII of the preamble for a discussion of subcategory considerations.)

III. Hazardous Waste Burning Lightweight Aggregate Kilns

The term "lightweight aggregate" refers to a wide variety of raw materials (such as clay, shale, or slate) that, after thermal processing, can be combined with cement to form concrete products. Lightweight aggregate concrete is produced either for structural purposes or for thermal insulation purposes. A lightweight aggregate plant is typically composed of a quarry, a raw material preparation area, a kiln, a cooler, and a product storage area. The material is taken from the quarry to the raw material preparation area and from there is fed into the rotary kiln.

A rotary kiln consists of a long steel cylinder, lined internally with refractory bricks, which is capable of rotating about its axis and is inclined horizontally. The prepared raw material is fed into the kiln at the higher end, while firing takes place at the lower end. As the raw material is heated, it melts into a semiplastic state and begins to generate gases that serve as the bloating or expanding agent. As temperatures reach their maximum, the semiplastic raw material becomes viscous and entraps the expanding gases. This bloating action produces small, unconnected gas cells, which remain in the material after it cools and solidifies. The product exits the kiln and enters a section of the process where it is cooled with cold air and then conveyed to the discharge. Kiln operating parameters such as flame temperature, excess air, feed size, material flow, and speed of rotation vary from plant to plant and are determined by the characteristics of the raw material.

In 1997, there were five lightweight aggregate kiln facilities in the United States operating 10 hazardous waste-fired kilns. Detailed descriptions of the lightweight aggregate process and air pollution control techniques are presented in the technical support document.[12]

[11] USEPA, "Final Technical Support Document for HWC MACT Standards, Volume I: Description of Source Categories," July 1999.

[12] USEPA, "Final Technical Support Document for HWC MACT Standards, Volume I: Description of Source Categories," July 1999.

Part Three: How Were the National Emission Standards for Hazardous Air Pollutants (NESHAP) in This Rule Determined?

I. What Authority Does EPA Have To Develop a NESHAP?

The 1990 Amendments to the Clean Air Act (CAA) significantly revised the requirements for controlling emissions of hazardous air pollutants. EPA is required to develop a list of categories of major and area sources of the hazardous air pollutants identified in section 112 and to develop, over specified time periods, technology-based performance standards for sources of these hazardous air pollutants. See CAA sections 112(c) and 112(d). These source categories and subcategories are to be listed pursuant to section 112(c)(1). We published an initial list of 174 categories of such major and area sources in the **Federal Register** on July 16, 1992 (57 FR 31576), which was later amended at 61 FR 28197 (June 4, 1996) [13] and 63 FR 7155 (February 12, 1998). That list includes the Hazardous Waste Incineration, Portland Cement Manufacturing, and Clay Products Manufacturing source categories.

Promulgation of technology-based standards for these listed source categories is not necessarily the final step in the process. CAA section 112(f) requires the Agency to report to Congress on the estimated risk remaining after imposition of technology-based standards and make recommendations as to additional legislation needed to address such risk. If Congress does not act on any recommendation presented in this report, we are required to impose additional controls if such controls are needed to protect public health with an ample margin of safety or (taking into account costs, energy, safety, and other relevant factors) to prevent adverse environmental effects. In addition, if the technology-based standards for carcinogens do not reduce the lifetime excess cancer risk for the most exposed individual to less than one in a million (1×10^{-6}), then we must promulgate additional standards.

We prepared the Draft Residual Risk Report to Congress and announced its release on April 22, 1998 (63 FR 19914–19916). In that report, we did not propose any legislative recommendation to Congress. In section 4.2.4 of the report, we state that: "The legislative strategy embodied in the 1990 CAA Amendments adequately maintains the goal of protecting the public health and the environment and provides a complete strategy for dealing with a variety of risk problems. The strategy recognizes that not all problems are national problems or have a single solution. National emission standards will be promulgated to decrease the emissions of as many hazardous air pollutants as possible from major sources."

II. What Are the Procedures and Criteria for Development of NESHAPs?

A. Why Are NESHAPs Needed?

NESHAPs are developed to control hazardous air pollutant emissions from both new and existing sources. The statute requires a NESHAP to reflect the maximum degree of reduction of hazardous air pollutant emissions that is achievable taking into consideration the cost of achieving the emission reduction, any nonair quality health and environmental impacts, and energy requirements. NESHAPs are often referred to as maximum achievable control technology (or MACT) standards.

We are required to develop MACT emission standards based on performance of the best control technologies for categories or sub-categories of major sources of hazardous air pollutants. We also can establish lower thresholds for determining which sources are major where appropriate. In addition, we may require sources emitting particularly dangerous hazardous air pollutants such as particular dioxins and furans to control those pollutants under the MACT standards for major sources.

In addition, we regulate area sources by technology-based standards if we find that these sources (individually or in the aggregate) present a threat of adverse effects to human health or the environment warranting regulation. After such a determination, we have a further choice whether to require technology-based standards based on MACT or on generally achievable control technology.

B. What Is a MACT Floor?

The CAA directs EPA to establish minimum emission standards, usually referred to as MACT floors. For existing sources in a category or subcategory with 30 or more sources, the MACT floor cannot be less stringent than the "average emission limitation achieved by the best performing 12 percent of the existing sources. * * *" For existing sources in a category or subcategory with less than 30 sources, the MACT floor cannot be less stringent than the "average emission limitation achieved by the best performing 5 sources. * * *" For new sources, the MACT floor cannot be "less stringent than the emission control that is achieved by the best controlled similar source. * * *"

We must consider in a NESHAP rulemaking whether to develop standards that are more stringent than the floor, which are referred to as "beyond-the-floor" standards. To do so, we must consider statutory criteria, such as the cost of achieving emission reduction, cost effectiveness, energy requirements, and nonair environmental implications.

Section 112(d)(2) specifies that emission reductions may be accomplished through the application of measures, processes, methods, systems, or techniques, including, but not limited to: (1) Reducing the volume of, or eliminating emissions of, such pollutants through process changes, substitution of materials, or other modifications; (2) enclosing systems or processes to eliminate emissions; (3) collecting, capturing, or treating such pollutants when released from a process, stack, storage, or fugitive emissions point; (4) design, equipment, work practice, or operational standards (including requirements for operator training or certification); or (5) any combination of the above. See section 112(d)(2).

Application of techniques (1) and (2) are consistent with the definitions of pollution prevention under the Pollution Prevention Act and the definition of waste minimization under RCRA. In addition, these definitions are in harmony with our Hazardous Waste Minimization and Combustion Strategy. These terms have particular applicability in the discussion of pollution prevention/waste minimization incentives, which were finalized at 63 FR 33782 (June 19, 1998) and which are summarized in the permitting and compliance sections of this final rule.

C. How Are NESHAPs Developed?

To develop a NESHAP, we compile available information and in some cases collect additional information about the industry, including information on emission source quantities, types and characteristics of hazardous air pollutants, pollution control technologies, data from emissions tests (e.g., compliance tests, trial burn tests) at controlled and uncontrolled facilities, and information on the costs and other energy and environmental impacts of emission control techniques. We use this information in analyzing and developing possible regulatory

[13] A subsequent Notice was published on July 18, 1996 (61 FR 37542) which corrected typographical errors in the June 4, 1996 Notice.

approaches. Of course, we are not always able to assemble the same amount of information per industry and typically base the NESHAP on information practically available.

NESHAPs are normally structured in terms of numerical emission limits. However, alternative approaches are sometimes necessary and appropriate. Section 112(h) authorizes the Administrator to promulgate a design, equipment, work practice, or operational standard, or a standard that is a combination of these alternatives.

III. How Are Area Sources and Research, Development, and Demonstration Sources Treated in This Rule?

A. Positive Area Source Finding for Hazardous Waste Combustors

1. How Are Area Sources Treated in This Rule?

In today's final rule, we make a positive area source finding pursuant to CAA section 112(c)(3) for hazardous waste burning incinerators, hazardous waste burning cement kilns, and hazardous waste burning lightweight aggregate kilns. This rule subjects both major and area sources in these three source categories to the same standards—the section 112(d) MACT standards. We make this positive area source determination because emissions from area sources subject to today's rule present a threat of adverse effects to human health and the environment. These threats warrant regulation under the section 112 MACT standards.

2. What Is an Area Source?

Area sources are sources emitting (or having the potential to emit) less than 10 tons per year of an individual hazardous air pollutant, and less than 25 tons per year of hazardous air pollutants in the aggregate. These sources may be regulated under MACT standards if we find that the sources "presen[t] a threat of adverse effects to human health or the environment (by such sources individually or in the aggregate) warranting regulation under this section." Section 112(c)(3).

As part of our analysis, we estimate that all hazardous waste burning lightweight aggregate kilns are major sources, principally due to their hydrochloric acid emissions. We also estimate that approximately 80 percent of hazardous waste burning cement kilns are major sources, again due to hydrochloric acid emissions. Only approximately 30 percent of hazardous waste burning incinerators appear to be major sources, considering only the stack emissions from the incinerator. However, major and area source status is determined by the entire facility's hazardous air pollutant emissions, so that many on-site hazardous waste incinerators are major sources because they are but one contributing source of emissions among others (sometimes many others at large manufacturing complexes) at the same facility.

3. What Is the Basis for Today's Positive Area Source Finding?

The consequences of us not making a positive area source finding in this rule would result in an undesirable bifurcated regulation. First, the CAA provides independent authority to regulate certain hazardous air pollutant emissions under MACT standards, even if the emissions are from area sources. These are the hazardous air pollutants enumerated in section 112(c)(6), and include 2,3,7,8 dichlorobenzo-p-dioxins and furans, mercury, and some specific polycyclic organic hazardous air pollutants—hazardous air pollutants regulated under this rule. See 62 FR at 24213–24214. Thus, all sources covered by today's rule would have to control these hazardous air pollutants to MACT levels, even if we were not to make a positive area source determination. Second, because all hazardous air pollutants are fully regulated under RCRA, area source hazardous waste combustors would have not only a full RCRA permit, but also (as just explained) a CAA title V permit for the section 112(c)(6) hazardous air pollutants. One purpose of this rule is to avoid the administrative burden to sources resulting from this type of dual permitting, and these burdensome consequences of not making a positive area source finding have influenced our decision that area source hazardous waste combustors "warrant regulation" under section 112(d)(2).

a. Health and Environmental Factors. Our positive area source finding is based on the threats presented by emissions of hazardous air pollutants from area sources. We find that these threats warrant regulation under the MACT standards given the evident Congressional intent for uniform regulation of hazardous waste combustion sources, as well as the common emission characteristics of these sources and amenability to the same emission control mechanisms.

As discussed in both the April 1996 proposal and May 1997 NODA, all hazardous waste combustion sources, including those that may be area sources, have the potential to pose a threat of adverse effects to human health or the environment, although some commenters disagree with this point. These sources emit some of the most toxic, bioaccumulative and persistent hazardous air pollutants—among them dioxins, furans, mercury, and organic hazardous air pollutants. As discussed in these **Federal Register** notices and elsewhere in today's final rule, potential hazardous waste combustor area sources can be significant contributors to national emissions of these hazardous air pollutants. (See 62 FR 17365 and 62 FR 24213.)

Our positive area source finding also is based on the threat posed by products of incomplete combustion. The risks posed by these hazardous air pollutants cannot be directly quantified on a national basis, because each unit emits different products of incomplete combustion in different concentrations. However, among the products of incomplete combustion emitted from these sources are potential carcinogens.[14] The potential threat posed by emissions of these hazardous air pollutants is manifest and, for several reasons, we do not believe that control of these products of incomplete combustion should be left to the RCRA omnibus permitting process. First, we are minimizing the administrative burden on sources from duplicative permitting in this rule by minimizing the extent of RCRA permitting and hence minimizing our reliance on the omnibus process. Second, we are dealing with hazardous air pollutant emissions from these sources on a national rather than a case-by-case basis. We conclude that the control of products of incomplete combustion from all hazardous waste combustors through state-of-the art organic pollution control is the best way to do so from an implementation standpoint. Finally, a basic premise of the CAA is that there are so many uncertainties and difficulties in developing effective risk-based regulation of hazardous air pollutants that the first step should be technology-based standards based on Maximum Available Control Technology. See generally S. Rep. No. 228, 101st Cong. 1st Sess. 128–32 (1990). The positive area source finding and consequent MACT controls is consistent with this primary legislative objective.

The quantitative risk assessment for the final rule did not find risk from

[14] *E.g.*, benzene, methylene chloride, hexachlorobenzene, carbon tetrachloride, vinal chloride, benzo(a)pyrene, and chlorinated dioxins and furans. Energy and Environmental Research Corp., surrogate Evaluation for Thermal Treatment Systems, Draft Report, October 1994. Also see: USEPA, "Final technical Support Document for HWC MACT Standards, Volume III: Section of MACT Standards and Technologies," July 1999.

mercury emissions from hazardous waste burning area source cement kilns to be above levels we generally consider acceptable. However, the uncertainties underlying the analysis are such that only qualitative judgments can be made. We do not believe our analysis can be relied upon to make a definitive quantitative finding about the precise magnitude of the risk. See Part Five, Section XIII for a discussion of uncertainty. Background exposures, which can be quite variable, were not considered in the quantitative assessment and are likely to increase the risk from incremental exposures to mercury from area source cement kilns. Commenters, on the other hand, believed that cement kilns did not pose significant risk and questioned our risk estimates made in the April 1996 NPRM and May 1997 NODA. However, taking into account the uncertainty of our mercury analysis and the likelihood of background exposures, a potential for risk from mercury may exist. Furthermore, the information available concerning the adverse human health effects of mercury, along with the magnitude of the emissions of mercury from area source cement kilns, also indicate that a threat of adverse effects is presumptive and that a positive area source finding is warranted.

b. Other Reasons Warranting Regulation under Section 112. Other special factors indicate that MACT standards are warranted for these sources.

The first reason is Congress's, our, and the public's strong preference for similar, if not identical, regulation of all hazardous waste combustors. Area sources are currently regulated uniformly under RCRA, with no distinction being made between smaller and larger emitters. This same desire for uniformity is reflected in the CAA. CAA section 112(n)(7) directs the Agency, in its regulation of HWCs under RCRA, to "take into account any regulations of such emissions which are promulgated under such subtitle (*i.e.*, RCRA) and shall, to the maximum extent practicable and consistent with the provisions of this section, ensure that the requirements of such subtitle and this section are consistent." Congress also dealt with these sources as a single class by excluding hazardous waste combustion units regulated by RCRA permits from regulation as municipal waste combustors under CAA section 129(g)(1). Thus, a strong framework in both statutes indicates that air emissions from all hazardous waste combustors should be regulated under a uniform approach. Failure to adopt such a uniform approach would therefore be inconsistent with Congressional intent as expressed in both the language and the structure of RCRA and the CAA. Although many disagree, several commenters support the approach to apply uniform regulations for all hazardous waste combustors and assert that it is therefore appropriate and necessary to make the positive area source finding.

Second, a significant number of hazardous waste combustors could plausibly qualify as area sources by the compliance date through emissions reductions of one or more less dangerous hazardous air pollutants, such as total chlorine. We conclude it would be inappropriate to exclude from CAA 112(d) regulation and title V permitting a significant portion of the sources contributing to hazardous air pollutant emissions, particularly nondioxin products of incomplete combustion should this occur.

Third, the MACT controls identified for major sources are reasonable and appropriate for potential area sources. The emissions control equipment (and where applicable, feedrate control) defined as floor or beyond-the-floor control for each source category is appropriate and can be installed and operated at potential area sources. There is nothing unique about the types and concentrations of emissions of hazardous air pollutants from any class of hazardous waste combustors that would make MACT controls inappropriate for that particular class of hazardous waste combustors, but not the others. Commenters also raised the issue of applying generally available control technologies (GACT), in lieu of MACT, to area sources. Consideration of GACT lead us to the conclusion that GACT would likely involve the same types and levels of control as we identified for MACT. We believe GACT would be the same as MACT because the standards of this rule, based on MACT, are readily achievable, and therefore would also be determined to be generally achievable, *i.e.*, GACT.

Finally, we note that the determination here is unique to these RCRA sources, and should not be viewed as precedential for other CAA sources. In the language of the statute, there are special reasons that these RCRA sources warrant regulation under section 112(d)(2)—and so warrant a positive area source finding—that are not present for usual CAA sources. These reasons are discussed above—the Congressional desire for uniform regulation and our desire (consistent with this Congressional objective) to avoid duplicative permitting of these sources wherever possible. We repeat, however, that the positive area source determination here is not meant as a precedent outside the dual RCRA/CAA context.

B. How Are Research, Development, and Demonstration (RD&D) Sources Treated in This Rule?

Today's rule excludes research, development, and demonstration sources from the hazardous waste burning incinerator, cement kiln, and lightweight aggregate kiln source categories. We discuss below the statutory mandate to give special consideration to research and development (R&D) sources, an Advanced Notice of Proposed Rulemaking to list R&D facilities that we published in 1997, and qualifications for exclusion of R&D sources from the hazardous waste combustor source categories.

1. Why Does the CAA Give Special Consideration to Research and Development (R&D) Sources?

Section 112(c)(7) of the Clean Air Act requires EPA to "establish a separate category covering research or laboratory facilities, as necessary to assure the equitable treatment of such facilities." Congress included such language in the Act because it was concerned that research and laboratory facilities should not arbitrarily be included in regulations that cover manufacturing operations. The Act defines a research or laboratory facility as "any stationary source whose primary purpose is to conduct research and development into new processes and products, where such source is operated under the close supervision of technically trained personnel and is not engaged in the manufacture of products for commercial sale in commerce, except in a *de minimis* manner."

We interpret the Act as requiring the listing of R&D major sources as a separate category to ensure equitable treatment of such facilities. Language in the Act specifying special treatment of R&D facilities (section 112(c)(7)), along with language in the legislative history of the Act, suggests that Congress considered it inequitable to subject the R&D facilities of an industry to a standard designed for the commercial production processes of that industry. The application of such a standard may be inappropriate because the wide range of operations and sizes of R&D facilities. Further, the frequent changes in R&D operations may be significantly different from the typically large and continuous production processes.

We have no information indicating that there are R&D sources, major or

area, that are required to be listed and regulated, other than those associated with sources already included in listed source categories listed today. Although we are not aware of other R&D sources that need to be added to the source category list, such sources may exist, and we requested information about them in an Advance Notice of Proposed Rulemaking, as discussed in the next section.

2. When Did EPA Notice Its Intent To List R&D Facilities?

In May 1997 (62 FR 25877), we provided advanced notice that we were considering whether to list R&D facilities. We requested public comments and information on the best way to list and regulate such sources. Comment letters were received from industry, academic representatives, and governmental entities. After we compile additional data, we will respond to these comments in that separate docket. As a result we are not deciding how to address the issue in today's rule. The summary of comments and responses will be one part of the basis for our future decision whether to list R&D facilities as a source category of hazardous air pollutants.

3. What Requirements Apply to Research, Development, and Demonstration Hazardous Waste Combustor Sources?

This rule excludes research, development, and demonstration sources from the hazardous waste incinerator, cement kiln, or lightweight aggregate kiln source categories and therefore from compliance with today's regulations. We are excluding research, development, and demonstration sources from those source categories because the emission standards and compliance assurance requirements for those source categories may not be appropriate. The operations and size of a research, development, and demonstration source may be significantly different from the typical hazardous waste incinerator that is providing ongoing waste treatment service or hazardous waste cement kiln or hazardous waste lightweight aggregate kiln that is producing a commercial product as well as providing ongoing waste treatment.

We also are applying the exclusion to demonstration sources because demonstration sources are operated more like research and development sources than production sources. Thus, the standards and requirements finalized today for production sources may not be appropriate for demonstration sources. Including demonstration sources in the exclusion is consistent with our current regulations for hazardous waste management facilities. See § 270.65 providing opportunity for special operating permits for research, development, and demonstration sources that use an innovative and experimental hazardous waste treatment technology or process.

To ensure that research, development, and demonstration sources are distinguished from production sources, we have drawn from the language in section 112(c)(7) to define a research, development, and demonstration source. Specifically, these are sources engaged in laboratory, pilot plant, or prototype demonstration operations: (1) Whose primary purpose is to conduct research, development, or short-term demonstration of an innovative and experimental hazardous waste treatment technology or process; and (2) where the operations are under the close supervision of technically-trained personnel.[15]

In addition, today's rule limits the exclusion to research, development, and demonstration sources that operate for not longer than one year after first processing hazardous waste, unless the Administrator grants a time extension based on documentation that additional time is needed to perform research development, and demonstration operations. We believe that this time restriction will help distinguish between research, development, and demonstration sources and production sources. This time restriction draws from the one-year time restriction (unless extended on a case-by-case basis) currently applicable to hazardous waste research, development, and demonstration sources under § 270.65.

The exclusion of research, development, and demonstration sources applies regardless of whether the sources are located at the same site as a production hazardous waste combustor that is subject to the MACT standards finalized today. A research, development, and demonstration source that is co-located at a site with a production source still qualifies for the exclusion. A research, development, and demonstration source co-located with a production source is nonetheless expected to experience the type and range of operations and be of the size typical for other research, development, and demonstration sources.

Finally, hazardous waste research, development, and demonstration sources remain subject to RCRA permit requirements under § 270.65, which direct the Administrator to establish permit terms and conditions that will assure protection of human health and the environment.

Although we did not propose this exclusion specifically for hazardous waste combustor research, development, and demonstration sources, the exclusion is an outgrowth of the May 1997 notice discussed above. In that notice we explain that we interpret the CAA as requiring the listing of research and development major sources as a separate category to ensure equitable treatment of such facilities. A commenter on the April 1996 hazardous waste combustor NPRM questioned whether we intended to apply the proposed regulations to research and development sources. We did not have that intent, and in response are finalizing today an exclusion of research, development, and demonstration sources from the hazardous waste incinerator, hazardous waste burning cement kiln, and hazardous waste burning lightweight aggregate kiln source categories.

IV. How Is RCRA's Site-Specific Risk Assessment Decision Process Impacted by This Rule?

RCRA Sections 3004(a) and (q) mandate that standards governing the operation of hazardous waste combustion facilities be protective of human health and the environment. To meet this mandate, we developed national combustion standards under RCRA, taking into account the potential risk posed by direct inhalation of the emissions from these sources.[16] With advancements in the assessment of risk since promulgation of the original national standards (*i.e.*, 1981 for incinerators and 1991 for boilers and industrial furnaces), we recognized in the 1993 Hazardous Waste Minimization and Combustion Strategy that additional risk analysis was appropriate. Specifically, we noted that the risk posed by indirect exposure (e.g., ingestion of contamination in the food chain) to long-term deposition of metals,

[15] The statute also qualifies that research and development sources do not engage in the manufacture of products for commercial sale except in a *de minimis* manner. Although this qualification is appropriate for research and development sources, engaged in short-term demonstration of an innovative or experimental treatment technology or process may produce products for use in commerce. For example, a cement kiln engaged in a short-term demonstration of an innovative process may nonetheless produce marketable clinker in other than *de minimis* quantities. Consequently, we are not including this qualification in the definition of a research, development, and demonstration source.

[16] See No CFR part 264, subpart O for incinerator standards and 40 CFR part 266, subpart H for BIF standards.

dioxin/furans and other organic compounds onto soils and surface waters should be assessed in addition to the risk posed by direct inhalation exposure to these contaminants. We also recognized that the national assessments performed in support of the original hazardous waste combustor standards did not take into account unique and site-specific considerations which might influence the risk posed by a particular source. Therefore, to ensure the RCRA mandate was met on a facility-specific level for all hazardous waste combustors, we strongly recommended in the Strategy that site-specific risk assessments (SSRAs), including evaluations of risk resulting from both direct and indirect exposure pathways, be conducted as part of the RCRA permitting process. In those situations where the results of a SSRA showed that a facility's operations could pose an unacceptable risk (even after compliance with the RCRA national regulatory standards), additional risk-based, site-specific permit conditions could be imposed pursuant to RCRA's omnibus authority (section 3005(c)(3)).

Today's MACT standards were developed pursuant to section 112(d) of the CAA, which does not require a concurrent risk evaluation of those standards. To determine if the MACT standards would satisfy the RCRA protectiveness mandate in addition to the requirements of the CAA, we conducted a national RCRA evaluation of both direct and indirect risk as part of this rulemaking. If we found the MACT standards to be sufficiently protective so as to meet the RCRA mandate as well, we could consider modifying our general recommendation that SSRAs be conducted for all hazardous waste combustors, thereby lessening the regulatory burden to both permitting authorities and facilities.

In this section, we discuss: The applicability of both the RCRA omnibus authority and the SSRA policy to hazardous waste combustors subject to today's rulemaking; the implementation of the SSRA policy; the relationship of the SSRA policy to the residual risk requirement of section 112(f) of the CAA; and public comments received on these topics. A discussion of the national risk characterization methodology and results is provided in Part Five, Section XIII of today's notice.

A. What Is the RCRA Omnibus Authority?

Section 3005(c)(3) of RCRA (codified at 40 CFR 270.32(b)(2)) requires that each hazardous waste facility permit contain the terms and conditions necessary to protect human health and the environment. This provision is commonly referred to as the "omnibus authority" or "omnibus provision." It is the means by which additional site-specific permit conditions may be incorporated into RCRA permits should such conditions be necessary to protect human health and the environment.[17] SSRAs have come to be used by permitting authorities as a quantitative basis for making omnibus determinations for hazardous waste combustors.

In the April 1996 NPRM and May 1997 NODA, we discussed the RCRA omnibus provision and its relation to the new MACT standards. Commenters question whether the MACT standards supersede the omnibus authority with respect to hazardous waste combustor air emissions. Other commenters agree in principle with the continued applicability of the omnibus authority after promulgation of the MACT standards. These commenters recognize that there may be unique conditions at a given site that may warrant additional controls to those specified in today's notice. For those sources, the commenters acknowledge that permit writers must retain the legal authority to place additional operating limitations in a source's permit.

As noted above, the omnibus provision is a RCRA statutory requirement and does not have a CAA counterpart. The CAA does not override RCRA. Each statute continues to apply to hazardous waste combustors unless we determine there is duplication and use the RCRA section 1006(b) deferral authority to create a specific regulatory exemption.[18] Promulgation of the MACT standards, therefore, does not duplicate, supersede, or otherwise modify the omnibus provision or its applicability to sources subject to today's rulemaking. As indicated in the April 1996 NPRM, a RCRA permitting authority (such as a state agency) has the responsibility to supplement the national MACT standards as necessary, on a site-specific basis, to ensure adequate protection under RCRA. We recognize that this could result in a situation in which a source may be subject to emission standards and operating conditions under two regulatory authorities (*i.e.*, CAA and RCRA). Although our intent, consistent with the integration provision of RCRA section 1006(b), is to avoid regulatory duplication to the maximum extent practicable, we may not eliminate RCRA requirements if a source's emissions are not protective of human health and the environment when complying with the MACT standards.[19]

B. How Will the SSPA Policy Be Applied and Implemented in Light of This Mandate?

1. Is There a Continuing Need for Site-Specific Risk Assessments?

As stated previously, EPA's Hazardous Waste Minimization and Combustion Strategy recommended that SSRAs be conducted as part of the RCRA permitting process for hazardous waste combustors where necessary to protect human health and the environment. We intended to reevaluate this policy once the national hazardous waste combustion standards had been updated. We view today's MACT standards as more stringent than those earlier standards for incinerators, cement kilns and lightweight aggregate kilns. To determine if the MACT standards as proposed in the April 1996 NPRM would satisfy the RCRA mandate to protect human health and the environment, we conducted a national evaluation of both human health and ecological risk. That evaluation, however, did not quantitatively assess the proposed standards with respect to mercury and nondioxin products of incomplete combustion. This was due to a lack of adequate information regarding the behavior of mercury in the environment and a lack of sufficient emissions data and parameter values (*e.g.*, bioaccumulation values) for nondioxin products of incomplete combustion. Since it was not possible to suitably evaluate the proposed standards for the potential risk posed by mercury and nondioxin products of incomplete combustion, we elected in the April 1996 NPRM to continue recommending that SSRAs be conducted as part of the permitting process until we could conduct a further assessment once final MACT standards are promulgated and implemented.

Although some commenters agree with this approach, a number of other commenters question the necessity of a quantitative nondioxin product of incomplete combustion assessment to demonstrate RCRA protectiveness of the MACT standards. These commenters

[17] The risk-based permit conditions are in addition to those conditions required by the RCRA national regulatory standards for hazardous waste combustors (*e.g.*, general facility requirements).

[18] The risk-based permit conditions are in addition to those conditions required by the RCRA national regulatory standards for hazardous waste combustors (*e.g.*, general facility requirements).

[19] RCRA section 1006(b) authorizes deferral of RCRA provisions to other EPA-implemented authorities provided, among other things, that key RCRA policies and protections are not sacrificed. See *Chemical Waste Management* v. *EPA*, 976 F. 2d 2, 23, 25 (D.C. Cir. 1992).

assert that existing site-specific assessments demonstrate that emissions of nondioxin products of incomplete combustion are unlikely to produce significant adverse human health effects. However, we do not agree that sufficient SSRA information exists to conclude that emissions from these compounds are unlikely to produce significant adverse effects on human health and the environment on a national basis. First, only a limited number of completed SSRAs are available from which broader conclusions can be drawn. Second, nondioxin products of incomplete combustion emissions can vary widely depending on the type of combustion unit, hazardous waste feed and air pollution control device used. Third, a significant amount of uncertainty exists with respect to identifying and quantifying these compounds. Many nondioxin products of incomplete combustion cannot be characterized by standard analytical methodologies and are unaccounted for by standard emissions testing.[20] (On a site-specific basis, uncharacterized nondioxin products of incomplete combustion are typically addressed by evaluating the total organic emissions.) Fourth, nondioxin products of incomplete combustion can significantly contribute to the overall risk posed by a particular facility. For example, in the Waste Technologies Industries incinerator's SSRA, nondioxin organics were estimated to contribute approximately 30% of the total cancer risk to the most sensitive receptor located in the nearest subarea to the facility.[21] Fifth, national risk management decisions concerning the protectiveness of the MACT standards must be based on data that are representative of the hazardous waste combustors subject to today's rulemaking. We do not believe that the information afforded by the limited number of SSRAs now available is sufficiently complete or representative to render a national decision.[22]

Some commenters recommend discontinuing conducting SSRAs altogether. Other commenters, however, advocate continuing to conduct SSRAs, where warranted, as a means of addressing uncertainties inherent in the national risk evaluation and of addressing unique, site-specific circumstances not considered in the assessment.

In developing the national risk assessment for the final MAC standards, we expanded our original analysis to include a quantitative assessment of mercury patterned after the recently published Mercury Study Report to Congress.[23] We were unable to perform a similar assessment of nondioxin products of incomplete combustion emissions because of continuing data limitations for these compounds, despite efforts to collect additional data since publication of the April 1996 NPRM . Thus, we conclude that sufficient data are not available to quantitatively assess the potential risk from these constituents on a national level as part of today's rulemaking.

Given the results of the final national risk assessment for other hazardous air pollutants, we generally anticipate that sources complying with the MACT standards will not pose an unacceptable risk to human health or the environment. However, we cannot make a definitive finding in this regard for all hazardous waste combustors subject to today's MACT standards for the reasons discussed.

First, as discussed above, the national risk evaluation did not include an assessment of the risk posed by nondioxin products of incomplete combustion. As reflected in the Waste Technologies Industries SSRA, these compounds can significantly contribute to the overall risk posed by a hazardous waste combustor. Without a quantitative evaluation of these compounds, we cannot reliably predict whether the additional risk contributed by nondioxin products of incomplete combustion would or would not result in an unacceptable increase in the overall risk posed by hazardous waste combustors nationally.

Second, the quantitative mercury risk analysis conducted for today's rulemaking contains significant uncertainties. These uncertainties limit the use of the analysis for drawing quantitative conclusions regarding the risks associated with the national mercury MACT standard. Among others, the uncertainties include an incomplete understanding of the fate and transport of mercury in the environment and the biological significance of exposures to mercury in fish. (See Part Five, Section XIII.) Given these uncertainties, we believe that conducting a SSRA, which will assist a permit writer to reduce uncertainty on a site-specific basis, may be still warranted in some cases.[24] As the science regarding mercury fate and transport in the environment and exposure improves, and greater certainty is achieved in the future, we may be in a better position from which to draw national risk management conclusions regarding mercury risk.

Third, we agree with commenters who indicated that, by its very nature, the national risk assessment, while comprehensive, cannot address unique, site-specific risk considerations.[25] As a result of these considerations, a separate analysis or "risk check" may be necessary to verify that the MACT standards will be adequately protective under RCRA for a given hazardous waste combustor.

Thus, we are recommending that for hazardous waste combustors subject to the Phase I final MACT standards, permitting authorities should evaluate the need for a SSRA on a case-by-case basis.[26] SSRAs are not anticipated to be necessary for every facility, but should be conducted for facilities where there is some reason to believe that operation

[20] USEPA, "Development of a Hazardous Waste Incinerator Target Analyte List of Products of Incomplete Combustion" EPA-600/R-98-076, 1998.

[21] The total cancer risk for this receptor was 1 x 10E-6. The results derived for the Waste Technologies Industries incinerator's SSRA are a combination of measurements and conservative estimates of stack and fugitive emissions, which were developed in tandem with an independent external peer review. USEPA, "Risk Assessment for the Waste Technologies Industries Hazardous Waste Incineration Facility (East Livepool, Ohio)" EPA-905-R97-002.

[22] Since publication of the April 1996 NPRM, we have expanded our national risk evaluation of the other hazardous waste combustor emissions (*e.g.*, metals) from 11 facilities to 76 facilities assessed for today's final rulemaking. The 76 facilities were selected using a stratified random sampling approach that allowed for a 90 percent probability of including at least one "high risk" facility. However, this larger set of facility assessments does not include an evaluation nondioxin products of incomplete combustion. See Part Five, Section XIII for further discussion.

[23] USEPA, "Mercury Study Report to Congress, Volume III: Fate and Transport of Mercury in the Environment." EPA 452/R-97-005, December 1997.

[24] An example of the possible reduction in uncertainty which may be derived through the performance of a SSRA includes the degree of conversion of mercury to methyl mercury in water bodies. Due to the wide range of chemical and physical properties associated with surface water bodies, there appears to be a great deal of variability concerning mercury methylation. In conducting a SSRA, a risk assessor may choose to use a default value to represent the percentage of mercury assumed to convert to methyl mercury. Conversely, the risk assessor may choose to reduce the uncertainty in the analysis by deriving a site-specific value using actual surface water data. Chemical and physical properties that may influence mercury methylation include, but are not limited to: dissolved oxygen content, pH, dissolved organic content, salinity, nutrient concentrations, and temperature. See USEPA, "Human Health Risk Assessment Protocol for Hazardous Waste Combustion Facilities," EPA-530-D-98-001A, External Peer Review Draft, 1998.

[25] Including for example, unusual terrain or dispersion features, particularly sensitive ecosystems, unusually high contaminant background concentrations, and mercury methylation rates in surface water.

[26] We continue to recommend that for those HWCs not subject to the Phase I final MACT standards, as SSRA should be conducted as part of the RCRA permitting process.

in accordance with the MACT standards alone may not be protective of human health and the environment. If a SSRA does demonstrate that operation in accordance with the MACT standards may not be protective of human health and the environment, permitting authorities may require additional conditions as necessary. We consider this an appropriate course of action to ensure protection of human health and the environment under RCRA, given current limits to our scientific knowledge and risk assessment tools.

2. How Will the SSRA Policy Be Implemented?

Some commenters suggest that EPA provide regulatory language specifically requiring SSRAs. Adequate authority and direction already exists to require SSRAs on a case-by-case basis through current regulations and guidance (none of which are being reconsidered, revised or otherwise reopened in today's rulemaking). The omnibus provision (codified in 40 CFR 270.32(b)(2)) directs the RCRA permitting authority to include terms and conditions in the RCRA permit as necessary to ensure protection of human health and the environment. Under 40 CFR 270.10(k), the permitting authority may require a permittee or permit applicant to submit information where the permitting authority has reason to believe that additional permit conditions may be warranted under § 270.32(b)(2). Performance of a SSRA is a primary, although not exclusive mechanism by which the permitting authority may develop the information necessary to make the determination regarding what, if any, additional permit conditions are needed for a particular hazardous waste combustor. Thus, for hazardous waste combustors, the information required to establish permit conditions could include a SSRA, or the necessary information required to conduct a SSRA.

In 1994, we provided guidance concerning the appropriate methodologies for conducting hazardous waste combustor SSRAs.[27] This guidance was updated in 1998 and released for publication as an external peer review draft.[28] We anticipate that use of the updated and more detailed guidance will result in a more standardized assessments for hazardous waste combustors.

To implement the RCRA SSRA policy, we expect permitting authorities to continue evaluating the need for an individual hazardous waste combustor risk assessment on a case-by-case basis. We provided a list of qualitative guiding factors in the April 1996 NPRM to assist in this determination. One commenter is concerned that the subjectivity inherent in the list of guiding factors might lead to inconsistencies when determining if a SSRA is necessary and suggested that we provide additional guidance on how the factors should be used. We continue to believe that the factors provided, although qualitative, generally are relevant to the risk potential of hazardous waste combustors and therefore should be considered when deciding whether or not a SSRA is necessary. However, as a practical matter, the complexity of the multipathway risk assessment methodology precludes conversion of these qualitative factors into more definitive criteria. We will continue to compile data from SSRAs to determine if there are any trends which would assist in developing more quantitative or objective criteria for deciding on the need for a SSRA at any given site. In the interim, SSRAs provide the most credible basis for comparisons between risk-based emission limits and the MACT standards.

The commenter further suggests that EPA emphasize that the factors should be considered collectively due to their complex interplay (*e.g.*, exposure is dependent on fate and transport which is dependent on facility characteristics, terrain, meteorological conditions, etc.). We agree with the commenter. The elements comprising multipathway risk assessments are highly integrated. Thus, the considerations used in determining if a SSRA is necessary are similarly interconnected and should be evaluated collectively.

The guiding factors as presented in the April 1996 NPRM contained several references to the proposed MACT standards. As a result, we modified and updated the list to reflect promulgation of the final standards and to re-focus the factors to specifically address the types of considerations inherent in determining if a SSRA is necessary. The revised guiding factors are: (1) Particular site-specific considerations such as proximity to receptors, unique dispersion patterns, *etc.*; (2) identities and quantities of nondioxin products of incomplete combustion most likely to be emitted and to pose significant risk based on known toxicities (confirmation of which should be made through emissions testing); (3) presence or absence of other off-site sources of pollutants in sufficient proximity so as to significantly influence interpretation of a facility-specific risk assessment; (4) presence or absence of significant ecological considerations, such as high background levels of a particular contaminant or proximity of a particularly sensitive ecological area; (5) volume and types of wastes being burned, for example wastes containing highly toxic constituents both from an acute and chronic perspective; (6) proximity of schools, hospitals, nursing homes, day care centers, parks, community activity centers that would indicate the presence of potentially sensitive receptors; (7) presence or absence of other on-site sources of hazardous air pollutants so as to significantly influence interpretation of the risk posed by the operation of the source in question; and (8) concerns raised by the public. The above list of qualitative guiding factors is not intended to be all-inclusive; we recognize that there may be other factors equally relevant to the decision of whether or not a SSRA is warranted in particular situations.

With respect to existing hazardous waste combustion sources, we do not anticipate a large number of SSRAs will need to be performed after the compliance date of the MACT standards. SSRAs already have been initiated for many of these sources. We strongly encourage facilities and permitting authorities to ensure that the majority of those risk assessments planned or currently in progress be completed prior to the compliance date of the MACT standards. The results of these assessments can be used to provide a numerical baseline for emission limits. This baseline then can be compared to the MACT limits to determine if site-specific risk-based limits are appropriate in addition to the MACT limits for a particular source.

Several commenters suggest that completed risk assessments should not have to be repeated. We do not anticipate repeating many risk assessments. It should be emphasized that changes to comply with the MACT standards should not cause an increase in risk for the vast majority of the facilities given that the changes, in all probability, will be the addition of pollution control equipment or a reduction in the hazardous waste being burned. For those few situations in which the MACT requirements might result in increased potential risk for a particular facility due to unique site-specific considerations, the RCRA permit writer, however, may determine

[27] USEPA, "Guidance for Performing Screening Level Risk Analyses at Combustion Facilities Burning Hazardous Wastes" Draft, April 1994; USEPA, "Implementation of Exposure Assessment Guidance for RCRA Hazardous Waste Combustion Facilities" Draft, 1994.

[28] USEPA, "Human Health Risk Assessment Protocol for Hazardous Waste Combustion Facilities" EPA-520-D-98-001A, B&C, External Peer Review Draft, 1998.

that a risk check of the projected MACT emission rates is in order.[29] Should the results of the risk check demonstrate that compliance with the MACT requirements does not satisfy the RCRA protectiveness mandate, the permitting authority should invoke the omnibus provision to impose more stringent, site-specific, risk-based permit conditions as necessary to protect human health and the environment.

With respect to new hazardous waste combustors and existing combustors for which a SSRA has never been conducted, we recommend that the decision of whether or not a SSRA is necessary be made prior to the approval of the MACT comprehensive performance test protocol, thereby allowing for the collection of risk emission data at the same time as the MACT performance testing, if appropriate (see Part Five, Section V). In those instances where it has been determined a SSRA is appropriate, the assessment should take into account both the MACT standards and any relevant site-specific considerations.

We emphasize that the incorporation of site-specific, risk-based permit conditions into a permit is not anticipated to be necessary for the vast majority of hazardous waste combustors. Rather, such conditions would be necessary only if compliance with the MACT requirements is insufficient to protect human health and the environment pursuant to the RCRA mandate and if the resulting risk-based conditions are more stringent than those required under the CAA. Risk-based permit conditions could include, but are not limited to, more stringent emission limits, additional operating parameter limits, waste characterization and waste tracking requirements.

C. What Is the Difference Between the RCRA SSRA Policy and the CAA Residual Risk Requirement?

Section 112(f) of the CAA requires the Agency to conduct an evaluation of the risk remaining for a particular source category after compliance with the MACT standards. This evaluation of residual risk must occur within eight years of the promulgation of the MACT standards for each source category. If it is determined that the residual risk is unacceptable, we must impose additional controls on that source category to protect public health with an ample margin of safety and to prevent adverse environmental effects.

Our SSRA policy is intended to address the requirements of the RCRA protectiveness mandate, which are different from those provided in the CAA. For example, the omnibus provision of RCRA requires that the protectiveness determination be made on a permit-by-permit or site-specific basis. The CAA residual risk requirement, conversely, requires a determination be made on a source category basis. Further, the time frame under which the RCRA omnibus determination is made is more immediate; the SSRA is generally conducted prior to final permit issuance. The CAA residual risk determination, on the other hand, is made at any time within the eight-year time period after promulgation of the MACT standards for a source category. Thus, the possibility of a future section 112(f) residual risk determination does not relieve RCRA permit writers of the present obligation to determine whether the RCRA protectiveness requirement is satisfied. Finally, nothing in the RCRA national risk evaluation for this rule should be taken as establishing a precedent for the nature or scope of any residual risk procedure under the CAA.

Part Four: What Is the Rationale for Today's Final Standards?

I. Emissions Data and Information Data Base

A. How Did We Develop the Data Base for This Rule?

To support the emissions standards in today's rule, we use a "fourth generation" data base that considers and incorporates public comments on previous versions of the data base. This final data base[24] summarizes emissions data and ancillary information on hazardous waste combustors that was primarily extracted from incinerator trial burn reports and cement and lightweight aggregate kiln Certification of Compliance test reports prepared as part of the compliance process for the current regulatory standards. Ancillary information in the data base includes general facility information (*e.g.*, location) process operating data (*e.g.*, waste, fuel, raw material compositions, feed rates), and facility equipment design and operational information (*e.g.*, air pollution control device temperatures).

The data base supporting the April 1996 proposal was the initial data base released for public comment.[25] We received a substantial number of public comments on this data base including identification of data errors and submission of many new trial burn and compliance test reports not already in the data base. Subsequently, we developed a "second generation" data base addressing these comments and, on January 7, 1997, published a NODA soliciting public comment on the updated data base. Numerous industry stakeholders submitted comments on the second generation data base. The data base was revised again to accommodate these public comments resulting in a "third generation" data base. We also published for comment a document indicating how specific public comments submitted in response to the January NODA were addressed.[26] In the May 1997 NODA, we used this third generation data base to re-evaluate the MACT standards. Since the completion of the third generation data base, we have incorporated additional data base comments and new test reports resulting in the "fourth generation" data base. This final data base is used to support all MACT analyses discussed in today's rule. Compared to the changes made to develop the third generation data base, those changes made in the fourth generation are relatively minor. The majority of these changes (e.g., incorporating a few trial burn reports and incorporating suggested revisions to the third generation data base) were in response to public comments received to May 1997 NODA.

B. How Are Data Quality and Data Handling Issues Addressed?

We selected approaches to resolve several data quality and handling issues regarding: (1) Data from sources no longer burning hazardous waste; (2) assigning values to reported nondetect measurements; (3) data generated under normal conditions versus worst-case compliance conditions; and (4) use of imputation techniques to fill in missing or unavailable data. This section discusses our selected approaches to these four issues.

[29] For example, hazardous waste burning cement kilns that previously monitored hydrocarbons in the main stack may elect to install a mid-kiln sampling port for carbon monoxide or hydrocarbon monitoring to avoid restrictions on hydrocarbon levels in the main stack. Thus, their stack hydrocarbon emissions may increase

[24] USEPA, "Final Technical Support Document for HWC MACT Standards, Volume II: HWC Emissions Database," July 1999.

[25] USEPA, "Draft Technical Support Document for HWC MACT Standards, Volume II: HWC Emissions Database," February 1996.

[26] See USEPA, "Draft Report of Revisions to Hazardous Waste Combustor Database Based on Public Comments Submitted in Response to the January 7, 1997 Notice of Data Availability (NODA)," May 1997.

1. How Are Data From Sources No Longer Burning Hazardous Waste Handled?

Data and information from sources no longer burning hazardous waste are not considered in the MACT standards evaluations promulgated today. We note that some facilities have recently announced plans to cease burning hazardous waste. Because we cannot continually adjust our data base and still finalize this rulemaking, we concluded revisions to the data base in early 1998. Announcements or actual facility changes after that date simply could not be incorporated.

Numerous commenters responded to our request for comment on the appropriate approach to handle emissions data from sources no longer burning hazardous waste. In the April 1996 proposal, we considered all available data, including data from sources that had since ceased waste burning operations. However, in response to comments to the April 1996 NPRM, in the May 1997 NODA we excluded data from sources no longer burning hazardous waste and reevaluated the MACT floors with the revised data base. Of the data included in the fourth generation data base, the number of sources that have ceased waste burning operations include 18 incineration facilities comprising 18 sources; eight cement kiln facilities comprising 12 sources; and one lightweight aggregate kiln facility comprising one source.

Several commenters support the inclusion in the MACT analyses of data from sources no longer burning hazardous waste. They believe the performance data from these sources are representative of emissions control achievable when burning hazardous waste because the data were generated under compliance testing conditions. Other commenters suggest that data from sources no longer burning hazardous waste should be excluded from consideration when conducting MACT floor analyses to ensure that the identified MACT floor levels are achievable.

The approach we adopt today is identical to the one we used for the May 1997 NODA. Rather than becoming embroiled in a controversy over continued achievability of the MACT standards, we exercise our discretion and use a data base consisting of only facilities now operating (at least as of the data base finalization date). Ample data exist to support setting the MACT standards without using data from facilities that no longer burn hazardous waste. To the extent that some previous data from facilities not now burning hazardous waste still remain in the data base, we ascribe to the view that these data are representative of achievable emissions control and can be used.

2. How Are Nondetect Data Handled?

In today's rule, as in the May 1997 NODA, we evaluated nondetect values, extracted from compliance test reports and typically associated with feedstream input measurements rather than emissions concentrations, as concentrations that are present at one-half the detection limit. In the proposal, we assumed that nondetect analyses were present at the value of the full detection limit.

Some commenters support our approach to assume that nondetect values are present at one-half the detection limit. The commenter states that this approach is consistent with the data analysis techniques used in other EPA environmental programs such as in the evaluation of groundwater monitoring data. Other commenters oppose treating nondetect values at one-half the detection limit, especially for dioxins/furans because Method 23 for quantitating stack emissions states that nondetect values for congeners be treated as zero when calculating total congeners and the toxicity equivalence quotient for dioxins/furans. As explained in the NODA, the assumption that nondetect measurements are present at one-half the reported detection limit is more technically and environmentally conservative and increases our confidence that standards and risk findings are appropriate. Further, we considered assuming that nondetect values were present at the full detection limit, but found that there were no significant differences in the MACT data analysis results.[27] Therefore, in today's rule, we assume nondetect measurements are present at one-half the detection limit.

3. How Are Normal Versus Worst-Case Emissions Data Handled?

The majority of the available emissions data for all of the hazardous air pollutants except mercury can be considered worst-case because they were generated during RCRA compliance testing. Because limits on operating parameters are established based on compliance test operations, sources generally operate during compliance testing under worst-case conditions to account for variability in operations and emissions. However, the data base also contains some normal data for these hazardous air pollutants. Normal data include those where hazardous waste was burned, but neither spiking of the hazardous waste with metals or chlorine nor operation of the combustion unit and emission control equipment under detuned conditions occurred.

In the MACT analyses supporting today's rule, normal data were not used to identify or define MACT floor control, with the exception of mercury, as discussed below. This approach is identical to the one used in the May 1997 NODA. 62 FR 24216.

Several commenters support the use of normal emissions data in defining MACT controls because the effect of ignoring the potentially lower emitters from these sources would skew the analysis to higher floor results. Other commenters oppose the use of normal data because they would not be representative of emissions under compliance test conditions—the conditions these same sources will need to operate under during MACT performance tests to establish limits on operating conditions.[28]

We conclude that it is inappropriate to perform the MACT floor analysis for a particular hazardous air pollutant using emissions data that are a mixture of normal and worst-case data. The few normal emissions data would tend to dominate the identification of best performing sources while not necessarily being representative of the range of normal emissions. Because the vast majority of our data is based on worst-case compliance testing, the definition of floor control is based on worst-case data.[29] Using worst-case emissions data to establish a MACT

[27] Using dioxins and furans as an example, for those sources using MACT control, this difference is no more than approximately 10 percent of the standard. USEPA, "Final Technical Support Document for HWC MACT Standards, Volume III: Selection of MACT Standards and Technologies," July 1999.

[28] These commenters are concerned that, if the standards were based on normal emissions data, sources would be inappropriately constrained to emissions that are well below what is currently normal. This is because of the double ratcheting effect of the compliance regime whereby a source must first operate below the standard during compliance testing, and then again operate below compliance testing levels (and associated operating parameters) to maintain day-to-day compliance.

[29] We considered adjusting the emissions data to account for spiking to develop a projected normal emissions data base. However, we conclude that this is problematic and have not done so. For example, it is difficult to project (lower) emissions from semivolatile metal-spiked emissions data given that system removal efficiency does not correlate linearly with semivolatile metal feedrate. In addition, we did not know for certain whether some data were spiked. Thus, we would have to use either a truncated data base of despiked data or a mixed data base of potentially spiked data and despiked data, neither of which would be fully satisfactory.

floor also helps account for emissions variability, as discussed in Section V.D. below.

Sources did not generally spike mercury emissions during RCRA compliance testing because they normally feed mercury at levels resulting in emissions well below current limits.[30] Consequently, sources are generally complying with generic, conservative feedrate limits established under RCRA rather than feedrate limits established during compliance testing. Because our data base is comprised essentially of normal emissions, we believe this is one instance where use of normal data to identify MACT floor is appropriate. See discussion in Section V.D. below of how emissions variability is addressed for the mercury floors.

4. What Approach Was Used To Fill In Missing or Unavailable Data?

With respect to today's rule, the term "imputation" refers to a data handling technique where a value is filled-in for a missing or unavailable data point. We only applied this technique to hazardous air pollutants that are comprised of more than one pollutant (*i.e.*, semivolatile metals, low volatile metals, total chlorine). We used imputation techniques in both the proposal and May 1997 NODA; however, we decided not to use imputation procedures in the development of today's promulgated standards. We used only complete data sets in our MACT determinations. Several commenters to the proposal and May 1997 NODA oppose the use of imputation techniques. Commenters express concern that the imputation approach used in the proposal did not preserve the statistical characteristics (average and standard deviation) of the entire data set. Thus, commenters suggest that subsequent MACT analyses were flawed. We reevaluated the data base and determined that a sufficient number of data sets are complete without the use of an imputation technique.[31] A complete discussion of various data handling conventions is presented in the technical support document.[32]

II. How Did We Select the Pollutants Regulated by This Rule?

Section 112(b) of the Clean Air Act, as amended, provides a list of 188[33] hazardous air pollutants for which the Administrator must promulgate emission standards for designated major and area sources. The list is comprised of metal, organic, and inorganic compounds.

Hazardous waste combustors emit many of the hazardous air pollutants. In particular, hazardous waste combustors can emit high levels of dioxins and furans, mercury, lead, chromium, antimony, and hydrogen chloride. In addition, hazardous waste combustors can emit a wide range of nondioxin/furan organic hazardous air pollutants, including benzene, chloroform, and methylene chloride.

In today's rule, we establish nine emission standards to control hazardous air pollutants emitted by hazardous waste combustors. Specifically, we establish emission standards for the following hazardous air pollutants: Chlorinated dioxins and furans, mercury, two semivolatile metals (*i.e.*, lead and cadmium), three low volatility metals (*i.e.*, arsenic, beryllium, chromium), and hydrochloric acid/chlorine gas. In addition, MACT control is provided for other hazardous air pollutants via standards for surrogates: (1) A standard for particulate matter will control five metal hazardous air pollutants—antimony, cobalt, manganese, nickel, and selenium; and (2) standards for carbon monoxide, hydrocarbons, and destruction and removal efficiency will control nondioxin/furan organic hazardous air pollutants.

A. Which Toxic Metals Are Regulated by This Rule?[34]

1. Semivolatile and Low Volatile Metals

The Section 112(b) list of hazardous air pollutants includes 11 metals: antimony, arsenic, beryllium, cadmium, chromium, cobalt, lead, manganese, mercury, nickel, and selenium. To establish an implementable approach for controlling these metal hazardous air pollutants, we proposed to group the metals by their relative volatility and established emission standards for each volatility group. We placed six of the eleven metals in volatility groups. The high-volatile group is comprised of mercury, the semivolatile group is comprised of lead and cadmium, and the low volatile group is comprised of arsenic, beryllium, and chromium.[35] We refer to these six metals for which we have established standards based on volatility group as "enumerated metals." We have chosen to control the remaining five metals using particulate matter as a surrogate as discussed in the next section.

Grouping metals by volatility is reasonable given that emission control strategies are governed primarily by a metal's volatility. For example, while semivolatile metals and low volatile metals are in particulate form in the emission control train and can be removed as particulate matter, mercury species are generally emitted from hazardous waste combustors in the vapor phase and cannot be controlled by controlling particulate matter unless a sorbent, such as activated carbon, is injected into the combustion gas. In addition, low volatile metals are easier to control than semivolatile metals because semivolatile metals volatilize in the combustion chamber and condense on fine particulate matter, which is somewhat more difficult to control. Low volatile metals do not volatilize significantly in hazardous waste combustors and are emitted as larger, easier to remove, particles entrained in the combustion gas.[36]

Commenters agree with our proposal to group metals by their relative volatility. We adopt these groupings for the final rule.

We note that the final rule does not require a source to control its particulate matter below the particulate matter standard to control semivolatile and low

[30] Three of 23 incinerators used to define MACT floor (*i.e.*, sources for which mercury feedrate data are available) are known to have spiked mercury. No cement kilns used to define MACT floor (*e.g.*, excluding sources that have stopped burning hazardous waste) are known to have spiked mercury. Only one of ten lightweight aggregate kilns used to define MACT floor is known to have spiked mercury.

[31] This is especially true because antimony is no longer included in the low volatile metal standard.

[32] See USEPA, "Final Technical Support Document for HWC MACT Standards, Volume III: Selection of MACT Standards and Technologies," July 1999.

[33] The initial list consisted of 189 HAPs, but we have removed caprolactam (CAS number 105602) from the list of hazardous air pollutants. See § 63.60.

[34] RCRA standards currently control emissions of three toxic metals that have not been designated as Clean Air Act hazardous air pollutants: Barium, silver, and thallium. These RCRA metals are incidentally controlled by today's MACT controls for metal hazardous air pollutants in two ways. First, the RCRA metals are semivolatile or nonvolatile and will, in part, be controlled by the air pollution control systems used to meet the semivolatile metal and low volatile metal standards in today's rule. Second, these RCRA metals will be controlled by the measures used to meet today's MACT participate matter standard. See text that follows.

[35] Antimony was included in the low volatile group at proposal, but we subsequently determined that the MACT particulate matter standard serves as an adequate surrogate for this metal. See the May 1997 NODA (62 FR at 24216). In making this determination, we noted that antimony is an noncarcinogen with relatively low toxicity compared with the other five nonmercury metals that were placed in volatility groups. To be of particular concern, antimony would have to be present in hazardous waste at several orders of magnitude higher than shown in the available data.

[36] The dynamics associated with the fate of metals in a hazardous waste combustor are much more complex than presented here. For more information, see USEPA, "Draft Technical Support Document for HWC MACT Standards, Volume VII: Miscellaneous Technical Issues," February 1996.

volatile metals. It is true that when we were determining the semivolatile and low volatile metal floor standards, we did examine the feedrates from only those facilities that were meeting the numerical particulate standard. See Part Four, Section V.B.2.c. This is because we believe that facilities, in practice, use both feedrate and particulate matter air pollution control devices in a complementary manner to address metals emissions (except mercury). However, our setting of the semivolatile and low volatile metal floor standards does not require MACT particulate matter control to be installed, either directly or indirectly, as a matter of CAA compliance. We do not think it is necessary to require compliance with a particulate matter standard as an additional express element of the semivolatile/low volatile metal emission standards because the particulate matter standard is already required to control the nonenumerated metals, as discussed below. However, we could have required compliance with a particulate matter standard as part of the semivolatile or low volatile metal emission standard because of the practice of using particulate matter control as at least part of a facility's strategy to control or minimize metal emissions (other than mercury).

2. How Are the Five Other Metal Hazardous Air Pollutants Regulated?

We did not include five metal hazardous air pollutants (*i.e.*, antimony, cobalt, manganese, nickel, selenium) in the volatility groups because of: (1) Inadequate emissions data for these metals[37]; (2) relatively low toxicity of antimony, cobalt, and manganese; and (3) the ability to achieve control, as explained below, by means of surrogates. Instead, we chose the particulate matter standard as a surrogate control for antimony, cobalt, manganese, nickel, and selenium. We refer to these five metals as "nonenumerated metals" because standards specific to each metal have not been established. We conclude that emissions of these metals is effectively controlled by the same air pollution control devices and systems used to control particulate matter.

Some commenters suggest that particulate matter is not a surrogate for the five nonenumerated metals. Commenters also note that our own study, as well as investigations by commenters, did not show a relationship between particulate matter and semivolatile metals and low volatile metals when emissions from multiple sources were considered. However, we conclude that such a relationship is not expected when multiple sources are considered because wide variations in source operations can affect: (1) Metals and particulate matter loadings at the inlet to the particulate matter control device; (2) metals and particulate matter collection efficiency; and (3) metals and particulate matter emissions. Factors that can contribute to variability in source operations include metal feed rates, ash levels, waste types and physical properties (*i.e.*, liquid vs. solid), combustion temperatures, and particulate matter device design, operation, and maintenance.

Conversely, emissions of semivolatile metals and low volatile metals are directly related to emissions of particulate matter at a given source when other operating conditions are held constant (*i.e.*, as particulate matter emissions increase, emissions of these metals also increase) because semivolatile metals and low volatile metals are present as particulate matter at the typical air pollution control device temperatures of 200 to 400°F that are required under today's rule.[38] A strong relationship between particulate matter and semivolatile/low volatile metal emissions is evident from our emissions data base of trial burn emissions at individual sources where particulate matter varies and metals feedrates and other conditions that may affect metals emissions were held fairly constant. Other work also has clearly demonstrated that improvement in particulate control leads to improved metals control.[39]

We also requested comment on whether particulate matter could be used as a surrogate for all semivolatile and low volatile metal hazardous air pollutants (*i.e.*, all metal hazardous air pollutants except mercury). See the May 1997 NODA. This approach is strongly recommended by the cement industry. In that Notice, we concluded that, because of varying and high levels of metals concentrations in hazardous waste, use of particulate matter control alone may not provide MACT control for metal hazardous air pollutants.[40] Our conclusion is the same today. Without metal-specific MACT emission standards or MACT feedrate standards, sources could feed high levels of one or more metal hazardous air pollutant metals. This practice could result in high metal emissions, even though the source's particulate matter is controlled to the emission standard (*i.e.*, a large fraction of emitted particulate matter could be comprised of metal hazardous air pollutants). Thus, the use of particulate matter control alone would not constitute MACT control of that metal and would be particularly troublesome for the enumerated semivolatile and low volatile metal because of their toxicity.[41]

Many commenters suggest that particulate matter is an adequate surrogate for all metal hazardous air pollutants. They suggest that, given current metal feedrates and emission rates, particularly in the cement industry, a particulate matter standard is sufficient to ensure that metal hazardous air pollutants (other than mercury) are controlled to levels that would not pose a risk to human health or the environment. While this may be true in some cases as a theoretical matter, it may not be in all cases. Data demonstrating this conclusively were not available for all cement kilns. Moreover, this approach may not ensure MACT control of the potentially problematic (*i.e.*, high potential risk) metals for reasons discussed above (*i.e.*, higher metal feedrates will result in higher metals emissions even though particulate matter capture efficiency remains constant). Consequently, we conclude that semi-volatile metals and low volatile metals standards are appropriate in addition to the particulate matter standard.

Finally, several commenters suggest that a particulate matter standard is not needed to control the five nonenumerated metals because the standards for the enumerated semivolatile and low volatile metals would serve as surrogates for those

[37] USEPA, "Final Technical Support Document for HWC MACT Standards, Volume II: HWC Emissions Database," July 1999.

[38] The dioxin/furan emission standard requires that gas temperatures at the inlet to electrostatic precipitators and fabric filters not exceed 400°F. Wet particulate matter control devices reduce gas temperatures to below 400°F by virtue of their design and operation. The vapor phase contribution (*i.e.*, nonparticulate form that will not be controlled by a particulate matter control device) of semivolatile metal and low volatile metal at these temperatures is negligible.

[39] USEPA, "Final Technical Support Document for HWC MACT Standards, Volume III: Selection of MACT Standards and Technologies," July 1999.

[40] However, for sources not burning hazardous waste and without a significant potential for extreme variability in metals feedrates, particulate matter is an adequate surrogate for metal hazardous air pollutants (*e.g.*, for nonhazardous waste burning cement kilns).

[41] Using particulate matter as a surrogate for metals is, however, the approach we used in the final rule for five metals: Antimony, cobalt, manganese, nickel, selenium. Technical and practical reasons unique to these metals support this approach. First, these metals exhibit relatively low toxicity. Second, for some of these metals, we did not have emissions data adequate to establish specific standards. Therefore, the best strategy for these particular metals, at this time, is to rely on particulate matter as a surrogate.

metals. Their rationale is that because the nonenumerated metals can be classified as either semivolatile or nonvolatile[42], they would be controlled along with the enumerated semivolatile and low volatile metals. However, MACT control would not be assured for the five nonenumerated metals even though they would be controlled by the same emission control device as the enumerated semivolatile and low volatile metals. For example, a source with high particulate matter emissions could achieve the semivolatile and low volatile metal emission standards (*i.e.*, MACT control) by feeding low levels of enumerated semivolatile and low volatile metals. But, if that source also fed high levels of nonenumerated metals, MACT control for those metals would not be achieved unless the source was subject to a particulate matter MACT standard. Consequently, we do not agree that the semivolatile and low volatile metal standards alone can serve as surrogates for the nonenumerated metals.

We also proposed to use particulate matter as a supplemental control for nondioxin/furan organic hazardous air pollutants that are adsorbed onto the particulate matter. Commenters state, however, that the Agency had not presented data showing that particulate matter in fact contains significant levels of adsorbed nondioxin/furan organic hazardous air pollutants. We now concur with commenters that, for cement kiln and lightweight aggregate kiln particulate matter, particulate matter emissions have not been shown to contain significant levels of adsorbed organic compounds. This is likely because cement kiln and lightweight aggregate kiln particulate matter is primarily inert process dust (*i.e.*, entrained raw material). Although particulate matter emissions from incinerators could contain higher levels of carbon that may adsorb some organic compounds, this is not likely a significant means of control for those organic hazardous air pollutants.[43]

B. How Are Toxic Organic Compounds Regulated by This Rule?

1. Dioxins/Furans

We proposed that dioxin/furan emissions be controlled directly with a dioxin/furan emission standard based on toxicity equivalents. The final rule adopts a TEQ approach for dioxin/furans. In terms of a source determining compliance, we expect sources to use accepted TEQ references.[44]

2. Carbon Monoxide and Hydrocarbons

We proposed that emissions of nondioxin/furan organic hazardous air pollutants be controlled by compliance with continuously monitored emission standards for either of two surrogates: carbon monoxide or hydrocarbons. Carbon monoxide and hydrocarbons are widely accepted indicators of combustion conditions. The current RCRA regulations for hazardous waste combustors use emissions limits on carbon monoxide and hydrocarbons to control emissions of nondioxin/furan toxic organic emissions. See 56 FR 7150 (February 21, 1991) documenting the relationship between carbon monoxide, combustion efficiency, and emissions of organic compounds. In addition, Clean Air Act emission standards for municipal waste combustors and medical waste incinerators limit emissions of carbon monoxide to control nondioxin/furan organic hazardous air pollutants. Finally, hydrocarbon emissions are an indicator of organic hazardous air pollutants because hydrocarbons are a direct measure of organic compounds.

Nonetheless, many commenters state that EPA's own surrogate evaluation[45] did not demonstrate a relationship between carbon monoxide or hydrocarbons and nondioxin/furan organic hazardous air pollutants at the carbon monoxide and hydrocarbon levels evaluated. Several commenters note that this should not have been a surprise given that the carbon monoxide and hydrocarbon emissions data evaluated were generally from hazardous waste combustors operating under good combustion conditions (and thus, relatively low carbon monoxide and hydrocarbon levels). Under these conditions, emissions of nondioxin/furan organic hazardous air pollutants were generally low, which made the demonstration of a relationship more difficult. These commenters note that there may be a correlation between carbon monoxide and hydrocarbons and nondioxin/furan organic hazardous air pollutants, but it would be evident primarily when actual carbon monoxide and hydrocarbon levels are higher than the regulatory levels. We agree, and conclude that carbon monoxide and hydrocarbon levels higher than those we establish as emission standards are indicative of poor combustion conditions and the potential for increased emissions of nondioxin/furan organic hazardous air pollutants. Consequently, we have adopted our proposed approach for today's final rule.[46]

3. Destruction and Removal Efficiency

We have determined that a destruction and removal efficiency (DRE) standard is needed to ensure MACT control of nondioxin/furan organic hazardous air pollutants.[47] We adopt the implementation procedures from the current RCRA requirements for DRE (see §§ 264.342, 264.343, and 266.104) in today's final rule. The rationale for adopting destruction and removal efficiency as a MACT standard is discussed later in Section IV of the preamble.

C. How Are Hydrochloric Acid and Chlorine Gas Regulated by This Rule?

We proposed that hydrochloric acid and chlorine gas emissions be controlled by a combined total chlorine MACT standard because: (1) The test method used to determine hydrochloric acid and chlorine gas emissions may not be able to distinguish between the compounds in all situations;[48] and (2) both of these hazardous air pollutants can be controlled by limiting feedrate of chlorine in hazardous waste and wet scrubbing. We have adopted this approach in today's final rule.

One commenter questions whether it is appropriate to establish a combined standard for hydrochloric acid and chlorine gas because the removal efficiency of emission control equipment is substantially different for the two pollutants. Although we agree that the efficiency of emission control equipment is substantially different for the two pollutants, we conclude that the MACT control techniques will readily

[42] As a factual matter, selenium can be classified as a semivolatile metal and the remaining four nonenumerated metals can be classified as low volatile metals.

[43] We recognize that sorbent (*e.g.*, activated carbon) may be injected into the combustion system to control mercury or dioxin/furan. In these cases, particulate matter would be controlled as a site-specific compliance parameter for these organics. See the discussion in Part Five of this preamble.

[44] For example, USEPA, "Interim Procedure for Estimating Risks Associated With Exposures to Mixtures of Chlorinated Dibenzo-p-Dioxin and -Dibenzofurans (CDDs and CDFs) and 1989 Update", March 1989; Van den Berg, M., *et al.* "Toxic Equivalency Factors (TEFs) for PCBs, PCDDs, PCDFs for Humans and Wildlife" *Environmental Health Perspectives*, Volume 106, Number 12, December 1998.

[45] See Energy and Environmental Research Corporation, "Surrogate Evaluation of Thermal Treatment Systems," Draft Report, October 17, 1994.

[46] As discussed at proposal, however, this relationship does not hold for certain types of cement kilns where carbon monoxide and hydrocarbons emissions evolve from raw materials. See discussion in Section VII of Part Four.

[47] Under this standard, several difficult to combust organic compounds would be identified and destroyed or removed by the combustor to at least a 99.99% (or 99.9999%, as applicable) efficiency.

[48] See the proposed rule, 61 FR at 17376.

enable sources to achieve the hydrochloric acid/chlorine gas emission standard. As discussed in Sections VI, VII, and VIII below, MACT control for all hazardous waste combustors is control of the hazardous waste chlorine feedrate. This control technique is equally effective for hydrochloric acid and chlorine gas and represents MACT control for cement kilns. MACT control for incinerators also includes wet scrubbing. Although wet scrubbing is more efficient for controlling hydrochloric acid, it also provides some control of chlorine gas. MACT control for lightweight aggregate kilns also includes wet or dry scrubbing. Although dry scrubbing does not control chlorine gas, chlorine feedrate control combined with dry scrubbing to remove hydrochloric acid will enable lightweight aggregate kilns to achieve the emission standard for hydrochloric acid/chlorine gas.

III. How Are the Standards Formatted in This Rule?

A. What Are the Units of the Standards?

With one exception, the final rule expresses the emission standards on a concentration basis as proposed, with all standards expressed as mass per dry standard cubic meter (*e.g.*, µg/dscm), with hydrochloric acid/chlorine gas, carbon monoxide, and hydrocarbon standards being expressed at parts per million by volume (ppmv). The exception is the particulate matter standard for hazardous waste burning cement kilns where the standard is expressed as kilograms of particulate matter per Mg of dry feed to the kiln.

Several commenters suggest that the standards should be expressed on a mass emission basis (*e.g.*, mg/hour) because of equity concerns across source categories and environmental loading concerns. They are concerned that expressing the standards on a concentration basis allows large gas flow rate sources such as cement kilns to emit a much greater mass of hazardous air pollutants per unit time than smaller sources such as some on-site incinerators. Concomitantly, small sources would incur a higher cost/lb of pollutant removed, they contend, than a large source.[49] Further, they reason that the larger sources would pose a much greater risk to human health and the environment because risk is a function of mass emissions of pollutants per unit of time.

Although we agree with commenters' point about differential environmental loadings attributable to small versus large sources with a concentration-based standard, we note that the mass-based standard urged here is inherently incompatible with technology-based MACT standards for several reasons.[50] A mass-based standard does not ensure MACT control at small sources. Small sources have lower flow rates and thus would be allowed to emit hazardous air pollutants at high concentrations. They could meet the standard with no or minimal control. In addition, this inequity between small and large sources would create an incentive to divert hazardous waste from large sources to small sources (existing and new), causing an increase in emissions nationally.

B. Why Are the Standards Corrected for Oxygen and Temperature?

As proposed, the final standards are corrected to 7 percent oxygen and 20°C because the data we use to establish the standards are corrected in this manner and because the current RCRA regulations for these sources require this correction. These corrections normalize the emissions data to a common base, recognizing the variation among the different combustors and modes of operation.

Several commenters note that the proposed oxygen correction equation does not appropriately address hazardous waste combustors that use oxygen enrichment systems. They recommend that the Agency promulgate the oxygen correction factor equation proposed in 1990 for RCRA hazardous waste incinerators. See 55 FR at 17918 (April 27, 1990). We concur, and adopt the revised oxygen correction factor equation.

C. How Does the Rule Treat Significant Figures and Rounding?

As proposed, the final rule establishes standards and limits based on two significant figures. One commenter notes that a minimum of three significant figures must be used for all intermediate calculations when rounding the results to two significant figures. We concur. Sources should use standard procedures, such as ASTM procedure E–29–90, to round final emission levels to two significant figures.

IV. How Are Nondioxin/Furan Organic Hazardous Air Pollutants Controlled?

Nondioxin/furan organic hazardous air pollutants are controlled by a destruction and removal efficiency (DRE) standard and the carbon monoxide and hydrocarbon standards. Previous DRE tests demonstrating compliance with the 99.99% requirement under current RCRA regulations may be used to document compliance with the DRE standard provided that operations have not been changed in a way that could reasonably be expected to affect ability to meet the standard. However, if waste is fed at a point other than the flame zone, then compliance with the 99.99% DRE standard must be demonstrated during each comprehensive performance test, and new operating parameter limits must be established to ensure that DRE is maintained. A 99.9999% DRE is required for those hazardous waste combustors burning dioxin-listed wastes. These requirements are discussed in Section IV.A. below.

In addition, the rule establishes carbon monoxide and hydrocarbons emission standards as surrogates to ensure good combustion and control of nondioxin/furan organic hazardous air pollutants. Continuous monitoring and compliance with either the carbon monoxide or hydrocarbon emissions standard is required. If you choose to continuously monitor and comply with the carbon monoxide standard, you must also demonstrate during the comprehensive performance test compliance with the hydrocarbon emission standard. Additionally, you must also set operating limits on key parameters that affect combustion conditions to ensure continued compliance with the hydrocarbon emission standard. Alternatively, continuous monitoring and compliance with the hydrocarbon emissions standard eliminates the need to monitor carbon monoxide emissions because hydrocarbon emissions are a more direct surrogate of nondioxin/furan organic hazardous air pollutant emissions. These requirements are discussed in Section IV.B below.

A. What Is the Rationale for DRE as a MACT Standard?

All sources must demonstrate the ability to destroy or remove 99.99

[49] This result is not evident given that the cost of an emission control device is generally directly proportional to the gas flow rate, not the mass emission rate of pollutants per unit time.

[50] Although the particulate matter standard for hazardous waste burning cement kilns in today's rule is the New Source Performance Standard expressed as on a mass basis (*i.e.*, kg of particulate matter per megagram of dry feed to the kiln), this standard is not based on a "mass of particulate matter emissions per unit of time" that commenters suggest. Rather, the cement kiln standard can be equated to a concentration basis given that cement kilns emit a given quantity of combustion gas per unit of dry feed to the kiln. In fact, we proposed the cement kiln particulate matter standard on a concentration basis, 0.03 gr/dscf, that was calculated from the New Source Performance Standard when applied to a typical wet process cement kiln.

percent of selected principal organic hazardous compounds in the waste feed as a MACT standard. This requirement, commonly referred to as four-nines DRE, is a current RCRA requirement. We are promulgating the DRE requirement as a MACT floor standard to control the emissions of nondioxin organic hazardous air pollutants. The rule also requires sources to establish limits on specified operating parameters to ensure compliance with the DRE standard. See Part Five Section VII(B).

In the April 1996 NPRM, we proposed that the four-nines DRE test requirement be retained under RCRA and be performed as part of a RCRA approved trial burn because we did not believe that the DRE test could be adequately implemented using the generally self-implementing MACT performance test and notification process.[51] See 61 FR 17447.

In response to the April proposal, however, we received comments that suggest the MACT comprehensive performance test and RCRA DRE trial burn could and should be combined, and that we should combine all stack air emission requirements for hazardous waste combustors into a single permit. Commenters are concerned that our proposed approach required sources to obtain two permits for air emissions and potentially be unnecessarily subject to dual enforcement.

We investigated approaches that would achieve the goals of a single air emission permit and inclusion of DRE in MACT. We determined that the 40 CFR part 63 general provisions, applicable to all MACT regulated sources unless superseded, includes a process similar to the process to develop a RCRA trial burn test plan and allows permitting authorities to review and approve MACT performance test plans. See 40 CFR 63.7. Additionally, we determined that, because all hazardous waste combustors are currently required to achieve four-nines DRE, the DRE requirement could be included as a MACT floor standard rather than a RCRA requirement. In the May 1997 NODA, we discussed an alternative approach that used a modified form of the general provision's performance test plan and approval process. The approach would allow combination of the DRE test with the comprehensive performance test and, therefore, facilitate implementation of DRE as a MACT standard. We also discussed modifying the general approach to extend the performance test plan review period to one year in advance of the date a source plans to perform the comprehensive performance test. This extended review period would provide sufficient time for negotiations between permitting authorities and sources to develop and approve comprehensive performance test plans. These test plans would identify operating parameter limits necessary to ensure compliance with all the proposed MACT standards, as well as, implement the four-nines DRE test as a MACT floor standard. See 62 FR at 24241. Commenters support the process to combine the applicable stack emission requirements into a single permit. As for making the DRE test a MACT standard, we received no negative comments. Many commenters, however, question the need for subsequent DRE testing once a unit demonstrates four-nines DRE. See discussion and our response in Subsection 2 below.

We believe that requiring the DRE test as a MACT standard is appropriate. As we previously noted, the four-nines DRE is firmly grounded statutory and regulatory requirement that has proven to be an effective method to determine appropriate process controls necessary for the combustion of hazardous waste. Specifically, RCRA requires that all hazardous waste incinerators must demonstrate the minimum technology requirement of four-nines DRE (RCRA section 3004(o)(1)(B)). Additionally, the current RCRA BIF regulations require that all boiler and industrial furnaces meet the four-nines DRE standard. Moreover, current RCRA regulations require all sources incinerating certain dioxin-listed contaminated wastes (F020–023 and F026–27) to achieve 99.9999% (six-nines) DRE. See §§ 264.343(a)(2) and 266.104(a)(3).

The statutory requirement for incinerators to meet four-nines DRE can be satisfied if the associated MACT requirements ensure that incinerators will continue to meet the four-nines DRE minimum technology requirement, *i.e.*, that MACT standards provide at least the "minimum" RCRA section 3004(o)(1) level of control. To determine if the RCRA statutory requirements could be satisfied, we investigated whether DRE could be replaced with universal standards for key operating parameters based on previous DRE demonstrations (*i.e.*, standards for carbon monoxide and hydrocarbon emissions). We found that, in the vast majority of DRE test conditions, if a unit operated with carbon monoxide levels of less than 100 ppmv and hydrocarbon emissions of less than 10 ppmv, the unit met or surpassed four-nines DRE. In a small number of test conditions, units emitted carbon monoxide and hydrocarbons at levels less than 100 and 10 ppmv respectively, but failed to meet four-nines DRE. Most failed test conditions were either due to questionable test results or faulty test design.[52] See U.S. EPA, "Draft Technical Support Document for HWC MACT Standards (NODA), Volume II: Evaluation of CO/HC and DRE Database," April 1997. Even though we could potentially explain the reasons these units failed to achieve four-nines DRE, we determined that universal carbon monoxide and hydrocarbon emissions limits may not ensure that all units achieve four-nines DRE because carbon monoxide and hydrocarbon emissions may not be representative of good combustion for all operating conditions that facilities may desire to operate. In addition, we could not identify a better method than the DRE test to limit combustion failures modes.

Commenters state that the test conditions under which the DRE failures occurred involved feeding practices that were not common in the hazardous waste combustion industry. They further state that, if it could be ensured that hazardous waste ignited, hydrocarbon and carbon monoxide limits would be sufficient to ensure four-nines DRE is achieved continuously. Therefore, a DRE demonstration would not be warranted. Although we might agree in theory, the fact that tests were performed under these test conditions indicates that a source desired to operate in that fashion. Only the DRE test identified that the combustion failure occurred and was not susceptible to control via carbon monoxide and hydrocarbon emissions. This and other similar failures can lead to increased emissions of products of incomplete combustion and organic hazardous air pollutants. Also, as commenters acknowledge, carbon monoxide and hydrocarbon emissions were effective surrogates to ensure four-nines DRE only when

[51] Historically, under RCRA regulations, the permitting authority and hazardous waste combustion source found it necessary to go through lengthy negotiations to develop a RCRA trial burn plan that adequately demonstrates the unit's ability to achieve four-nines DRE.

[52] In many of the failed test conditions that we investigated, the facility fed a low concentration of organic compound on which the DRE was being calculated. As has been observed many times, organic compounds can be reformed in the post combustion gas stream at concentrations sufficient to fail DRE. This is not indicative of a failure in the systems ability to destroy the compound, but is more likely the result of a poorly designed test. If the facility had fed a higher concentration of organic compound in the waste to the combustor, the unit would have been more likely to meet four-nines DRE with no change in the operating conditions used during the test. In other cases, poor test design (*i.e.*, firing aqueous organic waste into an unfired secondary combustion chamber) is considered to be the cause.

hazardous waste ignited. However, as we identified in the May 1997 NODA, there are a number of hazardous waste combustion sources that operate in a manner that does not ensure ignition of hazardous waste.

As a result of the DRE test investigation, we determined that a successful DRE demonstration is an effective, appropriate, and necessary method to identify operating parameter limits that ensure proper and achievable combustion of hazardous waste and to limit the emissions of organic hazardous air pollutants. Additionally, the DRE standard is a direct measure to ensure that the RCRA section 3004(o)(1) mandate and its protectiveness goals are being met, and also serves to maintain a consistent test protocol for sources combusting hazardous waste. The DRE demonstration requirement is also reasonable, provides a sound means to allow deferral of a RCRA mandate to the CAA, and simplifies implementation by having all stack emissions-related testing and compliance requirements promulgated under one statute, the CAA. Therefore, we retain the DRE demonstration as part of the MACT comprehensive performance test unless a DRE test has already been performed with no relevant changes.

1. MACT DRE Standard

In today's rule, all affected sources are required to meet 99.99% DRE of selected Principal Organic Hazardous Constituents (POCs) that are as or more difficult to destroy than any organic hazardous pollutant fed to the unit. With one exception discussed in subsection 3 below, this demonstration need be made only once during the operational life of a source, either before or during the initial comprehensive performance test, provided that the design, operation, and maintenance features do not change in a manner that could reasonably be expected to affect the ability to meet the DRE standard.

The DRE demonstration involves feeding a known mass of POHC(s) to a combustion unit, and then measuring for that POHC(s) in stack emissions. If the POHC(s) is emitted at a level that exceeds 0.01% of the mass of the individual POHC(s) fed to the unit, the unit fails to demonstrate sufficient DRE.

Operating limits for key combustion parameters are used to ensure four-nines DRE is maintained. The operating parameter limits are established based on operations during the DRE test. Examples of combustion parameters that are used to set operating limits include minimum combustion chamber temperature, minimum gas residence time, and maximum hazardous waste feedrate by mass. See § 63.1209(j).

Today's MACT DRE requirement is essentially the same as that currently required under RCRA. The main difference is that the vast majority of the MACT DRE demonstrations would not have to be repeated as often as currently required under RCRA, as discussed in section 3 below.

2. How Can Previous Successful Demonstrations of DRE Be Used To Demonstrate Compliance?

Except as discussed below, today's rule requires that, at least once during the operational life of a source during or before the initial comprehensive performance test, the source must demonstrate the ability to achieve 99.99% DRE and must set operating parameter limits to ensure that DRE is maintained. However, we recognize that many sources have already undergone approved DRE testing. Further, many facilities do not intend to modify their units design or operations in such a way that DRE performance or parameters would be adversely affected. Therefore, the Agency is allowing sources to use results from previous EPA or State-approved DRE demonstrations to fulfill the MACT four-nines DRE requirement, as well as to set the necessary operating limits on parameters that ensure continued compliance.

If a facility wishes to operate under new operating parameter limits that could reasonably be expected to affect the ability to meet the standard, a new DRE demonstration must be performed before or concurrent with the comprehensive performance test. If the DRE operating limits conflict with operating parameter limits that are set to ensure compliance with other MACT standards, the unit must comply with the more stringent limits. Additionally, if a source is modified in such a way that its DRE operating limits are no longer applicable or valid, the source must perform a new DRE test. Moreover, if a source is modified in any way such that DRE performance or parameters are affected adversely, the source must perform a new DRE test.

3. DRE for Sources That Feed Waste at Locations Other Than the Flame Zone

Today's rule requires sources that feed hazardous waste in locations other than the flame zone to perform periodic DRE tests to ensure that four-nines DRE continues to be achieved over the life of the unit. As indicated in the May 1997 NODA at 62 FR 25877, the Agency is concerned that these types of sources have a greater potential of varying DRE performance due to their waste firing practices. That is, due to the unique design and operation of the waste firing system, the DRE may vary over time, and those variations cannot be identified or limited through operating limits set during a single DRE test. For these units, we are requiring that DRE be verified during each comprehensive performance test and that new operating parameter limits be established to ensure continued compliance.

4. Sources That Feed Dioxin Wastes

In today's rule, we are requiring all sources that feed certain dioxin-listed wastes (*i.e.*, F020–F023, F026, F027) to demonstrate the ability to achieve 99.9999 percent (six-nines) DRE as a MACT standard. This requirement will serve to achieve a number of goals associated with today's regulations. First, under RCRA, six-nines DRE is required when burning certain dioxin-listed wastes. If we did not promulgate this requirement as a MACT standard, sources that feed dioxin-listed waste would be required to maintain two permits to manage their air emissions. Thus, by including this requirement as a MACT standard, we eliminate any unnecessary duplication. That outcome is contrary to our goal which is to limit, to the greatest extent possible, the need for sources to obtain two permits governing air emissions under different statutory authorities. Second, six-nines DRE helps to improve control of nondioxin organic hazardous air pollutants as well. Finally, this requirement properly reflects floor control for sources that feed dioxin-listed wastes. Currently, all sources that feed dioxin listed wastes must achieve six-nines DRE. Before making the decision to include six-nines DRE as a MACT standard, we considered whether the requirements could be eliminated given that we are issuing dioxin/furan emission standards with today's rule. We concluded, first, that we had not provided sufficient notice and comment to depart from the current regulations applicable to these sources. Second, we also decided that because we currently require other similar highly toxic bioaccumulative and persistent compounds (*e.g.*, PCB wastes) to be fed to units that demonstrate six-nines DRE, a departure from that policy for RCRA dioxin wastes would be inconsistent. Finally, we are in discussions that may cause us to reevaluate our overall approach to dioxin-listed wastes, with the potential to impact this rule and the land disposal restrictions program. Any changes to our approach will be included in a single rulemaking that would be proposed later.

B. What Is the Rationale for Carbon Monoxide or Hydrocarbon Standards as Surrogate Control of Organic Hazardous Air Pollutants?

Today's rule adopts limits on emissions of carbon monoxide and hydrocarbons as surrogates to ensure good combustion and control of nondioxin organic hazardous air pollutants. We require continuous emissions monitoring and compliance with either the carbon monoxide or hydrocarbon emissions standard. Sources can choose which of these two standards it wishes to continuously monitor for compliance. If a source chooses the carbon monoxide standard, it must also demonstrate during the comprehensive performance test compliance with the hydrocarbon emission standard. During this test the source also must set operating limits on key parameters that affect combustion conditions to ensure continued compliance with the hydrocarbon emission standard. These parameters relate to good combustion practices and are identical to those for which you must establish limits under the DRE standard. See § 63.109(a)(7) and 63.1209(j). However, this source need not install and use a continuous hydrocarbon monitor to ensure continued compliance with the hydrocarbon standard. As discussed previously, the limits established for DRE are identical. If a source elects to use the hydrocarbon limit for compliance, then it must continuously monitor and comply with the hydrocarbon emissions standard. However, this type of source need not monitor carbon monoxide emissions or carbon monoxide operating parameters because hydrocarbon emissions are a more direct surrogate of nondioxin organic hazardous air pollutant emissions.

The April 1996 NPRM proposed MACT emission standards for both carbon monoxide and hydrocarbon as surrogates to control emissions of nondioxin organic hazardous air pollutants. We also proposed that cement kilns comply with either a carbon monoxide or hydrocarbons standard due to raw material considerations.[53] See 61 FR at 17375–6. Our reliance on only carbon monoxide or only hydrocarbon has drawbacks, and therefore we proposed that incinerators and lightweight aggregate kilns comply with emissions standards for both. Nonetheless, we also acknowledged that requiring compliance with both carbon monoxide and hydrocarbon standards may be redundant, and requested comment on: (1) Giving sources the option of complying with either carbon monoxide or hydrocarbon emission standards; or (2) establishing a MACT standard for either carbon monoxide or hydrocarbon, but not both.

Comments to our proposed approach question the necessity of two related surrogates to control organic hazardous air pollutants. Many commenters assert they are capable of controlling hydrocarbon emissions effectively, but due to their system's unique design, they could not comply continuously with the carbon monoxide emission standard. In general, commenters prefer an approach that would afford them maximum flexibility in demonstrating compliance with organic control standards, *i.e.*, more like option (1) in the NPRM.

The May 1997 NODA included a refined version of the option that commenters prefer that allowed sources to monitor and comply with either a carbon monoxide or hydrocarbon emission standard. In response to the May 1997 NODA, commenters nearly unanimously support the option that allowed facilities to monitor and comply with either the carbon monoxide or hydrocarbon standard as surrogates to limit emissions of nondioxin organic hazardous air pollutants. However, a few commenters suggest that compliance with carbon monoxide or hydrocarbons in combination with DRE testing is redundant and unnecessary. However, in their comments, they do not address the issue of DRE failures associated with low carbon monoxide or hydrocarbon emissions, other than to state that if ignition failure was avoided, emissions of carbon monoxide or hydrocarbons would be good indicators of combustion efficiency and four-nines DRE. This does not address our concerns, which reflect cases in which ignition failures did not occur and in which destruction and removal efficiencies were not met.

In the May 1997 NODA, we discussed another option that required sources to comply with the hydrocarbon emission standard and establish a site-specific carbon monoxide limit higher than 100 ppmv. This option was developed because compliance with the hydrocarbon standard assures control of nondioxin organic hazardous air pollutants, and a site-specific carbon monoxide limit aids compliance by providing advanced information regarding combustion efficiency. However, we conclude that this option may be best applied as a site-specific remedy in situations where a source has trouble maintaining compliance with the hydrocarbon standard.

Today's final rule modifies the May 1997 NODA approach slightly. Complying with the carbon monoxide standard now requires documentation that hydrocarbon emissions during the performance test are lower than the standard, and requires operating limits on parameters that affect hydrocarbon emissions. We adopt this modification because some data show that high hydrocarbon emissions are possible while simultaneously low carbon monoxide emissions are found.[54]

In the BIF rule (56 FR at 7149–50), we found that both monitoring and compliance with either carbon monoxide or hydrocarbon limits and achieving four-nines DRE is needed to ensure control of products of incomplete combustion (including nondioxin organic hazardous air pollutants) that are a result of hazardous waste combustion. DRE, although sensitive to identifying combustion failure modes, cannot independently ensure that emissions of products of incomplete combustion or organic hazardous air pollutants are being controlled. DRE can only provide the assurance that, if a hazardous waste combustor is operating normally, the source has the capability to transform hazardous and toxic organic compounds into different compounds through oxidation. These other compounds can include carbon dioxide, water, and other organic hazardous air pollutants. Because carbon monoxide provides immediate information regarding combustion efficiency potentially leading to emissions of organic hazardous air pollutants and hydrocarbon provides a direct measure of organic emissions, these two parameters individually or in combination provide additional control that would not be realized with the DRE operating parameter limits alone.[55] Neither our data nor data supplied by commenters show that only monitoring

[53] See discussion regarding cement kilns compliance with the carbon monoxide and/or hydrocarbon standards in Part Four, Section VII.D.

[54] In a number of instances, RCRA compliance test records showed that sources emitting carbon monoxide at less than 100 ppmv emitted hydrocarbons in excess of 10 ppmv.

[55] We acknowledge that although hydrocarbon emissions are a direct measure of organic emissions, they are measured with a continuous emissions monitoring system known as a flame ionization detector. Some data suggest hydrocarbon flame ionization detectors do not respond with the same sensitivity to the full spectrum of organic compounds that may be present in the combustion gas. Additionally, combustion gas conditions also may affect the sensitivity and accuracy of the monitor. Nonetheless, monitoring hydrocarbons with these detectors appears to be the best method reasonably available to provide real-time monitoring of organic emissions from a hazardous waste combustor.

carbon monoxide, hydrocarbons, or DRE by itself can adequately ensure control of nondioxin organics. Therefore, the approach used in the BIF rule still provides the best regulatory model. We conclude in today's rule that hydrocarbons and carbon monoxide monitoring are not redundant with the DRE testing requirement to control emissions of organic hazardous air pollutants and require both standards. For an additional discussion regarding the use of hydrocarbons and carbon monoxide to control emissions of organic hazardous air pollutants, see USEPA, "Technical Support Document for HWC MACT Standards, Volume III: Selection of MACT Standards and Technologies," July 1999.

V. What Methodology Is Used To Identify MACT Floors?

This section discusses: (1) Methods used to identify MACT floor controls and emission levels for the final rule; (2) the rationale for using hazardous waste feedrate control as part of MACT floor control for the metals and total chlorine standards; (3) alternative methods for establishing floor levels considered at proposal and in the May 1997 NODA; and (4) our consideration of emissions variability in identifying MACT floor levels.

A. What Is the CAA Statutory Requirement To Identify MACT Floors?

We identify hazardous waste incinerators, hazardous waste burning cement kilns, and hazardous waste burning lightweight aggregate kilns as source categories to be regulated under section 112. We must, therefore, develop MACT standards for each category to control emissions of hazardous air pollutants. Under CAA section 112, we may distinguish among classes, types and sizes of sources within a category in establishing such standards.

Section 112 prescribes a minimum baseline or "floor" for standards. For new sources, the standards for a source category cannot be less stringent than the emission control that is achieved in practice by the best-controlled similar source. Section 112(d)(3). The standards for existing sources may be less stringent than standards for new sources, but cannot be less stringent than "(A) * * * the average emissions limitation achieved by the best performing 12 percent of the existing sources (for which the Administrator has emissions information) * * *, in the category or subcategory for categories and subcategories with 30 or more sources, or (B) the average emissions limitation achieved by the best performing 5 sources (for which the Administrator has or could reasonably obtain emissions information) in the category or subcategory for categories and subcategories with fewer than 30 sources." *Id.*

We also must consider a more stringent standard than the floor, referred to in today's rule as a "beyond-the-floor" standard. For each beyond-the-floor analysis, we evaluate the maximum degree in reduction of hazardous air pollutants determined to be achievable, taking into account the cost of achieving those reductions, nonair quality health and environmental impacts, and energy costs. Section 112(d)(2). The object of a beyond-the-floor standard is to achieve the maximum degree of emission reduction without unreasonable economic, energy, or secondary environmental impacts.

B. What Is the Final Rule Floor Methodology?

Today's rule establishes MACT standards for the following hazardous air pollutants, hazardous air pollutant groups or hazardous air pollutant surrogates: dioxin/furans, mercury, two semivolatile metals (lead and cadmium), three low volatile metals (arsenic, beryllium, and chromium), particulate matter, total chlorine (hydrochloric acid and chlorine gas), carbon monoxide, hydrocarbons, and destruction and removal efficiency. This subsection discusses the overall engineering evaluation and data analysis methods we used to establish MACT floors for these standards. Additional detail on the specific application of these methods for each source category and standard is presented in Part Four, Sections VI–VIII, of the preamble and in the technical support document.[56]

1. What Is the General Approach Used in This Final Rule?

The starting point in developing standards is to determine a MACT floor emission level, the most lenient level at which a standard can be set. To identify the floor level, we first identified the control techniques used by the best performing sources. We designate these best performing sources the "MACT pool" and the emission control technologies they use we call "MACT floor controls."

After identifying the MACT pool and MACT floor controls, we determine the emission level that the MACT floor controls are routinely achieving—that is, an achievable emission level taking into account normal operating variability (*i.e.*, variability inherent in a properly designed and operated control system). This is called the floor emission level. To ensure that the floor emission level is being achieved by all sources using floor controls (*i.e.*, not just the MACT pool sources), we generally consider emissions data from all sources in a source category that use well-designed and properly operated MACT floor controls. (We call the data set of all sources using floor controls the "expanded MACT pool.") Floor levels in this rule are generally established as the level achieved by the source in the expanded MACT pool with the highest emissions average[57] using well-designed and properly operated MACT floor controls.

Several commenters oppose considering emissions data from all sources using MACT floor controls (*i.e.*, the expanded MACT pool) because they assert the expansion of the MACT pool results in inflated floors. If we adopt these commenters' recommendation, then many sources using MACT controls would not meet the standard, even though they were using MACT floor control. (Indeed, in some cases, other test conditions from the very system used to establish the MACT pool would not meet the standard, notwithstanding no significant change in the system's design and operation.) This result is inappropriate in that all sources using properly designed and operated MACT floor controls should achieve the floor emission level if the technology is well designed and operated. In the absence of data indicating a design or operation problem, we assume the floor emission level based on an expanded MACT pool reflects an emission level consistently achievable by MACT floor technology. Our resulting limits account for the fact that sources and emissions controls will experience normal operating variability even when properly designed and operated.

The MACT floor methodology in this rule does not use a single uniform data analysis approach consistently across all three source categories and standards. Our data analysis methods vary due to: (1) Limitations of our emissions data and ancillary information; (2) emissions of some hazardous air pollutants being related to the feedrate of the hazardous air pollutant (*e.g.*, semivolatile metal emissions are affected by semivolatile metal feedrates) while emissions of

[56] USEPA, "Final Technical Support Document for HWC MACT Standards, Volume III: Selection of MACT Standards and Technologies," July 1999.

[57] Each source's emissions usually are expressed as an average of three or more emission measurements at the same set of operating parameters. This is because compliance is based on the average of three or more runs.

other hazardous air pollutants are not (*e.g.*, dioxin/furan emissions are related to postcombustion dioxin/furan formation rather than dioxin/furan feedrates); (3) the various types of emissions controls currently in use which do not lend themselves to one type of MACT analysis; and (4) consideration of existing regulations as themselves establishing floor levels.

Finally, as discussed in Section D, the MACT floor levels established through our data analysis approaches account for emissions variability without the separate addition of a statistically-derived emissions variability factor.

2. What MACT Floor Approach Is Used for Each Standard?

a. Dioxins and Furans. For dioxins and furans, we adopt the MACT floor methodology discussed in the May 1997 NODA. Based on engineering information and principles, we identify temperature of combustion gas at the particulate matter control device of 400°F or less as MACT floor control of dioxin/furan. This technology and level of control has been selected because postcombustion formation of dioxin/furan is suppressed by lowering postcombustion gas temperatures, and formation is reasonably minimized at gas temperatures of 400°F or below. Sources controlling gas temperatures to 400°F or less at the particulate matter control device represent the level achieved by the median of the best performing 12 percent of sources where the source category has more than 30 sources (or the median of the best performing five sources where the source category has fewer than 30 sources).

The next step is to identify an emissions level that MACT floor control achieved on a routine basis. We analyzed the emissions data from all sources (within each source category) using MACT floor control and establish the floor level equal to the highest test condition average.

As discussed in greater detail in Part Four, Section VI, incinerators with waste heat recovery boilers present a unique situation for dioxin/furan control. Our data base shows that incinerators equipped with waste heat recovery boilers have significantly higher dioxin/furan emissions compared to other incinerators. In the waste heat recovery boiler, combustion gas is exposed to particles on boiler tubes within the temperature window of 450° F to 650° F, which promotes surface-catalyzed formation of dioxin/furan. Therefore, we establish separate dioxin/furan standards for incinerators with waste heat boilers and incinerators without waste heat boilers.[58] The specified floor control for both waste heat boilers and nonwaste heat boilers is combustion gas temperature control to 400°F or less at the particulate matter control device.[59] Floor levels for waste heat boiler incinerators are much higher, however, because of the dioxin/furan formation during the relatively slow temperature quench in the boiler. See the incinerator dioxin/furan discussion in Part Four, Section VI, of today's rule for more details.

b. What MACT Floor Methodology Is Used for Particulate Matter? We adopt a final MACT floor methodology for particulate matter based on the approaches discussed in the May 1997 NODA. For incinerators, the final MACT floor is determined through engineering principles and information, coupled with analysis of the emissions data base. For cement kilns, we base final MACT on the existing requirements of the New Source Performance Standard applicable to Portland cement kilns. Finally, for lightweight aggregate kilns, the final floor level is derived directly from the emissions data base (*i.e.*, the highest test condition average for sources using properly designed and operated floor control).

i. Incinerators. Today's rule identifies MACT floor control as either a well-designed, operated, and maintained fabric filter, ionizing wet scrubber, or electrostatic precipitator, based on engineering information and an evaluation of the particulate matter control equipment used by at least the median of the best performing 12 percent of sources and the emission levels achieved. These types of particulate matter control equipment routinely and consistently achieve superior particulate matter performance relative to other controls used by the incinerator source category and thus represent MACT. Using generally accepted engineering information and principles, we then identify an emission level that well-designed, operated and maintained fabric filters, ionizing wet scrubbers, and electrostatic precipitators routinely achieve.

The floor level is not directly identified from the emissions data base as the highest test condition average for sources using a fabric filter, ionizing wet scrubber, or electrostatic precipitator. The hazardous waste combustor incinerator data base, however, was used as a tool to determine if the identified floor level, established on generally accepted engineering information and principles, is in general agreement with available particulate matter data. This is because we do not have adequate data on the features of the control devices to accurately distinguish only those devices that are well-designed, operated, and maintained and thus representative of MACT. Several sources in the emissions data base that are equipped with fabric filters, ionizing wet scrubbers, or electrostatic precipitators have emission levels well above the emission levels of other sources equipped with those devices. This strongly suggests that the higher levels are not representative of those achieved by well-designed, operated, and maintained units, even when normal operating variability is considered. We accordingly did not use these data in establishing the standard. See *Kennecott* v. *EPA*, 780 F.2d 445, 458 (4th Cir. 1985) (EPA "can reject data it reasonably believes to be unreliable including performance data that is higher than other plants operating the same control technology.")

ii. Cement Kilns. As discussed in the May 1997 NODA and in more detail in the standards section for cement kilns in Part Four, Section VII, we base the MACT floor emission level on use of a fabric filter or electrostatic precipitator to achieve the New Source Performance Standard for Portland cement kilns. The MACT floor is equivalent to and expressed as the current New Source Performance Standard of 0.15 kg/Mg dry feed (0.30 lb/ton dry feed). In the NPRM and the May 1997 NODA, we proposed to express the particulate matter standard on a concentration basis. However, because we are not yet requiring sources to document compliance with the particulate matter standard by using a particulate matter continuous emissions monitoring system in this final rule, we establish and express the floor emission level equivalent to the New Source Performance Standard. Commenters' concerns about separate MACT pools for particulate matter, semivolatile metals, and low volatile metals are discussed in Part Four, Section VII.

iii. Lightweight Aggregate Kilns. All lightweight aggregate kilns burning

[58] We concluded that separate standards to control other hazardous air pollutants were not needed for waste heat boiler-equipped incinerators versus other incinerators. That is, whether or not the incinerator is equipped with a waste heat recovery boiler is only of concern for dioxin/furan emissions, not the other hazardous air pollutants.

[59] Wet particulate matter control devices (*e.g.*, venturi scrubbers) inherently preclude dioxin/furan formation because, (1) They do not suspend particulate matter in the combustion gas flow as do fabric filters and electrostatic precipitators, and (2) gas temperatures are below 400°F in the scrubber. Given this, floor control is use of a wet particulate matter control device or control of combustion gas temperature to 400°F or below at the inlet to a dry particulate matter control device.

hazardous waste are equipped with fabric filters. We could not distinguish only those sources with fabric filters better designed, operated, and maintained than others, and thus represent MACT control. Because we could not independently use engineering information and principles to otherwise distinguish which well-designed, operated, and maintained fabric filters are routinely achieving levels below the highest test condition average in the emissions data base (*i.e.*, considering the high inlet grain loadings for lightweight aggregate kilns), we establish the floor level as that highest test condition average emission level. Commenters concerns about a high floor level and separate MACT pools for particulate matter, semivolatile metals, and low volatile metals are discussed in Part Four, Section VIII.

c. Metals and Total Chlorine. This rule establishes MACT standards for mercury; semivolatile metals comprised of combined emissions of lead and cadmium; low volatility metals comprised of combined emissions of arsenic, beryllium, and chromium; and total chlorine comprised of combined emissions of hydrogen chloride and chlorine gas. As shown by the following analysis, these hazardous air pollutants are all controlled by the best performing sources, at least in part, by feedrate control of the metal or chlorine in the hazardous waste. In addition to hazardous waste feedrate control, some of the hazardous air pollutants also are controlled by air pollution control equipment. Both semivolatile metals and low volatile metals are controlled by a combination of hazardous waste metal feedrate control and by particulate matter control equipment. Total chlorine is controlled by a combination of feedrate control and, for hazardous waste incinerators, scrubbing equipment designed to remove acid gases.

i. How Are the Metals and Chlorine Floor Control(s) Identified? We follow the language of CAA section 112(d)(3) to identify the control techniques used by the best performing sources. The hazardous waste incinerator and hazardous waste cement kiln source categories are comprised of 186 and 33 sources, respectively. From the statutory language, we conclude that for this analysis the control techniques used by the best performing 6% of sources represents the average of the best performing 12% of the sources in those categories. It follows, therefore, that floor control for metals and chlorine is the technique(s) used by the best performing 12 incinerators and two cement kilns.

Because the hazardous waste lightweight aggregate kiln source category is comprised of only 10 sources, we follow the language of section 112(d)(3)(B) to identify the control technique(s) used by the three best performing sources, which represents the median of the best performing five sources.

Our floor control analysis indicates that the best performing 12 incinerators, two cement kilns, and three lightweight aggregate kilns all use hazardous waste feedrate control to limit emissions of mercury, semivolatile metal, low volatile metal, and total chlorine. For the semivolatile and low volatile metals, the best performing sources also use particulate matter control as part of the floor control technique. In addition, the best performing incinerator sources also control total chlorine and mercury with wet scrubbing. Accordingly, we identify floor control for semivolatile metal and low volatile metal as hazardous waste feedrate control plus particulate matter control, and floor control for incinerators for total chlorine and mercury as hazardous waste feedrate control plus wet scrubbing.

ii. What is the Rationale for Using Hazardous Waste Feedrate Control as MACT Floor Control Technique? As discussed above, MACT floor control for mercury, semivolatile metals, low volatile metals, and total chlorine is based on, or at least partially based on, feedrate control of metal and chlorine in the hazardous waste. The feedrate of metal hazardous air pollutants will affect emissions of those pollutants, and the feedrate of chlorine will affect emissions of total chlorine (*i.e.*, hydrochloric acid and chlorine gas) because metals and chlorine are elements and are not destroyed during combustion. Emissions controls, if any, control only a percentage of the metal or total chlorine fed. Therefore, as concentrations of metals and total chlorine in the inlet to the control device increase, emissions increase.

At proposal, we identified hazardous waste feedrates as part of the technology basis for the proposed floor emission standards.[60] MACT maximum theoretical emission concentrations[61] (MTECs) were established individually for mercury, semivolatile metals, low volatile metals, and total chlorine at a level equal to the highest MTEC of the average of the best performing 12% of sources. For some hazardous air pollutants, hazardous waste feedrate control of metals and chlorine was identified as the sole component of floor control (*i.e.*, where the best performing existing sources do not use pollution control equipment to remove the hazardous air pollutant). Examples include mercury and total chlorine from cement kilns. For other hazardous air pollutants, we identified hazardous waste feedrate control of metals and chlorine as a partial component of MACT floor control (*e.g.*, floor control for semivolatile metals include good particulate matter control in addition to feedrate control of semivolatile metals in hazardous waste).

In the May 1997 NODA, we continued to consider hazardous waste feedrate control of metals and chlorine as a valid floor control technology. However, rather than defining a specific MACT control feedrate level (expressed as a MTEC), we instead relied on another analysis tool, an emissions breakpoint analysis, to identify sources feeding metals and/or chlorine at high (and not MACT) levels. At the time, we believed that the breakpoint analysis was a less problematic approach to identify sources using MACT floor control than the approaches proposed initially.[62]

Given commenters' subsequent concerns with the emissions breakpoint analysis as well (see discussion in Section C below), we conclude that specifying MTECs as MACT control (partially or solely) is necessary to properly reflect the feedrate component of MACT control.

Notwithstanding how the MACT floor MTEC is defined, many commenters suggest that our consideration of hazardous waste feedrate as a floor control technique is inappropriate in a technology-based rulemaking and not permissible under the CAA. Commenters also state that hazardous waste feedrate control is not a control technique due to the wide variations in metals and chlorine in the hazardous waste generated at a single facility location. Further, they believe even greater variations occur in metals and chlorine levels in the hazardous waste generated at multiple production sites representing different industrial sectors. Thus, commenters suggest that basing a floor emission level on data from sources that feed hazardous waste with low levels of metals or chlorine is tantamount to declaring that wastes with higher levels of metals or chlorine are not to be generated. Other

[60] See 61 FR at 17366.

[61] We developed a term, Maximum Theoretical Emissions Concentration, to compare metals and chlorine feedrates across sources of different sizes. MTEC is defined as the metals or chlorine feedrate divided by the gas flow rate, and is expressed in μg/dscm.

[62] Comments had objected to our proposed approach of defining MTECs as too reliant on engineering inspection of the data.

commenters note, however, that hazardous waste feedrate control must be considered as a floor control technique because feedrate control is being used as a control means to comply with existing RCRA regulations for these combustors. Still other commenters recommend that we establish uniform hazardous waste feedrate limits (*i.e.*, base the standard on an emission concentration coupled with a hazardous waste feedrate limit on metals and chlorine) across all three hazardous waste combustor source categories. Please refer to Part Five, Section VII.D.3.c.iv of today's preamble and the Comment Response Document for detailed responses to these comments.

We do not accept the argument that control of hazardous waste metals and chlorine levels in hazardous waste cannot be part of the floor technology. First, control of hazardous air pollutants in hazardous waste feedstock(s) can be part of a MACT standard under section 112(d)(2)(A), which clearly indicates that material substitution can be part of MACT. Second, hazardous waste combustors are presently controlling the level of metal hazardous air pollutants and chlorine in the hazardous waste combusted because of RCRA regulatory requirements. (See § 266.103(c)(1) and (j) where metal and chlorine feedrate controls are required, and where monitoring of feedrates are required.) Simply because these existing controls are risk-based, rather than technology-based, does not mean that they are not means of controlling air emissions cognizable under the CAA. Floor standards are to be based on "emission limitation[s]" achieved by the best existing sources. An "emission limitation" includes "a requirement established by the * * * Administrator which limits the quantity, rate, or concentration of emissions. * * * including any requirement relating to the operation * * * of a source. * * *" CAA section 302(k). This is precisely what current regulations require to control metal and chlorine levels in hazardous waste feed.

Commenters also note that contemplated floor levels were lower than the feed limits specified in current regulations for boilers and industrial furnaces. This is true, but not an impediment to identifying achievable MACT floor levels. Actual performance levels can serve as a basis for a floor. An analogy would be where a group of facilities achieve better capture efficiency from air pollution control devices than required by existing rule. That level of performance (if generally achievable) can serve as the basis for a floor standard. Accordingly, we use hazardous waste feedrate, entirely or partially, to determine floor levels and beyond-the-floor levels for mercury, semivolatile metals, low volatile metals, and total chlorine.

iii. How Are Feedrate and Emissions Levels Representative of MACT Floor Control Identified? After identifying feedrate control as floor control, we use a data analysis method called the "aggregate feedrate approach" to establish floor control hazardous waste feedrate levels and emission levels for mercury, semivolatile metals, low volatile metals, and total chlorine. The first step in the aggregate feedrate approach is to identify an appropriate level of aggregated mercury, semivolatile metals, low volatile metals, and total chlorine feedrate control, expressed as a MTEC, being achieved in practice by the best performing incinerator, cement kiln and lightweight aggregate kiln sources. This aggregate MTEC level is derived only from the sources using MACT floor emission controls.

The aggregate feedrate approach involves four steps: (1) Identifying test conditions in the data base where data are available to calculate hazardous waste feedrate MTECs for all three metal hazardous air pollutant groups and total chlorine; (2) screening out test conditions where a source was not using the MACT floor emission control device for hazardous air pollutants that are cocontrolled by an air pollution control device[63]; (3) ranking the individual hazardous air pollutant MTECs, from the different source test conditions, from lowest to highest and assigning each a numerical rank, with a rank of one being the lowest MTEC; and (4) summing, for each test condition, the individual ranking for each of the hazardous air pollutants to determine a composite ranking. The total sum is used to provide an overall assessment of the aggregate level of hazardous air pollutants in the hazardous waste for each test condition. The hazardous waste feed streams with lower total sums (*i.e.*, hazardous air pollutant levels) are "cleaner" in aggregate than those with higher total sums.[64] (See the technical support document for more details on this procedure.[65])

The aggregate MTEC ranking process results in aggregate feedrate data from nine incinerators, 10 cement kilns, and 10 lightweight aggregate kilns from which to select an appropriate level of feedrate control representative of MACT floor control.[66] We considered selecting the source with either the highest or lowest aggregate MTEC in each source category to represent MACT floor control, but did not believe this was appropriate based on concerns about representativeness and achievability. We conclude that it is reasonable, however, to consider the best 50% of the sources for which we have data in each source category as the best performing sources. This is because, for incinerators and cement kilns, we have only a few sources with complete aggregate MTEC data relative to the size of the source category. The best 50% of the sources for these categories equates to five sources, given that we have aggregate MTEC data for nine incinerators and 10 cement kilns. For lightweight aggregate kilns, this equates also to five sources given that we have aggregate MTEC data for 10 lightweight aggregate kiln sources.

Additionally, we conclude it is appropriate to identify a feedrate MTEC representative of floor control based on the median of the best performing five sources. In selecting a representative sample and identifying the appropriate MTEC floor control level, we draw guidance from section 112(d)(3)(B), in which Congress requires the Agency to use the average of the best performing five sources when faced with small source categories (*i.e.*, less than 30 sources), and therefore limited data, to establish a MACT floor. In addition, this methodology is reasonable and appropriate because it allows consideration of a number of best performing sources (*i.e.*, five), which is within the range of reasonable values we could have selected.

We considered an approach that selected both the control technique and level of control as the average of the best performing 12% of incinerator and

[63] For example, to potentially be considered a MACT-controlled incinerator with respect to both the emissions control device and hazardous waste metals and chlorine feedrate, the incinerator must use a wet scrubber for hydrochloric acid and mercury control and must use either a fabric filter, ionizing wet scrubber, or electrostatic precipitator *and* achieve the floor particulate matter level of 0.015 gr/dscf. Similarly, cement kilns must achieve the particulate matter MACT floor (for this analysis only, the New Source Performance Standard was converted to an estimated equivalent stack gas concentration of 0.03 gr/dscf) and lightweight aggregate kilns must meet the particulate matter MACT floor of 0.025 gr/dscf. There is no MACT floor hydrochloric acid emissions control device for cement kilns and lightweight aggregate kilns.

[64] This aggregate hazardous waste MTEC ranking is done separately for each of the three combustor source categories.

[65] USEPA, "Final Technical Support Document for HWC MACT Standards, Volume III: Selection of MACT Standards and Technologies," July 1999.

[66] Only nine incinerators were ultimately used because (1) We have complete metal emissions data on relatively few sources, and (2) many sources do not use particulate matter floor control, a major means of controlling semivolatile metals and low volatile metals.

cement kiln sources for which we have aggregate MTEC data. This approach resulted in using only the best single source as representative of MACT floor control for all existing sources because there are only nine incinerators and 10 cement kilns for which we have adequate aggregate data. However, the level of feedrate control achieved by the single best performing existing source is likely not representative of the range of higher feedrate levels achieved by the best performing existing sources and, indeed, would inappropriately establish as a floor what amounts to a new source standard.

The final step of the aggregate feedrate approach is to determine an emission level that is routinely achieved by sources using MACT floor control(s). Similar to the April 1996 NPRM and May 1997 NODA, we evaluated all available data for each test condition to determine if a hazardous air pollutant is fed at levels at or below the MACT floor control MTEC. If so, the test condition is added to the expanded MACT pool for that hazardous air pollutant.[67] We then define the floor emission level for the hazardous air pollutant/hazardous air pollutant group as the level achieved by the source with the highest emissions average in the MACT expanded pool.

The aggregate feedrate approach is a logical and reasonable outgrowth of the aggregate hazardous air pollutant approach to establish floor emission levels that we discussed in the April 1996 NPRM. The initial proposal determined MACT floors separately for each hazardous air pollutant controlled by a different control technology, but we also proposed an alternative whereby floors would be set on the basis of a source's performance for all hazardous air pollutants.

Many commenters prefer the total aggregate hazardous air pollutant approach over the individual hazardous air pollutant approach because it better ensures that floor levels would be simultaneously achievable. However, we reject the total aggregate approach because it tends to result in floors that are likely to be artificially high, reflective of limited emissions data for all hazardous air pollutants at each facility. These floor levels, therefore, would not reflect performances of the best performing sources for particular hazardous air pollutants. We are assured of simultaneous achievability in our final methodology by: (1) Establishing the MACT floor feedrate control levels on an aggregate basis for metals and chlorine, as discussed above, rather than for each individual hazardous air pollutant; (2) using the particulate matter MACT pool to establish floor levels for particulate matter, semivolatile metals, and low volatile metals; and (3) ensuring that floor controls are not technically incompatible. In fact, our resulting floor emission levels are already achieved in practice by 9 to 40 percent of sources in each of the three source categories, clearly indicating simultaneously achievable standards.[68]

C. What Other Floor Methodologies Were Considered?

This is a brief overview of the major features of the MACT floor methodologies that we proposed in the April 1996 NPRM or discussed in the May 1997 NODA, accompanied by our rationale for not pursuing those methodologies in this final rule.

1. April 19, 1996 Proposal

We proposed the same general approach to identify floor control and floor emission levels as used in today's final rule. The proposal contained an approach to identify the controls used by the best performing sources (*i.e.*, the MACT pool) and then identify an emission level that those controls are achieving. To identify the floor emission level, we considered emissions from all sources using properly designed and operated controls (*i.e.*, the expanded MACT pool) and established a preliminary floor level as the highest test condition average for those sources.

There are three major differences between the proposed approach and today's final approach, however:

a. Emissions Variability. At proposal, we added a statistically-derived emissions variability factor to the highest test condition average in the expanded MACT pool. Today we conclude that emissions variability is considered inherently in the floor methodology. (See discussion in section D below for our rationale for not using a statistically-derived variability factor.)

b. MACT Pool for Particulate Matter, Semivolatile Metals, and Low Volatile Metals. At proposal, we identified separate and different MACT pools (and associated MACT controls) for particulate matter, semivolatile metals, and low volatile metals, even though all three are controlled by a particulate matter control device. Commenters said this is inappropriate and we concur. Specifying the MACT floor particulate matter emission control device individually for these pollutants is likely to result in three different definitions of floor control. Thus, the same particulate matter control device would need to meet three different design specifications. As a practical matter, the more stringent specification would prevail. But, this highlights the impracticability of evaluating floor emission control for these standards individually rather than in the aggregate.

As discussed in the May 1997 NODA, today's approach uses the same initial MACT pool to establish the floor levels for particulate matter, semivolatile metals, and low volatile metals. The initial MACT pool is comprised of those sources meeting the emission control component of MACT control. To establish the semivolatile metal and low volatile metal floor levels, the particulate matter MACT pool is then analyzed to consider MACT hazardous waste feedrate control first for semivolatile metals and then for low volatile metals, using the aggregate feedrate approach discussed above.

c. Definition of MACT Control. At proposal, we defined MACT emissions control by specifying the design of the emissions control device. Commenters suggested that this was problematic because: (1) Our data base had limited data on design of the control device; (2) some of our available data were incorrect; and (3) the parameters the Agency was using to characterize MACT control did not adequately correlate with control efficiency. Given these concerns, our May 1997 NODA contained an emissions breakpoint approach to identify those sources that appeared to have anomalously higher emissions than other sources in the potential MACT pool. Our rationale was that given the anomalously high emissions, those sources were not, in fact, using MACT control.

Commenters express serious concerns about the validity of the nonstatistical approach used to identify the breakpoint. After considering various statistical approaches to identify an emissions breakpoint, we conclude that the emissions breakpoint approach is problematic.[69] For these reasons, we are

[67] The expanded MACT pool for each hazardous air pollutant is comprised of test conditions from sources equipped with the prescribed MACT floor emission control device, if any, and feeding hazardous waste at an MTEC not exceeding the MACT floor MTEC for that hazardous air pollutant.

[68] Our analysis shows that approximately nine percent of incinerators, 27 percent of cement kilns, and 40 percent of lightweight aggregate kilns currently operating can meet all of the floor levels simultaneously. See USEPA, "Final Technical Support Document For HWC MACT Standards, Volume V: Emissions Estimates and Engineering Costs," July 1999.

[69] To improve the rigor of our breakpoint approach, we investigated a modified Rosner "outlier" test that: (1) Uses a single tailed test to consider only high "outliers" (*i.e.*, test conditions

not defining MACT emissions control by design parameters or using an emissions breakpoint approach to identify MACT emissions or feedrate control. Rather, the MACT floor emission control equipment, where applicable, is defined generically (*e.g.*, electrostatic precipitator, fabric filter), and the aggregate feedrate approach is used to define MACT floor feedrates. We believe the aggregate feedrate approach addresses the concerns that commenters raise on the proposed approach because it more clearly defines MACT control and relies less on engineering judgment.

2. May 1997 NODA

We have incorporated into the final rule several of the procedures discussed in the May 1997 NODA. The NODA explained why it is inappropriate to add a statistically-derived emissions variability factor to the highest test condition average of the expanded MACT pool. Despite comments to the contrary, we conclude that emissions variability is inherently considered in the floor methodology. See discussion in section D below.

In addition, the NODA discussed using the same initial MACT pool to establish the floor levels for particulate matter, semivolatile metals, and low volatile metals. We use this same approach in this final rule. Commenters generally concurred with that approach.

As discussed above, we considered using an emissions breakpoint technique, but conclude that this approach is problematic and did not use the approach for this rule.

D. How Is Emissions Variability Accounted for in Development of Standards?

The methodology we use to establish the final MACT emission standards intrinsically accounts for emissions variability without adding statistically-derived emissions variability factors. Many commenters strongly suggest that statistically-derived emissions variability factors must be added to the emission levels we identify from the data base as floor emission levels to ensure that the standards are routinely achievable.[70] Other commenters suggest that our floor methodology inherently accounts for emissions variability. We discuss below the types of emissions variability and why we conclude that emissions variability is inherently accounted for by our methodology.

We account for three types of emissions variability in establishing MACT standards: (1) Within test condition variability among test runs (a test condition is comprised of at least three runs that are averaged); (2) imprecision in the stack test method; and (3) source-to-source emissions variability attributable to source-specific factors affecting the performance of the same MACT control device. (See, *e.g.* *FMC Corp.* v. *Train*, 539 F.2d 973, 985–86 (4th Cir. 1976), holding that variability in performance must be considered when ascertaining whether a technology-based standard is achievable.) The following sections discuss the way in which we account for these types of variability in the final rule.

1. How Is Within-Test Condition Emissions Variability Addressed?

Inherent process variability will cause emissions to vary from run-to-run within a test condition, even if the stack method is 100 percent precise and even though the source is attempting to maintain constant operating conditions. This is caused by many factors including: Minor changes in the feedrate of feedstreams; combustion perturbations (*e.g.*, uncontrollable, minor fluctuations in combustion temperature or fan velocity); changes in the collection efficiency of the emission control device caused by fluctuations in key parameters (*e.g.*, power input to an electrostatic precipitator); and changes in emissions of materials (*e.g.*, sulfur dioxide) that may cause test method interferences.

At proposal, we used a statistical approach to account for emissions variability. See 61 FR at 17366. The statistical approach identified an emissions variability factor, which was added to the log-mean of the emission level being achieved based on the available "short-term" compliance test data. We called this emission level the "design level." The variability factor was calculated to ensure that the design level could be achieved 99 percent of the time, assuming average within-test condition emissions variability for the source using MACT control.

In the May 1997 NODA, we discussed alternative emission standards developed without using a statistically-derived variability factor. Adding such a variability factor was determined inappropriate because it sometimes resulted in nonsensical results. For example, the particulate matter MACT floor level for incinerators under one floor methodology would have been higher than the current RCRA standard allows, simply due to the impact of an added variability factor. In other cases, the floor levels would have been much higher than our experience would indicate are routinely being achieved using MACT control. We reasoned that these inappropriate and illogical results may flow from either the data base used to derive the variability factor (*e.g.*, we did not have adequate information to screen out potentially outlier runs on a technical basis) or selecting an inappropriate floor-setting test condition as the design level (*e.g.*, we did not have adequate information on design, operation, and maintenance of emissions control equipment used by sources in the emissions data base to definitively specify MACT control).

Consequently, we reasoned that adequately accounting for within test condition emissions variability is achieved where relatively large data sets are available to evaluate for identifying the floor level. Large sets of emissions data from MACT sources, which have emissions below the floor level, are likely to represent the range of emissions variability. For small data sets (*e.g.*, dioxin/furan emissions for waste heat recovery boiler equipped incinerators; dioxin/furan emissions data for lightweight aggregate kilns), we acknowledged that the same logic would not apply. For these small data sets, the floor level was set at the highest run for the MACT source with the highest test condition average emissions. Many commenters suggest that our logic was flawed. Commenters say that, if we desire the floor level to be achievable 99 percent of the time (*i.e.*, the basis for the statistically-derived variability factor at proposal), the emissions data base is far too small to identify the floor level as the highest test condition average for sources using MACT control.

We conclude, however, that the final floor levels identified, using the procedures discussed above (*i.e.*, without adding a statistically-derived emissions variability factor), are levels that can be consistently achieved by well designed, operated, and maintained MACT sources. We

that anomalously high emissions, not necessarily true outliers in the statistical sense); (2) presumes that any potential "outliers" are at the 80th percentile value or higher; and (3) has a confidence level of 90 percent. We abandoned this statistical approach because: (1) Although modifications to the standard Rosner test were supportable, the modified test has not been peer-reviewed; (2) although the target confidence level was 90 percent, the true significance level of the test, as revised, is inappropriately low—approximately 80 percent; and (3) the "outlier" test does not identify MACT-like test conditions because it only identifies anomalously high test conditions rather than the best performing test conditions.

[70] One commenter recommends specific statistical approaches to calculate variability factors and provides examples of how the statistical methods should be applied to our emissions data base. See comment number CS4A-00041.

conclude this because our emissions data base is comprised of compliance test data generated when sources have an incentive to operate under worst case conditions (*e.g.*, spiking metals and chlorine in the waste feed; detuning the emissions control equipment). Sources choose to operate under worst case conditions during compliance testing because the current RCRA regulations require that limits on key operating parameters not exceed the values occurring during the trial burn. Therefore, these sources conduct tests in a manner that will establish a wide envelope for their operating parameter limits in order to accommodate the expected variability (*e.g.*, variability in types of wastes, combustion system parameters, and emission control parameters). See 56 FR at 7146 where EPA likewise noted that certain RCRA operating permit test conditions are to be "representative of worst-case operating conditions" to achieve needed operating flexibility. One company that operates several hazardous waste incinerators at three locations comments that, because of the current RCRA compliance regime, which is virtually identical to the compliance procedures of today's MACT rule, "the result is that units must be tested at rates which are at least three standard deviations harsher than normal operations and normal variability in order to simulate most of the statistical likelihood of allowable emission rates." [71] The commenter also states that because of the consequences of exceeding an operating parameter limit under MACT, "* * * clearly a source will test under the worst possible operating conditions in order to minimize future (exceedances of the limits)." Finally, the commenter says that "Because of variability and the stiff consequences of exceeding these limits, operators do not in fact operate their units anywhere near the limits for sustained periods of time, but instead tend to operate several standard deviations below them, or at about 33 to 50% of the limits." [72]

We conclude from these comments, which are consistent with engineering principles and with many discussions with experts from the regulated community, that MACT sources with compliance test emissions at or below the selected floor level are achieving those levels routinely because these test conditions are worst-case and are defined by the source itself to ensure 100 percent compliance with the relevant standard.

We acknowledge, however, that mercury is a special case because our mercury emission data may not be representative of worst-case conditions. As discussed in Section I.B.3 above, sources did not generally spike mercury emissions during RCRA compliance testing because they normally feed mercury at levels resulting in emissions well below current limits.[73] Although our data base for mercury is comprised essentially of normal emissions, emissions variability is adequately accounted for in setting floor levels. First, mercury emissions variability is minimal because the source can readily control emissions by controlling the feedrate of mercury.[74] For cement and lightweight aggregate kilns, mercury is controlled solely by controlling feedrate. Given that there is no emission control device that could have perturbations affecting emission rates, emissions variability at a given level of mercury feedrate control is relatively minor. Any variability is attributable to variability in feedrate levels due to feedstream sampling and analysis imprecision, and stack method imprecision (see discussion below).

Second, our emissions data indicate that the mercury floor levels are being achieved by a wide margin, which is a strong indication that a variability factor is not needed. Only one of the 15 incinerators using MACT floor control exceeds the design level for the floor emission level.[75] In addition, only seven of 45 incinerators for which we have mercury emissions data exceed the design level, and two of those eight are know to have spiked mercury in the hazardous waste feed during compliance testing. Only six of the 45 incinerators exceed the floor emission level.

The situation is similar for cement kilns and lightweight aggregate kilns. Only two of 22 cement kilns using floor control exceed the design level, only five of the 33 kilns in the source category exceed the design level, and only one of the 33 kilns exceeds the floor emission level. Only one of nine lightweight aggregate kilns using floor control exceeds the design level, and only two of the 10 kilns in the source category exceed the design level (and one of those kilns is known to have spiked mercury in the hazardous waste feed during compliance testing). Only one of the 10 kilns exceeds the floor emission level, and that kiln spiked mercury.

We conclude from this analysis that the mercury floor emission levels in this rule are readily achieved in practice even though our mercury emissions data were not spiked (*i.e.*, they may not represent worst-case emissions), and therefore a separate variability factor is not needed.

2. How Is Waste Imprecision in the Stack Test Method Addressed?

Method precision is a measure of how closely emissions data are grouped together when measuring the same level of stack emissions (*e.g.*, using a paired or quad test train). Method imprecision is largely a function of the ability of the sampling crew and analytical laboratory to routinely follow best practices. Precision can be affected by: (1) Measurement of ancillary parameters including gas flow rate, pressure, and temperature; (2) recovery of materials from the sampling train; and (3) cleaning, concentrating, and quantitating the analyte.

Several commenters state that we must add a factor to the selected floor level to account for method imprecision in addition to a factor to account for within-test condition emissions variability. We investigated the imprecision for the stack methods used to document compliance with today's rule and determined that method imprecision may be significant for some hazardous air pollutant/method combinations.[76] Our results indicate, however, that method precision is much better than commenters claim, and that as additional data sets become available,

[71] See Comment No. CS4A-00029.A, dated August 16, 1996.

[72] To estimate the compliance cost of today's rule, we assumed that sources would design their systems to meet an emission level that is 70% of the standard, herein after called the "design level."

[73] Three of 23 incenerators used to define MACT floor (*i.e.*, sources for which mercury feedrate data are available) are known to have spiked mercury No cement kilns used to define MACT floor (*e.g.*, excluding sources that have stopped burning hazardous waste) are known to have spiked mercury. Only one of ten lightweight aggregate kilns used to define MACT floor is known to have spiked mercury.

[74] Although incenerators are generally equipped with wet scrubbers that can have a mercury removal efficiency of 15 to 60 percent, feedrate control is nonetheless the primary means of mercury emissions control because of the relatively low removal efficiency provided by wet scrubbers.

[75] Commenters note that the mercury levels fed during RCRA compliance testing may not represent the normal range of feedrates, and thus the compliance test emission levels may not be representative of emission levels achieved in practice. Given that only one of 15 incinerators using floor control exceeds the design level, it appears that the floor emission level is, in fact, being achieved in practice. Some of these 15 sources were likely feeding mercury at the high end of their normal range, even though others may have been feeding mercury at normal or below normal levels. This is also the situation of cement kilns where only two of 2 kilns using floor control exceed the design level, and for lightweight aggregate kilns where only one of nine kilns using floor exceeds the design level.

[76] USEPA, "Final Technical Support Document for HWC MACT Standards, Volume III: Selection of MACT Standards and Technologies," July 1999.

the statistically-derived precision bars for certain pollutants are reasonably expected to be reduced significantly. This is mainly because data should become available over a wider range of emission levels thus reducing the uncertainty that currently results in large precision bar projections for some hazardous air pollutants at emission levels that are not close to the currently available paired and quad-train emissions data.

We conclude that method imprecision, in selecting the floor levels for hazardous waste combustors, is adequately addressed for the same reasons that we accounted for within-test condition emissions variability. Method precision is simply a factor that contributes to within-test condition variability. As discussed above, sources consider emissions variability when defining their compliance test operating conditions to balance emissions standards compliance demonstrations with the need to obtain a wide operating envelope of operating parameter limits.

3. How Is Source-to-Source Emissions Variability Addressed?

If the same MACT control device (*i.e.*, same design, operating, and maintenance features) were used at several sources within a source category, emissions of hazardous air pollutants from the sources could vary. This is because factors that affect the performance of the control device could vary from source to source. Even though a device has the same nominal design, operating, and maintenance features, those features could never be duplicated exactly. Thus, emissions could vary from source to source.

We agree that this type of emissions variability must be accounted for in the standards to ensure the standards are achieved in practice. Source-to-source emissions variability is addressed by identifying the floor emission level as the highest test condition average for sources in the expanded MACT pool, as discussed above.[77]

The test condition average emissions for sources in the expanded MACT pool for most standards often vary over several orders of magnitude. That variability is attributable partially to the type of source-to-source emissions variability addressed here as well as the inclusion of sources with varying levels of MACT control in the pool. Sources are included in the expanded MACT pool if they have controls equivalent to or better than MACT floor controls. We are unable to identify true source-to-source emissions variability for sources that actually have the same MACT controls because we are unable to specify in sufficient detail the design, operating, and maintenance characteristics of MACT control. Such information is not readily available. Therefore, we define MACT control only in general terms. This problem (and others) are addressed in today's rule by selecting the MACT floor level based on the highest test condition average in the expanded MACT pool, which accounts for source-to-source variability.

We also conclude that the characteristics of the emissions data base coupled with the methodology used to identify the floor emission level adequately accounts for emissions variability so that the floor level is routinely achieved in practice by sources using floor control. As further evidence, we note that a large fraction—50 to 100 percent—of sources in the data base currently meet the floor levels regardless of whether they currently use floor control.[78]

VI. What Are the Standards for Existing and New Incinerators?

A. To Which Incinerators Do Today's Standards Apply?

The standards promulgated today apply to each existing, reconstructed, and newly constructed incinerator (as defined in 40 CFR 260.10) burning hazardous waste. These standards apply to all major source and area source incinerator units and to all units whether they are transportable or fixed sources. These standards also apply to incinerators now exempt from RCRA stack emission standards under §§ 264.340(b) and (c).[79] Additionally, these standards apply to thermal desorbers that meet the definition of a RCRA incinerator, and therefore, are not regulated under subpart X of part 264.

B. What Subcategorization Options Did We Evaluate?

We considered whether it would be appropriate to subcategorize incinerators based on several factors discussed below and conclude that subcategorization is not necessary. However, for waste heat recovery boiler-equipped incinerators, we establish a separate emission standard solely for dioxin/furan. We explained our rationale for separate dioxin/furan standards for waste heat recovery boilers in the May 1997 NODA (62 FR 24220). We said that waste heat recovery boilers emit significantly higher dioxin/furan emissions than other incinerators, probably because the heat recovery boiler precludes rapid temperature quench of the combustion gases to below 400°F, therefore warranting separate standards for dioxin/furan only (*i.e.*, the waste heat boiler does not affect achievability of the other emission standards).

We considered several options for subcategorizing the hazardous waste incinerator source category based on: (1) Size of the unit (*e.g.*, small and large incinerators); (2) method of use of the hazardous waste incinerator (*e.g.*, commercial hazardous waste incinerator, captive (on-site) unit); (3) facility design (*e.g.*, rotary kiln, liquid injection, fluidized bed, waste heat boiler), and (4) type of waste fed (*e.g.*, hazardous waste mixed with radioactive waste, munitions, liquid, solid or aqueous wastes). Subcategorization would be appropriate if one or more of these factors affected achievability of emission standards that were established without subcategorization. In the May 1997 NODA (62 FR 24219), we stated that subdividing the hazardous waste incinerator source category by size or method of use (such as commercial or on-site) would be inappropriate because it would not result in standards that are more achievable. Many of the standards would be the same for the subcategories while the remainder would be more stringent. That conclusion is not altered by any of the changes in today's final rule. Therefore, subcategorization would add complexity without any tangible achievability benefits.

In the same notice, we also requested comment on subcategorization and/or a deferral of standards for mixed waste incinerators based on a comment from the Department of Energy that this type of incinerator has several unique features that warrant subcategorization.

[77] Because of the need to account for this type of variability, we disagree with those commenters recommending that: (1) The floor emission level be identified as the average emission level achieved by the 12 percent of source with the lowest emissions; and (2) it is inappropriate to base the floor emission level on sources using floor control but that are not within the 12 percent of sources with the lowest emissions (*i.e.*, the expanded MACT pool should not be used to identify floor emission levels). The floor emission level must be achieved in practice by sources using the appropriately designed and operated floor control. Thus, emission levels being achieved by all sources using the appropriately designed and operated floor control (*i.e.*, including sources using floor control but having emission levels greater than the average of the emissions achieved by the 12 percent of sources with the lowest emissions) must be considered when identifying the floor emission level.

[78] USEPA, "Final Technical Support Document for HWC MACT Standards, Volume III: Selection of MACT Standards and Technologies," July 1999.

[79] Sections 264.340(b) and (c) exempt from stack emission standards incinerators (a) burning solely ignitable, corrosive or reactive wastes under certain conditions, and (b) if the waste contains no or insignificant levels of hazardous constituents.

There are three Department of Energy mixed waste incinerators. Each mixed waste incinerator has a different type of operation and different air pollution control devices, and two of the sources have high dioxin/furan and mercury emissions (several times the dioxin/furan standards adopted in today's rule). We received several comments on the mixed waste incinerator issue. These commenters contend that, because of the radioactive component of the wastes, mixed waste incinerators pose greater than average risk, and regulating these facilities should not be deferred. These commenters also note that the MACT controls are not incompatible with mixed waste incinerators and thus these incinerators can readily achieve the emission standards. We agree that MACT controls are compatible with mixed waste incinerators, with one exception discussed below, and do not establish a mixed waste incinerator subcategory.

The standards promulgated today are generally achievable by all types and sizes of incinerators when using MACT controls. We recognize, however, that each of the possible subcategories considered has some unique features. At the same time, upon consideration of each individual issue, we conclude that unique features of a particular hazardous waste incinerator can be better dealt with on an individual basis (through the permit process or through petitions) instead of through extensive subcategorization. As an example, we agree with the Department of Energy's contentions that feedstream testing for metals is problematic for mixed waste incinerators due to radioactivity of the waste and because risk from metal emissions is minimal in mixed waste incinerators that use HEPA filters to prevent radioactive emissions. Section 63.1209(g)(1) of today's rule provides a mechanism for petitioning the Administrator for use of an alternative monitoring method.[80] This petition process appears to be an appropriate vehicle for addressing the concerns expressed by the Department of Energy about feedstream testing for metals and use of HEPA filters at its mixed waste incinerators.

In summary, our decision not to subcategorize hazardous waste incinerators is based on four reasons:

(1) Size differences among hazardous waste incinerators do not necessarily reflect process, equipment or emissions differences among the incinerators. Many small size hazardous waste incinerators have emissions lower than those promulgated today even though they are not regulated to those low levels.

(2) Types and concentrations of uncontrolled hazardous air pollutants are similar for all suggested subcategories of hazardous waste incinerators.

(3) The same type of control devices, such as electrostatic precipitators, fabric filters, and scrubbers, are used by all hazardous waste incinerators to control emissions of particular hazardous air pollutants.

(4) The standards are achievable by all types and sizes of well designed and operated incinerators using MACT controls.

C. What Are the Standards for New and Existing Incinerators?

1. What Are the Standards for Incinerators?

We discuss in this section the basis for the emissions standards for incinerators. The emissions standards are summarized below:

STANDARDS FOR EXISTING AND NEW INCINERATORS

Hazardous air pollutant or hazardous air pollutant surrogate	Emissions standard [1]	
	Existing sources	New sources
Dioxin /Furan	0.20 ng TEQ [2]/dscm; or 0.40 ng TEQ/dscm and temperature at inlet to the initial particulate matter control device ≤ 400°F.	0.20 ng TEQ/dscm.
Mercury	130 µg/dscm	45 µg/dscm.
Particulate Matter	34mg/dscm (0.015gr/dscf)	34mg/dscm (0.015gr/dscf).
Semivolatile Metals	240 µg/dscm	24 µg/dscm.
Low Volatile Metals	97 µg/dscm	97 µg/dscm.
Hydrochloric Acid/Chlorine Gas	77 ppmv	21 ppmv.
Hydrocarbons [3, 4]	10 ppmv (or 100 ppmv carbon monoxide)	10 ppmv (or 100 ppmv carbon monoxide).
Destruction and Removal Efficiency	99.99% for each specific principal organic hazardous constituent, except 99.9999% for specified dioxin-listed wastes.	Same as for existing incinerators.

[1] All emission levels are corrected to 7 percent oxygen.
[2] Toxicity equivalent quotient, the international method of relating the toxicity of various dioxin/furan congeners to the toxicity of 2,3,7,8–TCDD.
[3] Hourly rolling average. Hydrocarbons reported as propane.
[4] Incinerators that elect to continuously comply with the carbon monoxide standard must demonstrate compliance with the hydrocarbon standard of 10ppmv during the comprehensive performance test.

2. What Are the Standards for Dioxins and Furans?

We establish a dioxin/furan standard for existing incinerators of either 0.20 ng TEQ/dscm, or a combination of dioxin/furan emissions up to 0.40 ng TEQ/dscm and temperature at the inlet to the initial dry particulate matter control device not to exceed 400°F.[81] Expressing the standard as a temperature limit as well as a dioxin/furan concentration limit provides better control of dioxin/furan, because sources operating at temperatures below 400°F generally have lower emissions and is consistent with the current practice of many sources. Further, without the lower alternative TEQ limit of 0.20 ng/dscm, sources that may be operating dry particulate matter control devices at temperatures higher than 400°F while achieving dioxin/furan emissions below 0.20 ng TEQ/dscm would nonetheless be required to incur costs to lower gas temperatures. This would not be appropriate because lowering gas temperatures in this case would likely

[80] The petition for an alternative monitoring method should be included in the comprehensive performances test plan submitted for review and approval.

[81] Incinerators that use wet scrubbers as the initial particulate matter control device are presumed to meet the 400°F temperature requirement. Consequently, as a practical matter, the standard for such incinerators is simply 0.4 ng TEQ/dscm.

achieve limited reductions in dioxin/furan emissions (*i.e.*, because emissions are already below 0.20 ng TEQ).

For new incinerators, the dioxin/furan standard is 0.20 ng TEQ/dscm. We discuss below the rationale for these standards.

a. What is the MACT Floor for Existing Sources? We establish the same MACT floor control, as was evaluated in the May 1997 NODA, based on the revised data base and the refinements to the analytical approaches. This floor control is based on quenching of combustion gases to 400°F or below at the dry particulate matter control device.[82] We selected a temperature of 400°F because that temperature is below the temperature range for optimum surface-catalyzed dioxin/furan formation reactions—450°F to 650°F—and most sources operate their particulate matter control device below that temperature. In addition, temperature is an important control parameter because dioxin/furan emissions increase exponentially as combustion gas temperatures at the dry particulate matter control device increase above 400°F.

We identify a MACT floor level of 0.40 ng TEQ/dscm for incinerators other than those equipped with waste heat recovery boilers. As discussed in the May 1997 NODA, the floor level of 0.40 ng TEQ/dscm is based on the highest nonoutlier test condition for sources equipped with dry particulate matter control devices operated at temperatures of 400°F or below or wet particulate matter control devices. We screened out four test conditions from three facilities because they have anomalously high dioxin/furan emissions and are not representative of MACT control practices.[83] Three of these test conditions are from sources that had other test conditions with emission averages well below 0.40 ng TEQ/dscm, indicating that the same facilities can achieve lower emission levels in different operating modes.

We identify a MACT floor level for waste heat boiler-equipped hazardous waste incinerators of 12 ng TEQ/dscm based on the highest emitting individual run for sources equipped with dry particulate matter control devices operated at temperatures of 400°F or below or wet particulate matter control devices. We use the highest run to set the floor level rather than the average of the runs for the test condition to address emissions variability concerns given that we have a very small data set for waste heat boilers. All waste heat boiler-equipped hazardous waste incinerators meet this floor level, except for a new test conducted after the publication of the May 1997 NODA at high temperature conditions that resulted in dioxin/furan emission levels of 47 ng TEQ/dscm. This source is not using MACT control, however, because the temperature at the particulate matter control device exceeded 400°F. Thus, we do not consider emissions from this source in identifying the floor level.

We received numerous and diverse comments on the April 1996 proposal and the May 1997 NODA. While some commenters consider the dioxin/furan standards too high, a large number comment that the standards are too stringent. Many comment that the methodology used for calculating the dioxin/furan MACT floor level is inappropriate and that the cost-effectiveness of the standards is not reasonable. In particular, some commenters suggest separating "fast quench" and "slow quench" units. We have fully addressed this latter concern because we now establish separate dioxin/furan standards for waste heat boilers given that they are a fundamentally different type of process and that they have higher dioxin/furan emissions because of the slow quench across the boiler. We address the other comments elsewhere in the preamble and in the comment response document.

Approximately 65% of all test conditions at all incinerator sources are achieving the 0.40 ng TEQ/dscm level, and over 50% of all test conditions achieve the 0.20 ng TEQ/dscm level. We estimate that approximately 60 percent of incinerators currently meet the TEQ limit as well as the temperature limit. Under the statute, compliance costs are not to be considered in MACT floor determinations. For purposes of compliance with Executive Order 12866 and the Regulatory Flexibility Act, we calculated the annualized cost for hazardous waste incinerators to achieve the dioxin/furan MACT floor levels. Assuming that no hazardous waste incinerator exits the market due to MACT standards, the annual cost is estimated to be $3 million, and the standards will reduce dioxin/furan emissions nationally by 3.4 g TEQ per year from the baseline emissions level of 24.8 g TEQ per year.

b. What Are Our Beyond-the-Floor Considerations for Existing Sources? We investigated the use of activated carbon injection, along with limiting temperatures at the inlet to the initial dry particulate matter control device to 400°F,[84] to achieve two alternative beyond-the-floor emission levels: (1) 0.40 ng TEQ/dscm for waste heat boiler-equipped incinerators (*i.e.*, slow quench) to reduce their emissions to the floor level for other incinerators; and (2) 0.20 ng TEQ/dscm for all incinerators. Activated carbon injection technology is feasible and proven to reduce dioxin/furan emissions by 99 percent or greater.[85] It is currently used by one waste heat boiler-equipped hazardous waste incinerator (Waste Technologies Industries in East Liverpool, Ohio) and many municipal waste combustors.[86] The removal efficiency of an activated carbon injection system is affected by several factors including carbon injection rate and adsorption quality of the carbon. Thus, activated carbon injection systems can be used by waste heat boiler-equipped incinerators to achieve alternative beyond-the-floor emissions of either 0.40 ng TEQ/dscm or 0.20 ng TEQ/dscm.

We conclude that a beyond-the-floor emission level of 0.40 ng TEQ/dscm for waste heat boiler-equipped incinerators is cost-effective but a 0.20 ng TEQ/dscm emission level for all incinerators is not cost-effective. We estimate that 23 waste heat boiler-equipped incinerators will need to install activated carbon injection systems at an annualized cost of approximately $6.6 million. This will result in a sizable reduction of 17.9 g TEQ dioxin/furan emissions per year and will provide an 84 percent reduction in emissions from the floor emission level (21.4 g TEQ per year) for all hazardous waste incinerators. This represents a cost-effectiveness of $370,000 per gram TEQ removed.

When we evaluated the alternative beyond-the-floor emission level of 0.20 ng TEQ/dscm for all incinerators, we determined that 80 hazardous waste incinerators would incur costs to reduce dioxin/furan emissions by 19.5 g TEQ from the floor level (21.4 g TEQ) at an annualized cost of $16.1 million. The cost-effectiveness would be $827,000 per gram of TEQ removed. In addition,

[82] The temperature limit applies at the inlet to a dry particulate matter control device that suspends particulate matter in the combustion gas stream (*e.g.*, electrostatic precipitator, fabric filter) such that surface-catalyzed formation of dioxin/furan is enhanced. The temperature limit does not apply to a cyclone control device, for example.

[83] USEPA, "Technical Support Document for HWC MACT Standards, Volume III: Selection of MACT Standards and Technologies," July 1999, Section 3.1.1.

[84] Limiting the temperature at the dry particulate matter control device reduces surface-catalyzed formation of dioxin/furan and enhances the adsorption of dioxin/furan on the activated carbon.

[85] USEPA, "Technical Support Document for HWC MACT Standards, Volume III: Selection of MACT Standards and Technologies," July 1999.

[86] We have established in a separate rulemaking that activated carbon injection is MACT floor control for municipal waste combustors.

we determined that the vast majority of these emissions reductions would be provided by waste heat boiler-equipped incinerators, and would be provided by the beyond-the-floor emission level of 0.40 ng TEQ/dscm discussed above. The incremental annualized cost of the 0.20 ng TEQ/dscm option for incinerators other than waste heat boiler-equipped incinerators would be $9.5 million, and would result in an incremental reduction of only 1.6 g TEQ per year. This represents a high cost for a very small additional emission reduction from the floor, or a cost-effectiveness of $6.0 million per additional gram of TEQ dioxin/furan removed. Accordingly, we conclude that the 0.20 ng TEQ/dscm beyond-the-floor option is not cost-effective.

We note that dioxin/furan are some of the most toxic compounds known due to their bioaccumulative potential and wide range of adverse health effects, including carcinogenesis, at exceedingly low doses. We consider beyond-the-floor reduction of dioxin/furan emissions a prime environmental and human health consideration. As discussed above, our data base indicates that a small subset of incinerators—those equipped with waste heat recovery boilers—can emit high levels of dioxin/furan, up to 12 ng TEQ/dscm, even when operating the dry particulate matter control device at ≤400°F. We are concerned that such high dioxin/furan emission levels are not protective of human health and the environment, as mandated by RCRA. If dioxin/furan emissions from waste heat boiler-equipped incinerators are not reduced by a beyond-the-floor emission standard, omnibus RCRA permit conditions would likely be needed in many cases. This would defeat our objective of having only one permitting framework for stack air emissions at hazardous waste incinerators (except in unusual cases). Thus, the beyond-the-floor standard promulgated today for waste heat boiler-equipped incinerators is not only cost-effective, but also an efficient approach to meed the Agency's RCRA mandate.

Some commenters suggest that the standard for waste heat boiler-equipped hazardous waste incinerators, which is based on activated carbon injection, be set at levels achieved by activated carbon injection at the Waste Technologies Industries facility—an average of 0.07 ng TEQ/dscm. We determined that this would not be appropriate because of concerns that such a low emission level may not be routinely achievable. An emission level of 0.07 ng TEQ/dscm represents a 99.4 percent reduction in emissions from the floor level of 12 ng TEQ/dscm. Although activated carbon injection can achieve dioxin/furan emissions reductions of 99 percent and higher, we are concerned that removal efficiency may decrease at low dioxin/furan emission levels. We noted our uncertainty about how much activated carbon injection control efficiency may be reduced at low dioxin/furan concentrations in the May 1997 NODA (62 FR at 24220). Several commenters agree with our concern, including Waste Technologies Industries.[87] No commenters provide data or information to the contrary. Because we have data from only one hazardous waste incinerator documenting that an emission level of 0.07 ng TEQ can be achieved, we are concerned that an emission level that low may not be routinely achievable by all sources.

c. What Is the MACT Floor for New Sources? For new sources, the CAA requires that the MACT floor be the level of control used by the best controlled single source. As discussed above, one source, the Waste Technologies Industries (WTI) incinerator in Liverpool, Ohio, uses activated carbon injection. Therefore, we identify activated carbon injection as MACT floor control for new sources. To establish the MACT floor emission level that is being achieved in practice for sources using activated carbon injection, data are available from only WTI. WTI is achieving an emission level of 0.07 ng TEQ/dscm. As discussed above, we are concerned that emission level may not be routinely achievable because the removal efficiency of activated carbon injection may be reduced at such low emission levels. An emission level of 0.20 ng TEQ/dscm is routinely achievable, however. We note that activated carbon injection is MACT floor control for dioxin/furan at new large municipal waste combustors. We established a standard of 13 ng/dscm total mass "equal to about 0.1 to 0.3 ng/dscm TEQ" for these sources (60 FR 65396 (December 19, 1995)), equivalent to approximately 0.20 ng TEQ/dscm. We conclude, therefore, that a floor level of 0.20 ng TEQ/dscm is achievable for new sources using activated carbon injection and accordingly set this as the standard.

d. What Are Our Beyond-the-Floor Considerations for New Sources? As discussed in the May 1997 NODA, a beyond-the-floor standard below 0.20 ng TEQ/dscm would not be appropriate. Although installation of carbon beds would enable new hazardous waste incinerators to achieve lower dioxin/furan levels, we do not consider the technology to be cost-effective. The reduction in dioxin/furan emissions would be very small, while the costs of carbon beds would be prohibitively high. In addition, due to the very small dioxin/furan reduction, the benefit in terms of cancer risks reduced also will be very small. Therefore, we conclude that a beyond-the-floor standard for dioxin/furan is not appropriate.

3. What Are the Standards for Mercury?

We establish a mercury standard for existing and new incinerators of 130 and 45 μg/dscm respectively. We discuss below the rationale for these standards.

a. What Is the MACT Floor for Existing Sources? We are establishing the same MACT floor level as proposed, 130 μg/dscm although, as discussed below, the methodology underlying this standard has changed from proposal. At proposal, the floor standard was based on the performance of either: (1) Feedrate control of mercury at a maximum theoretical emission concentration not exceeding 19 μg/dscm; or (2) wet scrubbing in combination with feedrate control of mercury at a level equivalent to a maximum theoretical emission concentration not exceeding 51 μg/dscm. In the May 1997 NODA, we reevaluated the revised data base and defined MACT control as based on performance of wet scrubbing in combination with feedrate control of mercury at a level equivalent to a maximum theoretical emission concentration of 50 μg/dscm and discussed a floor level of 40 μg/dscm.

Several commenters object to our revised methodology and are concerned that we use low mercury feedrates to define floor control. These commenters state that standards should not be based on sources feeding very small amounts of a particular metal, but rather on their ability to minimize the emissions by removing the hazardous air pollutant. As discussed previously, we maintain that hazardous waste feedrate is an appropriate MACT control technique. We agree with commenters' concerns, however, that previous methodologies to define floor feedrate control may have identified sources feeding anomalously low levels of a metal (or chlorine). To address this concern, we have revised the floor determination methodology for mercury, semivolatile metals, low volatile metals and total chlorine. A

[87] Waste Technologies Industries suggested, however, that after experience with activated carbon injection systems has been attained by several hazardous waste incinerators, the Agency could then determine whether an emission level of 0.07 ng TEQ/dscm is routinely achievable. See comment number 064 in Docket F-97-CS4A-FFFFF.

detailed description of this methodology—the aggregate feedrate approach—is presented in Part Four, Section V of this preamble. Adopting this aggregate feedrate approach, we identify a mercury feedrate level that is approximately five times higher than the May 1997 NODA level and higher than approximately 70% of the test conditions in our data base.

Wet scrubbers also provide control of mercury (particularly mercury chlorides). Given that virtually all incinerators are equipped with wet scrubbers (for control of particulate matter or acid gases), we continue to define floor control as both hazardous waste feedrate control of mercury and wet scrubbing. The MACT floor based on the use of wet scrubbing and feedrate control of mercury is 130 µg/dscm.[88]

The floor level is being achieved by 80% of the test conditions in our data base of 30 hazardous waste incinerators. As already discussed above, consideration of costs to achieve MACT floor standards play no part in our MACT floor determinations, but we nevertheless estimate costs to the hazardous waste incinerator universe for administrative purposes. We estimate that 35 hazardous waste incinerators, assuming no market exit by any facility, will need to adopt measures to reduce mercury emissions at their facilities by 3.46 Mg from the current baseline of 4.4 Mg at an estimated annualized cost $12.2 million, yielding a cost-effectiveness of $3.6 million per Mg of mercury reduced.

b. What Are Our Beyond-the-Floor Considerations for Existing Sources? As required by statute, we evaluated more stringent beyond-the-floor controls for further reduction of mercury emissions from the floor level. Activated carbon injection systems can achieve mercury emission reductions of over 85 percent and we proposed them as beyond-the-floor control in the April 1996 NPRM. In the May 1997 NODA, we reevaluated the use of activated carbon injection[89] as beyond-the-floor control, but cited significant cost-effectiveness concerns. We reiterate these concerns here. Our technical support document[90] provides details of annualized costs and reductions that can be achieved.

In addition, we considered a beyond-the-floor level of 50 µg/dscm based on limiting the feedrate of mercury in the hazardous waste (*i.e.*, additional feedrate control beyond floor control), and conducted an evaluation of the cost of achieving this reduction to determine if this beyond-the-floor level would be appropriate. The national incremental annualized compliance cost to meet this beyond-the-floor level, rather than comply with the floor controls, would be approximately $4.2 million for the entire hazardous waste incinerator industry and would provide an incremental reduction in mercury emissions nationally beyond the MACT floor controls of 0.7 Mg/yr, yielding a cost-effectiveness of $10 million per additional Mg of mercury reduced. Thus, potential benefits in relation to costs are disproportionately low, and we conclude that beyond-the-floor mercury controls for hazardous waste incinerators are not warranted. Therefore, we are not adopting a mercury beyond-the-floor standard.

Many commenters object to our beyond-the-floor standards as proposed, citing high costs for achieving relatively small mercury emission reductions, and compare the cost-effectiveness numbers with regulations of other sources (electric utilities, municipal and medical waste incinerators). Although comparison between rules for different sources is not directly relevant (see, *e.g.*, *Portland Cement Association* v. *Ruckelshaus* 486 F.2d 375, 389 (D.C. Cir. 1973)), we nevertheless agree that the cost of a mercury beyond-the-floor standard in relation to benefits is substantial. Some commenters, as well as the peer review panel, state that beyond-the-floor levels are not supported by a need based on risk. Although the issue of residual risk can be deferred under the CAA, an immediate question must be addressed if RCRA regulation of air emissions is to be deferred. Our analysis[91] indicates that mercury emissions at the floor level do not pose a serious threat to the human health and environment and that these standards are adequately protective to satisfy RCRA requirements as a matter of national policy, subject, of course, to the possibility of omnibus permit conditions for individual facilities in appropriate cases.

Some commenters state that the technical performance of activated carbon injection for mercury control is not adequately proven. Activated carbon injection performance has been adequately demonstrated at several hazardous waste incinerators, municipal waste combustors, and other devices.[92] Our peer review panel also states that activated carbon injection can achieve 85% reduction of mercury emissions.[93] Some commenters also state that we underestimate the cost and complexities of retrofitting incinerators to install activated carbon injection systems (*e.g.*, air reheaters would be required in many cases). We reevaluated the modifications needed for retrofits of activated carbon injection systems and have revised the costs of installation.

c. What Is the MACT Floor for New Sources? Floor control must be based on the level of control used by the best controlled single source. The best controlled source in our data base uses wet scrubbing and hazardous waste feedrate control of mercury at a feedrate corresponding to a maximum theoretical emission concentration of 0.072 µg/dscm. We conclude that this feedrate is atypically low, however, given that the next lowest mercury feedrates in our data base are 63, 79, 110, and 130 µg/dscm, expressed as maximum theoretical emission concentrations. Accordingly, we select the mercury feedrate for the second best controlled source under the aggregate feedrate approach to represent the floor control mercury feedrate for new sources. That feedrate is 110 µg/dscm[94] expressed as a maximum theoretical emission concentration, and corresponds to an emission level of 45 µg/dscm after considering the expanded MACT pool (*i.e.*, the highest emission level from all sources using floor control). Therefore, we establish a MACT floor level for mercury for new sources of 45 µg/dscm.[95] We note that, at proposal and in

[88] This is coincidentally the same floor level as proposed, notwithstanding the use of a different methodology.

[89] Flue gas temperatures would be limited to 400°F at the point of carbon injection to enhance mercury removal.

[90] USEPA, "Technical Support Document for HWC MACT Standards, Volume V: Emission Estimates and Engineering Costs," July 1999.

[91] USEPA, "Risk Assessment Support to the Development of Technical Standards for Emissions from Combustion Units Burning Hazardous Wastes: Background Information Document," July 1999.

[92] USEPA, "Technical Support Document for HWC MACT Standards, Volume III: Selection of Proposed MACT Standards and Technologies," July 1999.

[93] Memo from Mr. Shiva Garg, EPA to Docket No. F-96-RCSP-FFFFF entitled "Peer Review Panel Report in support of proposed rule for revised standards for hazardous waste combustors", dated August 5, 1996.

[94] The test conditions with mercury feedrates of 63 and 79 µg/dscm do not have complete data sets for all metals and chlorine. Thus, these conditions cannot be used under the aggregate feedrate approach to define the floor level of feedrate control. Mercury emissions from those test conditions are used, however, to identify a floor emission level that is being achieved.

[95] In addition, this floor emission level may be readily achievable for new sources using activated carbon injection as floor control for dioxin/furan without the need for feedrate control of mercury. Activated carbon injection can achieve mercury emissions reductions of 85 percent. Given that the upper bound mercury feedrate for "normal" wastes (*i.e.*, without mercury spiking) in our data base corresponds to a maximum theoretical emission concentration of 300 µg/dscm, such sources could

Continued

the May 1997 NODA, mercury standards of 50 and 40 µg/dscm respectively were proposed for new sources. Today's final rule is in the same range as those proposed emission levels.

d. What Are Our Beyond-the-Floor Considerations for New Sources? We evaluated the use of activated carbon injection as beyond-the-floor control for new sources to achieve emission levels lower than floor levels. In the April 1996 NPRM and May 1997 NODA, we stated that new sources could achieve a beyond-the-floor level of 4 µg/dscm based on use of activated carbon injection. We cited significant cost-effectiveness concerns at that level, however. We reiterate those concerns today.

Many commenters object to our beyond-the-floor standards as proposed, citing high costs for achieving relatively small mercury emission reductions. They compare the proposed standards unfavorably with other sources' regulations (*e.g.*, electric utilities, municipal and medical waste incinerators), where the cost-effectiveness values are much lower. As stated earlier, comparison between rules for different sources is not directly relevant. Nonetheless, we conclude that use of activated carbon injection as a beyond-the-floor control for mercury for new sources would not be cost-effective. We also note that the floor levels are adequately protective to satisfy RCRA requirements.

We also considered additional feedrate control of mercury as beyond-the-floor control. We conclude, however, that significant emission reductions using feedrate control may be problematic because the detection limit of routine feedstream analysis procedures for mercury is such that a beyond-the-floor mercury emission limit could be exceeded even though mercury is not present in feedstreams at detectable levels. Although sources could potentially perform more sophisticated mercury analyses, cost-effectiveness considerations would likely come into play and suggest that a beyond-the-floor standard is not warranted.

4. What Are the Standards for Particulate Matter?

We establish standards for existing and new incinerators which limit particulate matter emissions to 0.015 grains/dry standard cubic foot (gr/dscf) or 34 milligrams per dry standard cubic meter (mg/dscm).[96] We chose the particulate matter standard as a surrogate control for the metals antimony, cobalt, manganese, nickel, and selenium. We refer to these five metals as "nonenumerated metals" because standards specific to each metal have not been established. We discuss below the rationale for adopting these standards.

a. What Is the MACT Floor for Existing Sources? Our data base consists of particulate matter emissions from 75 hazardous waste incinerators that range from 0.0002 gr/dscf to 1.9 gr/dscf. Particle size distribution greatly affects the uncontrolled particulate matter emissions from hazardous waste incinerators, which, in turn, is affected by incinerator type and design, particulate matter entrainment rates, waste ash content, waste sooting potential and waste chlorine content. Final emissions from the stacks of hazardous waste incinerators are affected by the degree of control provided to uncontrolled particulate matter emissions by the air pollution control devices. Dry collection devices include fabric filters or electrostatic precipitators, while wet collection devices include conventional wet scrubbers (venturi type) or the newer patented scrubbers like hydrosonic, free jet, or the collision type. Newer hazardous waste incinerators now commonly use ionizing wet scrubbers or wet electrostatic precipitators or a combination of both dry and wet devices.

The MACT floor setting procedure involves defining MACT level of control based on air pollution control devices used by the best performing sources. Control devices used by these best performing sources can be expected to routinely and consistently achieve superior performance. Then, we identify an emissions level that well designed, well-operated and well-maintained MACT controls can achieve based on demonstrated performance, and engineering information and principles.

The average of the best performing 12 percent of hazardous waste incinerators use either fabric filters, electrostatic precipitators (dry or wet), or ionizing wet scrubbers (sometimes in combination with venturi, packed bed, or spray tower scrubbers). As explained in Part Four, Section V, we define floor control for particulate matter for incinerators as the use of a well-designed, operated, and maintained fabric filter, electrostatic precipitator, or ionizing wet scrubber. Sources using certain wet scrubbing techniques such as high energy venturi scrubbers, and novel condensation, free-jet, and collision scrubbers can also have very low particulate matter emission levels. We do not consider these devices to be MACT control, however, because, in general, a fabric filter, electrostatic precipitator, or ionizing wet scrubber will provide superior particulate matter control. In some cases, sources using medium or low energy wet scrubbers are achieving very low particulate matter emissions, but only for liquid waste incinerators, which typically have low ash content waste. Thus, this control technology demonstrates high effectiveness only under atypical conditions, and we do not consider it to be MACT floor control for particulate matter.

We conclude that fabric filters, electrostatic precipitators, and ionizing wet scrubbers are routinely achieving an emission level of 0.015 gr/dscf based upon the following considerations:

i. Sources in our data base are achieving this emission level. Over 75 percent of the sources in the expanded MACT pool are achieving an emission level of 0.015 gr/dscf. We investigated several sources in our data base using floor control but failing to achieve this level, and we found that the control devices do not appear to be well-designed, operated, and maintained. Some of these sources are not using superior fabric filter bags (*e.g.*, Gore-tex®, Nomex felt, or tri-lift fabrics), some exhibit salt carry-over and entrainment from a poorly operated wet scrubber located downstream of the fabric filter, and some are poorly maintained in critical aspects (such as fabric cleaning cycle or bag replacements).[97]

ii. Well-designed, operated, and maintained fabric filters and electrostatic precipitators can routinely achieve particulate matter levels lower than the floor level of 0.015 gr/dscf. Levels less than 0.005 gr/dscf were demonstrated on hazardous waste incinerators and municipal waste combustors in many cases. Well-designed fabric filters have a surface collection area of over 0.5 ft^2/acfm and high performance filter fabrics such as Nomex and Gore-tex. Well-designed electrostatic precipitators have advanced power system controls (with intermittent or pulse energization), internal plate and electrode geometry to

achieve the mercury floor emission level of 45 µg/dscm using activated carbon injection alone.

[96] Particulate matter is a surrogate for the metal hazardous air pollutants for which we are not establishing metal emission standards: Antimony, cobalt, manganese, nickel, and selenium.

[97] USEPA, "Technical Support Document for HWC, MACT Standards, Volume III: Selection of MACT Standards and Technologies," July 1999.

allow for high voltage potential, flue gas conditioning by addition of water or reagents such as sulfur trioxide or ammonia to condition particulate matter for lower resistivity, and optimized gas distribution within the electrostatic precipitator. The technical support document identifies many hazardous waste incinerators using such well designed control equipment.

iii. The 0.015 gr/dscf level is well within the accepted capabilities of today's particulate matter control devices in the market place. Vendors typically guarantee emission levels for the particulate matter floor control devices at less than 0.015 gr/dscf and in some cases, as low as 0.005 gr/dscf.

iv. The 0.015 gr/dscf level is consistent with standards promulgated for other incinerator source categories burning municipal solid waste and medical waste, both of which are based on performance of fabric filters or electrostatic precipitators as MACT. Comparison of hazardous waste incinerator floor level to these standards is appropriate because particulate matter characteristics such as particle size distribution, loading and particulate matter type are comparable within the above three types of waste burning source categories.

v. Hazardous waste incinerators that meet the 0.015 gr/dscf particulate matter level also generally achieve semivolatile metal system removal efficiencies of over 99% and low volatile metal system removal efficiencies over 99.9%. This indicates superior particulate matter collection efficiency because these metals are controlled by controlling fine and medium-sized particulate matter.

vi. Over 50 percent of all test conditions in the data base, regardless of the type of air pollution control device used, design of the hazardous waste incinerator, or the type of waste burned, currently meet the 0.015 gr/dscf level. This includes hazardous waste incinerators with high particulate matter entrainment rates (such as fluidized bed and rotary kilns) as well as those with wastes that generate difficult to capture fine particulate matter, such as certain liquid injection facilities.

vii. Many incinerators conducted several tests to develop the most flexible operating envelope for day-to-day operations, keeping in view the existing RCRA particulate matter standard of 0.08 gr/dscf. In many test conditions, they elected to meet (and be limited to) the 0.015 gr/dscf level, although they were only required to meet a 0.08 gr/dscf standard.

Many commenters object to the use of engineering information and principles in the selection of the MACT floor level. Some consider engineering information and principles highly subjective and dependent on reviewers' interpretation of the data, while others suggest the use of accepted statistical methods for handling the data. We performed analyses based on available statistical tools for outlier analysis and variability, as discussed previously, but conclude that those approaches are not appropriate. We continue to believe that the use of engineering information and principles is a valid approach to establish the MACT floor (*i.e.*, to determine the level of performance consistently achievable by properly designed and operated floor control technology).

Some commenters object to the use of "well-designed, operated and maintained" MACT controls. They consider the term too vague and want specific parameters and features (*e.g.*, air to cloth ratio for fabric filters and power input for electrostatic precipitators) identified. We understand commenters' concerns but such information is simply not readily available. Further, many parameters work in relation with several others making it problematic to quantify optimum values separate from the other values. The system as a whole needs to be optimized for best control efficiency on a case-by-case basis.

Some commenters object to our justification of particulate matter achievability on the basis of vendors' claims. They contend that: (1) Vendors' claims lack quality control and are driven by an incentive for sales; (2) vendors' claims are based on normal operating conditions, not on trial burn type conditions; and (3) MACT floor should not be based on theoretical performance of state-of-the-art technology. We would agree with the comments if the vendor information were from advertising literature, but instead, our analysis was based on warranties. The financial consequences of vendors' warranties require those warranties to be conservative and based on proven performance records, both during normal operations and during trial burn conditions. In any case, we are using vendor information as corroboration, not to establish a level of performance.

In the May 1997 NODA (62 FR at 24222), we requested comments on the alternative MACT evaluation method based on defining medium and low energy venturi-scrubbers burning low ash wastes as an additional MACT control, but screening out facilities from the expanded MACT floor universe that have poor semivolatile metal system removal efficiency. The resulting MACT floor emission level under this approach would be 0.029 gr/dscf. Many commenters agree with the Agency that this technique is unacceptable because it ignores a majority (over 75 percent) of the available particulate matter data in identifying the MACT standard. This result is driven by the fact that corresponding semivolatile metal data are not available from those sources. Other commenters, however, suggest that venturi scrubbers should be designated as MACT particulate matter control. These commenters suggest that sources using venturi scrubbers are within the average of the best performing 12 percent of sources, and there is no technical basis for their exclusion. As stated above, we agree that well-designed and operated venturi scrubbers can achieve the MACT floor level of 0.015gr/dscf under some conditions (as when burning low ash wastes), but their performance is generally not comparable to that of a fabric filter, electrostatic precipitator, or ionizing wet scrubber. Thus, we conclude that sources equipped with venturi scrubbers may not be able to achieve the floor emission level in all cases, and the floor level would have to be inappropriately increased to accommodate unrestricted use of those units.

Some commenters state that we must demonstrate health or environmental benefits if the rule were to require sources to replace existing, less efficient air pollution control devices (*e.g.*, venturi scrubbers incapable of meeting the standard) with a better performing device, particularly because particulate matter is not a hazardous air pollutant under the CAA. These comments are not persuasive and are misplaced as a matter of law. The MACT floor process was established precisely to obviate such issues and to establish a minimum level of control based on performance of superior air pollution control technologies. Indeed, the chief motivation for adopting the technology-based standards to control emissions of hazardous air pollutants in the first instance was the evident failure of the very type of risk-based approach to controlling air toxics as is suggested by the commenters. (See, *e.g.*, H. Rep. No. 490, 101st Cong. 2d Sess., at 318–19.) Inherent in technology-based standard setting, of course, is the possibility that some technologies will have to be replaced if they cannot achieve the same level of performance as the best performing technologies. Finally, with regard to the commenters' points regarding particulate matter not being a hazardous air pollutant, we explain

above why particulate matter is a valid surrogate for certain hazardous air pollutants, and can be used as a means of controlling hazardous air pollutant emissions. In addition, the legislative history appears to contemplate regulation of particulate matter as part of the MACT process. (See S. Rep. No. 228, 101st Cong. 1st Sess., at 170.[98])

We do not consider cost in selecting MACT floor levels. Nevertheless, for purposes of administrative compliance with the Regulatory Flexibility Act and various Executive Orders, we estimate the cost burden on the hazardous waste incinerator universe to achieve compliance. Approximately 38 percent of hazardous waste incinerators currently meet the floor level of 0.015 gr/dscf. The annualized cost for the remaining 115 incinerators to meet the floor level, assuming no market exits, is estimated to be $17.4 million. Nonenumerated metals and particulate matter emissions will be reduced nationally by 5.1 Mg/yr and 1345 Mg/yr, respectively, or over 50 percent from current baseline emissions.

b. What Are Our Beyond-the-Floor Considerations for Existing Sources? In the NPRM, we proposed a beyond-the-floor emission level of 69 mg/dscm (0.030 gr/dscf) and solicited comment on an alternative beyond-the-floor emission level of 34 mg/dscm (0.015 gr/dscf) based on improved particulate matter control. (61 FR at 17383.) In the May 1997 NODA, we concluded that a beyond-the-floor standard may not be warranted due to significant cost-effectiveness considerations. (62 FR at 24222.)

In the final rule, we considered more stringent beyond-the-floor controls that would provide additional reductions of particulate matter emissions using fabric filters, electrostatic precipitators, and wet ionizing scrubbers that are designed, operated, and maintained to have improved collection efficiency. We considered a beyond-the-floor level of 16 mg/dscm (0.007 gr/dscf), approximately one-half the floor emission level, for existing incinerators based on improved particulate matter control. We then determined the cost of achieving this reduction in particulate matter, with corresponding reductions in the nonenumerated metals for which particulate matter is a surrogate, to determine if this beyond-the-floor level would be appropriate. The national incremental annualized compliance cost for incinerators to meet this beyond-the-floor level, rather than comply with the floor controls, would be approximately $6.8 million for the entire hazardous waste incinerator industry and would provide an incremental reduction in nonenumerated metals emissions nationally beyond the MACT floor controls of 1.7 Mg/yr. Based on these costs of approximately $4.1 million per additional Mg of nonenumerated metals emissions removed, we conclude that this beyond-the-floor option for incinerators is not acceptably cost-effective nor otherwise justified. Therefore, we do not adopt this beyond-the-floor standard. Poor cost-effectiveness would be particularly unacceptable here considering that these metals also have relatively low toxicity. Thus, the particulate matter standard for new incinerators is 34 mg/dscm. Therefore, the cost-effectiveness threshold we would select would be less than for more toxic pollutants such as dioxin, mercury or other metals.

c. What Is the MACT Floor for New Sources? We proposed a floor level of 0.030 gr/dscf for new sources based on the best performing source in the data base, which used a fabric filter with an air-to-cloth ratio of 3.8 acfm/ft^2. In the May 1997 NODA, we reevaluated the particulate matter floor level and indicated that floor control for existing sources would also appear to be appropriate for new sources. We are finalizing the approach discussed in the May 1997 NODA whereby floor control is a well-designed, operated, and maintained fabric filter, electrostatic precipitator, or ionizing wet scrubber, and the floor emission level is 0.015 gr/dscf.

d. What Are Our Beyond-the-Floor Considerations for New Sources? We considered more stringent beyond-the-floor controls that would provide additional reductions of particulate matter emissions using fabric filters, electrostatic precipitators, and wet ionizing scrubbers that are designed, operated, and maintained to have improved collection efficiency. We considered a beyond-the-floor level of 16 mg/dscm (0.007 gr/dscf), approximately one-half the emissions level for existing sources, for new incinerators based on improved particulate matter control. For analysis purposes, improved particulate matter control assumes the use of higher quality fabric filter bag material. We then determined the cost of achieving this reduction in particulate matter, with corresponding reductions in the nonenumerated metals for which particulate matter is a surrogate, to determine if this beyond-the-floor level would be appropriate. The incremental annualized compliance cost for one new large incinerator to meet this beyond-the-floor level, rather than comply with floor controls, would be approximately $39,000 and would provide an incremental reduction in nonenumerated metals emissions of approximately 0.05 Mg/yr.[99] For a new small incinerator, the incremental annualized compliance cost would be approximately $7,500 and would provide an incremental reduction in nonenumerated metals emissions of approximately 0.008 Mg/yr. Based on these costs of approximately $0.8–1.0 million per additional Mg of nonenumerated metals removed, we conclude that a beyond-the-floor standard of 16 mg/dscm is not warranted due to the high cost of compliance and relatively small nonenumerated metals emission reductions. Poor cost-effectiveness would be particularly unacceptable here considering that these metals also have relatively low toxicity. Thus, the particulate matter standard for new incinerators is 34 mg/dscm.

5. What Are the Standards for Semivolatile Metals?

Semivolatile metals are comprised of lead and cadmium. We establish standards which limit semivolatile metal emissions to 240 µg/dscm for existing sources and 24 µg/dscm for new sources. We discuss below the rationale for adopting these standards.

a. What Is the MACT Floor for Existing Sources? As discussed in Part Four, Section V of the preamble, floor control for semivolatile metals is hazardous waste feedrate control of semivolatile metals plus MACT floor particulate matter control. We use the aggregate feedrate approach to define the level of semivolatile metal feedrate control. We have aggregate feedrate data for 20 test conditions from nine hazardous waste incinerators that are using MACT floor control for particulate matter. The semivolatile metal feedrate levels, expressed as maximum theoretical emission concentrations, for these sources range from 100 µg/dscm to 1.5 g/dscm while the semivolatile emissions range from 1 to 6,000 µg/dscm. The MACT-defining maximum theoretical emission concentration is

[98] Control of particulate matter also helps assure that the standards are sufficiently protective to make RCRA regulation of these sources' air emissions unnecessary (except potentially on a site-specific basis through the omnibus permitting process). See Technical Support Document on Risk Assessment.

[99] Based on the data available, the average emissions in sum of the five nonenumerated metals from incinerators using MACT particulate matter control is approximately 229 µg/dscm. To estimate emission reductions of the nonenumerated metals for specific test conditions, we assume a linear relationship between a reduction in particulate matter and these metals.

5,300 µg/dscm. Upon expanding the MACT pool, only the highest emissions test condition of 6,000 µg/dscm was screened out because the semivolatile metal maximum theoretical emission concentration for this test condition was higher than the MACT-defining maximum theoretical emission concentration. The highest emission test condition in the remaining expanded MACT pool identifies a MACT floor emission level of 240 µg/dscm.

We originally proposed a semivolatile metal floor standard of 270 µg/dscm based on semivolatile metal feedrate control. We subsequently refined the emissions data base and reevaluated the floor methodology, and discussed in the May 1997 NODA a semivolatile metal floor level of 100 µg/dscm. Commenters express serious concerns with the May 1997 NODA approach in two areas. First, they note that the MACT-defining best performing sources have very low emissions, not entirely due to the performance of MACT control, but also due to atypically low semivolatile metal feedrates. Second, they object to our use of a "breakpoint" analysis to screen out the outliers from the expanded MACT pool (which was already small due to the screening process to define the feedrate level representative of MACT control). Our final methodology makes adjustments to address these concerns. Under the aggregate feedrate approach, sources with atypically low feedrates of semivolatile metals would not necessarily drive the floor control feedrate level. This is because the aggregate feedrate approach identifies as the best performing sources (relative to feedrate control) those with low feedrates in the aggregate for all metals and chlorine. In addition, the floor methodology no longer uses the breakpoint approach to identify sources not using floor control. These issues are discussed above in detail in Part Four, Section V, of the preamble.

Although cost-effectiveness of floor emission levels is not a factor in defining floor control or emission levels, we have estimated compliance costs and emissions reductions at the floor for administrative purposes. Approximately 66 percent of sources currently meet the semivolatile metal floor level of 240 µg/dscm. The annualized cost for the remaining 64 incinerators to meet the floor level, assuming no market exits, is estimated to be $1.8 million. Semivolatile metal emissions will be reduced nationally by 55.9 Mg per year from the baseline emissions level of 58.5 Mg per year, a reduction of 95.5%.

b. What Are Our Beyond-the-Floor Considerations for Existing Sources? We considered more stringent semivolatile metal feedrate control as a beyond-the-floor control to provide additional reductions in emissions. Cost effectiveness considerations would likely come into play, however, and suggest that a beyond-the-floor standard is not warranted. Therefore, we conclude that a beyond-the-floor standard for semivolatile metals for existing sources is not appropriate. We note that a beyond-the-floor standard is not needed to meet our RCRA protectiveness mandate.

c. What Is the MACT Floor for New Sources? Floor control for new sources is: (1) The level of semivolatile metal feedrate control used by the source with the lowest aggregate feedrate for all metals and chlorine;[100] and (2) use of MACT floor particulate matter control for new sources (*i.e.*, a fabric filter, electrostatic precipitator, or wet ionizing scrubber achieving a particulate matter emission level of 0.015 gr/dscf). Three sources in our data base are currently using the floor control selected for all new sources and are achieving semivolatile emissions ranging from 2 µg/dscm to 24 µg/dscm. To ensure that the floor level is achievable by all sources using floor control, we are establishing the floor level for semivolatile metals for new sources at 24 µg/dscm.

d. What Are Our Beyond-the-Floor Considerations for New Sources? We considered more stringent beyond-the-floor controls (*i.e.*, a more restrictive semivolatile metal feedrate) to provide additional reduction in emissions. We determined that cost-effectiveness considerations would likely be unacceptable due to the relatively low concentrations achieved at the floor. This suggests that a beyond-the-floor standard is not warranted. We note that a beyond-the-floor standard is not needed to meet our RCRA protectiveness mandate.

6. What Are the Standards for Low Volatile Metals?

Low volatile metals are comprised of arsenic, beryllium, and total chromium. We establish standards that limit emissions of these metals to 97 µg/dscm for both existing and new incinerators. We discuss below the rationale for adopting these standards.

a. What Is the MACT Floor for Existing Sources? We are using the same approach for low volatile metals as we did for semivolatile metals to define floor control. Floor control for low volatile metals is use of particulate matter floor control and control of the feedrate of low volatile metals to a level identified by the aggregate feedrate approach.

The low volatile metal feedrates for sources using particulate matter floor control range from 300 µg/dscm to 1.4 g/dscm when expressed as maximum theoretical emission concentrations. Emission levels for these sources range from 1 to 803 µg/dscm. Approximately 60 percent of sources using particulate matter floor control have low volatile metal feedrates below the MACT floor feedrate—24,000 µg/dscm, expressed as a maximum theoretical emission concentration.

Upon expanding the MACT pool, the source using floor control with the highest emissions is achieving an emission level of 97 µg/dscm. Accordingly, we are establishing the floor level for low volatile metals for existing sources at 97 µg/dscm to ensure that the floor level is achievable by all sources using floor control.

We identified a low volatile metal floor level of 210 µg/dscm in the April 1996 proposal. The refined data analysis in the May 1997 NODA, based on the revised data base, reduced the low volatile metal floor level to 55 µg/dscm. As with semivolatile metals, commenters express serious concerns with the May 1997 NODA approach, including selection of the breakpoint "outlier" screening approach and use of hazardous waste incinerator data with atypically low feedrates for low volatile metals. We acknowledge those concerns and adjusted our methodology accordingly. See discussions above in Part Four, Section V.

We estimated compliance costs to the hazardous waste incinerator universe for administrative purposes. Approximately 63 percent of incinerators currently meet the 97 µg/dscm floor level. The annualized cost for the remaining 69 incinerators to meet the floor level, assuming no market exits, is estimated to be $1.9 million, and would reduce low volatile metal emissions nationally by 6.9 Mg per year from the baseline emissions level of 8 Mg per year.

b. What Are Our Beyond-the-Floor Considerations for Existing Sources? We considered more stringent beyond-the-floor controls (*i.e.*, a more restrictive low volatile metal feedrate) to provide additional reduction in emissions. Due to the relatively low concentrations achieved at the floor, we determined that cost-effectiveness considerations would likely be unacceptable. Therefore, we conclude that a beyond-the-floor standard for low volatile metals for existing sources is not

[100] *i.e.*, a semivolatile metal feedrate equivalent to a maximum theoretical emission concentration of 3,500 µg/dscm.

appropriate. We note that a beyond-the-floor standard is not needed to meet our RCRA protectiveness mandate.

c. What Is the MACT Floor for New Sources? We identified a floor level of 260 μg/dscm for new sources at proposal based on the best performing source in the data base. That source uses a venturi scrubber with a low volatile metal feedrate equivalent to a maximum theoretical emission concentration of 1,000 μg/dscm. Our reevaluation of the data base in the May 1997 NODA identified a floor level of 55 μg/dscm based on use of floor control for particulate matter and feedrate control of low volatile metals. Other than the comments on the two issues of low feedrate and the inappropriate use of a breakpoint analysis discussed above, no other significant comments challenged this floor level.

Floor control for new sources is the same as discussed in the May 1997 NODA (*i.e.*, use of particulate matter floor control and feedrate control of low volatile metals), except the floor feedrate level under the aggregate feedrate approach used for today's final rule is 13,000 μg/dscm. Upon expanding the MACT pool, the source using floor control with the highest emissions is achieving an emission level of 97 μg/dscm.[101] Accordingly, we are establishing the floor level for low volatile metals for new sources at 97 μg/dscm to ensure that the floor level is achievable by all sources using floor control.

d. What Are Our Beyond-the-Floor Considerations for New Sources? We considered more stringent beyond-the-floor controls (*i.e.*, a more restrictive low volatile metal feedrate) to provide additional reduction in emissions. Because of the relatively low concentrations achieved, we determined that cost-effectiveness considerations would likely be unacceptable. Therefore, we conclude that a beyond-the-floor standard for low volatile metals for new sources is not appropriate. We note that a beyond-the-floor standard is not needed to meet our RCRA protectiveness mandate.

[101] The emission level for new sources achieving a feedrate control of 13,000 μg/dscm (expressed as a maximum theoretical emission concentration) is the same as the emission level for existing sources achieving a feedrate control of 24,000 μg/dscm because sources feeding low volatile metals in the range of 13,000 to 24,000 μg/dscm have emission levels at or below 97 μg/dscm. Although these sources feed low volatile metals at higher levels than the single best feedrate-controlled source, their emission control devices apparently are more efficient. Thus, they achieved lower emissions than the single best feedrate-controlled source.

7. What Are the Standards for Hydrochloric Acid and Chlorine Gas?

We establish standards for hydrochloric acid and chlorine gas, combined, for existing and new incinerators of 77 and 21 ppmv respectively. We discuss below the rationale for adopting these standards.

a. What Is the MACT Floor for Existing Sources? Almost all hazardous waste incinerators currently use some type of add-on stack gas wet scrubbing system, in combination with control of the feedrate of chlorine, to control emissions of hydrochloric acid and chlorine gas. A few sources use dry or semi-dry scrubbing, alone or in combination with wet scrubbing, while a few rely upon feedrate control only. Wet scrubbing consistently provides a system removal efficiency of over 99 percent for various scrubber types and configurations. Current RCRA regulations require 99% removal efficiency and most sources are achieving greater than 99.9 percent removal efficiency. Accordingly, floor control is defined as wet scrubbing achieving a system removal efficiency of 99 percent or greater combined with feedrate control of chlorine.

The floor feedrate control level for chlorine is 22 μg/dscm, expressed as a maximum theoretical emission concentration, based on the aggregate feedrate approach. The source in the expanded MACT pool (*i.e.*, all sources using floor control) with the highest emission levels of hydrogen chloride and chlorine gas is achieving an emission level of 77 ppmv. Thus, MACT floor for existing sources is 77 ppmv.

At proposal, we also defined floor control as wet scrubbing combined with feedrate control of chlorine. We proposed a floor emission level of 280 ppmv based on a chlorine feedrate control level of 21 μg/dscm, expressed as a maximum theoretical emission concentration. The best performing sources relative to emission levels all use wet scrubbing and feed chlorine at that feedrate or lower. We identified a floor level of 280 ppmv based on all sources in our data base using floor control and after applying a statistically-derived emissions variability factor. In the May 1997 NODA, we again defined floor control as wet (or dry) scrubbing with feedrate control of chlorine. We discussed a floor emission level of 75 ppmv based on the revised data base and break-point floor methodology. Rather than using a break-point analysis in the final rule, we use a floor methodology that identifies floor control as an aggregate chlorine feedrate combined with scrubbing that achieves a removal efficiency of at least 99 percent.

We estimated compliance costs to the hazardous waste incinerator universe for administrative purposes. Approximately 70 percent of incinerators currently meet the hydrochloric acid and chlorine gas floor level of 77 ppmv. The annualized cost for the remaining 57 incinerators to meet that level, assuming no market exits, is estimated to be $4.75 million and would reduce emissions of hydrochloric acid and chlorine gas nationally by 2,670 Mg per year from the baseline emissions level of 3410 Mg per year, a reduction of 78%.

b. What Are Our Beyond-the-Floor Considerations for Existing Sources? We considered more stringent beyond-the-floor controls to provide additional reduction in emissions. Due to the relatively low concentrations achieved at the floor, we determined that cost-effectiveness considerations would likely be unacceptable. Therefore, we conclude that a beyond-the-floor standard for hydrochloric acid and chlorine gas for existing sources is not appropriate. We note that a beyond-the-floor standard is not needed to meet our RCRA protectiveness mandate.

c. What Is the MACT Floor for New Sources? We identified a floor level of 280 ppmv at proposal based on the best performing source in the data base. That source uses wet scrubbing and a chlorine feedrate of 17 μg/dscm, expressed as a maximum theoretical emission concentration. Our reevaluation of the revised data base in the May 1997 NODA defined a floor level of 75 ppmv. Based on the aggregate feedrate approach used for today's final rule, we are establishing a floor level of 21 ppmv, based on a chlorine feedrate of 4.7 μg/dscm expressed as a maximum theoretical emission concentration.

d. What Are Our Beyond-the-Floor Considerations for New Sources? We considered more stringent beyond-the-floor controls to provide additional reduction in emissions. Due to the relatively low concentrations achieved at the floor, we determined that cost-effectiveness considerations would likely be unacceptable. Therefore, we conclude that a beyond-the-floor standard for hydrochloric acid and chlorine gas for new sources is not appropriate. We note that a beyond-the-floor standard is not needed to meet our RCRA protectiveness mandate.

8. What Are the Standards for Carbon Monoxide?

We use carbon monoxide as a surrogate for organic hazardous air pollutants. Low carbon monoxide

concentrations in stack gas are an indicator of good control of organic hazardous air pollutants and are achieved by operating under good combustion practices.

We establish carbon monoxide standards of 100 ppmv for both existing and new sources based on the rationale discussed below. Sources have the option to comply with either the carbon monoxide or the hydrocarbon emission standard. Sources that elect to comply with the carbon monoxide standard must also document compliance with the hydrocarbon standard during the performance test to ensure control of organic hazardous air pollutants. See discussion in Part Four, Section IV.B.

a. What Is the MACT Floor for Existing Sources? As proposed, floor control for existing sources is operating under good combustion practices (*e.g.*, providing adequate excess oxygen; providing adequate fuel (waste) and air mixing; maintaining high temperatures and adequate combustion gas residence time at those temperatures).[102] Given that there are many interdependent parameters that affect combustion efficiency and thus carbon monoxide emissions, we were not able to quantify "good combustion practices."

We are identifying a floor level of 100 ppmv on an hourly rolling average, as proposed, because it is being achieved by sources using good combustion practices. More than 80 percent of test conditions in our data base have carbon monoxide levels below 100 ppmv, and more than 60 percent have levels below 20 ppmv. Of approximately 20 test conditions with carbon monoxide levels exceeding 100 ppmv, we know the characteristics of many of these sources are not representative of good combustion practices (*e.g.*, use of rotary kilns without afterburners; liquid injection incinerators with rapid combustion gas quenching). In addition, we currently limit carbon monoxide concentrations for hazardous waste burning boilers and industrial furnaces to 100 ppmv to ensure good combustion conditions and control of organic toxic compounds. Finally, we have established carbon monoxide limits in the range of 50 to 150 ppmv on other waste incineration sources (*i.e.*, municipal waste combustors, medical waste incinerators) to ensure good combustion conditions. We are not aware of reasons why it may be more difficult for a hazardous waste incinerator to achieve carbon monoxide levels of 100 ppmv.

[102] USEPA, "Technical Support Document for HWC MACT Standards, Volume III: Selection of MACT Standards and Technologies," July 1999.

We estimated compliance costs to the hazardous waste incinerator universe for administrative purposes. Because carbon monoxide emissions from these sources are already regulated under RCRA, approximately 97 percent of incinerators currently meet the floor level of 100 ppmv. The annualized cost for the remaining six incinerators to meet the floor level, assuming no market exits, is estimated to be $0.9 million and would reduce carbon monoxide emissions nationally by 45 Mg per year from the baseline emissions level of 9170 Mg per year.[103] Although we cannot quantify a corresponding reduction of organic hazardous air pollutant emissions, we estimate these reductions would be significant based on the carbon monoxide reductions.

b. What Are Our Beyond-the-Floor Considerations for Existing Sources? We considered more stringent beyond-the-floor controls (*i.e.*, better combustion practices resulting in lower carbon monoxide levels) to provide additional reduction in emissions. Although it is difficult to quantify the reduction in emissions of organic hazardous air pollutants that would be associated with a lower carbon monoxide limit, we concluded that cost-effectiveness considerations would likely come into play, and suggest that a beyond-the-floor standard is not warranted. Therefore, we conclude that a beyond-the-floor standard for carbon monoxide for existing sources is not appropriate. We note that, although control of carbon monoxide (or hydrocarbon) is not an absolute guarantee that nondioxin/furan products of incomplete combustion will not be emitted at levels of concern, this problem (where it may exist) can be addressed through the RCRA omnibus permitting process.

c. What Is the MACT Floor for New Sources? At proposal and in the May 1997 NODA, we stated that operating under good combustion practices defines MACT floor control for new (and existing) sources,[104] and the preponderance of data indicate that a floor level of 100 ppmv over an hourly rolling average is readily achievable. For reasons set forth in the proposal, and absent data to the contrary, we conclude that this floor level is appropriate.

[103] As discussed previously in the text, you have the option of complying with the hydrocarbon emission standard rather than the carbon monoxide standard. This is because carbon monoxide is a conservative indicator of the potential for emissions of organic compounds while hydrocarbon concentrations in stack gas are a direct measure of emissions of organic compounds.

[104] Because we cannot quantify good combustion practices, floor control for the single best controlled source is the same as for existing sources (*i.e.*, that combination of design, operation, and maintenance that achieves good combustion as evidenced by carbon monoxide levels of 100 ppmv or less on an hourly rolling average).

d. What Are Our Beyond-the-Floor Considerations for New Sources? We considered more stringent beyond-the-floor controls (*i.e.*, better combustion practices resulting in lower carbon monoxide levels) to provide additional reduction in emissions. For the reasons discussed above in the context of beyond-the-floor controls for existing sources, however, we conclude that a beyond-the-floor standard for carbon monoxide for new sources is not appropriate.

9. What Are the Standards for Hydrocarbon?

Hydrocarbon concentrations in stack gas are a direct surrogate for emissions of organic hazardous pollutants. We establish hydrocarbon standards of 10 ppmv for both existing and new sources based on the rationale discussed below. Sources have the option to comply with either the carbon monoxide or the hydrocarbon emission standard. Sources that elect to comply with the carbon monoxide standard, however, must nonetheless document compliance with the hydrocarbon standard during the comprehensive performance test.

a. What Is the MACT Floor for Existing Sources? We proposed a hydrocarbon emission standard of 12 ppmv[105] based on good combustion practices, but revised it in the May 1997 NODA to 10 ppmv based on refinements of analysis and the corrected data base.

As proposed, floor control for existing sources is operating under good combustion practices (*e.g.*, providing adequate excess oxygen; providing adequate fuel (waste) and air mixing; maintaining high temperatures and adequate combustion gas residence time at those temperatures). Given that there are many interdependent parameters that affect combustion efficiency and thus hydrocarbon emissions, we are not able to quantify good combustion practices.

We are identifying a floor level for the final rule of 10 ppmv on an hourly rolling average because it is being achieved using good combustion practices. More than 85 percent of test conditions in our data base have hydrocarbon levels below 10 ppmv, and nearly 75 percent have levels below 5 ppmv. Although 13 test conditions in our data base representing 7 sources have hydrocarbon levels higher than 10 ppmv, we conclude that these sources

[105] Based on an hourly rolling average, reported as propane, corrected to 7 percent oxygen, dry basis.

are not operating under good combustion practices. For example, one source is a rotary kiln without an afterburner. Another source is a fluidized bed type incinerator that operates at lower than typical combustion temperatures without an afterburner while another source is operating at high carbon monoxide levels, indicative of poor combustion efficiency.[106]

Some commenters on the May 1997 NODA object to the 10 ppmv level and suggest adopting a level of 20 ppmv based on the BIF rule (§ 266.104(c)), and an earlier hazardous waste incinerator proposal (55 FR 17862 (April 27, 1990)). These commenters cite sufficient protectiveness at the 20 ppmv level. We conclude that this comment is not on point because the MACT standards are technology rather than risk-based. The MACT standards must reflect the level of control that is not less stringent than the level of control achieved by the best performing sources. Because hazardous waste incinerators are readily achieving a hydrocarbon level of 10 ppmv using good combustion practices, that floor level is appropriate.

Some commenters also object to the requirement to use heated flame ionization hydrocarbon detectors[107] in hazardous waste incinerators that use wet scrubbers. The commenters state that these sources have a very high moisture content in the flue gas that hinders proper functioning of the specified hydrocarbon detectors. We agree that hydrocarbon monitors may be hindered in these situations. For this and other reasons (*e.g.*, some sources can have high carbon monoxide but low hydrocarbon levels), the final rule gives sources the option of: (1) Continuous hydrocarbon monitoring; or (2) continuous carbon monoxide monitoring and demonstration of compliance with the hydrocarbon standard only during the performance test.

We estimated compliance costs to the hazardous waste incinerator universe for administrative purposes. Approximately 97 percent of incinerators currently meet the hydrocarbon floor level of 10 ppmv. The annualized cost for the remaining six incinerators to meet the floor level, assuming no market exits, is estimated to be $0.35 million, and would reduce hydrocarbon emissions nationally by 28 Mg per year from the baseline emissions level of 292 Mg per year. Although the corresponding reduction of organic hazardous air pollutant emissions cannot be quantified, these reductions are qualitatively assessed as significant.

b. What Are Our Beyond-the-Floor Considerations for Existing Sources? We considered more stringent beyond-the-floor controls (*i.e.*, better combustion practices resulting in lower hydrocarbon levels) to provide additional reduction in emissions. Although it is difficult to quantify the reduction in emissions of organic hazardous air pollutants that would be associated with a lower hydrocarbon limit, cost-effectiveness considerations would likely come into play, however, and suggest that a beyond-the-floor standard is not warranted. Therefore, we conclude that a beyond-the-floor standard for hydrocarbon emissions for existing sources is not appropriate. We note further that, although control of hydrocarbon emissions is not an absolute guarantee that nondioxin products of incomplete combustion will not be emitted at levels of concern, this problem (where it may exist) can be addressed through the RCRA omnibus permitting process.

c. What Is the MACT Floor for New Sources? At proposal and in the May 1997 NODA, we stated that operation under good combustion practices at new (and existing) hazardous waste incinerators defines the MACT control.[108] As discussed above, sources using good combustion practices are achieving hydrocarbon levels of 10 ppmv or below. Comments on this subject were minor and did not identify any problems in achieving the 10 ppmv level by new sources. Thus, we conclude that a floor level of 10 ppmv on hourly rolling average is appropriate for new sources.

d. What Are Beyond-the-Floor Considerations for New Sources? We considered more stringent beyond-the-floor controls (*i.e.*, better combustion practices) to provide additional reduction in emissions. For the reasons discussed above in the context of beyond-the-floor controls for existing sources, however, we conclude that a beyond-the-floor standard for hydrocarbons for new sources is not appropriate.

10. What Are the Standards for Destruction and Removal Efficiency?

We establish a destruction and removal efficiency (DRE) standard for existing and new incinerators to control emissions of organic hazardous air pollutants other than dioxins and furans. Dioxins and furans are controlled by separate emission standards. See discussion in Part Four, Section IV.A. The DRE standard is necessary, as previously discussed, to complement the carbon monoxide and hydrocarbon emission standards, which also control these hazardous air pollutants.

The standard requires 99.99 percent DRE for each principal organic hazardous constituent (POHC), except that 99.9999 percent DRE is required if specified dioxin-listed hazardous wastes are burned. These wastes are listed as—F020, F021, F022, F023, F026, and F027—RCRA hazardous wastes under Part 261 because they contain high concentrations of dioxins.

a. What Is the MACT Floor for Existing Sources? Existing sources are currently subject to DRE standards under § 264.342 and § 264.343(a) that require 99.99 percent DRE for each POHC, except that 99.9999 percent DRE is required if specified dioxin-listed hazardous wastes are burned. Accordingly, these standards represent MACT floor. Since all hazardous waste incinerators are currently subject to these DRE standards, they represent floor control, *i.e.*, greater than 12 percent of existing sources are achieving these controls.

b. What Are Our Beyond-the-Floor Considerations for Existing Sources? Beyond-the-floor control would be a requirement to achieve a higher percentage DRE, for example, 99.9999 percent DRE for POHCs for all hazardous wastes. A higher DRE could be achieved by improving the design, operation, or maintenance of the combustion system to achieve greater combustion efficiency.

Sources will not incur costs to achieve the 99.99 percent DRE floor because it is an existing RCRA standard. A substantial number of existing incinerators are not likely to be routinely achieving 99.999 percent DRE, however, and most are not likely to be achieving 99.9999 percent DRE. Improvements in combustion efficiency will be required to meet these beyond-the-floor DREs. Improved combustion efficiency is accomplished through better mixing, higher temperatures, and longer residence times. As a practical matter, most combustors are mixing-limited. Thus, improved mixing is

[106] USEPA, "Technical Support Document for HWC MACT Standards, Volume III: Selection of MACT Standards and Technologies," July 1999.

[107] See Performance Specification 8A, appendix B, part 60, "Specifications and test procedures for carbon monoxide and oxygen continuous monitoring systems in stationary sources."

[108] Because we cannot quantify good combustion practices, floor control for the single best controlled soruce is the same as for existing sources (*i.e.*, that combination of design, operation, and maintenance that achieves good combustion as evidenced by hydrocarbon levels of 10 ppmv or less on an hourly rolling average).

necessary for improved DREs. For a less-than-optimum burner, a certain amount of improvement may typically be accomplished by minor, relatively inexpensive combustor modifications—burner tuning operations such as a change in burner angle or an adjustment of swirl—to enhance mixing on the macro-scale. To achieve higher and higher DREs, however, improved mixing on the micro-scale may be necessary requiring significant, energy intensive and expensive modifications such as burner redesign and higher combustion air pressures. In addition, measurement of such DREs may require increased spiking of POHCs and more sensitive stack sampling and analysis methods at added expense.

Although we have not quantified the cost-effectiveness of a beyond-the-floor DRE standard, we do not believe that it would be cost-effective. For reasons discussed above, we believe that the cost of achieving each successive order-of-magnitude improvement in DRE will be at least constant, and more likely increasing. Emissions reductions diminish substantially, however, with each order of magnitude improvement in DRE. For example, if a source were to emit 100 gm/hr of organic hazardous air pollutants assuming zero DRE, it would emit 10 gm/hr at 90 percent DRE, 1 gm/hr at 99 percent DRE, 0.1 gm/hr at 99.9 percent DRE, 0.01 gm/hr at 99.99 percent DRE, and 0.001 gm/hr at 99.999 percent DRE. If the cost to achieve each order of magnitude improvement in DRE is roughly constant, the cost-effectiveness of DRE decreases with each order of magnitude improvement in DRE. Consequently, we conclude that this relationship between compliance cost and diminished emissions reductions associated with a more stringent DRE standard suggests that a beyond-the-floor standard is not warranted.

c. What Is the MACT Floor for New Sources? The single best controlled source, and all other hazardous waste incinerators, are subject to the existing RCRA DRE standard under § 264.342 and § 264.343(a). Accordingly, we adopt this standard as the MACT floor for new sources.

d. What Are Our Beyond-the-Floor Considerations for New Sources? As discussed above, although we have not quantified the cost-effectiveness of a more stringent DRE standard, diminishing emissions reductions with each order of magnitude improvement in DRE suggests that cost-effectiveness considerations would likely come into play. We conclude that a beyond-the-floor standard is not warranted.

VII. What Are the Standards for Hazardous Waste Burning Cement Kilns?

A. To Which Cement Kilns Do Today's Standards Apply?

The standards promulgated today apply to each existing, reconstructed, and newly constructed Portland cement manufacturing kiln that burns hazardous waste. These standards apply to all hazardous waste burning cement kilns (both major source and area source cement plants). Portland cement kilns that do not engage in hazardous waste burning operations are not subject to this NESHAP. However, these hazardous waste burning kilns would be subject to the NESHAP for other sources of hazardous air pollutants at the facility (*e.g.*, clinker cooler stack) that we finalized in June 1999.[109]

B. How Did EPA Initially Classify Cement Kilns?

1. What Is the Basis for a Separate Class Based on Hazardous Waste Burning?

Portland cement manufacturing is one of the initial 174 categories of major and area sources of hazardous air pollutants listed pursuant to section 112(c)(1) for which section 112(d) standards are to be established.[110] We divided the Portland cement manufacturing source category into two different classes based on whether the cement kiln combusts hazardous waste. This action was taken for two principal reasons: If hazardous wastes are burned in the kiln, emissions of hazardous air pollutants can be different for the two types of kilns in terms of both types and concentrations of hazardous air pollutants emitted, and metals and chlorine emissions are controlled in a significantly different manner.

A comparison of metals levels in coal and in hazardous waste fuel burned in lieu of coal on a heat input basis reveals that hazardous waste frequently contains higher concentrations of hazardous air pollutant metals (*i.e.*, mercury, semivolatile metals, low volatile metals) than coal. Hazardous waste contains higher levels of semivolatile metals than coal by more than an order of magnitude at every cement kiln in our data base.[111] In addition, coal concentrations of mercury and low volatile metals were less than hazardous waste by approximately an order of magnitude at every facility except one. Thus, a cement kiln feeding a hazardous waste fuel is likely to emit more metal hazardous air pollutants than a nonhazardous waste burning cement kiln. Given this difference in emissions characteristics, we divided the Portland cement manufacturing source category into two classes based on whether hazardous waste is burned in the cement kiln.

Today's rule does not establish hazardous air pollutant emissions limits for other hazardous air pollutant-emitting sources at a hazardous waste burning cement plant. These other sources of hazardous air pollutants may include materials handling operations, conveyor system transfer points, raw material dryers, and clinker coolers. Emissions from these sources are subject to the requirements promulgated in the June 14, 1999 Portland cement manufacturing NESHAP. See 64 FR 31898. These standards are applicable to these other sources of hazardous air pollutants at all Portland cement plants, both for nonhazardous waste burners and hazardous waste burners.

In addition, this regulation does not establish standards for cement kiln dust management facilities (*e.g.*, cement kiln dust piles or landfills). We are developing cement kiln dust storage and disposal requirements in a separate rulemaking.

2. What Is the Basis for Differences in Standards for Hazardous Waste and Nonhazardous Waste Burning Cement Kilns?

Today's final standards for hazardous waste burning cement kilns are identical in some respects to those finalized for nonhazardous waste burning cement kilns on June 14, 1999. The standards differ, however, in several important aspects. A comparison of the major features of the two sets of standards and the basis for major differences is discussed below.

a. How Does the Regulation of Area Sources Differ? As discussed earlier, this rule makes a positive area source finding under section 112(c)(3) of the CAA (*i.e.*, a finding that hazardous air pollutant emissions from an area source can pose potential risk to human health and the environment) for existing hazardous waste burning cement kilns and subjects area sources to the same standards that apply to major sources. (See Part Three, Section III.B of today's preamble.) For nonhazardous waste burning cement kilns, however, we regulate area sources under authority of

[109] On June 14, 1999, we promulgated regulations for kiln stack emissions for nonhazardous waste burning cement kilns and other sources of hazardous air pollutants at all Portland manufacturing plants. (See 64 FR 31898.)

[110] EPA published an initial list of 174 categories of area and major sources in the **Federal Register** on July 16, 1992. (See 57 FR at 31576.)

[111] USEPA, "Final Technical Support Document for HWC MACT Standards, Volume III: Selection of MACT Standards and Technologies," July 1999.

section 112(c)(6) of the CAA, and so apply MACT standards only to the section 112(c)(6) hazardous air pollutants emitted from such sources.

The positive finding for hazardous waste burning cement kilns is based on several factors and, in particular, on concern about potential health risk from emissions of mercury and nondioxin/furan organic hazardous air pollutants which are products of incomplete combustion.

However, we do not have this same level of concern with hazardous air pollutant emissions from nonhazardous waste burning cement kilns located at area source cement plants, and so did not make a positive area source finding. As discussed above, mercury emissions from hazardous waste burning cement kilns are generally higher than those from nonhazardous waste burning cement kilns. Also, nondioxin and nonfuran organic hazardous air pollutants emitted from hazardous waste burning cement kilns have the potential to be greater than those from nonhazardous waste burning cement kilns because hazardous waste can contain high concentrations of a wide-variety of organic hazardous air pollutants. In addition, some hazardous waste burning cement kilns feed containers of hazardous waste at locations (*e.g.*, midkiln, raw material end of the kiln) other than the normal coal combustion zone. If such firing systems are poorly designed, operated, or maintained, emissions of nondioxin and furan organic hazardous air pollutants could be substantial (and, again, significantly greater than comparable emissions from nonhazardous waste Portland cement plants). Finally, hazardous air pollutant emissions from nonhazardous waste burning cement kilns currently are not regulated uniformly under another statute as is the case for hazardous waste burning cement kilns which affects which pollutants are controlled at the floor for each class.

Under the June 1999 final rule, existing and new nonhazardous waste burning cement kilns at area source plants are subject to dioxin and furan emission standards, and a hydrocarbon [112] standard for new nonhazardous waste burning cement kilns that are area sources. These standards are promulgated under the authority of section 112(c)(6). That section requires the Agency to establish MACT standards for source categories contributing significantly in the aggregate to emissions of identified, particularly hazardous air pollutants. The MACT process was also applied to the control of mercury, although the result was a standard of no control.

b. How Do the Emission Standards Differ? The dioxin, furan and particulate matter emission standards for nonhazardous waste burning cement kilns are identical to today's final standard for hazardous waste burning cement kilns. The standards for both classes of kilns are floor standards and are identical because hazardous waste burning is not likely to affect emissions of either dioxin/furan [113] or particulate matter. We also conclude that beyond-the-floor standards for these pollutants would not be cost-effective for either class of cement kilns.

Under today's rule, hazardous waste burning cement kilns are subject to emission standards for mercury, semivolatile metals, low volatile metals, and hydrochloric acid/chlorine gas, but we did not finalize such standards for nonhazardous waste burning cement kilns. Currently, emissions of these hazardous air pollutants from hazardous waste burning cement kilns are regulated under RCRA. Therefore, we could establish floor levels for each pollutant under the CAA. These hazardous air pollutants, however, currently are not controlled for nonhazardous waste burning cement kilns and floor levels would be uncontrolled levels (*i.e.*, the highest emissions currently achieved).[114] We considered beyond-the-floor controls and emission standards for mercury and hydrochloric acid for nonhazardous waste burning cement kilns, but conclude that beyond-the-floor standards are not cost-effective, especially considering the lower rates of current emissions for nonhazardous waste burning plants.

Finally, under today's rule, hazardous waste burning cement kilns are subject to emission limits on carbon monoxide and hydrocarbon and a destruction and removal efficiency standard to control nondioxin/furan organic hazardous air pollutants. We identified these controls as floor controls because carbon monoxide and hydrocarbon emissions are controlled for these sources under RCRA regulations, as is destruction and removal efficiency.[115] For nonhazardous waste burning cement kilns, carbon monoxide and hydrocarbon emissions currently are not controlled, and the destruction and removal efficiency standard, established under RCRA, does not apply. Therefore, carbon monoxide, hydrocarbon control and the destruction and removal efficiency standard are not floor controls for this second group of cement kilns. We considered beyond-the-floor controls for hydrocarbon from nonhazardous waste burning cement kilns and determined that beyond-the-floor controls for existing sources are not cost-effective. The basis of this conclusion is discussed in the proposed rule for nonhazardous waste burning cement kilns (see 63 FR at 14202). We proposed and finalized, however, a hydrocarbon emission standard for new source nonhazardous waste cement kilns based on feeding raw materials without an excessive organic content.[116] See 63 FR at 14202 and 64 FR 31898.

We did not consider a destruction and removal efficiency standard as a beyond-the-floor control for nonhazardous waste burning cement kilns because, based historically on a unique RCRA statutory provision, the DRE standard is designed to ensure destruction of organic hazardous air pollutants in hazardous waste fed to hazardous waste combustors. The underlying rationale for such a standard is absent for nonhazardous waste burning cement kilns that do not combust hazardous waste and that feed materials (*e.g.*, limestone, coal) that contain only incidental levels of organic hazardous air pollutants.

c. How Do the Compliance Procedures Differ? We finalized compliance procedures for nonhazardous waste burning cement kilns that are similar to those finalized today for hazardous waste burning cement kilns. For particulate matter, we are implementing a coordinated program to document the feasibility of particulate matter continuous emissions monitoring

[112] Hydrocarbon emissions would be limited as a surrogate for polycyclic organic matter, a category of organic hazardous air pollutants identified in section 112(c)(6).

[113] Later in the text, however, we discuss how hazardous waste burning may potentially affect dioxin and furan emissions and the additional requirements for hazardous waste burning cement kilns that address this concern.

[114] Although semivolatile metal and low volatile metal are controlled by nonhazardous waste burning cement kilns, along with other metallic hazardous air pollutants, by controlling particulate matter. These metals are not individually controlled by nonhazardous waste burning cement kilns as they are for hazardous waste burning cement kilns by virtue of individual metal feedrate limits established under existing RCRA regulations.

[115] For hazardous waste burning cement kilns, existing RCRA carbon monoxide and hydrocarbon standards do not apply to the main stack of a kiln equipped with a by-pass or other means of measuring carbon monoxide or hydrocarbon at mid kiln to ensure good combustion of hazardous waste. Therefore, there is no carbon monoxide or hydrocarbon floor control for such stacks, and we conclude that beyond-the-floor controls would not be cost-effective.

[116] Consistent with the nonhazardous waste burnign cement kiln proposal, however, we subject the main stack of such new source hazardous waste burning cemen tkilns to a hydrocarbon standard.

systems on both nonhazardous waste and hazardous waste burning cement kilns. We plan to establish a continuous emissions monitoring systems-based emission level through future rulemaking that is achievable by sources equipped with MACT control (*i.e.*, an electrostatic precipitator or fabric filter designed, operated, and maintained to meet the New Source Performance Standard particulate matter standard). In the interim, we use the opacity standard as required by the New Source Performance Standard for Portland cement plants under § 60.62 to ensure compliance with the particulate matter standard for both hazardous waste and nonhazardous waste burning cement kilns.

For dioxin/furan, the key compliance parameter will be identical for both hazardous waste and nonhazardous waste burning cement kilns—control of temperature at the inlet to the particulate matter control device. Other factors that could contribute to the formation of dioxins and furans, however, are not completely understood. As a result, hazardous waste burning cement kilns have additional compliance requirements to ensure that hazardous waste is burned under good combustion conditions. These additional controls are necessary because of the dioxin and furan precursors that can be formed from improper combustion of hazardous waste, given the hazardous waste firing systems used by some hazardous waste burning cement kilns and the potential for hazardous waste to contain high concentrations of many organic hazardous air pollutants not found in conventional fuels or cement kiln raw materials.

We also require both hazardous waste and nonhazardous waste burning cement kilns to conduct performance testing midway between the five-year periodic comprehensive performance testing to confirm that dioxin/furan emissions do not exceed the standard when the source operates under normal conditions.

C. What Further Subcategorization Considerations Are Made?

We also fully considered further subdividing the class of hazardous waste burning cement kilns itself. For the reasons discussed below, we decided that subcategorization is not needed to determine achievable MACT standards for all hazardous waste burning cement kilns.

We considered, but rejected, subdividing the hazardous waste burning cement kiln source category on the basis of raw material feed preparation, more specifically wet process versus dry process. In the wet process, raw materials are ground, wetted, and fed into the kiln as a slurry. Approximately 70 percent of the hazardous waste burning cement kilns in operation use a wet process. In the dry process, raw materials are ground dry and fed into the kiln dry. Within the dry process there are three variations: Long kiln dry process, preheater process, and preheater-precalciner process. We decided not to subcategorize the hazardous waste burning cement kiln category based on raw material feed preparation because: (1) The wet process kilns and all variations of the dry process kilns use similar raw materials, fossil fuels, and hazardous waste fuels; (2) the types and concentrations of uncontrolled hazardous air pollutant emissions are similar for both process types;[117] (3) the same types of particulate matter pollution control equipment, specifically either fabric filters or electrostatic precipitators, are used by both process types, and the devices achieve the same level of performance when used by both process types; and (4) the MACT controls we identify are applicable to both process types of cement kilns. For example, MACT floor controls for metals and chlorine include good particulate matter control and hazardous waste feedrate control, as discussed below, the particulate matter standard promulgated today is based on the New Source Performance Standard, which applies to all cement kilns irrespective of process type. Further, a cement kiln operator has great discretion in the types of hazardous waste they accept including the content of metals and chlorine in the waste. These basic control techniques—particulate matter control and feedrate control of metals and chlorine—clearly show that subcategorization based on process type is not appropriate.

Some commenters stated that it is not feasible for wet process cement kilns to use fabric filters, especially in cold climates, and thus subcategorization based on process type is appropriate. The problem, commenters contend, is that the high moisture content of the flue gas will clog the fabric if the cement-like particulate is wetted and subsequently dried, resulting in reduced performance and early replacement of the fabric filter bags. Other commenters disagreed with these assertions and stated that fabric filter technology can be readily applied to wet process kilns given the exit temperatures of the combustion gases and the ease of insulating fabric filter systems to minimize cold spots in the baghouse to avoid dew point problems and minimize corrosion. These commenters pointed to numerous wet process applications currently in use at cement kilns with fabric filter systems located in cold climates to support their claims.[118] In light of the number of wet process kilns already using fabric filters and their various locations, we conclude that wet process cement kilns can be equipped with fabric filter systems and that subdividing by process type on this basis is not necessary or warranted. A review of the particulate matter emissions data for one wet hazardous waste burning cement kiln using a fabric filter shows that it is achieving the particulate matter standard. We do not have data in our data base from the only other wet hazardous waste burning cement kiln using a fabric filter; however, this cement kiln recently installed and upgraded to a new fabric filter system.

We also fully considered, but ultimately rejected, subdividing the hazardous waste burning cement kiln source category between long kilns and short kilns (preheater and preheater-precalciner) technologies, and those with in-line kiln raw mills. This subcategorization approach was recommended by many individual cement manufacturing member companies and a cement manufacturing trade organization. Based on information on the types of cement kilns that are currently burning hazardous waste, these three subcategories consist of the following four subdivisions: (1) Short kilns with separate by-pass and main stacks; (2) short kilns with a single stack that handles both by-pass and preheater or precalciner emissions; (3) long dry kilns that use kiln gas to dry raw meal in the raw mill; and (4) others wet kilns, and long dry kilns not using in-line kiln raw mill drying. Currently, each of the first three categories consists of only one cement kiln facility while

[117] Although dry process kilns with a separate by-pass stack can have higher metals emissions from that stack compared to the main stack of other kilns, today's rule allows such kilns to flowrate-average its emissions between the main and by-pass stack. The average emissions are similar to the emissions from dry and wet kilns that have only one stack. Similarly, kilns with in-line raw mills have higher mercury emissions when the raw mill is off. Today's rule allows such kilns to time-weight average their emissions, however, and the time-weighted emissions for those kilns are similar to emissions from other hazardous waste burning cement kilns.

[118] We are aware of four wet process cement kiln facilities operating with fabric filters: Dragon (Thomaston, ME), Giant (Harleyville, SC), Holnam (Dundee, MI), and LaFarge (Paulding, OH). Commenters also identified kilns in Canada operating with fabric filters.

the kilns at the remaining 15 facilities are in the fourth category: wet kilns or long dry kilns that do not use in-line kiln raw mill drying.

Commenters state that these subcategories should be considered because the unique design or operating features of the different types of kilns could have a significant impact on emissions of one or more hazardous air pollutants that we proposed to regulate. Specifically, commenters noted the potential flue gas characteristic differences for cement kilns using alkali bypasses on short kilns and in-line kiln raw mills. For example, kilns with alkali bypasses are designed to divert a portion of the flue gas, approximately 10–30%, to remove the problematic alkalis, such as potassium and sodium oxides, that can react with other compounds in the cool end of the kiln resulting in operation problems. Thus, bypasses allow evacuation of the undesirable alkali metals and salts, including semivolatile metals and chlorides, entrained in the kiln exit gases before they reach the preheater cyclones. As a result, the commenters stated that the emission concentration of semivolatile metals in the bypass stack is greater than in the main stack, and therefore the difference in emissions supports subcategorization.

We agree, in theory, that the emissions profile for some hazardous air pollutants can be different for the three kilns types—short kilns with and without separate bypass stacks, long kilns with in-line kiln raw mills. To consider this issue further, we analyzed floor control and floor emissions levels based only on the data and information from the other long wet kilns and long dry kilns not using raw mill drying. We then considered whether the remaining three kiln types could apply the same MACT controls and achieve the resulting emission standards. We conclude that these three types of kilns at issue can use the MACT controls and achieve the corresponding emission levels identified in today's rule for the wet kilns and long dry kilns not using raw mill drying.[119] As a result, we conclude that there is no practical necessity driving a subcategorization approach even though one would be theoretically possible. Further, to ensure that today's standards are achievable by all cement kilns, we establish a provision that allows cement kilns operating in-line kiln raw mills to average their emissions based on a time-weighted average concentration that considers the length of time the in-line raw mill is on-line and off line. We also adopt a provision that allows short cement kilns with dual stacks to average emissions on a flow-weighted basis to demonstrate compliance with the emissions standards. (See Part Five, Section X—Special Provisions for a discussion of these provisions.)

In the case of hydrocarbons and carbon monoxide, we developed final standards that reflect the concerns raised by several commenters. We determined that this approach best accommodated the unique design and operating differences between long wet and long dry process and short kilns using either a preheater or a preheater and precalciner.

Existing hazardous waste preheater and preheater-precalciner cement kilns, one of each type is burning hazardous waste, are equipped with bypass ducts that divert a portion of the kiln off-gas through a separate particulate matter control device to remove problematic alkali metals. Long cement kilns do not use bypasses designed to remove alkali metals. The significance of this operational difference is that hydrocarbon and carbon monoxide levels in the bypass gas of short kilns is more representative of the combustion efficiency of burning hazardous waste and other fuels in the kiln than the measurements made in the main stack. Main stack gas measurements of hydrocarbons and carbon monoxide, regardless of process type, also include contributions from trace levels of organic matter volatilized from the raw materials, which can mask the level of combustion efficiency achieved in the kiln.

Today's tailored standards require cement kilns to monitor hydrocarbons and carbon monoxide at the location best indicative of good combustion. For short kilns with bypasses, the final rule requires monitoring of hydrocarbons and carbon monoxide in the bypass. Long kilns are required to comply with the hydrocarbon and carbon monoxide standards in the main stack. However, long kilns that operate a mid-kiln sampling system, for the purpose of removing a representative portion of the kiln off-gas to measure combustion efficiency, can comply with the hydrocarbon and carbon monoxide standards at the midkiln sampling point.

In addition, establishing separate hydrocarbon and carbon monoxide standards reflects the long and short kiln subcategorization approach recommended by some commenters. The standards differ because MACT floor control for hydrocarbons and carbon monoxide is based primarily on the existing requirements of the Boiler and Industrial Furnace rule. In that rule, the unique design and operating features of long and short kilns were considered in establishing type specific emission limits for hydrocarbons and carbon monoxide. Thus, MACT floor control for long and short kilns is different. However, we note these same unique design and operating features were not a factor in establishing standards for other pollutants, including mercury, semivolatile and low volatile metals, and hydrochloric acid/chlorine gas, in the Boiler and Industrial Furnace rule.

For the reasons discussed above, subcategorization would not appear to be needed to establish uniform, achievable MACT standards for all cement kilns burning hazardous waste. Thus, because the differences among kiln types "does not affect the feasibility and effectiveness of air pollution control technology," subcategorization is not appropriate. S. Rep. No. 228, 101st Cong. 1st sess. 166.

D. What Are The Standards for Existing and New Cement Kilns?

1. What Are the Standards for Cement Kilns?

In this section, the basis for the emissions standards for cement kilns is discussed. The kiln emission limits apply to the kiln stack gases, in-line kiln raw mill stack gases if combustion gases pass through the in-line raw mill, and kiln alkali bypass stack gases if discharged through a separate stack from cement plants that burn hazardous waste in the kiln. The emissions standards are summarized below:

[119] USEPA, "Final Technical Support Document for HWC MACT Standards, Volume III: Selection of MACT Standards and Technologies," July 1999.

of combustion intensity and efficiency for kilns without by-pass sampling systems. This is due to carbon monoxide generation by disassociation of carbon dioxide to carbon monoxide at the high sintering zone temperatures and evolution of carbon monoxide from the trace organic constituents in raw material feedstock.[144] (See 56 FR at 7150, 7153–55). Thus, carbon monoxide can be a too conservative surrogate for this type of kiln for potential emissions of hazardous air pollutants from combustion of hazardous waste. There are other sources of carbon monoxide unrelated to combustion of hazardous waste.[145]

Second, requiring continuous compliance with both a carbon monoxide and hydrocarbon emission limitation in the stack can be redundant for control of organic emissions from combustion of hazardous waste because: (1) Hydrocarbon alone is a direct and reliable surrogate for organic hazardous air pollutants; and (2) in most cases carbon monoxide is a conservative indicator of good combustion conditions and thus good control of organic hazardous air pollutants. As discussed in the following paragraphs, however, we have concluded that a source must demonstrate compliance with the hydrocarbon standard during the comprehensive performance test if it elects to continuously comply with the carbon monoxide standard to ensure that carbon monoxide is an adequate continuously monitored indicator of combustion efficiency. See Part Four, Section IV of the preamble for a discussion of the merits of using limits on stack gas concentrations of carbon monoxide and hydrocarbon to control organic emissions.

One commenter suggested cement kilns be given the option to comply with a carbon monoxide limit of 100 ppmv instead of the 20 ppmv hydrocarbon limit. The commenter emphasized that this option is currently allowed under the RCRA boiler and industrial furnace regulations, and that it would be conservative because hydrocarbon levels would always be below 20 ppmv when carbon monoxide levels are below 100 ppmv. As discussed below, we agree that cement kilns should be given the option to comply with either standard, but do not agree that compliance with the carbon monoxide standard ensures compliance with the hydrocarbon standard.

We have determined that it is necessary to require a source that elects to continuously comply with the carbon monoxide standard to also demonstrate compliance with the 20 ppmv hydrocarbon standard during the comprehensive performance test. We concluded that this requirement is necessary because we have limited data that shows a source can produce high hydrocarbon emissions while simultaneously producing low carbon monoxide emissions. This requirement to demonstrate compliance with the hydrocarbon standard during the performance test is sufficient to ensure that carbon monoxide alone is an appropriate continuously monitored indicator of combustion efficiency. See Part 4, Section IV.B, for a more detailed discussion. Consistent with this principle, incinerators and lightweight aggregate kilns are also required to demonstrate compliance with hydrocarbon standard during the comprehensive performance test if they elect to comply with the carbon monoxide standard.

In today's final rule, we are identifying a carbon monoxide level of 100 ppmv and a hydrocarbon level of 20 ppmv as floor control for existing sources because they are currently enforceable Federal standards for hazardous waste burning cement kilns. See § 266.104(b) and (c). As current rules allow, sources would have the option of complying with either limit. However, sources that elect to comply with the carbon monoxide standard must also demonstrate compliance with the hydrocarbon standard during the comprehensive performance test.

Given that these are current RCRA rules, all cement kilns without by-pass sampling systems can currently achieve these emission levels. Thus, we estimate no emissions reductions (or new costs) for compliance with these floor levels.

b. What Are Our Beyond-the-Floor Considerations for Existing Sources? In the April 1996 proposal, we identified beyond-the-floor control levels for carbon monoxide and hydrocarbon in the main stack of 50 ppmv and 6 ppmv, respectively. (See 61 FR at 17397.) These beyond-the-floor levels were based on the use of a combustion gas afterburner. We indicated in the proposal, however, that the beyond-the-floor control was not practical since no kilns currently achieved these emission levels, and because of the high costs to retrofit a kiln with an afterburner.

One commenter wrote that we rejected the 50 ppmv and 6 ppmv beyond-the-floor carbon monoxide and hydrocarbon standards, respectively, without providing any justification. In order to confirm the reasoning discussed above, we have now estimated that the annualized cost for an afterburner for cement kilns will range from $3–8 million dollars per facility.[146] As proposed, and as we reiterated in the May 1997 NODA a beyond-the-floor standard based on an afterburner would be not be cost-effective due to the high retrofit costs and minimal incremental emissions reductions, and we do not adopt a beyond-the-floor standard for existing cement kilns.

In summary, we adopt the floor emission levels as standards for carbon monoxide, 100 ppmv, and hydrocarbons, 20 ppmv.

c. What Is the MACT Floor for New Sources? In the April 1996 proposal (see 61 FR at 17401) and the May 1997 NODA, we identified a new source hydrocarbon floor emission level of 20 ppmv for new cement kilns not equipped with by-pass sampling systems based on the current Federally-enforceable BIF standards. The hydrocarbon limit is based on control of organics in raw materials coupled with good combustion practices.

In developing the final rule, we considered the comment discussed above that the rule should allow compliance with either a carbon monoxide standard of 100 ppmv or a hydrocarbon standard of 20 ppmv. Given that this option is available under the current BIF rule for new and existing sources, we now conclude that it represents MACT floor for new sources, except as discussed below.

As discussed previously, we have also proposed MACT standards for nonhazardous waste burning cement kilns. See 63 FR 14182, March 24, 1998. In that proposal, we determined that some existing sources have used the combination of feed material selection, site location, and feed material blending to optimize operations. We then concluded that site selection based on availability of acceptable raw material hydrocarbon content is a feasible approach to control hydrocarbon emissions at new sources. See 63 FR at 14202–03. We proposed a new source

[144] Raw materials enter the upper end of the kiln and move counter-current to the combustion gas. Thus, as the raw materials are heated in the kiln, organic compounds can evolve from trace levels of organics in the raw materials. These organic compounds can be measured as hydrocarbons and, when only partially oxidized, carbon monoxide. This process is not related to combustion of hazardous waste or other fuels in the combustion zone at the other end of the kiln.

[145] Of course, if a source elects to comply with the carbon monoxide standard, then we are more assured of good combustion conditions in the combustion zone, and thus good control of organic hazardous air pollutants that could be potentially emitted from feeding hazardous waste in the combustion zone.

[146] See "Final Technical Support Document for Hazardous Waste Combustor MACT Standards, Volume V: Emission Estimates and Engineering Costs", February, 1999.

level proposed. Therefore, the cost-effectiveness of a beyond-the-floor standard would be less attractive than the number we rejected at proposal. As a result, we must reaffirm that conclusion here.

Limiting the Feedrate of Chlorine in the Hazardous Waste. We also considered a beyond-the-floor standard for hydrochloric acid/chlorine gas based on additional feedrate control of chlorine in the hazardous waste. We are concerned, however, that cement kilns making low alkali cement may not be able to achieve a beyond-the-floor standard by controlling feedrate of chlorine in the hazardous waste. As noted above, chlorine is sometimes added specifically to volatilize potassium and sodium compounds that must be removed from the clinker to produce low alkali cement. Based on limited data submitted by a cement facility manufacturing low alkali cement, achievability of a beyond-the-floor standard of 70 ppmv, representing a 45% reduction from the floor level, may not be feasible for this source using feedrate control and others by inference. Therefore, we conclude that a beyond-the-floor standard based on chlorine feedrate control in the hazardous waste is not appropriate.

Limiting the Feedrate of Chlorine in the Raw Materials. A source can achieve a reduction in hydrochloric acid/chlorine gas emissions by substituting a feed material containing lower levels of chlorine for a primary raw material with higher levels of chlorine. This beyond-the-floor option is less cost-effective compared to the scrubbing options evaluated above because cement kilns are sited proximate to the primary raw material supply and transporting large quantities of an alternative source of raw material(s) is not technically achievable. Therefore, we do not adopt a hydrochloric acid/chlorine gas beyond-the-floor standard based on limiting the feedrate of chlorine in raw materials.

In summary, we establish the hydrochloric acid/chlorine gas standard for existing hazardous waste burning cement kilns at the floor level of 130 ppmv.

c. What Is the MACT Floor for New Sources? At proposal, we defined floor control for new sources as hazardous waste feedrate control for chlorine and the proposed floor level was 630 ppmv. (See 61 FR at 17401.) In the May 1997 NODA, we concluded that the floor control and emission level for existing sources for hydrochloric acid/chlorine gas would also be appropriate for new sources. Floor control was based on limiting hazardous waste feedrates of chlorine. After screening out some data with anomalous system removal efficiencies compared to the majority of sources, we established the floor level at the test condition average of the breakpoint source. We identified a floor level for new kilns of 120 ppmv. (See 62 FR at 24230.)

As discussed above for existing sources, in developing the final rule, we use the aggregate feedrate approach to identify MACT floors for hydrochloric acid/chlorine gas. The resulting MACT emissions floor for new hazardous waste burning cement kilns is 86 ppmv.

d. What Are Our Beyond-the-Floor Considerations for New Sources? In the proposal, we considered a beyond-the-floor standard for new cement kilns of 67 ppmv based on wet scrubbing and concluded that it would not be cost-effective. In the May 1997 NODA, we also concluded that a beyond-the-floor standard based on wet scrubbing would likewise not be cost-effective. Considering the level of the floor standard for new kilns, we do not believe that a more stringent beyond-the-floor standard is warranted for the final rule, especially considering our concerns for cement kilns manufacturing low alkali cements.

In summary, we adopt the floor level of 86 ppmv as the standard for hydrochloric acid/chlorine gas for new sources.

8. What Are the Hydrocarbon and Carbon Monoxide Standards for Kilns Without By-Pass Sampling Systems? [138]

See § 63.1205(a)(5) and (b)(5).

In today's rule, we establish hydrocarbon and carbon monoxide standards for new and existing cement kilns without by-pass sampling systems as surrogates to control emissions of nondioxin organic hazardous air pollutants. The standards for existing sources limit hydrocarbon or carbon monoxide concentrations to 20 ppmv [139] or 100 ppmv, [140] respectively. The standards for new sources limit: (1) Hydrocarbons to 20 ppmv; or (2) carbon monoxide to 100. New, greenfield [141] kilns that elect to comply with the 100 ppmv carbon monoxide standard, however, must also comply with a 50 ppmv [142] hydrocarbon standard. New and existing sources that elect to comply with the 100 ppmv carbon monoxide standard, including new greenfield kilns that elect to comply with the carbon monoxide standard and 50 ppmv hydrocarbon standard, must also demonstrate compliance with the 20 ppmv hydrocarbon standard during the comprehensive performance test.[143] (See Part Four, Section IV.B of the preamble for the rationale for this requirement.) We discuss the rationale for these standards below.

a. What Is the MACT Floor for Existing Sources? As discussed in Part Four, Section II.B.2, we proposed limits on hydrocarbon emissions for kilns without by-pass sampling systems as a surrogate to control nondioxin organic hazardous air pollutants. In the April 1996 proposal (61 FR at 17397), we identified a hydrocarbon floor emission level of 20 ppmv for cement kilns not equipped with by-pass sampling systems, and proposed that floor control be based on the current federally-enforceable RCRA boiler and industrial furnace standards, control of organics in raw materials coupled with operating under good combustion practices to minimize fuel-related hydrocarbon. In the May 1997 NODA, we also indicated that this approach was appropriate.

Some commenters stated that a carbon monoxide limit of 100 ppmv was necessary for these cement kilns to better control organic hazardous air pollutants. Commenters also wrote that, alone, neither carbon monoxide nor hydrocarbons is an acceptable surrogate for organic hazardous air pollutant emissions. Additionally, commenters suggested that by requiring both carbon monoxide and hydrocarbon limits, we would further reduce emissions of organic hazardous air pollutants.

We conclude that continuous compliance with both a carbon monoxide and hydrocarbon standard is unwarranted for the following reasons. First, stack gas carbon monoxide levels are not a universally reliable indicator

[138] See USEPA, "Final Technical Support Document for Hazardous Waste Combustor MACT Standards. Volume I: Description of Source Categories," July 1999, for further explanation of by-pass and midkiln sampling systems. Hydrocarbon and carbon monoxide standards for kilns equipped with by-pass sampling systems are discussed in Section VI.D.9 f the text.

[139] Hourly rolling average, reported as propane, dry basis, and corrected to 7% oxygen.

[140] Hourly rolling average, dry basis, corrected to 7% oxygen.

[141] A greenfield cement kiln is a kiln that commenced construction or reconstruction after April 19, 1996 at a site where no cement kiln previously existed, irrespective of the class of kiln (i.e., nonhazardous waste or hazardous waste burning). A newly constructed or reconstructed cement kiln at an existing site would not be classified as a greenfield cement kiln, and would be subject to the same carbon monoxide and hydrocarbon standards as an existing cement kiln.

[142] Thirty day block average, reported as propane, dry basis, and corrected to 7 percent oxygen.

[143] As discussed in Part 5, Section X.F, sources that feed hazardous waste at a location other than the end where products are normally discharged and where fuels are normally fired must comply with the 20 ppmv hydrocarbon standard i.e., these sources do not have the option to comply with the carbon monoxide standard).

Limiting the Feedrate of Low Volatile Metals in the Raw Materials. Sources can achieve a reduction in low volatile metal emissions by substituting a feed material containing lower levels of arsenic, beryllium, and/or chromium for a primary raw material with higher levels of these metals. We believe that this beyond-the-floor option would be even less cost-effective than either of the options evaluated above, however. Cement kilns are sited proximate to primary raw material supply and transporting large quantities of an alternative source of raw material(s) is likely to be cost-prohibitive. Therefore, we do not adopt a low volatile metal beyond-the-floor standard based on limiting the feedrate of low volatile metals in raw materials.

For the reasons discussed above, we do not adopt a beyond-the-floor level for low volatile metals and establish the emission standard for existing hazardous waste burning cement kilns at 56 μg/dscm.

c. What Is the MACT Floor for New Sources? In the proposal, we defined floor control as a fabric filter with an air-to-cloth ratio less than 2.3 acfm/ft^2 and a hazardous waste feedrate control level of 25,000 μg/dscm, expressed as a maximum theoretical emission concentration. The proposed floor for new cement kilns was 44 μg/dscm. (61 FR at 17400.) In the May 1997 NODA, we concluded that the floor control and emission level for existing sources for low volatile metals would also be appropriate for new sources. Floor control was based on a combination of good particulate matter control and limiting hazardous waste feedrate of low volatile metals. We used a breakpoint analysis of the low volatile metal emissions data to exclude sources achieving substantially poorer low volatile metal control than the majority of sources. We established the floor level at the test condition average of the breakpoint source. The NODA floor was 63 μg/dscm. (62 FR at 24230.)

As discussed above for existing sources, in developing the final rule we use the aggregate feedrate approach to identify MACT floors for the metals and hydrochloric acid/chlorine gas in combination with MACT floor control for particulate matter. Based on the low volatile metal feedrate in hazardous waste from the single best performing cement kiln using floor control for particulate matter, the MACT floor for new hazardous waste burning cement kilns is 54 μg/dscm.

d. What Are Our Beyond-the-Floor Considerations for New Sources? In the proposal and May 1997 NODA, we considered a low volatile metal beyond-the-floor level for new sources, but determined it would not be cost effective. For reasons similar to those discussed for existing sources, we do not believe that a beyond-the-floor standard is warranted for new cement kilns due to the high expected compliance cost and relatively low reductions in emissions of low volatile metals. Therefore, we adopt a low volatile metals standard of 54 μg/dscm for new hazardous waste burning cement kilns.

7. What Are the Hydrochloric Acid and Chlorine Gas Standards?

In today's rule, we establish standards for existing and new cement kilns that limit hydrochloric acid and chlorine gas emissions to 130 and 86 ppmv, respectively. The rationale for these standards is discussed below.

a. What Is the MACT Floor for Existing Sources? In the proposal, we identified floor control for hydrochloric acid/chlorine gas as feedrate control of chlorine in the hazardous waste and proposed a floor standard of 630 ppmv. (61 FR at 17396.) In the May 1997 NODA, we used a data analysis method similar to that at proposal and discussed a floor emission level of 120 ppmv. (62 FR at 24230.)

Some commenters to the May 1997 NODA expressed concern that cement kilns may not be able to meet the hydrochloric acid/chlorine gas standard while making low alkali cement. Commenters noted that chlorine is sometimes added specifically to volatilize potassium and sodium compounds that must be removed to produce low alkali cement. One commenter manufacturing a low alkali cement submitted data showing a large range in hydrochloric acid/chlorine gas emissions while operating under varying conditions and production requirements. This commenter stated that they may not be able to meet the NODA hydrochloric acid/chlorine gas standard of 120 ppmv while making low alkali cement. We conclude, however, that the data they submitted do not adequately support this ultimate conclusion. The commenter's emissions data range from 6 ppmv to 83 ppmv while operating under RCRA compliance testing conditions. These emission levels are well below the final standard of 130 ppmv, and the expected operational range in this rule is 70% of the standard. We conclude that the hydrochloric acid/chlorine gas standard of 130 ppmv finalized today is readily achievable by all cement kilns irrespective of the type of cement manufactured.

For today's rule, we use a revised engineering evaluation and data analysis method to establish the MACT floor for hydrochloric acid and chlorine gas on the same underlying data previously noticed for comment. Using the aggregate feedrate approach discussed previously, we establish a hydrochloric acid/chlorine gas floor emission level of 130 ppmv.

We estimate that approximately 88 percent of cement kilns in our data base currently meet the floor level. The national annualized compliance cost for cement kilns to reduce hydrochloric acid/chlorine gas emissions to comply with the floor level is $1.4 million for the entire hazardous waste burning cement industry and will reduce hydrochloric acid/chlorine gas emissions by 383 Mg/yr or 12 percent from current baseline emissions.

b. What Are Our Beyond-the-Floor Considerations for Existing Sources? In the proposal, we defined beyond-the-floor control as wet scrubbing with a 99 percent removal efficiency, but determined that a beyond-the-floor standard would not be cost-effective. (61 FR at 17397.) In the May 1997 NODA, we identified a more stringent floor standard and therefore reasoned that a beyond-the-floor standard based on wet scrubbing would likely also not be cost-effective. (62 FR at 24230.)

For today's rule, we identified three potential beyond-the-floor techniques for control of hydrochloric acid/chlorine gas emissions: (1) Scrubbing; (2) limiting the feedrate of chlorine in the hazardous waste; and (3) limiting the feedrate of chlorine in the raw materials. We discuss our analysis of each option below.

Scrubbing. We continue to believe that a beyond-the-floor standard based on dry or wet scrubbing is not likely to be cost-effective. Cement kilns achieve control of hydrochloric acid/chlorine gas emissions from alkaline raw materials in the kiln. Control effectiveness varies among kilns based on the alkalinity of the raw materials. Thus, the cement manufacturing process serves essentially as a dry scrubber. We conclude, therefore, that the addition of a dry scrubber will only marginally improve hydrochloric acid/chlorine gas removal and is not warranted as beyond-the-floor control.

It is also our judgment that a beyond-the-floor standard based on wet scrubbing is not warranted. The total estimated engineering retrofit costs would be approximately equivalent to those identified at proposal for this option. However, emissions reductions would be less given that the final MACT floor level is more stringent than the

using the aggregate feedrate approach to identify MACT floors for the metals. See Methodology Section for detailed discussion of aggregate feedrate approach. Using this approach, we establish the semivolatile metal floor emission level for new sources at 180 µg/dscm.

d. What Are Our Beyond-the-Floor Considerations for New Sources? In the April 1996 NPRM and May 1997 NODA, we considered a semivolatile metal beyond-the-floor emission level for new sources, but determined that it would not be cost-effective.

For the final rule, we do not consider a beyond-the-floor level for new cement kilns because the MACT floor for new cement kilns is already lower than the beyond-the-floor emission standard for existing sources. As a result, a beyond-the-floor standard for new cement kilns is not warranted due to the likely significant costs of control and the minimal incremental emissions reductions. In addition, our policy goal of state of the art control of lead is achieved at the floor standard for new sources. We, therefore, adopt a semivolatile metal floor standard of 180 µg/dscm for new hazardous waste burning cement kilns.

6. What Are the Low Volatile Metals Standards?

We establish standards for existing and new cement kilns in today's rule that limit low volatile metal emissions to 56 and 54 µg/dscm, respectively. The rationale for these standards is discussed below.

a. What Is the MACT Floor for Existing Sources? In the April 1996 NPRM, we defined floor control as either: (1) A fabric filter with an air-to-cloth ratio less than 2.3 acfm/ft^2 and a hazardous waste feedrate level of 140,000 µg/dscm, expressed as a maximum theoretical emission concentration; or (2) an electrostatic precipitator with a specific collection area of 350 ft^2/kacfm and the same hazardous waste feedrate level of 140,000 µg/dscm. The proposed floor level was 130 µg/dscm. (See 61 FR at 17396.) In the May 1997 NODA, we used a breakpoint analysis to identify sources that were not using floor control with respect either to low volatile metals hazardous waste feedrate or emissions control. Under this approach, we ranked low volatile metals emissions data from sources that were achieving the particulate matter floor of 69 mg/dscm or better. We identified the floor level as the test condition average associated with the breakpoint source. Thus, sources with atypically high emissions because of high low volatile metals feedrates or poor low volatile metals control, even though they were using floor control for particulate matter, were screened from the pool of sources used to define the floor emission level. The May 1977 NODA MACT floor level was 63 µg/dscm. (See 62 FR at 24229.)

We received limited comments in response to the NPRM and May 1997 NODA concerning the low volatile metals floor standard. We received comments, however, on several overarching issues including the appropriateness of considering feedrate control of metals including low volatile metals in hazardous waste as a MACT floor control technique and the specific procedure of identifying breakpoints in arrayed emissions data. These issues and our responses to them are discussed in the floor methodology section in Part Four, Section V.

Today we use a revised engineering evaluation and data analysis method to establish the MACT floor for low volatile metals on the same underlying data previously noticed for comment. As explained earlier, the aggregate feedrate approach, in conjunction with floor control for particulate matter, replaces the breakpoint analysis for metals and results in a low volatile metal floor emission level of 56 µg/dscm.

We estimate that over 76 percent of cement kilns in our data base meet the floor level. The national annualized compliance cost for cement kilns to reduce low volatile metal emissions to comply with the floor level is $0.8 million for the entire hazardous waste burning cement industry, and will reduce low volatile metal emissions by 0.2 Mg/yr or approximately 25 percent from current baseline emissions.

b. What Are Our Beyond-the-Floor Considerations for Existing Sources? In the proposal, we considered a beyond-the-floor standard for low volatile metals based on improved particulate matter control. However, we concluded that a beyond-the-floor standard would not likely be cost-effective based on the limited emissions reductions of low volatility metals. In the May 1997 NODA, we considered a lower particulate matter emissions level, based on improved particulate matter control, as a beyond-the-floor standard with corresponding beyond-the-floor reductions in low volatile and semivolatile metals. Even though we did not quantify cost-effectiveness values, we expressed concern that a beyond-the-floor standard would not likely be cost-effective. (62 FR at 24229.)

For today's final rule, we identified three potential beyond-the-floor techniques for control of low volatile metals: (1) Improved particulate matter control; (2) limiting the feedrate of low volatile metals in the hazardous waste; and (3) limiting the feedrate of low volatile metals in the raw materials. We discuss the results of our analysis of each option below.

Improved Particulate Matter Control. Our judgment is that a beyond-the-floor standard based on improved particulate matter control would be less cost-effective than a beyond-the-floor standard based on limiting the feedrate of low volatile metals in the hazardous waste. First, our data show that all cement kilns are already achieving greater than a 99% system removal efficiency for low volatile metals, with most attaining 99.99% removal. Thus, equipment retrofit costs for improved control would be significant and result in only a small increment in reduction of emissions. Our beyond-the-floor analysis for semivolatile metals supports this conclusion. There, the semivolatile metals analysis showed that the beyond-the-floor option based on limiting the feedrate of semivolatile metals was approximately 30% more cost-effective than a beyond-the-floor option based on improved particulate matter control. We believe the low volatile metals would require similar particulate matter control device retrofits at cement kilns as for semivolatile metals. However, the total emissions reduction achieved would be less because hazardous waste burning cement kilns emit less low volatile metals than semivolatile metals. We do not have any of the serious concerns present for semivolatile metals that suggest we should accept a more marginal cost-effectiveness. Thus, we conclude that a beyond-the-floor standard for low volatile metals based on improved particulate matter control is not warranted.

Limiting the Feedrate of Low Volatile Metals in the Hazardous Waste. We also considered a beyond-the-floor standard of 40 µg/dscm for low volatile metals based on additional feedrate control of low volatile metals in the hazardous waste. This would reduce the floor emission level by approximately 30 percent. Our investigation shows that this beyond-the-floor option would achieve an incremental reduction in low volatile metals of only 0.1 Mg/yr. Given that this beyond-the-floor level would not achieve appreciable emissions reductions, we conclude that cost-effectiveness considerations would likely come into play suggesting that this beyond-the-floor standard is not warranted.

µg/dscm from among the range of possible levels that reflect improved feedrate control. This emission level represents a significant increment of emission reduction from the floor of 650 µg/dscm, it is within the range of levels that are likely to be reasonably achievable using feedrate control, and it is consistent with the incinerator standard thereby advancing a potential policy objective of essentially common standards among combustors of hazardous waste.

The national incremental annualized compliance cost for the remaining cement kilns to meet this beyond-the-floor level, rather than comply with the floor controls, would be approximately $2.7 million for the entire hazardous waste burning cement kiln industry and would provide an incremental reduction, beyond emissions at the MACT floor, in semivolatile metal emissions nationally of 5.5 Mg/yr. The cost-effectiveness of this standard would be approximately $500,000 per additional Mg of semivolatile metals removed. Notwithstanding the relatively poor cost-effectiveness of this standard on a dollar per Mg removed basis, we conclude that additional beyond-the-floor control of the feedrate of semivolatile metals in hazardous waste to achieve an emission level of 240 µg/dscm is warranted because this standard would reduce lead and cadmium emissions which are particularly toxic hazardous air pollutants. See Health Human Effects discussion in USEPA, "Technical Background Document for HWC MACT Standards: Health and Ecological Risk Assessment", July 1999. Further, approximately 90% of the lead and cadmium fed to the cement kiln is from the hazardous waste,[136] not the raw material (about 9%) or coal (about 1%). We are willing to accept a more marginal cost-effectiveness to ensure that hazardous waste combustion sources are using the best controls for pollutants introduced almost exclusively for the burning of hazardous waste. We do so to provide a strong incentive for waste minimization of lead and cadmium sent for combustion. By providing stringent limits, we can help assure that hazardous waste with lead does not otherwise move from better controlled units in other subcategories to units in this subcategory because of a lesser degree of control. Moreover, this beyond-the-floor semivolatile metal standard supports our Children's Health Initiative in that lead emissions, which are of highest significance to children's health, will be reduced by another 20–25 percent from today's baseline. As part of this initiative, we are committed to reducing lead emissions wherever and whenever possible. Finally, this beyond-the-floor standard is consistent with European Union standards for hazardous waste incinerators of approximately 200 µg/dscm for lead and cadmium combined. For all these reasons, we accept the cost-effectiveness of this level of feedrate control and adopt a beyond-the-floor standard of 240 µg/dscm for existing cement kilns.

Additionally, we received comments shortly before promulgation from the cement kiln industry that expressed their achievability and economic concerns with a beyond-the-floor standard in the range of 240 µg/dscm based on limiting the feedrate of semivolatile metals in the hazardous waste. We considered their comments in adopting the 240 µg/dscm beyond-the-floor standard and included a copy of their November 18, 1998 presentation to the Office of Management and Budget in the docket along with our responses to their concerns, many of which are addressed above.

ii. Improved Particulate Matter Control. We also evaluated improved particulate matter control as a beyond-the-floor control option for improved semivolatile metals control. Cadmium and lead are volatile at the high temperatures within the cement kiln itself, but typically condense onto the fine particulate at control device temperatures, where they are collected. As a result, control of semivolatile metals emissions is closely associated with particulate matter control. Examples of improved particulate matter control include the use of more expensive fabric filter bags, optimizing the design and operation features of the existing control equipment, and the addition to or the replacement of control equipment with a new fabric filter.

We evaluated the costs to achieve a beyond-the-floor emission level of 240 µg/dscm based on improved particulate matter control. The national incremental annualized compliance cost for cement kilns to meet this beyond-the-floor level, rather the floor level, would be approximately $4.1 million for the entire hazardous waste burning cement kiln industry and would provide an incremental reduction in semivolatile metal emissions beyond the MACT floor controls of 5.5 Mg/yr. Because this beyond-the-floor control option would have a cost-effectiveness of approximately $800,00 per additional Mg of semivolatile metal removed, contrasted to a cost-effectiveness of approximately $500,000 using hazardous waste feedrate control and remove an identical amount of semivolatile metals, we conclude that basing the beyond-the-floor standard on improved particulate matter control is not warranted.

iii. Limiting the Feedrate of Semivolatile Metals in Raw Materials. A source can achieve a reduction in semivolatile metal emissions by substituting a feed material containing lower levels of lead and/or cadmium for a primary raw material with higher levels of these metals. We expect this beyond-the-floor option to be less cost-effective compared to either of the options evaluated above. Cement kilns are sited proximate to primary raw material supply and transporting large quantities of an alternative source of raw material(s) is likely to be cost-prohibitive. Therefore, we are not adopting a semivolatile metal beyond-the-floor standard based on limiting the feedrate of semivolatile metals in raw materials.[137]

Thus, the promulgated semivolatile metals standard for existing hazardous waste burning cement kilns is a beyond-the-floor standard of 240 µg/dscm based on limiting the feedrate of semivolatile metals in the hazardous waste.

c. What Is the MACT Floor for New Sources? In the proposal, we defined floor control as a fabric filter with an air-to-cloth ratio less than 2.1 acfm/ft^2 and a hazardous waste feedrate level of 36,000 µg/dscm, expressed as a maximum theoretical emission concentration. The proposed floor emission level for new cement kilns was 55 µg/dscm. (See 61 FR at 17400.) In the May 1997 NODA, we concluded that the floor control and emission level for existing sources for semivolatile metals also would be appropriate for new sources. Floor control was based on a combination of good particulate matter control *and* limiting hazardous waste feedrate of semivolatile metals. We used a breakpoint analysis of the semivolatile metal emissions data to exclude sources achieving substantially poorer semivolatile metal control than the majority of sources because of atypically high semivolatile metals feedrates or poor emission control. We established the floor level at the test condition average of the breakpoint source: 670 µg/dscm. (See 62 FR at 24229.)

As discussed above for existing sources, we developed the final rule

[136] USEPA, "Final Technical Support document for HWC MACT Standards, Volume III: Selection of MACT Standards and Technologies", July 1999.

[137] We, however, reject the proposition in comments that we are without legal authority to regulate HAPs in raw materials processed in cement kilns based on legislative history to the 1990 amendments. This legislative history is not reflected in the statutory text, which unambiguously gives us that authority.

designed and properly operated fabric filters and electrostatic precipitators. Thus, floor control for new cement kilns is also a well-designed and properly operated fabric filter and electrostatic precipitator. As discussed for existing sources, we conclude that expressing the floor based on the New Source Performance Standards is appropriate for the final rule. Therefore, the MACT floor level for new cement kilns is 0.15 kg/Mg dry feed and opacity not to exceed 20 percent.

d. What Are Our Beyond-the-Floor Considerations for New Sources? In the April 1996 NPRM and May 1997 NODA, we considered a beyond-the-floor standard based on improved particulate matter control to be consistent with existing sources. However, we proposed that such a beyond-the-floor level was not likely cost-effective.

As discussed for existing sources, we considered a beyond-the-floor level of 34 mg/dscm, approximately one-half the New Source Performance Standard, for new cement kilns based on improved particulate matter control. For analysis purposes, improved particulate matter control entails the use of higher quality fabric filter bag material. We then determined the cost of achieving this level of particulate matter, with corresponding reductions in the nonenumerated metals for which particulate matter is a surrogate, to determine if this beyond-the-floor level would be appropriate. The incremental annualized compliance cost for one new large cement kiln to meet this beyond-the-floor level, rather than comply with floor controls, would be approximately $309,000 and would provide an incremental reduction in nonenumerated metals emissions of approximately 0.18 Mg/yr.[135] For a new small cement kiln, the incremental annualized compliance cost would be approximately $120,000 and would provide an incremental reduction in nonenumerated metals emissions of approximately 0.04 Mg/yr. Based on these costs of approximately $1.7–3.0 million per additional Mg of nonenumerated metals removed, we conclude that a beyond-the-floor standard of 0.015 gr/dscf is not justified due to the high cost of compliance and relatively small nonenumerated metals emission reductions. Thus, the particulate matter standard for new cement kilns is the floor level of 0.15 kg/Mg dry feed and opacity not to exceed 20 percent.

5. What Are the Semivolatile Metals Standards?

Today's rule establishes standards for existing and new cement kilns that limit semivolatile metals emissions to 240 and 180 µg/dscm, respectively. The rationale for these standards is discussed below.

a. What Is the MACT Floor for Existing Sources? In the April 1996 proposal, we defined floor control as a fabric filter with an air-to-cloth ratio less than 2.1 acfm/ft^2 and a hazardous waste feedrate level of 84,000 µg/dscm, expressed as a maximum theoretical emission concentration. The proposed floor emission level was 57 µg/dscm, based on the level a source with properly designed and operated floor technology could achieve. In the proposed rule, we also solicited comment on an alternative floor approach whereby "equivalent technology" to MACT control is identified and evaluated. This approach resulted in an emission level of 160 µg/dscm (See 61 FR at 17395.) In the May 1997 NODA, we discussed a floor methodology where we used a breakpoint analysis to identify sources that were not using floor control with respect either to semivolatile metals hazardous waste feedrate or emissions control. Under this approach, we ranked semivolatile metals emissions data from sources that were using MACT floor particulate matter control, i.e., sources achieving the New Source Performance Standard or better. We identified the floor level as the test condition average associated with the breakpoint source. Thus, sources with atypically high emissions because of high semivolatile metals feedrates or poor semivolatile metals control even though they appeared to be using floor control for particulate matter were screened from the pool of sources used to define the floor emission level. Based on this analysis, we identified a floor level in the May 1997 NODA of 670 µg/dscm. (See 62 FR at 24228.)

As discussed previously in the methodology section, we use a revised engineering evaluation and data analysis method to establish the MACT floor for semivolatile metals based on the same underlying data previously noticed for comment. The aggregate feedrate approach, in conjunction with floor control for particulate matter, identified a semivolatile metals floor emission level of 650 µg/dscm.

In addition, several commenters stated strongly that the feedrate of semivolatile metals in hazardous waste cannot be considered MACT floor control in conjunction with particulate matter control. These commenters believe that floor control for semivolatile metals is control of particulate matter only. We disagree with these commenters for reasons we discuss in Part Four, Section V of the preamble, mainly that feedrate is currently control for hazardous waste combustors under RCRA regulations, and conclude that control of the feedrate of semivolatile metals in hazardous waste is floor control, in conjunction with particulate matter control.

We estimate that approximately 60 percent of cement kilns currently meet this floor level. The national annualized compliance cost for cement kilns to reduce semivolatile metal emissions to comply with the floor level is $1.3 million for the entire hazardous waste burning cement industry and will reduce semivolatile metal emissions by 19.5 Mg/yr or 65 percent from current baseline emissions.

b. What Are Our Beyond-the-Floor Considerations for Existing Sources? In the proposal, we considered a beyond-the-floor standard for semivolatile metals based on improved particulate matter control below the New Source Performance Standard. However, we concluded that a beyond-the-floor standard would not be cost-effective, given that the semivolatile metal floor level of 57 µg/dscm alone resulted in an estimated 94 percent semivolatile metal reduction in emissions. (see 61 FR at 17396.) In the May 1997 NODA, we considered a lower particulate matter emissions level of 0.015 gr/dscf, based on improved particulate matter control, as a beyond-the-floor standard to further reduce semivolatile and low volatile metals. Even though we did not quantify cost-effectiveness values, we expressed concern that a beyond-the-floor standard would not likely be cost-effective. (see 62 FR at 24229.)

Commenters believed there were several control techniques that should be considered, therefore, we identified three potential beyond-the-floor control techniques in developing the final rule: (1) Limiting the feedrate of semivolatile metals in hazardous waste; (2) improved particulate matter control; and (3) limiting the feedrate of semivolatile metals in raw materials. We conclude that a beyond-the-floor standard is warranted based on limiting the feedrate of semivolatile metals in hazardous waste. The results of each analysis are discussed below.

i. Limiting the Feedrate of Semivolatile Metals in Hazardous Waste. Under this approach, we selected a beyond-the-floor emission level of 240

[135] Based on the data available, the average emissions in sum of the five nonenumerated metals from cement kilns using MACT particulate matter control is approximately 80 µg/dscm. To estimate emission reductions of the nonenumerated metals, we assume a linear relationship between a reduction in particulate matter and these metals.

emissions are comprised largely of entrained raw material and are not significantly affected by burning hazardous waste. Thus, we concur that the standard for particulate matter should be the same for both classes of sources and are therefore adopting the New Source Performance Standard opacity standard for the final rule.[133] In the NPRM and the May 1997 NODA, we proposed to express the particulate matter standard on a concentration basis rather than express it as the same format as the 1971 New Source Performance Standard, which is a production-based emission limit format. However, because we are not yet requiring sources to document compliance with the particulate matter standard by using a particulate matter continuous emissions monitoring system in this final rule[134], we establish and express the floor emission level equivalent to the 1971 New Source Performance Standard. Thus, the particulate matter floor is 0.15 kg/Mg dry feed based on the performance of a well-designed and operated fabric filter or electrostatic precipitator.

Several commenters expressed concern in their comments to the NPRM that the Agency identified separate, different MACT pools and associated MACT controls for particulate matter, semivolatile metals, and low volatile metals, even though all three are controlled, at least in part, by a particulate matter control device. Commenters stated that our approach is likely to result in three different design specifications. We agree with the need to use the same pool for particulate matter, semivolatile metals, and low volatile metals and used the same initial MACT pool to establish the floor levels for these pollutants. See Part Four, Section V for a detailed discussion of our floor methodology.

We estimate that over 60 percent of cement kilns currently meet the floor emission level. The national annualized compliance cost for cement kilns to reduce particulate matter emissions to comply with the floor level is $6.2 million for the entire hazardous waste burning cement industry and will reduce nonenumerated metals and particulate matter emissions by 1.1 Mg/yr and 873 Mg/yr, respectively, or over 30 percent from current baseline emissions.

b. What Are Our Beyond-the-Floor Considerations for Existing Sources? In the proposal and May 1997 NODA, we considered a beyond-the-floor level of 34 mg/dscm (0.015 gr/dscf) based on improved particulate matter control. However, after examining the costs of such control and the relatively low incremental reductions in air emissions that would result, we determined that a beyond-the-floor standard would not likely be cost-effective. (61 FR at 17393.)

Several commenters support a beyond-the-floor option for particulate matter because some cement kilns are readily achieving particulate matter levels well below the floor emission level based on the New Source Performance Standard. Other commenters oppose a beyond-the-floor option for cement kilns because of the high costs and anticipated poor cost-effectiveness. In the final rule, we evaluated a beyond-the-floor emission level for existing cement kilns to determine if such a level would be appropriate.

Improved particulate matter control for existing cement kilns would require the use of high efficiency electrostatic precipitators and fabric filters. These may include fabric filters with low air-to-cloth ratios, high performance fabrics, electrostatic precipitators with large specific collection areas, and advanced control systems. Currently, the majority of hazardous waste burning cement kilns use electrostatic precipitators for particulate matter control and usually achieve removal efficiencies greater than 99.8%. Cement kilns can meet the MACT floor with well designed and properly operated particulate matter control equipment that for many kilns may require only minor system upgrades from their current systems. A beyond-the-floor standard, however, would likely involve more than a minor system upgrade, and may require new control equipment or retrofitting a baghouse with new higher performance fabric materials. The total annualized costs associated with such major system upgrades would be significant, while only achieving modest incremental emissions reductions in particulate matter and nonenumerated metals.

In the final rule, we considered a beyond-the-floor level of 34 mg/dscm, approximately one-half the New Source Performance Standard, for existing cement kilns based on improved particulate matter control. For analysis purposes, improved particulate matter control entails the use of higher quality fabric filter bag material. We then determined the cost of achieving this level of particulate matter, with corresponding reductions in the nonenumerated metals for which particulate matter is a surrogate, to determine if this beyond-the-floor level would be appropriate. The national incremental annualized compliance cost for cement kilns to meet this beyond-the-floor level, rather than comply with the floor controls, would be approximately $7.4 million for the entire hazardous waste burning cement kiln industry and would provide an incremental reduction in nonenumerated metals emissions nationally beyond the MACT floor controls of 0.7 Mg/yr. Based on these costs of approximately $10.7 million per additional Mg of nonenumerated metals emissions removed, we conclude that this beyond-the-floor option for cement kilns is not acceptably cost-effective nor otherwise justified. Therefore, we do not adopt this beyond-the-floor standard. The promulgated particulate matter standard for existing hazardous waste burning cement kilns is the floor emission level of 0.15 kg/Mg dry feed and opacity not to exceed 20 percent.

c. What Is the MACT Floor for New Sources? In the proposal, we defined floor control based on the performance of a fabric filter with an air-to-cloth ratio of less than 1.8 acfm/ft2. As discussed for existing sources, we proposed the floor level based on the existing cement kiln New Source Performance Standard. 61 FR at 17400. In the May 1997 NODA, we again considered basing the floor emission level on the New Source Performance Standard and solicited comment on the two alternatives to express the standard identical to those discussed above for existing cement kilns. (62 FR at 24228.)

All cement kilns use fabric filters and electrostatic precipitators to control particulate matter. As discussed earlier, we have limited detailed information on the design and operation characteristics of existing control equipment currently used by cement kilns. As a result, we are unable to identify a specific design or technology that can consistently achieve lower emission levels than the controls used by cement kilns achieving the New Source Performance Standard. Cement kilns meet the New Source Performance Standard with well-

[133] We are not adopting the opacity standard component of the New Source Performance Standard for hazardous waste burning lightweight aggregate kilns, however. This is because that opacity standard (see § 60.732) is a measure to ensure compliance with the particulate emissions component of that standard, which is substantially higher than the MACT standard that we promulgate today. Thus, the NSPS opacity standard for lightweight aggregate kilns would not be a useful measure of compliance with today's particulate matter standard for lightweight aggregate kilns.

[134] We anticipate rulemaking on a particulate matter continuous emissions monitoring system requirement for hazardous waste combustors in the near future. Under this rulemaking, combustors would be required to document compliance with national emission standards by complying with continuous emissions monitoring system-based particulate matter levels that are being achieved by sources equipped with MACT controls. See Part Five, Section VII.C. for details.

incremental annualized compliance cost would be approximately $0.9 million and would provide an incremental reduction in mercury emissions beyond the MACT floor controls of approximately 0.04 Mg/yr. Based on these costs of approximately $13–22 million per additional Mg of mercury removed, we concluded that a beyond-the-floor standard of 10 µg/dscm is not justified due to the high cost of compliance and relatively small mercury emissions reductions.

ii. Limiting the Feedrate of Mercury in Hazardous Waste. We also considered a beyond-the-floor standard based on limiting the feedrate of mercury in the hazardous waste. Considering that the floor emission level for new cement kilns is approximately half of the floor emission level for existing kilns (56 versus 120 µg/dscm), we conclude that a mercury beyond-the-floor standard for cement kilns is not warranted. This conclusion is based on the limited incremental emissions reductions achieved [127] and because the cost-effectiveness of beyond-the-floor controls for new cement kilns would be even higher than for existing sources, which we found unacceptable in paragraph (b) above. Therefore, we do not adopt a mercury beyond-the-floor standard based on limiting feedrate of mercury in hazardous waste.

Thus, the promulgated mercury standard for new hazardous waste burning cement kilns is the floor emissions level of 56 µg/dscm.

4. What Are the Particulate Matter Standards?

We establish standards for both existing and new cement kilns which limit particulate matter emissions to 0.15 kg/Mg dry feed.[128] In addition, opacity cannot exceed 20 percent. We chose the particulate matter standard as a surrogate control for the metals antimony, cobalt, manganese, nickel, and selenium. We refer to these five metals as "nonenumerated metals" because standards specific to each metal have not been established. The rationale for adopting these standards is discussed below.

a. What Is the MACT Floor for Existing Sources? In the April 1996 proposal, we discussed particulate matter floor control based upon the performance of a fabric filter with an air-to-cloth ratio of 2.3 acfm/f, [2] resulting in a nominal floor emission level of 0.065 gr/dscf. However, we believed it more appropriate to establish the floor standard based on the cement kiln 1971 New Source Performance Standard. (See discussion in 61 FR at 17392.) The 1971 New Source Performance Standard is 0.15 kg/Mg dry feed (0.30 lb/ton of dry feed). (see 40 CFR 60.60.) Cement kilns currently achieve this standard with well-designed and properly operated electrostatic precipitators and fabric filters.

In the May 1997 NODA, we considered two data analysis methods to identify the particulate matter floor emission level. The first method established and expressed the floor level equivalent to the existing New Source Performance Standard promulgated in 1971. We subsequently proposed and finalized this approach for nonhazardous waste burning cement kilns. See 63 FR at 14198–199 and 64 FR 31898, respectively. The second approach discussed expressed the New Source Performance Standard as a stack gas concentration limit, as opposed to a production-based emission limit format. The May 1997 reevaluation suggested that the 1971 New Source Performance Standard was approximately equivalent to a particulate matter concentration of 0.03 gr/dscf (69 mg/dscm).[129] We indicated a preference for expressing the particulate matter standard on a concentration basis because we also proposed that sources would comply with the particulate matter standard with a particulate matter continuous emissions monitoring system.

However, we now conclude that basing the floor on the 1971 New Source Performance Standard is the most appropriate approach. Cement kilns achieve the 1971 New Source Performance Standard with well-designed and properly operated fabric filters and electrostatic precipitators. Since approximately 20% of hazardous waste burning cement kilns now are subject to the 1971 New Source Performance Standard, consideration of this existing federal regulation as a floor is appropriate because greater than 12% of existing sources are achieving it. The available emissions test data show a wide range of particulate matter results—some emissions data are well below while other data are at the 1971 New Source Performance Standard level.[130] Even though the hazardous waste burning cement kiln particulate matter data span two orders of magnitude,[131] we have limited data on design parameters of the particulate matter control device and could not identify a cause (i.e., differentiate among control equipment) for the wide range in particulate matter emissions. We thus believe that the variation reflects normal operating variability. Therefore, the MACT floor emission level for existing cement kilns is the 1971 New Source Performance Standard.

The New Source Performance Standard at § 60.62 also specifies that opacity must be monitored continuously and establishes an opacity standard of 20 percent as a measure to ensure compliance with the particulate matter standard. We are therefore also adopting this opacity standard for today's rule.[132] We are adopting it for the final rule because: (1) We proposed to base the particulate matter standard for hazardous waste burning cement kilns on the New Source Performance Standard, and the opacity standard is an integral component of that standard; and (2) we proposed to base the MACT particulate matter standard for nonhazardous waste burning cement kilns on the New Source Performance Standard and explicitly identified both the particulate emission and opacity components of the standard. Hazardous waste burning cement kiln stakeholders have commented on both the nonhazardous waste and hazardous waste cement kiln proposed rules and suggest that there is little or no difference in emissions from the two classes of kilns and that they should be regulated the same. Although we do not agree that emissions of all hazardous pollutants are the same for both classes of kilns and should be regulated the same, we agree that particulate

[127] Achieving substantial additional mercury emissions reductions by further controls on hazardous waste feedrate may be problematic because the mercury contribution from raw materials and coal represents an even larger proportion of the total mercury fed to the kiln.

[128] Approximately equivalent to a particulate matter concentration of 0.03 gr/dscf (69 mg/dscm) as expressed in the April 1996 NPRM and May 1997 NODA. The calculation is approximate due to the different types of cement kilns and their associated flow rates.

[129] See USEPA, "Final Technical Support Document for HWC MACT Standards, Volume III: Selection of MACT Standards and Technologies," July 1999 for a discussion of the approximate equivalency.

[130] The variation in the particulate matter data is consistent with data from nonhazardous waste burning cement kilns. We neither expect nor have any data indicating that waste-burning operations increase particulate matter emissions at a cement kiln. An estimated 30% of existing nonhazardous waste burning cement kilns are subject to the requirements of the new Source Performance Standard for cement plants. The particulate matter data for these kilns also exhibit a wide range in measurements. (63 FR at 14198.)

[131] USEPA, "Final Technical Support Document for HWC MACT Standards, Volume III: Selection of MACT Standards and Technologies," July 1999.

[132] Given that we adopt the New Source Performance Standard for particulate matter and opacity for the MACT standards for hazardous waste burning cement kilns, we exempt these sources from the New Source Performance Standard to avoid duplicative regulation. See § 63.1204(h).

injection; however, an evaluation was not conducted to determine if such a level would be cost-effective. (62 FR at 24227.)

In developing the final rule, we identified three techniques for control of mercury as a basis to evaluate a beyond-the-floor standard: (1) Activated carbon injection; (2) limiting the feed of mercury in the hazardous waste; and (3) limiting the feed of mercury in the raw materials. The results of each analysis are discussed below.

i. Activated Carbon Injection. To investigate activated carbon injection, we applied a carbon injection capture efficiency of 80 percent to the floor emission level of 120 μg/dscm. Our basis for selecting a capture efficiency of 80 percent [124] is discussed in the support document.[125] The resulting beyond-the-floor emission level is 25 μg/dscm.

We then determined the cost of achieving this reduction to determine if a beyond-the-floor standard of 25 μg/dscm would be appropriate. The national incremental annualized compliance cost for the remaining cement kilns to meet this beyond-the-floor level, rather than comply with the floor controls, would be approximately $11.1 million for the entire hazardous waste burning cement kiln industry and would provide an incremental reduction in mercury emissions nationally beyond the MACT floor controls of 0.7 Mg/yr. Based on these costs of approximately $16 million per additional Mg of mercury removed, we conclude that this mercury beyond-the-floor option for cement kilns is not acceptably cost-effective nor otherwise justified. Therefore, we do not adopt this beyond-the-floor standard.

ii. Limiting the Feedrate of Mercury in the Hazardous Waste. We also considered a beyond-the-floor standard of 50 μg/dscm based on limiting the feedrate of mercury in the hazardous waste. An emission level of 50 μg/dscm represents the practicable extent that additional feedrate control of mercury in hazardous waste (beyond feedrate control needed to achieve the floor emission level) can be used and still achieve modest emissions reductions. We investigated the cost of achieving this reduction to determine if this beyond-the-floor standard would be appropriate. The national incremental annualized compliance cost for cement kilns to meet a beyond-the-floor level of 50 μg/dscm, rather than comply with the floor controls, would be approximately $4.2 million for the entire hazardous waste burning cement kiln industry and would provide an incremental reduction in mercury emissions nationally beyond the MACT floor controls of 0.4 Mg/yr. Based on these costs of approximately $10.9 million per additional Mg of mercury removed, we conclude that this mercury beyond-the-floor option for cement kilns is not warranted. Therefore, we did not adopt this mercury beyond-the-floor standard.

iii. Limiting the Feedrate of Mercury in Raw Materials. Finally, we considered a beyond-the-floor standard based on limiting the feedrate of mercury in the raw materials. Cement manufacturing involves the heating of raw materials such as limestone, clay, shale, sand, and iron ore. Limestone, shale, and clay comprise the vast majority of raw material feed to the kiln, and these materials are typically mined at quarries nearby the cement kiln. Since feed materials can contain significant quantities of hazardous air pollutants, we considered establishing a beyond-the-floor standard based on limiting the feedrate of mercury in these raw materials. A source can achieve a reduction in mercury emissions by substituting a feed material containing lower levels of mercury for a primary raw material with higher mercury levels. For example, shale is the primary feed material used as a source of silica. Under this beyond-the-floor option, a source using a high mercury-containing shale could substitute a feed material lower in mercury such as a coal ash to achieve lower mercury emissions. This beyond-the-floor option appears to be less cost-effective compared to either of the options evaluated above, however. This conclusion is based on the fact that cement kilns are sited proximate to primary raw material supply and transporting large quantities of an alternative source of raw material(s) is likely to be cost-prohibitive, thereby making a beyond-the-floor standard not cost-effective. Therefore, we do not adopt this mercury beyond-the-floor standard.

Thus, the promulgated mercury standard for existing hazardous waste burning cement kilns is the floor level of 120 μg/dscm.

c. What Is the MACT Floor for New Sources? In the April 1996 proposal, we identified floor control for new sources as hazardous waste mercury feedrate control not to exceed a feedrate level of 28 μg/dscm expressed as a maximum theoretical emission concentration. We proposed a floor level of 82 μg/dscm. We discussed a floor emission level for new cement kilns in the May 1997 NODA of 72 μg/dscm, based on a floor feedrate control level of 110 μg/dscm.

Today we identify floor control for new cement kilns as feedrate control of mercury in the hazardous waste, expressed as a maximum theoretical emission concentration, based on the single source with the best aggregate feedrate of mercury in hazardous waste. Using the aggregate feedrate approach to establish this floor level of control and the corresponding floor emission level, we identify a MACT floor emission level of 56 μg/dscm for new hazardous waste burning cement kilns.[126]

d. What Are Our Beyond-the-Floor Considerations for New Sources? At proposal, we based beyond-the-floor control for new cement kilns on activated carbon injection and proposed a standard of 50 μg/dscm. In the May 1997 NODA we considered a beyond-the-floor standard of 30 μg/dscm based on activated carbon injection as done for existing sources.

We identified two techniques for control of mercury as a basis to evaluate a beyond-the-floor standard for new sources: (1) Activated carbon injection; and (2) limiting the feedrate of mercury in the hazardous waste. The results of each analysis are discussed below.

i. Activated Carbon Injection. As discussed above, we conclude that flue gas temperature reduction to 400°F followed by activated carbon injection to remove mercury is an appropriate beyond-the-floor control option for improved mercury control at cement kilns. Based on the MACT floor emission level of 56 μg/dscm and assuming a carbon injection capture efficiency of 80 percent, we identified a beyond-the-floor emission level of 10 μg/dscm. We then determined the cost of achieving this reduction to determine if a beyond-the-floor standard of 10 μg/dscm would be appropriate. The incremental annualized compliance cost for one new large cement kiln to meet this beyond-the-floor level, rather than comply with floor controls, would be approximately $2.3 million and would provide an incremental reduction in mercury emissions beyond the MACT floor controls of approximately 0.17 Mg/yr. For a new small cement kiln, the

[124] We received many comments on the use of activated carbon injection as a beyond-the-floor control technique at cement kilns. Since we do not adopt a beyond-the-floor standard based on activated carbon injection in the final rule, these comments and our responses to them are only discussed in our document that responds to public comments.

[125] USEPA, "Final Technical Support Document for HWC MACT Standards, Volume III: Selection of MACT Standards and Technologies," July 1999.

[126] Given that the emission level is substantially higher than the feedrate level expressed as a maximum theoretical emission concentration, 56 vs 7 μg/dscm, the contributions of mercury from raw materials and coal for the floor-setting source must be substantial.

97% since 1990, from 431 g TEQ/yr to 13.1 g TEQ/yr.[123]

c. What Is the MACT Floor for New Sources? At proposal, we identified floor control for new sources as temperature control at the inlet to the particulate matter control device at 409°F. The proposed floor emission level was 0.20 ng TEQ/dscm, or temperature at the inlet to the particulate matter control device not to exceed 409°F. In the May 1997 NODA, we identified an alternative data analysis method to identify floor control and the floor emission level. The May 1997 NODA dioxin/furan floor control for new sources was defined as temperature control at the inlet to the electrostatic precipitator or fabric filter at 400°F, which was based on an engineering evaluation of the emissions data and other available information. That analysis resulted in a floor emission level of 0.20 ng TEQ/dscm, or 0.40 ng TEQ/dscm and temperature at the inlet to the electrostatic precipitator or fabric filter not to exceed 400°F. We continue to believe that the floor methodology is appropriate for new sources and we adopt this approach in this final rule.

d. What Are Our Beyond-the-Floor Considerations for New Sources? In both the April 1996 proposal and May 1997 NODA, we proposed activated carbon injection as beyond-the-floor control and a beyond-the-floor standard of 0.20 ng TEQ/dscm for new sources. For reasons discussed above for existing sources, we conclude that it is also not cost-effective for new cement kilns to achieve this level. Thus, we do not adopt a beyond-the-floor dioxin/furan standard for new cement kilns.

3. What Are the Mercury Standards?

In today's rule, we establish a standard for existing and new cement kilns that limits mercury emissions to 120 and 56 µg/dscm, respectively. The rationale for these standards is discussed below.

a. What Is the MACT Floor for Existing Sources? All cement kilns use either electrostatic precipitators or fabric filters for particulate matter control. However, since mercury is generally in the vapor form in and downstream of the combustion chamber, including the air pollution control device, electrostatic precipitators and fabric filters do not achieve good mercury control. Mercury emissions from cement kilns are currently regulated by the Boiler and Industrial Furnace rule, which establishes limits on the maximum feedrate of mercury in total feedstreams (e.g., hazardous waste, raw materials, coal). Thus, MACT floor control is based on hazardous waste feed control.

In the April 1996 proposal, we identified floor control as hazardous waste feedrate control not to exceed a feedrate level of 110 µg/dscm, expressed as a maximum theoretical emission concentration, and proposed a floor standard of 130 µg/dscm based on an analysis of data from all cement kilns with a hazardous waste mercury feedrate of this level or lower. (61 FR at 17393.) In May 1997 NODA, we conducted a breakpoint analysis on low to high ranked mercury emissions data from sources floor control and established the floor level as the test condition average emission of the breakpoint source. The breakpoint analysis was intended to reflect an engineering-based evaluation of the data so that the few cement kilns spiking mercury during compliance testing did not drive the floor standard to levels higher than the preponderance of the emissions data. We reasoned that sources with emissions higher than the breakpoint source were not controlling the hazardous waste feedrate of mercury to levels representative of MACT. This analysis resulted in a MACT floor level of 72 µg/dscm. (62 FR at 24227.)

For today's rule, in response to comments questioning our May 1997 NODA approach, we use a revised engineering evaluation and data analysis method to establish the MACT floor for mercury. As discussed in greater detail in the methodology section previously, we use an aggregate feedrate approach to establish MACT floors for the three metal hazardous air pollutant groups and hydrochloric acid/chlorine gas. The aggregate feedrate approach first identifies a MACT floor feedrate level for mercury and then establishes the floor emission level as the highest emissions level achieved by any cement kilns using floor control or better. Using this approach, the resulting mercury floor emission level is 120 µg/dscm.

We received comments on several overarching issues including the appropriateness of considering feedrate control of mercury in hazardous waste as a MACT floor control technique and the specific procedure of identifying breakpoints in arrayed emissions data. These issues and our response to them are discussed in the floor methodology section in Part Four, Section V. In addition, we received comment on a special provision that would allow cement kilns (and lightweight aggregate kilns) to petition the Administrator for an alternative mercury standard for kilns with mercury concentrations in their mineral and related process raw materials that causes an exceedance of the emission standard. This issue and the alternative standard promulgated in the final rule is fully discussed in Part Five, Section X.A.

We also received comments from the cement manufacturing industry indicating that cement kilns with in-line raw mills have unique design and operating procedures that necessitate the use of emission averaging when demonstrating compliance with the emission standards. These commenters stated that the mercury standard is not achievable without a procedure for kilns to emissions average. The commenters supported a provision allowing cement kilns with in-line raw mills to demonstrate compliance with the emission standards on a time-weighted average basis to account for different emission characteristics when the raw mill is active as opposed to when it is inactive. After fully considering comments received, we adopt an emission averaging provision in the final rule. This provision is fully discussed in Part Five, Section X.E.

Several commenters expressed concern that the mercury emissions data base for cement kilns is comprised of normal data, that is, cement kilns did not spike mercury during RCRA compliance testing as they did for other metals and chlorine. Thus, commenters stated that an emissions variability factor should be added to a floor level derived directly from the emissions data to ensure that the floor emission level is being achieved in practice. As discussed in Section V.D.1 above, we conclude that emissions variability is adequately accounted for by the MACT floor methodology finalized today.

We estimate that 85 percent of cement kilns currently meet the floor level. The national annualized compliance cost for cement kilns to reduce mercury emissions to comply with the floor level is $1.1 million for the entire hazardous waste burning cement industry and will reduce mercury emissions by 0.2 Mg/yr or 15 percent from current baseline emissions.

b. What Are Our Beyond-the-Floor Considerations for Existing Sources? In the April 1996 NPRM, we proposed a beyond-the-floor standard of 50 µg/dscm based on flue gas temperature reduction to 400 °F followed by activated carbon injection for mercury capture. (61 FR at 17394.) In the May 1997 NODA, we considered a beyond-the-floor standard of 30 µg/dscm based on activated carbon

[123] USEPA, "Final Technical Support Document for HWC MACT Standards, Volume V: Emission Estimates and Engineering Costs", July 1999. See also 63 FR 17338, April 10, 1998.

reasonable values that could have been selected considering that: (1) The optimum temperature window for surface-catalyzed dioxin/furan formation is approximately 450–750°F; and (2) temperature levels below 350°F can cause dew point condensation problems resulting in particulate matter control device corrosion, filter cake cementing problems, increased dust handling problems, and reduced performance of the control device. (62 FR at 24226.)

Several commenters disagreed with our selection of 400°F as the particulate matter control device temperature limitation and stated that other higher temperature limitations were equally appropriate as MACT floor control. Based on these NODA comments, we considered selecting a temperature limitation of 450°F, generally regarded to be the lower end of the temperature range of optimum dioxin/furan formation. However, available data indicate that dioxin/furan formation can be accelerated at kilns operating their particulate matter control device at temperatures between 400–450°F. Data from several kilns show dioxin/furan emissions as high as 1.76 ng TEQ/dscm when operating in the range of 400–450°F. Identifying a higher temperature limit such as 450°F is not consistent with other sources achieving much lower emissions at 400°F, and thus identifying a higher temperature limit would not be MACT floor control.

Some commenters also state that EPA has failed to demonstrate that the best performing 12 percent of existing sources currently use temperature control to reduce dioxin/furan emissions, and therefore, temperature control is more appropriately considered in subsequent beyond-the-floor analyses. However, particulate matter control device operating temperatures associated with the emissions data used to establish the dioxin/furan standard are based on the maximum operating limits set during compliance certification testing required by the Boiler and Industrial Furnace rule. See 40 CFR 266.103(c)(1)(viii). As such, cement kilns currently must comply with these temperature limits on a continuous basis during day-to-day operations, and therefore, these temperature limits are properly assessed during an analysis of MACT floors.

Several commenters also oppose consideration of dioxin/furan emissions data from nonhazardous waste burning cement kilns in establishing the floor standard. Commenters state that pooling the available emissions data from hazardous waste burning cement kiln with data from nonhazardous waste burning cement kilns to determine the MACT floor violates the separate category approach that EPA decided upon for the two classes of cement kilns. Notwithstanding our decision to divide the Portland cement manufacturing source category based on the kiln's hazardous waste burning status, we considered both hazardous waste burning cement kiln and nonhazardous waste burning cement kiln data together because both data sets are adequately representative of general dioxin/furan behavior and control in either type of kiln. This similarity is based on our engineering judgement that hazardous waste burning does not have an impact on dioxin/furan formation, dioxin/furan is formed post-combustion. Though the highest dioxin/furan emissions data point from MACT (*i.e.*, operating control device less than 400°F) hazardous waste and nonhazardous waste burning cement kiln sources varies somewhat (0.28 vs 0.37 ng TEQ/dscm respectively), it is our judgment that additional emissions data, irrespective of hazardous waste burning status, would continue to point to a floor of within the range of 0.28 to 0.37 ng TEQ/dscm. This approach ensures that the floor levels for hazardous waste burning cement kilns are based on the maximum amount of relevant data, thereby ensuring that our judgment on what floor level is achievable is as comprehensive as possible.

We estimate that approximately 70 percent of test condition data from hazardous waste burning cement kilns are currently emitting less than 0.40 ng TEQ/dscm (irrespective of the inlet temperature to the particulate matter control device). In addition, approximately 50 percent of all test condition data are less than 0.20 ng TEQ/dscm. The national annualized compliance cost for cement kilns to reduce dioxin/furan emissions to comply with the floor standard is $4.8 million for the entire hazardous waste burning cement industry and will reduce dioxin/furan emissions by 5.4 g TEQ/yr or 40 percent from current baseline emissions.

b. What Are Our Beyond-the-Floor Considerations for Existing Sources? We considered in the April 1996 proposal and May 1997 NODA a beyond-the-floor standard of 0.20 ng TEQ/dscm based on activated carbon injection at a temperature of less than 400°F. We continue to believe that a beyond-the-floor standard 0.20 ng TEQ/dscm based on activated carbon injection is the appropriate beyond-the-floor standard to evaluate given the risks posed by dioxin/furan emissions.

Carbon injection is routinely effective at removing 99 percent of dioxin/furans for numerous municipal waste combustor and mixed waste incinerator applications and one hazardous waste incinerator application. However, currently no hazardous waste burning cement kilns use activated carbon injection for dioxin/furan removal. For cement kilns, we believe that it is conservative to assume only 95 percent is achievable given that the floor level is already low at 0.40 ng/dscm. As dioxin/furans decrease, activated carbon injection efficiency is expected to decrease. In addition, we assumed for cost-effectiveness calculations that cement kilns needing activated carbon injection to achieve the beyond-the-floor standard would install the activated carbon injection system after the normal particulate matter control device and add a new, smaller fabric filter to remove the injected carbon with the absorbed dioxin/furan and mercury.[122] The costing approach addresses commenter's concerns that injected carbon may interfere with cement kiln dust recycling practices.

The national incremental annualized compliance cost for the remaining cement kilns to meet this beyond-the-floor level, rather than comply with the floor controls, would be approximately $2.5 million for the entire hazardous waste burning cement industry and would provide an incremental reduction in dioxin/furan emissions nationally beyond the MACT floor controls of 3.7 g TEQ/yr. Based on these costs, approximately $0.66 million per g dioxin/furan removed, we determined that this dioxin/furan beyond-the-floor option for cement kilns is not justified. Therefore, we are not adopting a beyond-the-floor standard of 0.2 ng TEQ/dscm.

We note that one possible explanation of high cost-effectiveness of the beyond-the-floor standard may be due to the significant reduction in national dioxin/furan emissions achieved over the past several years by hazardous waste burning cement kilns due to emissions improving modifications. The hazardous waste burning cement kiln national dioxin/furan emissions estimate for 1997 decreased by nearly

[122] We received many comments on the use of activated carbon injection as a beyond-the-floor control techniques at cement kilns. Since we do not adopt a beyond-the-floor standard based on activated carbon injection in the final rule, these comments and our responses to them are only discussed in our document that responds to public comments.

STANDARDS FOR EXISTING AND NEW CEMENT KILNS

Hazardous air pollutant or hazardous air pollutant surrogate	Emissions standard [1]	
	Existing sources	New sources
Dioxin and furan	0.20 ng TEQ/dscm; or 0.40 ng TEQ/dscm and control of flue gas temperature not to exceed 400°F at the inlet to the particulate matter control device.	0.20 ng TEQ/dscm; or 0.40 ng TEQ/dscm and control of flue gas temperature not to exceed 400°F at the inlet to the particulate matter control device.
Mercury	120 µg/dscm	56 µg/dscm.
Particulate matter [2]	0.15 kg/Mg dry feed and 20% opacity	0.15 kg/Mg dry feed and 20% opacity.
Semivolatile metals	240 µg/dscm	180 µg/dscm.
Low volatile metals	56 µg/dscm	54 µg/dscm.
Hydrochloric acid and chlorine gas	130 ppmv	86 ppmv.
Hydrocarbons: kilns without by-pass [3,6]	20 ppmv (or 100 ppmv carbon monoxide) [3]	Greenfield kilns: 20 ppmv (or 100 ppmv carbon monoxide and 50 ppmv [5] hydrocarbons).
		All others: 20 ppmv (or 100 ppmv carbon monoxide) [3].
Hydrocarbons: kilns with by-pass; main stack [4,6].	No main stack standard	50 ppmv [5].
Hydrocarbons: kilns with by-pass; by-pass duct and stack [3,4,6].	10 ppmv (or 100 ppmv carbon monoxide)	10 ppmv (or 100 ppmv carbon monoxide).
Destruction and removal efficiency	For existing and new sources, 99.99% for each principal organic hazardous constituent (POHC) designated. For sources burning hazardous wastes F020, F021, F022, F023, F026, or F027, 99.9999% for each POHC designated.	

[1] All emission levels are corrected to 7% O_2, dry basis.
[2] If there is an alkali by-pass stack associated with the kiln or in-line kiln raw mill, the combined particulate matter emissions from the kiln or in-line kiln raw mill and the alkali by-pass must be less than the particulate matter emissions standard.
[3] Cement kilns that elect to comply with the carbon monoxide standard must demonstrate compliance with the hydrocarbon standard during the comprehensive performance test.
[4] Measurement made in the by-pass sampling system of any kiln (e.g., alkali by-pass of a preheater and/or precalciner kiln; midkiln sampling system of a long kiln).
[5] Applicable only to newly-constructed cement kilns at greenfield sites (see discussion in Part Four, Section VII.D.9). 50 ppmv standard is a 30-day block average limit. Hydrocarbons reported as propane.
[6] Hourly rolling average. Hydrocarbons are reported as propane.

2. What Are the Dioxin and Furan Standards?

In today's rule, we establish a standard for new and existing cement kilns that limits dioxin/furan emissions to either 0.20 ng TEQ/dscm; or 0.40 ng TEQ/dscm and temperature at the inlet to the particulate matter control device not to exceed 400°F.[120] Our rationale for these standards is discussed below.

a. What Is the MACT Floor for Existing Sources? In the April 1996 proposal, we identified floor control as either temperature control at the inlet to the particulate matter control device of less than 418°F, or achieving a specific level of dioxin/furan emissions based upon levels achievable using proper temperature control. (61 FR at 17391.) The proposed floor emission level was 0.20 ng TEQ/dscm, or temperature at the inlet to the electrostatic precipitator or fabric filter not to exceed 418°F. In the May 1997 NODA, we identified an alternative data analysis method to identify floor control and the floor emission level. Floor control for dioxin/furan was defined as temperature control at the inlet to the electrostatic precipitator or fabric filter at 400°F, which was based on further engineering evaluation of the emissions data and other available information. That analysis resulted in a floor emission level of 0.20 ng TEQ/dscm, or 0.40 ng TEQ/dscm and temperature at the inlet to the electrostatic precipitator or fabric filter not to exceed 400°F. (62 FR at 24226.) The 0.40 ng TEQ/dscm standard is the level that all cement kilns, including data from nonhazardous waste burning cement kilns, are achieving when operating at the MACT floor control level or better. We considered a data set that included dioxin/furan emissions from nonhazardous waste burning cement kilns because these data are adequately representative of general dioxin/furan behavior and control in either type of kiln. The impacts of hazardous waste constituents (HAPs) on the emissions of those HAPs prevent us from expanding our database for other HAPs in a similar way.

We conclude that the floor methodology discussed in the May 1997 NODA is appropriate and we adopt this approach in today's final rule. We identified two technologies for control of dioxin/furan emissions from cement kilns in the May 1997 NODA. The first technology achieves low dioxin/furan emissions by quenching kiln gas temperatures at the exit of the kiln so that gas temperatures at the inlet to the particulate matter control device are below the temperature range of optimum dioxin/furan formation. For example, we are aware of several cement kilns that have recently added flue gas quenching units upstream of the particulate matter control device to reduce the inlet particulate matter control device temperature resulting in significantly reduced dioxin/furan levels.[121] The other technology is activated carbon injected into the kiln exhaust gas. Since activated carbon injection is not currently used by any hazardous waste burning cement kilns, this technology was evaluated only as part of a beyond-the-floor analysis.

As discussed in the May 1997 NODA, specifying a temperature limitation of 400°F or lower is appropriate for floor control because, from an engineering perspective, it is within the range of

[120] The temperature limit applies at the inlet to a dry particulate matter control device that suspends particulate matter in the combustion gas stream (e.g., electrostatic precipitator, fabric filter) such that surface-catalyzed formation of dioxin/furan is enhanced. The temperature limit does not apply to a cyclone control device, for example.

[121] USEPA, "Final Technical Support Document for HWC MACT Standards, Volume III: Selection of Proposed MACT Standards and Technologies", July 1999. See Section 3.2.1.

floor hydrocarbon emission level of 50 ppmv at nonhazardous waste burning Portland cement kilns because it is being consistently achieved during thirty-day block averaging periods when high hydrocarbon content raw materials are avoided. We have since promulgated a standard of 50 ppmv for hydrocarbons for new nonhazardous waste burning cement kilns. 64 FR 31898.

We now conclude for the same reasons that site selection is floor control for new source, greenfield hazardous waste burning cement kilns [147] and that the floor hydrocarbon emission level is 50 ppmv.[148] Sources must document compliance with this standard for each thirty-day block period of operation. We reconcile this hydrocarbon floor level of 50 ppmv with the floor levels discussed above of 20 ppmv hydrocarbons or 100 ppmv carbon monoxide by establishing the floor as follows. For new source greenfield kilns, the floor is either: (1) 20 ppmv hydrocarbons; or (2) 100 ppmv carbon monoxide and 50 ppmv hydrocarbons. For other new sources not located at greenfield sites, the floor is either 20 ppmv hydrocarbons or 100 ppmv carbon monoxide, which is identical to the standards for existing sources.

The combined 20 ppmv hydrocarbon and 100 ppmv carbon monoxide standards control organic hazardous air pollutant emissions that originate from the incomplete combustion of hazardous waste. The 50 ppmv hydrocarbon standard for new greenfield kilns controls organic hazardous air pollutant emissions that originate from the raw material. We conclude that the 50 ppmv hydrocarbon standard is necessary to deter new kilns from siting at locations that have on-site raw material that is high in organic content, since siting a cement kiln at such a location could result in elevated hydrocarbon emissions.

We considered whether new greenfield kilns would be required to monitor hydrocarbons continuously, or just document compliance with the 50 ppmv limit during the comprehensive performance test. We determined that hydrocarbons must be continuously monitored because compliance with the 100 ppmv carbon monoxide limit may not always ensure compliance with the 50 ppmv hydrocarbon limit. This is because hydrocarbons could potentially evolve from raw materials in the upper drying zone end of the kiln under conditions that inhibit sufficient oxidation of the hydrocarbons to form carbon monoxide.

As with existing sources, we are requiring new sources that elect to continuously comply with the carbon monoxide standard, and new greenfield sources that elect to comply with the carbon monoxide and 50 ppmv hydrocarbon standard, to also demonstrate compliance with the 20 ppmv hydrocarbon standard during the comprehensive performance test. Consistent with this principle, incinerators and lightweight aggregate kilns are also required to demonstrate compliance with the hydrocarbon standard during the comprehensive performance test if they elect to comply with the carbon monoxide standard.

d. What Are Our Beyond-the-Floor Considerations for New Sources? In the April 1996 proposal, we identified beyond-the-floor emission levels for carbon monoxide and hydrocarbon of 50 ppmv and 6 ppmv, respectively, for new sources. (See 61 FR at 17401.) These beyond-the-floor levels were based on the use of a combustion gas afterburner. We indicated in the proposal, however, that beyond-the-floor control was not practical since none of the kilns in our data base are achieving these emission levels, and because of the high costs to retrofit kilns with an afterburner. We reiterated in the May 1997 NODA that a beyond-the-floor standard based on use of an afterburner would not be cost-effective.

One commenter supported these beyond-the-floor standards for new sources, but did not explain why these were considered to be appropriate standards. As discussed above for existing sources, we continue to believe that a beyond-the-floor standard based on use of an afterburner would not be cost-effective.

In summary, we adopt the floor levels as standards for new sources. For new source greenfield kilns, the standard monitored continuously is either: (1) 20 ppmv hydrocarbons; or (2) 100 ppmv carbon monoxide and 50 ppmv hydrocarbons. For other new source kilns, the standard is either 20 ppmv hydrocarbons or 100 ppmv carbon monoxide monitored continuously. New sources that elect to comply with the carbon monoxide standard, and new greenfield sources that elect to comply with the carbon monoxide and 50 ppmv hydrocarbon standard, must also demonstrate compliance with the 20 ppmv hydrocarbon standard, but only during the comprehensive performance test.

9. What Are the Carbon Monoxide and Hydrocarbon Standards for Kilns With By-Pass Sampling Systems? [149]

See § 63.1204(a)(5) and (b)(5).

We establish carbon monoxide and hydrocarbon standards for existing and new cement kilns with by-pass sampling systems as surrogates to control emissions of nondioxin organic hazardous air pollutants.[150] Existing kilns are required to comply with either a carbon monoxide standard of 100 ppmv or a hydrocarbon standard of 10 ppmv on an hourly rolling average basis. Both standards apply to combustion gas sampled in the by-pass or a midkiln sampling port that samples representative kiln gas. Sources that elect to comply with the carbon monoxide standard, however, must also document compliance with the hydrocarbon standard during the comprehensive performance test.[151] See Part Four, Section IV.B of the preamble for the rationale for this requirement.

New kilns are subject to the same by-pass gas carbon monoxide and hydrocarbon standards as existing sources. But, new, greenfield [152] kilns must also comply with a 50 ppmv hydrocarbon standard continuously monitored in the main stack. Sources must document compliance with this standard for each thirty-day block period of operation.

We discuss the rationale for adopting these standards below.

[147] At least one hazardous waste burning cement kiln in our data base used raw material substitution to control hydrocarbon emissions.

[148] We concluded that this new source hydrocarbon standard of 50 ppms should not apply to new sources that are not located at greenfield sites since these kilns are not capable of using site-selection to control hydrocarbon emissions.

[149] This also includes cement kilns which have midkiln sampling systems. See USEPA, "Final Technical Support Document for Hazardous Waste Combustor MACT Standards, Volume I: Description of Source Categories," July 1999, for further explanation of by-pass and midkiln sampling systems.

[150] As discussed in Part 5, Section X.F, cement kilns equipped with bypass sampling systems that feed hazardous waste at a location other than the end where products are normally discharged and at a location downstream of the bypass sampling location (relative to the combustion gas flow direction) must comply with the 20 ppmv main stack hydrocarbon standard discussed in the previous section in lieu of the bypass gas hydrocarbon standard.

[151] As discussed in Part 5, Section X.F, cement kilns that feed hazardous waste at a location other than the end where products are normally discharged and where fuels are normally fired must comply wit the 10 ppmv hydrocarbon standard (i.e., these sources do not have the option to comply with the carbon monoxide standard).

[152] A greenfield cement kiln is a kiln that commenced construction or reconstruction after April 19, 1996 at a site where no cement kiln previously existed, irrespective of the class of kiln (i.e., nonhazardous waste or hazardous waste burning). A newly constructed or reconstructed cement kiln at an existing site would not be classified as a greenfield cement kiln, and would be subject to the same carbon monoxide and hydrocarbon standards as an existing cement kiln.

a. What Is the MACT Floor for Existing Sources? In the April 1996 proposal, we identified floor carbon monoxide and hydrocarbon emission standards for by-pass gas of 100 ppmv and 6.7 ppmv, respectively. Floor control was good combustion practices. (See 61 FR at 17397.) In the May 1997 NODA, we used an alternative data analysis method to identify a hydrocarbon floor level of 10 ppmv.[153] See 62 FR at 24230. Our decision to use engineering information and principles to set the proposed floor standard was based, in part, on the limited hydrocarbon data in our data base. In addition, we reasoned that the hydrocarbon levels being achieved in an incinerator, (*i.e.*, 10 ppmv) are also being achieved in a cement kiln's by-pass duct.[154]

Some commenters stated that we did not have sufficient hydrocarbon emissions data from cement kilns equipped with by-pass sampling systems to justify a by-pass duct hydrocarbon standard. We disagree and conclude that we have adequate data because the MACT data base includes seven cement kilns that monitored hydrocarbons at the bypass sampling location. These sources are achieving hydrocarbon levels of 10 ppmv or less.[155] The fact that these sources achieve hydrocarbon levels below 10 ppmv supports our use of engineering information and principles to set the floor limit at 10 ppmv.[156]

Many commenters questioned whether cement kilns with by-pass sampling systems should comply with both a hydrocarbon and carbon monoxide standard. Those in favor of requiring cement kilns to comply with both standards wrote that neither carbon monoxide nor hydrocarbons are sufficient surrogates for organic hazardous air pollutant emissions. Commenters also noted that by requiring both a carbon monoxide and hydrocarbon limit, we would achieve appropriate organic hazardous air pollutant emission reductions. Other commenters wrote that continuous compliance with both a hydrocarbon and a carbon monoxide standard would be redundant and unnecessarily costly. We agree with the latter view, in that requiring continuous compliance with both standards for bypass gas is redundant for control of organic emissions from combustion of hazardous waste because, as previously discussed: (1) Hydrocarbon alone is a direct and reliable surrogate for organic hazardous air pollutants; and (2) in most cases, carbon monoxide is a conservative indicator of good combustion conditions and thus good control of organic hazardous air pollutants. However, as discussed earlier, we have concluded that a source must demonstrate compliance with the hydrocarbon standard during the comprehensive performance test if it elects to continuously comply with the carbon monoxide standard to ensure that carbon monoxide is an adequate continuously monitored indicator of combustion efficiency. See discussion in Part Four, Section IV.B of the preamble for more discussion on this issue.

One commenter stated that due to some by-pass gas quenching methods, and the need to correct for moisture and oxygen, it may not be possible to accurately measure hydrocarbons to the level of the proposed standard, i.e., 6.7 ppmv. We disagree with this reasoning because, as explained in the technical support document, cement kiln by-pass hydrocarbon levels should be reasonably achievable and measurable by decreasing the span and increasing the calibration frequency of the hydrocarbon monitor.[157] We also note that a cement kiln has the option to petition the Administrator for alternative monitoring approaches under § 63.8(f) if the source has valid reasons why a total hydrocarbon monitor cannot be used to document compliance.

We conclude that floor control can achieve by-pass gas emission levels of 100 ppmv for carbon monoxide and 10 ppmv for hydrocarbons. As discussed in Part Four, Section IV.B, a source may comply with either standard. If the source elects to comply with the carbon monoxide standard, however, it must also demonstrate compliance with the hydrocarbon standard during comprehensive performance testing.

We estimate that all cement kilns with by-pass sampling systems can currently achieve the carbon monoxide floor of 100 ppmv. We also estimate that approximately 97 percent of cement kilns with by-pass sampling systems meet the hydrocarbon floor level of 10 ppmv. The national annualized compliance cost for cement kilns to comply with the floor level is $37K and hydrocarbon emissions will be reduced by 11 Mg/yr, two percent from current baseline emissions .

b. What Are Our Beyond-the-Floor Considerations for Existing Sources? In the April 1996 proposal, we identified a beyond-the-floor control level for carbon monoxide and hydrocarbons in the main stack of 50 ppmv and 6 ppmv, respectively, based on the use of a combustion gas afterburner. (See 61 FR at 17399.) We indicated in the proposal that this beyond-the-floor level was not practical, however, since none of the kilns currently achieve these emission levels and because of the high costs of retrofitting kilns with an afterburner. We estimate that the annualized cost for each cement kiln to operate afterburners range from three to eight million dollars.[158] We continue to believe that it is not cost-effective based on the high retrofit costs and minimal incremental emissions reductions to adopt these beyond-the-floor standards.

In the April 1996 NPRM, we also considered limiting main stack hydrocarbon emissions to a beyond-the-floor level of 20 ppmv based on the use of a low-organic raw material.[159] This was in addition to floor controls limiting carbon monoxide and/or hydrocarbon levels in the by-pass. See 61 FR at 17398. We considered this beyond-the-floor option to address concerns that: (1) organics desorbed from raw materials may contain hazardous air pollutants, even absent any influence from burning hazardous waste; and, (2) it is reasonable to hypothesize that the chlorine released from burning hazardous waste can react with the organics desorbed from the raw material to form generally more toxic chlorinated hazardous air pollutants. Many commenters supported this approach. For the reasons discussed below, however, we conclude it is not appropriate to adopt this beyond-the-

[153] The proposed hydrocarbon standard of 6.7 ppmv was based on a statistical and breakpoint analysis. Today's final rule, consistent with May 1997 NODA, instead uses engineering information and principles to identify the floor hydrocarbon level of 10 ppmv.

[154] See USEPA, "Final Technical Support Document for Hazardous Waste Combustor MACT Standards, Volume III: Selection of MACT Standards and Technologies," February, 1999.

[155] Four of these kilns have ceased hazardous waste operations, and one of the kilns collected that data during time periods other than Certification of Compliance testing.

[156] We note that we could have elected to establish this 10 ppmv hydrocarbon standard as a beyond-the-floor standard rather than a floor standard.

[157] See USEPA, "Final Technical Support Document for Hazardous Waste Combustor MACT Standards, Volume III: Selection of MACT Standards and Technologies," February, 1999.

[158] See "Final Technical Support Document for Hazardous Waste Combustor MACT Standards, Volume V: Emission Estimates and Engineering Costs", February, 1999.

[159] The definition of floor control for existing cement kilns equipped with by-pass sampling systems does not include the use of low organic raw material. Although we have limited data indicating that some kilns used low organic raw material to control hydrocarbon emissions, there are enough facilities using this method of control to establish it as a floor control for existing sources.

floor hydrocarbon standard for existing sources.

Also, many commenters stated that we should establish a main stack hydrocarbon standard because, as stated above, hazardous waste combustion byproducts from cement kilns, particularly chlorine, can react with organic compounds desorbed from raw materials to form hazardous air pollutants. Commenters believe that an additional main stack hydrocarbon emission standard would limit the emissions of chlorinated organic hazardous air pollutants that are generated due to the interaction of the hazardous waste combustion byproducts and the organics desorbed from the raw material.

We disagree that a main stack hydrocarbon emission limit is an appropriate beyond-the-floor control for existing sources. First, we do not believe it is cost-effective to require an existing kiln to substitute its raw material with an off-site raw material.[160] Cement kilns are sited proximate to the primary raw material supply and transporting large quantities of an alternative source of raw material(s) is likely to be very costly. Second, establishing a main stack hydrocarbon limit for existing sources is likely to be counter-productive in controlling organic hazardous air pollutants. It may compel the operator to avoid the unacceptable costs of importing low organic raw material by increasing back-end kiln temperatures to oxidize organics desorbed from raw material, thus lowering hydrocarbon levels. This increase in temperature may result in increased dioxin formation and is counter to our dioxin control strategy. Third, it is debatable whether there is a strong relationship between chlorine feedrates and chlorinated organic hazardous air pollutant emissions, as is suggested by commenters.[161] Finally, we anticipate that any potential risks associated with the possible formation of these chlorinated hazardous air pollutants at high hydrocarbon emission levels can be adequately addressed in a site-specific risk assessment conducted as part of the RCRA permitting process. This increased potential for emissions of chlorinated hazardous air pollutants is not likely to warrant evaluation via a site-specific risk assessment under RCRA, however, unless main stack hydrocarbon levels are substantially higher than the 20 ppmv limit currently applicable under RCRA for cement kilns not equipped with by-pass systems.

In summary, we adopt the floor levels as standards for carbon monoxide, 100 ppmv, and hydrocarbons, 10 ppmv. As discussed above, a source may comply with either standard. If the source elects to comply with the carbon monoxide standard, however, it must also demonstrate compliance with the hydrocarbon standard during comprehensive performance testing.

c. What Is the MACT Floor for New Sources? In the April 1996 proposal, we identified new source floor standards for carbon monoxide and hydrocarbon emissions in the by-pass of 100 ppmv and 6.7 ppmv, respectively. We identified good combustion practices as floor control. (See 61 FR at 17401.) In the May 1997 NODA, we used an alternative data analyses method, in part, to identify an alternative new source hydrocarbon floor level. (See 62 FR at 24230.) As a result of this analysis and the use of engineering information and principles, we identified a floor hydrocarbon emission level of 10 ppmv in the by-pass for new cement kilns. We continue to believe that the new source hydrocarbon floor methodology discussed in the May 1997 NODA, and the new source carbon monoxide floor methodology discussed in the April 1996 proposal, are appropriate. Therefore, we adopt these floor emission levels for by-pass gas in today's final rule.

We also establish a 50 ppmv hydrocarbon floor level for the main stack of new greenfield kilns. As discussed above (Part Four, Section VII.8.c), we concluded during development of the final rule that some cement kilns are currently controlling their feed material selection, site location, and feed material blending to optimize operations. Because these controls can be used to control hydrocarbon content of the raw material and, thus, hydrocarbon emissions in the main stack, they represent floor control for main stack hydrocarbons for new sources.[162] We established a floor hydrocarbon emission level of 50 ppmv because it is being consistently achieved during thirty-day block averaging periods when high hydrocarbon content raw materials are avoided.

d. What Are Our Beyond-the-Floor Considerations for New Sources? In the April 1996 proposal, we identified main stack beyond-the-floor emission levels for carbon monoxide and hydrocarbon of 50 ppmv and 6 ppmv, respectively, for new sources. (See 61 FR at 17401.) These beyond-the-floor levels were based on the use of a combustion gas afterburner. We indicated in the proposal, however, that beyond-the-floor control was not practical since none of the kilns in our data base are achieving these emission levels, and because of the high costs to retrofit kilns with an afterburner. We reiterated in the May 1997 NODA, that a beyond-the-floor standard based on use of an afterburner would not be cost-effective.

One commenter wrote that we rejected these beyond-the-floor carbon monoxide and hydrocarbon standards without providing any justification. Another commenter supported these beyond-the-floor standards for new sources. As discussed above (in greater detail) for existing sources, we continue to believe that a beyond-the-floor standard based on use of an afterburner would not be cost-effective.

In the April 1996 proposal, we considered limiting main stack hydrocarbon emissions at new sources equipped with by-pass sampling systems to a beyond-the-floor level of 20 ppmv.[163] This addressed concerns that: (1) Organics desorbed from raw materials contain hazardous air pollutants, even absent any influence from burning hazardous waste; and (2) it is reasonable to hypothesize that the chlorine released from burning hazardous waste can react with the organics desorbed from the raw material to form generally more toxic chlorinated hazardous air pollutants. Although not explicitly stated, beyond-the-floor control would have been control of feed material selection, site location, and feed material blending to control the hydrocarbon content of the raw material and, thus, hydrocarbon emissions in the main stack. As discussed above, however, we adopt today a main stack hydrocarbon floor standard of 50 ppmv for newly constructed greenfield cement kilns equipped with by-pass systems. We are not adopting a main stack beyond-the floor hydrocarbon standard of 20 ppmv for these kilns because we

[160] We did not quantify actual costs associated with raw material substitution due to the lack of information.

[161] It is true that some studies have shown a relationship between chlorine levels in the flue gas and the generation of chlorobenzene in cement kiln emissions: the more chlorine, the more chlorobenzene is generated. Some full-scale tests, however, have shown that there is no observable or consistent trend when comparing "baseline" (*i.e.*, nonhazardous waste operation) organic hazardous air pollutant emissions with organic hazardous air pollutant emissions associated with hazardous waste operations, as well as comparing hazardous waste conditions with varying levels of chlorine. See USEPA, "Final Technical Support Document for Hazardous Waste Combustor MACT Standards, Volume III: Selection of MACT Standards and Technologies," July 1999, for further discussion.

[162] At least one hazardous waste burning cement kiln in our data base used raw material substitution to control hydrocarbon emissions.

[163] This was in addition to limiting hydrocarbon and/or carbon monoxide at the by-pass sampling location.

are concerned that it may not be readily achievable using beyond-the-floor control.

In summary, we establish the following standards for new sources based on floor control: (1) By-pass gas emission standards for carbon monoxide and hydrocarbons of 100 ppmv and 10 ppmv, respectively;[164] and (2) a main stack hydrocarbon standard of 50 ppmv at greenfield sites.

10. What Are the Destruction and Removal Efficiency Standards?

We establish a destruction and removal efficiency (DRE) standard for existing and new cement kilns to control emissions of organic hazardous air pollutants other than dioxins and furans. Dioxins and furans are controlled by separate emission standards. See discussion in Part Four, Section IV.A. The DRE standard is necessary, as previously discussed, to complement the carbon monoxide and hydrocarbon emission standards, which also control these hazardous air pollutants.

The standard requires 99.99 percent DRE for each principal organic hazardous constituent (POHC), except that 99.9999 percent DRE is required if specified dioxin-listed hazardous wastes are burned. These wastes are listed as—F020, F021, F022, F023, F026, and F027—RCRA hazardous wastes under part 261 because they contain high concentrations of dioxins.

a. What Is the MACT Floor for Existing Sources? Existing sources are currently subject to DRE standards under § 266.104(a) that require 99.99 percent DRE for each POHC, except that 99.9999 percent DRE is required if specified dioxin-listed hazardous wastes are burned. Accordingly, these standards represent MACT floor. Since all hazardous waste cement kilns are currently subject to these DRE standards, they represent floor control, *i.e.*, greater than 12 percent of existing sources are achieving these controls.

b. What Are Our Beyond-the-Floor Considerations for Existing Sources? Beyond-the-floor control would be a requirement to achieve a higher percentage DRE, for example, 99.9999 percent DRE for POHCs for all hazardous wastes. A higher DRE could be achieved by improving the design, operation, or maintenance of the combustion system to achieve greater combustion efficiency.

Sources will not incur costs to achieve the 99.99% DRE floor because it is an existing RCRA standard . A substantial number of existing hazardous waste combustors are not likely to be routinely achieving 99.999% DRE, however, and most are not likely to be achieving 99.9999% DRE. Improvements in combustion efficiency will be required to meet these beyond-the-floor DREs. Improved combustion efficiency is accomplished through better mixing, higher temperatures, and longer residence times. As a practical matter, most combustors are mixing-limited. Thus, improved mixing is necessary for improved DREs. For a less-than-optimum burner, a certain amount of improvement may typically be accomplished by minor, relatively inexpensive combustor modifications—burner tuning operations such as a change in burner angle or an adjustment of swirl—to enhance mixing on the macro-scale. To achieve higher and higher DREs, however, improved mixing on the micro-scale may be necessary requiring significant, energy intensive and expensive modifications such as burner redesign and higher combustion air pressures. In addition, measurement of such DREs may require increased spiking of POHCs and more sensitive stack sampling and analysis methods at added expense.

Although we have not quantified the cost-effectiveness of a beyond-the-floor DRE standard, we do not believe that it would be cost-effective. For reasons discussed above, we believe that the cost of achieving each successive order-of-magnitude improvement in DRE will be at least constant, and more likely increasing. Emissions reductions diminish substantially, however, with each order of magnitude improvement in DRE. For example, if a source were to emit 100 gm/hr of organic hazardous air pollutants assuming zero DRE, it would emit 10 gm/hr at 90 percent DRE, 1 gm/hr at 99 percent DRE, 0.1 gm/hr at 99.9 percent DRE, 0.01 gm/hr at 99.99 percent DRE, and 0.001 gm/hr at 99.999 percent DRE. If the cost to achieve each order of magnitude improvement in DRE is roughly constant, the cost-effectiveness of DRE decreases with each order of magnitude improvement in DRE. Consequently, we conclude that this relationship between compliance cost and diminished emissions reductions associated with a more stringent DRE standard suggests that a beyond-the-floor standard is not warranted.

c. What Is the MACT Floor for New Sources? The single best controlled source, and all other hazardous waste cement kilns, are subject to the existing RCRA DRE standard under § 266.104(a). Accordingly, we adopt this standard as the MACT floor for new sources.

d. What Are Our Beyond-the-Floor Considerations for New Sources? As discussed above, although we have not quantified the cost-effectiveness of a more stringent DRE standard, diminishing emissions reductions with each order of magnitude improvement in DRE suggests that cost-effectiveness considerations would likely come into play. We conclude that a beyond-the-floor standard is not warranted.

VIII. What Are the Standards for Existing and New Hazardous Waste Burning Lightweight Aggregate Kilns?

A. To Which Lightweight Aggregate Kilns Do Today's Standards Apply?

The standards promulgated today apply to each existing, reconstructed, and newly constructed lightweight aggregate plant where hazardous waste is burned in the kiln. These standards apply to major source and area source lightweight aggregate facilities. Lightweight aggregate kilns that do not engage in hazardous waste burning operations are not subject to this NESHAP; however, these kilns will be subject to future MACT standards for the Clay Products source category.

B. What Are the Standards for New and Existing Hazardous Waste Burning Lightweight Aggregate Kilns?

1. What Are the Standards for Lightweight Aggregate Kilns?

In this section, the basis for the emissions standards for hazardous waste burning lightweight aggregate kilns is discussed. The kiln emission limits apply to the kiln stack gases from lightweight aggregate plants that burn hazardous waste. The emissions standards are summarized below:

[164] A source may comply with either bypass gas standard. If the source elects to comply with the carbon monoxide standard, however, it must also demonstrate compliance with the hydrocarbon standard during comprehensive performance testing.

STANDARDS FOR EXISTING AND NEW LIGHTWEIGHT AGGREGATE KILNS

ous air pollutant or hazardous air pollutant surrogate	Emissions standard [1]	
	Existing sources	New sources
furan	0.20 ng TEQ/dscm; or 0.40 ng TEQ/dscm and rapid quench of the flue gas at the exit of the kiln to less than 400°F.	0.20 ng TEQ/dscm; or 0.40 ng TEQ/dscm and rapid quench of the flue gas at the exit of the kiln to less than 400°F.
	47 µg/dscm	43 µg/dscm.
y	57 mg/dscm (0.025 gr/dscf)	57 mg/dscm (0.025 gr/dscf).
ilate matter	250 µg/dscm	43 µg/dscm.
olatile metals [2]	110 µg/dscm	110 µg/dscm.
olatile metals [3]	230 ppmv	41 ppmv.
chloric acid/chlorine gas	20 ppmv (or 100 ppmv carbon monoxide)	20 ppmv (or 100 ppmv carbon monoxide).
carbons [2,3]	For existing and new sources, 99.99% for each principal organic hazardous constituent (POHC) designated. For sources burning hazardous wastes F020, F021, F022, F023, F026, or F027, 99.9999% for each POHC designated.	
ction and removal efficiency		

l emission levels are corrected to 7% O_2, dry basis.
ourly rolling average. Hydrocarbons are reported as propane.
ightweight aggregate kilns that elect to continuously comply with the carbon monoxide standard must demonstrate compliance with the hyrbon standard of 20 ppmv during the comprehensive performance test.

/hat Are the Dioxin and Furan
ndards?

today's rule, we establish a
ndard for new and existing
tweight aggregate kilns that limits
xin/furan emissions to either 0.20 ng
Q/dscm; or 0.40 ng TEQ/dscm and
id quench of the flue gas at the exit
he kiln to less than 400°F. Our
ionale for adopting these standards is
cussed below.

. What Is the MACT Floor for
isting Sources? In the April 1996
oposal, we had dioxin/furan
issions data from only one
htweight aggregate kiln and pooled
at data with the dioxin/furan data for
zardous waste burning cement kilns
identify the MACT floor emission
vel. We stated that it is appropriate to
mbine the two data sets because they
e adequately representative of general
ioxin/furan behavior and control in
ther type of kiln. Consequently, floor
ontrol and the floor emission level for
ghtweight aggregate kilns were the
ame as for cement kilns. We proposed
floor emission level of 0.20 ng TEQ/
lscm, or temperature at the inlet to the
abric filter not to exceed 418°F. (61 FR
t 17403.)

Several commenters opposed our
roposed approach of pooling the
ightweight aggregate kiln data with the
cement kiln dioxin/furan data for the
MACT floor analysis. In order to
respond to commenter concerns, we
obtained additional dioxin/furan
emissions data from lightweight
aggregate kiln sources. In a MACT
reevaluation discussed in the May 1997
NODA, we presented an alternative data
analysis method to identify floor control
and the floor emission level. In that
NODA, dioxin/furan floor control was
defined as temperature control not to
exceed 400°F at the inlet to the fabric
filter. That analysis resulted in a floor
emission level of 0.20 ng TEQ/dscm, or
4.1 ng TEQ/dscm and temperature at the
inlet to the fabric filter not to exceed
400°F. (62 FR at 24231.) An emission
level of 4.1 ng TEQ/dscm represents the
highest single run from the test
condition with the highest run average.
We concluded that 4.1 ng TEQ/dscm
was a reasonable floor level, from an
engineering perspective, given our
limited dioxin/furan data base for
lightweight aggregate kilns. (We noted
that if this were a large data set, we
would have identified the floor
emission level simply as the highest test
condition average.) Due to variability
among the runs of the test condition
with the highest condition average and
because a floor level of 4.1 ng TEQ/
dscm is 40 percent higher than the
highest test condition average of 2.9 ng
TEQ/dscm lightweight aggregate kilns
using floor control will be able to meet
routinely a floor emission level of 4.1 ng
TEQ/dscm.

We maintain that the floor
methodology discussed in the May 1997
NODA is appropriate and we adopt this
approach in today's rule. In that NODA
we identified two technologies for
control of dioxin/furan emissions from
lightweight aggregate kilns. The first
technology controls dioxin/furans by
quenching kiln gas temperatures at the
exit of the kiln so that gas temperatures
at the inlet to the particulate matter
control device are below the
temperature range of optimum dioxin/
furan formation. The other technology is
activated carbon injected into the kiln
exhaust gas. Because activated carbon
injection is not currently used by any
hazardous waste burning lightweight
aggregate kilns, this technology was
evaluated only as part of a beyond-the-
floor analysis.

One commenter opposes our
approach specifying a MACT floor
control temperature limitation of 400°F
at the particulate matter control device.
Instead, the commenter supports a
temperature limitation of 417°F, which
is the highest temperature associated
with any dioxin/furan test condition in
our data base. Although only two of the
three test conditions for which we have
dioxin/furan emissions data operated
the fabric filter at 400°F or lower (the
third operated at 417°F), we do have
other fabric filter operating temperatures
from kilns performing RCRA
compliance testing for other hazardous
air pollutants that document fabric filter
operations at 400°F or lower. From these
data, we conclude that lightweight
aggregate kilns can operate the fabric
filter at temperatures of 400°F or lower.
Thus, identifying floor control at a
temperature limitation of 400°F ensures
that all lightweight aggregate kilns will
be operating consistent with sound
operational practices for controlling
dioxin/furan emissions.

As discussed in the May 1997 NODA,
specifying a temperature limitation of
400°F or lower is appropriate for floor
control because, from an engineering
perspective, it is within the range of
reasonable values that could have been
selected considering that: (1) The
optimum temperature window for
surface-catalyzed dioxin/furan
formation is approximately 450–750°F;
and (2) temperature levels below 350°F
can cause dew point condensation
problems resulting in particulate matter
control device corrosion. Further,
lightweight aggregate kilns can operate
at air pollution control device
temperatures between 350 to 400°F. In

fact, all lightweight aggregate kilns use (or have available) fabric filter "tempering" air dilution and water quench for cooling kiln exit gases prior to the fabric filter (some kilns also augment this with uninsulated duct radiation cooling). Thus, the capability of operating fabric filters at temperatures lower than 400°F currently exists and is practical. See the technical support document for further discussion.[165]

In summary, today's floor emission level for dioxin/furan emissions for existing lightweight kilns is 0.20 ng TEQ/dscm or 4.1 ng TEQ/dscm and control of temperature at the inlet to the fabric filter not to exceed 400°F. We estimate that all lightweight aggregate kiln sources currently are meeting the floor level.

b. What Are Our Beyond-the-Floor Considerations for Existing Sources? We considered in the April 1996 proposal a beyond-the-floor standard of 0.20 ng TEQ/dscm based on injection of activated carbon at a flue gas temperature of less than 400°F. (61 FR at 17403.) In the May 1997 NODA, we considered a beyond-the-floor standard of 0.20 ng TEQ/dscm standard based on rapidly quenching combustion gases at the exit of the kiln to 400°F, and insulating the duct-work between the kiln exit and the fabric filter to maintain gas temperatures high enough to avoid dew point problems. (62 FR at 24232.)

One commenter, however, disagrees that there is adequate evidence (test data) supporting rapid quench of kiln exit gases to less than 400°F can achieve a level of 0.20 ng TEQ/dscm. Based on these NODA comments and upon closer analysis of all available data, we find that a level of 0.20 ng TEQ/dscm has not been clearly demonstrated for lightweight aggregate kilns with rapid quench less than 400°F prior to the particulate matter control device. The data show that some lightweight aggregate kilns can achieve a level of 0.20 TEQ ng/dscm with rapid quench. In addition, one commenter, who operates two lightweight aggregate kilns with heat exchangers that cool the flue gas to a temperature of approximately 400°F at the fabric filter, stated that they achieve dioxin/furan emissions slightly below 0.20 ng TEQ/dscm. However, because of the small dioxin/furan data base we are concerned that these limited data may not show the full range of emissions. Due to the similarity of dioxin/furan control among cement kilns and lightweight aggregate kilns, we looked to the cement kiln data to complement our limited lightweight aggregate kiln dataset. As discussed earlier, cement kilns are able to control dioxin/furans to 0.40 ng TEQ/dscm with temperature control. Since we do not expect a lightweight aggregate kiln to achieve lower dioxin/furan emissions than a cement kiln with rapid quench, we agree with these commenters and conclude that lightweight aggregate kilns can control dioxin/furans to 0.40 ng TEQ/dscm with rapid quench of kiln exit gases to less than 400°F.

Thus, for the final rule, we considered two beyond-the-floor levels: (1) Either 0.20 ng TEQ/dscm; or 0.40 ng TEQ/dscm and rapid quench of the kiln exhaust gas to a temperature less than 400°F; and (2) a level of 0.20 ng TEQ/dscm based on activated carbon injection.

The first option is a beyond-the-floor standard of either 0.20 ng TEQ/dscm, or 0.40 ng TEQ/dscm and rapid quench of the kiln exhaust gas to less than 400°F. The national incremental annualized compliance cost for lightweight aggregate kilns to meet this beyond-the-floor level rather than comply with the floor controls would be approximately $50,000 for the entire hazardous waste burning lightweight aggregate kiln industry, and would provide an incremental reduction in dioxin/furan emissions beyond the MACT floor controls of nearly 2 g TEQ/yr.

Based on these costs of approximately $25 thousand per additional g of dioxin/furan removed and on the significant reduction in dioxin/furan emissions achieved, we have determined that this dioxin/furan beyond-the-floor option for lightweight aggregate kilns is justified, especially given our special concern about dioxin/furans. Dioxin/furans are some of the most toxic compounds known due to their bioaccumulation potential and wide range of health effects, including carcinogenesis, at exceedingly low doses. Exposure via indirect pathways is a chief reason that Congress singled out dioxin/furans for priority MACT control in section 112(c)(6) of the CAA. See S. Rep. No. 128, 101st Cong. 1st Sess. at 154–155.

We also evaluated, but rejected, activated carbon injection as a beyond-the-floor option. Carbon injection is routinely effective at removing 99 percent of dioxin/furans at numerous municipal waste combustor and medical waste combustor applications and one hazardous waste incinerator application. However, no hazardous waste burning lightweight aggregate kiln currently uses activated carbon injection for dioxin/furan removal. We believe that it is conservative to assume that only 95 percent is achievable given potential uncertainties in its application to lightweight aggregate kilns. In addition, we assumed for cost-effectiveness calculations that lightweight aggregate kilns needing activated carbon injection would install the activated carbon injection system after the existing fabric filter device and add a new smaller fabric filter to remove the injected carbon with the absorbed dioxin/furans and mercury. This costing approach addresses commenter's concerns that injected carbon may interfere with current dust recycling practices.

The national incremental annualized compliance cost for lightweight aggregate kilns to meet a beyond-the-floor level based on activated carbon injection rather than comply with the floor controls would be approximately $1.2 million for the entire hazardous waste burning lightweight aggregate kiln industry. This would provide an incremental reduction in dioxin/furan emissions beyond the MACT floor controls of 2.2 g TEQ/yr, or 90 percent. Based on these costs of approximately $0.53 million per additional g of dioxin/furan removed and the small incremental dioxin/furan emissions reduction beyond the dioxin/furan beyond-the-floor option discussed above (2.0 g TEQ/yr versus 2.2 g TEQ/ yr), we have determined that this second beyond-the-floor option for lightweight aggregate kilns is not justified. Therefore, we are not promulgating a beyond-the-floor standard of 0.20 ng TEQ/dscm for lightweight aggregate kilns based on activated carbon injection.

Thus, the promulgated dioxin/furan standard for existing lightweight aggregate kilns is a beyond-the-floor standard of 0.20 ng TEQ/dscm; or 0.40 ng TEQ/dscm and rapid quench to a temperature not to exceed 400°F based on rapid quench of flue gas at the exit of the kiln.

c. What Is the MACT Floor for New Sources? In the April 1996 proposal, the floor analysis for new lightweight aggregate kilns was the same as for existing kilns, and the proposed standard was the same. The proposed floor emission level was 0.20 ng TEQ/dscm, or temperature at the inlet to the particulate matter control device not to exceed 418°F. (61 FR at 17408.) In the May 1997 NODA, we used an alternative data analysis method to identify floor control and the floor emission level. As done for existing sources, floor control for new sources was defined as temperature control at the inlet to the particulate matter control device to less than 400°F. That

[165] USEPA, "Final Technical Support document for HWC MACT Standards, Volume III: Selection of MACT Standards and Technologies," July 1999.

analysis resulted in a floor emission level of 0.20 ng TEQ/dscm, or 4.1 ng TEQ/dscm and temperature at the inlet to the fabric filter not to exceed 400°F. Our engineering evaluation indicated that the best controlled source is one that is controlling temperature control at the inlet to the fabric filter at 400°F. (62 FR at 24232.) We continue to believe that the floor methodology discussed in the May 1997 NODA is appropriate for new sources and we adopt this approach in the final rule. The floor level for new lightweight aggregate kilns is 0.20 ng TEQ/dscm, or 4.1 ng TEQ/dscm and temperature at the inlet to the particulate matter control device not to exceed 400°F.

d. What Are Our Beyond-the-Floor Considerations for New Sources? In the April 1996 proposal, we proposed activated carbon injection as beyond-the-floor control and a beyond-the-floor standard of 0.20 ng TEQ/dscm. (61 FR at 17408.) In the May 1997 NODA, we identified a beyond-the-floor standard of 0.20 ng TEQ/dscm based on rapid quench of kiln gas to less than 400°F combined with duct insulation or activated carbon injection operated at less than 400°F. (62 FR at 24232.) These beyond-the-floor considerations are identical to those discussed above for existing sources.

The beyond-the-floor standard identified for existing sources continues to be appropriate for new sources for the same reasons. Thus, the promulgated dioxin/furan standard for new lightweight aggregate kilns is the same as the standard for existing standards, i.e., 0.20 ng TEQ/dscm or 0.40 ng TEQ/dscm and rapid quench of the kiln exhaust gas to less than 400°F.

3. What Are the Mercury Standards?

In the final rule, we establish a standard for existing and new lightweight aggregate kilns that limits mercury emissions to 47 and 33 µg/dscm, respectively. The rationale for adopting these standards is discussed below.

a. What Is the MACT Floor for Existing Sources? All lightweight aggregate kilns use fabric filters, and one source uses a venturi scrubber in addition to a fabric filter. However, since mercury is generally in the vapor form in and downstream of the combustion chamber, including in the air pollution control device, fabric filters alone do not achieve significant mercury control. Mercury emissions from lightweight aggregate kilns are currently controlled under existing regulations through limits on the maximum feedrate of mercury in total feedstreams (e.g., hazardous waste, raw materials). Thus, MACT floor control is based on limiting the feedrate of mercury in hazardous waste.

In the April 1996 proposal, we identified floor control as hazardous waste feedrate control not to exceed a feedrate level of 17 µg/dscm, expressed as a maximum theoretical emissions concentration, and proposed a floor emission level of 72 µg/dscm based on an analysis of data from all lightweight aggregate kilns with a hazardous waste feedrate of mercury of this level or lower. (61 FR at 17404.) In the May 1997 NODA, we conducted a breakpoint analysis on ranked mercury emissions data and established the floor emission level equal to the test condition average of the breakpoint source. (62 FR at 24232.) The breakpoint analysis was intended to reflect an engineering-based evaluation of the data whereby the few lightweight aggregate kilns spiking extra mercury during testing procedures did not drive the floor emission level to levels higher than the preponderance of the emission data. We reasoned that sources with emissions higher than the breakpoint source were not controlling the hazardous waste feedrate of mercury to levels representative of MACT. The May 1997 NODA analysis resulted in a MACT floor level of 47 µg/dscm.

One commenter states that the use of mercury stack gas measurements from RCRA compliance test reports is inappropriate for setting the MACT floor since they are based on feeding normal wastes. With the exception of one source, no mercury spiking was done during the RCRA compliance testing because lightweight aggregate kilns complied with Tier I levels allowable in the Boiler and Industrial Furnace rule. The commenter notes that the Tier I allowable levels are above, by orders of magnitude, the total mercury fed into lightweight aggregate kilns. Thus, to set the mercury MACT floor, the commenter states that we need to consider the potential range of mercury levels in the hazardous waste and raw materials, which may not represented by the RCRA compliance stack gas measurements.

We recognize that stack gas tests generating mercury emissions data were conducted with normal unspiked waste streams containing normal levels of mercury in hazardous waste. However, we concluded that it is appropriate in this particular circumstance to use unspiked data to define a MACT floor. See discussion in Part Four, Section V.D.1. It would hardly reflect MACT to base the floor emission level on a feedrate of mercury greater than that which actually occurs in hazardous waste fuels burned in these units. Furthermore, the final rule standard is projected to be achievable by lightweight aggregate kilns for the vast majority of the wastes they are currently handling. The standard would allow lightweight aggregate kilns to burn wastes with about 0.5 ppmw mercury, without use of add-on mercury control techniques such as carbon injection. Data provided by a commenter indicates that approximately 90% of the waste streams lightweight aggregate kilns currently burn do not contain mercury levels at 2 ppmw. Further, the commenter indicates that these wastes are typically less than 0.02 ppmw mercury when more refined and costly analysis techniques are used. Thus, the standard is consistent with the current practice of lightweight aggregate kilns burning low-mercury waste.

We received comments from the lightweight aggregate kiln industry expressing concern with the stringency of the mercury standard. These commenters oppose a mercury standard of 47 µg/dscm, in part, because of the difficulty and increased cost of demonstrating compliance with day-to-day mercury feedrate limits. One potential problem pertains to raw material mercury detection limits. The commenter states that mercury is generally not measured in the raw material at detectable levels at their facilities. The commenter points out that if a kiln assumes mercury is present in the raw material at the detection limit, the resulting calculated uncontrolled mercury emission concentration could exceed, or be a significant percentage of, the mercury emission standard. This may prevent a kiln from complying with the mercury emission standard even though MACT control is used. Further, the commenter anticipates that more frequent analysis, additional laboratory equipment and staff, and improved testing and analysis procedures will be required to show compliance with a standard of 47 µg/dscm. The commenter states that the costs of compliance will increase significantly at each facility to address this nondetect issue.

Four provisions in the final rule offer flexibility in complying with the mercury standard. For example, one provision allows sources to petition for an alternative mercury standard that only requires compliance with a hazardous waste mercury feedrate limitation, provided that mercury not been present historically in the raw material at detectable levels. This approach ensures that kilns using MACT controls can achieve the mercury standard. The details of this provision are discussed in Part Five, Section

X.A.2. Another provision allows kilns a waiver of performance testing requirements when the source feeds low levels of mercury. Under this provision, a kiln qualifies for a waiver of the performance testing requirements for mercury if all mercury from all feedstreams fed to the combustion unit does not exceed the mercury emission standard. For kilns using this waiver, we allow kilns to assume mercury in the raw material is present at one-half the detection limit whenever the raw materials feedstream analysis determines that mercury is not present at detectable levels. The details of this provision are presented in Part Five, Section X.B. For a discussion of the other two methods that can be used to comply with the mercury emission standard, see Part Five, Section VII.B.6.

For today's rule we use a revised engineering evaluation and data analysis method to establish the MACT floor emission level for mercury. The approach used to establish MACT floors for the three metal hazardous air pollutant groups and hydrochloric acid/chlorine gas is the aggregate feedrate approach. Using this approach, the resulting mercury floor emission level is 47 µg/dscm.

We estimate that approximately 75 percent of lightweight aggregate kiln sources currently are meeting the floor emission level. The national annualized compliance cost for lightweight aggregate kilns to reduce mercury emissions to comply with the floor emission level is $0.7 million for the entire hazardous waste burning lightweight aggregate kiln industry, and will reduce mercury emissions by approximately 0.03 Mg/yr or 47 percent from current baseline emissions.

b. What Are Our Beyond-the-Floor Considerations for Existing Sources? In the April 1996 NPRM, we considered a beyond-the-floor standard based on flue gas temperature reduction to 400°F or less followed by activated carbon injection, but determined that a beyond-the-floor level would not be cost-effective and therefore warranted. (61 FR at 17404.) In the May 1997 NODA, we considered a beyond-the-floor standard of 15 µg/dscm based on an activated carbon injection. However, we indicated in the NODA that a beyond-the-floor standard would not likely be justified given the high cost of treatment and the relatively small amount of mercury removed from air emissions. (62 FR at 24232.)

In developing the final rule, we identified three techniques for control of mercury as a basis to evaluate a beyond-the-floor standard: (1) Activated carbon injection; (2) limiting the feed of mercury in the hazardous waste; and (3) limiting the feed of mercury in the raw materials. The results of each analysis are discussed below.

Activated Carbon Injection. To investigate this beyond-the-floor control option, we applied a carbon injection capture efficiency of 80 percent to the floor emission level of 47 µg/dscm. The resulting beyond-the-floor emission level is 10 µg/dscm.

The national incremental annualized compliance cost for lightweight aggregate kilns to meet this beyond-the-floor level rather than comply with the floor controls would be approximately $0.6 million for the entire hazardous waste burning lightweight aggregate kiln industry and would provide an incremental reduction in mercury emissions beyond the MACT floor controls of 0.02 Mg/yr. Based on these costs of approximately $34 million per additional Mg of mercury removed and the small emissions reductions that would be realized, we conclude that this mercury beyond-the-floor option for hazardous waste burning lightweight aggregate kilns is not acceptably cost-effective nor otherwise justified. Therefore, we do not adopt this beyond-the-floor standard.

Limiting the Feedrate of Mercury in Hazardous Waste. We also considered, but rejected, a beyond-the-floor emission level based on limiting the feed of mercury in the hazardous waste. This mercury beyond-the-floor option for lightweight aggregate kilns is not warranted because data submitted by commenters indicate that approximately 90% of the hazardous waste burned by lightweight aggregate kilns contains mercury at levels below method detection limits. We conclude from these data that there are little additional mercury reductions possible by reducing the feed of mercury in the hazardous waste. Therefore, we are not adopting a beyond-the-floor emission level because it will not be cost-effective due to the relatively small amount of mercury removed from air emissions and likely problems with method detection limitations.

Limiting the Feedrate of Mercury in Raw Materials. A source can achieve a reduction in mercury emissions by substituting a feed material containing lower levels of mercury for a primary raw material higher mercury levels. This beyond-the-floor option appears to be less cost effective compared to either of the options evaluated above. Because lightweight aggregate kilns are sited proximate to primary raw material supply and transporting large quantities of an alternative source of raw material(s) is expected to be cost prohibitive. Therefore, we do not adopt this mercury beyond-the-floor standard.

Thus, the promulgated mercury standard for existing hazardous waste burning lightweight aggregate kilns is the floor emission level of 47 µg/dscm.

c. What Is the MACT Floor for New Sources? In the April 1996 proposal, we identified floor control for new sources as hazardous waste feedrate control of mercury not to exceed a feedrate level of 17 µg/dscm expressed as a maximum theoretical emissions concentration. We proposed a floor emission level of 72 µg/dscm. (61 FR at 17408.) In May 1997 NODA, we conducted a breakpoint analysis on ranked mercury emissions data from sources utilizing the MACT floor technology and established the floor emission level as the test condition average of the breakpoint source. The breakpoint analysis was intended to reflect an engineering-based evaluation of the data so that the one lightweight aggregate kiln spiking extra mercury during testing procedures did not drive the floor emission level to levels higher than the preponderance of the emissions data. This analysis resulted in a MACT floor level of 47 µg/dscm. (62 FR at 24233.)

For the final rule, we identify floor control for new lightweight aggregate kilns as feed control of mercury in the hazardous waste, based on the single source with the best aggregate feedrate of mercury in hazardous waste. Using the aggregate feedrate approach to establish this floor level of control and corresponding floor emission level, we identify a MACT floor emission level of 33 µg/dscm for new lightweight aggregate kilns.

d. What Are Our Beyond-the-Floor Considerations for New Sources? In both the proposal and the NODA, we considered a beyond-the-floor standard for new sources based on activated carbon injection, but determined that it would not be cost-effective to adopt the beyond-the-floor standard given the high cost of treatment and the relatively small amount of mercury removed from air emissions. (61 FR at 17408 and 62 FR at 24233.)

In the final rule, we identified three techniques for control of mercury as a basis to evaluate a beyond-the-floor standard: (1) Activated carbon injection; and (2) limiting the feed of mercury in the hazardous waste. The results of each analysis are discussed below.

Activated Carbon Injection. As discussed above, we conclude that flue gas temperature reduction to 400 °F followed by activated carbon injection to remove mercury is an appropriate beyond-the-floor control option for improved mercury control at

lightweight aggregate kilns. The control of flue gas temperature is necessary to ensure good collection efficiency. Based on the MACT floor emission level of 33 µg/dscm and assuming a carbon injection capture efficiency of 80 percent, we identified a beyond-the-floor emission level of 7 µg/dscm. As discussed above for existing sources, we do not believe that a beyond-the-floor standard of 7 µg/dscm is warranted for new lightweight aggregate kilns due to the high cost of treatment and relatively small amount of mercury removed from air emissions. The incremental annualized compliance cost for one new lightweight aggregate kiln to meet this beyond-the-floor level, rather than comply with floor controls, would be approximately $0.46 million and would provide an incremental reduction in mercury emissions beyond the MACT floor controls of approximately 0.008 Mg/yr. Based on these costs of approximately $58 million per additional Mg of mercury removed, a beyond-the-floor standard of 7 µg/dscm is not warranted due to the high cost of compliance and relatively small mercury emissions reductions. Notwithstanding our goal of reducing the loading to the environment by bioaccumulative pollutants such as mercury whenever possible, these costs are not justified.

Limiting the Feedrate of Mercury in Hazardous Waste. As discussed above for existing sources, we conclude that a beyond-the-floor based on limiting the feed of mercury in the hazardous waste is not justified. Considering that the floor emission level for new lightweight aggregate kilns is approximately one third lower than the floor emission level for existing kilns (33 versus 47 µg/dscm), we again conclude that a mercury beyond-the-floor standard is not warranted because emission reductions of mercury would be less than existing sources at comparable costs. Thus, the cost-effectiveness is higher for new kilns than for existing kilns. Further, achieving substantial additional mercury reductions by further controls on hazardous waste feedrate may be problematic because the mercury contribution from raw materials and coal represents an even larger proportion of the total mercury fed to the kiln. Therefore, we do not adopt a mercury beyond-the-floor standard based on limiting feed of mercury in hazardous waste for new sources.

Thus, the promulgated mercury standard for new hazardous waste burning lightweight aggregate kilns is the floor emission level of 33 µg/dscm.

4. What Are the Particulate Matter Standards?

We establish standards for both existing and new lightweight aggregate kilns that limit particulate matter emissions to 57 mg/dscm. The particulate matter standard is a surrogate control for the metals antimony, cobalt, manganese, nickel, and selenium. We refer to these five metals as "nonenumerated metals" because standards specific to each metal have not been established. The rationale for adopting these standards is discussed below.

a. What Is the MACT Floor for Existing Sources? In the April 1996 NPRM, we defined floor control based upon the performance of a fabric filter with an air-to-cloth ratio of 2.8 acfm/ft^2. The MACT floor was 110 mg/dscm (0.049 gr/dscf). (61 FR at 17403.) In the May 1997 NODA, we defined the technology basis as a fabric filter for a MACT floor, but did not characterize the design and operation characteristics of the particulate matter control equipment, air-to-cloth ratio of a fabric filter, because we had limited information on these parameters. (62 FR at 24233.) Instead, for each particulate matter test condition, we evaluated the corresponding semivolatile metal system removal efficiency and screened out sources with relatively poor system removal efficiencies as a means to identify and eliminate from consideration those sources not using MACT floor control. Our reevaluation of the lightweight aggregate kiln particulate matter data resulted in a MACT floor of 50 mg/dscm (0.022 gr/dscf).

Some commenters state that a floor emission level of 50 mg/dscm (0.022 gr/dscf) is too high and a particulate matter standard of 23 mg/dscm (0.010 gr/dscf) is more appropriate because it is consistent with the level of performance achieved by incinerators using fabric filters. Even though we agree that well designed and properly operated fabric filters in use at all lightweight aggregate kilns can achieve low levels, we are concerned that an emission level of 23 mg/dscm would not be appropriate given the high inlet grain loading inherent with the lightweight aggregate manufacturing process, typically much higher than the particulate loading to incinerators.

Commenters also express concern that the Agency identified separate, different MACT pools and associated MACT controls for particulate matter, semivolatile metals, and low volatile metals, even though all three are controlled, at least in part, by the particulate matter control device. These commenters stated that our approach is likely to result in three different design specifications. We agree with these commenters and, in the final rule, the same initial MACT pool is used to establish the floor levels for particulate matter, semivolatile metals, and low volatile metals. See discussion in Part Four, Section V.

For the final rule, we conclude that the general floor methodology discussed in the May 1997 NODA is appropriate. MACT control for particulate matter is based on the performance of fabric filters. Since we lack data to fully characterize control equipment from all sources and we lack information on the relationship between the design parameters and the system performance, we evaluated both low and semivolatile metal system removal efficiencies associated with the source's particulate matter emissions to identify those sources not using MACT floor control. Our data show that all lightweight aggregate kilns are achieving greater than 99 percent system removal efficiency for both low and semivolatile metals, with some attaining 99.99 percent removal. Since we found no sources with system removal efficiencies indicative of poor performance, we conclude that all lightweight aggregate kilns are using MACT controls and the floor emission limit is identified as 57 mg/dscm (0.025 gr/dscf).

The performance level of 57 mg/dscm is generally consistent with that expected from well designed and operated fabric filters, and that achieved by other similar types of combustion sources operating with high inlet grain loadings. We have particulate matter data from all lightweight aggregate kiln sources, and multiple test conditions, conducted at 3 year intervals, are available for many of the sources. We conclude that the number of test conditions available adequately covers the range of variability of well operated and designed fabric filters.[166]

We considered, but rejected, basing the particulate matter floor for lightweight aggregate kilns on the New Source Performance Standard. The New Source Performance Standard limits particulate matter emissions to 92 mg/dscm (0.040 gr/dscf), uncorrected for oxygen. (See 40 CFR 60.730, Standards of Performance for Calciners and Dryers in Mineral Industries.) We rejected the New Source Performance Standard as the basis for the floor emission level

[166] USEPA, "Final Technical Support Document for HWC MACT Standards, Volume III: Selection of MACT Standards and Technologies," July 1999.

because our MACT analysis of data from existing sources indicates that a particulate matter floor level lower than the New Source Performance Standard is currently being achieved by existing hazardous waste burning lightweight aggregate kilns. Further, all available emission data for hazardous waste burning lightweight aggregate kilns are well below the New Source Performance Standard particulate matter standard. Thus, the particulate matter floor emission level is 57 mg/dscm based on an analysis of existing emissions data.

We estimate that, based on a design level of 70 percent of the standard, over 90 percent of lightweight aggregate kiln sources currently are meeting the floor level. The national annualized compliance cost for lightweight aggregate kilns to reduce particulate matter emissions to comply with the floor emission level is $18,000 for the entire hazardous waste burning lightweight aggregate kiln industry, and our floor will reduce nonenumerated metals and particulate matter emissions by 0.01 Mg/yr and 2.7 Mg/yr, respectively, or 7 percent from current baseline emissions.

b. What Are Our Beyond-the-Floor Considerations for Existing Sources? In the NPRM, we proposed a beyond-the-floor emission level of 69 mg/dscm (0.030 gr/dscf) and solicited comment on an alternative beyond-the-floor emission level of 34 mg/dscm (0.015 gr/dscf) based on improved particulate matter control. (61 FR at 17403.) In the May 1997 NODA, we concluded that a beyond-the-floor standard may not be warranted given a reduced particulate matter floor level compared to the proposed floor emission level. (62 FR at 24233.)

In the final rule, we considered a beyond-the-floor level of 34 mg/dscm for existing lightweight aggregate kilns based on improved particulate matter control. For analysis purposes, improved particulate matter control entails the use of higher quality fabric filter bag material. We then determined the cost of achieving this level of particulate matter, with corresponding reductions in the nonenumerated metals for which particulate matter is a surrogate, to determine if this beyond-the-floor level would be appropriate. The national incremental annualized compliance cost for lightweight aggregate kilns to meet this beyond-the-floor level, rather than comply with the floor controls, would be approximately $110,000 for the entire hazardous waste burning lightweight aggregate kiln industry and would provide an incremental reduction in nonenumerated metals emissions nationally beyond the MACT floor controls of 0.03 Mg/yr. Based on these costs of approximately $3.7 million per additional Mg of nonenumerated metals emissions removed, we conclude that this beyond-the-floor option for lightweight aggregate kilns is not acceptably cost-effective nor otherwise justified. Therefore, we do not adopt this beyond-the-floor standard. Thus, the promulgated particulate matter standard for existing hazardous waste burning lightweight aggregate kilns is the floor emission level of 57 mg/dscm.

c. What Is the MACT Floor for New Sources? In the April 1996 proposal, we defined floor control for new sources based on the level of performance of a fabric filter with an air-to-cloth ratio of 1.5 acfm/ft2. The MACT floor emission level was 120 mg/dscm (0.054 gr/dscf). (61 FR at 17408.) In the May 1997 NODA, MACT control was defined as a well-designed and properly operated fabric filter, and the floor emission level for new lightweight aggregate kilns was 50 mg/dscm (0.022 gr/dscf). (62 FR at 24233.)

All lightweight aggregate kilns use fabric filters to control particulate matter. As discussed earlier, we have limited information on the design and operation characteristics of existing control equipment currently used by lightweight aggregate kilns. As a result, we are unable to identify a specific technology that can consistently achieve lower emission levels than the controls used by lightweight aggregate kilns achieving the MACT floor level for existing sources. Lightweight aggregate kilns achieve the floor emission level with well-designed and properly operated fabric filters. Thus, floor control for new kilns is likewise a well-designed and properly operated fabric filter. Therefore, as discussed for existing sources, the MACT floor level for new lightweight aggregate kilns is 57 mg/dscm (0.025 gr/dscf).

d. What Are Our Beyond-the-Floor Considerations for New Sources? In the April 1996 NPRM, we proposed a beyond-the-floor standard of 69 mg/dscm (0.030 gr/dscf) based on improved particulate matter control, which was consistent with existing sources. (61 FR at 17408.) In the May 1997 NODA, we concluded, as we did for existing sources, that a beyond-the-floor level for particulate matter may not be warranted due to the high costs of control and relatively small amount of particulate matter removed from air emissions. (62 FR at 24233.)

As discussed for existing sources, we considered a beyond-the-floor level of 34 mg/dscm for new lightweight aggregate kilns based on improved particulate matter control. For analysis purposes, improved particulate matter control entails the use of higher quality fabric filter bag material. We then determined the cost of achieving this level of particulate matter, with corresponding reductions in the nonenumerated metals for which particulate matter is a surrogate, to determine if this beyond-the-floor level would be appropriate. The incremental annualized compliance cost for one new lightweight aggregate kiln to meet this beyond-the-floor level, rather than comply with floor controls, would be approximately $38 thousand and would provide an incremental reduction in nonenumerated metals emissions of approximately 0.012 Mg/yr.[167] Based on these costs of approximately $3.1 million per additional Mg of nonenumerated metals removed, we conclude that a beyond-the-floor standard of 34 mg/dscm is not justified due to the high cost of compliance and relatively small nonenumerated metals emission reductions. Further, a standard of 57 mg/dscm would adequately control the unregulated hazardous air pollutant metals for which it is being used as a surrogate. Thus, the particulate matter standard for new lightweight aggregate kilns is the floor level of 57 mg/dscm.

5. What Are the Semivolatile Metals Standards?

In the final rule, we establish a standard for existing and new lightweight aggregate kilns that limits semivolatile metal emissions to 250 and 43 µg/dscm, respectively. The rationale for adopting these standards is discussed below.

a. What Is the MACT Floor for Existing Sources? All lightweight aggregate kilns use a combination of particulate matter control, *i.e.*, a fabric filter, and hazardous waste feedrate to control emissions of semivolatile metals. Current RCRA regulations establish limits on the maximum feedrate of lead and cadmium in all feedstreams. Thus, hazardous waste feedrate control is part of MACT floor control.

In the April 1996 proposal, we defined floor control as either (1) a fabric filter with an air-to-cloth ratio of 1.5 acfm/ft^2 and a hazardous waste feedrate level of 270,000 µg/dscm,

[167] Based on the data available, the average emissions in sum of the five nonenumerated metal from lightweight aggregate kilns using MACT particulate matter control is approximately 83 µg/dscm. To estimate emission reductions of the nonenumerated metals, we assume a linear relationship between a reduction in particulate matter and these metals.

expressed as a maximum theoretical emissions concentration; or (2) a combination of a fabric filter and venturi scrubber with an air-to-cloth ratio of 4.2 acfm/ft^2 and a hazardous waste feedrate level of 54,000 µg/dscm. The proposed floor emission level was 12 µg/dscm. (61 FR at 17405.) In the May 1997 NODA, we discussed a floor methodology where we used a breakpoint analysis to identify sources that were not using floor control with respect either to semivolatile metals hazardous waste feedrate or emissions control. Under this approach, we ranked semivolatile metal emissions data from sources that were achieving the particulate matter floor level of 50 mg/dscm or better. We identified the floor level as the test condition average associated with the breakpoint source. Thus, sources with atypically high emissions because of high semivolatile feedrate levels or poor semivolatile metals control were screened from the pool of sources used to define the floor emission level. Based on this analysis, we identified a floor emission level of 76 µg/dscm. (62 FR at 24234.)

We received few public comments in response to the proposal and May 1997 NODA concerning the lightweight aggregate kiln semivolatile metals floor emission level. We did receive comments on the application of techniques to identify breakpoints in the arrayed emissions data. This issue and our response to it are discussed in the floor methodology section in Part Four, Section V. We also received comments that our semivolatile metals analysis in the proposal and May 1997 NODA included several data base inaccuracies that, when corrected, would result in a higher floor level. We agree with the commenters and we revised the data base as necessary for the final rule analysis.

In the final rule, in general response to these comments, we use a revised engineering evaluation and data analysis method to establish the floor emission level for semivolatile metals. We use the aggregate feedrate approach in conjunction with floor control for particulate matter of 57 mg/dscm to identify a semivolatile metal floor emission level of 1,700 µg/dscm. We estimate that all lightweight aggregate kiln sources currently are meeting the floor level.

b. What Are Our Beyond-the-Floor Considerations for Existing Sources? In the April 1996 NPRM, we considered a beyond-the-floor emission level for semivolatile metals based on improved particulate matter control. We concluded that a beyond-the-floor emission level would not be cost-effective given that the proposed semivolatile metal floor level of 12 µg/dscm alone would result in an estimated 97 percent reduction in semivolatile metal emissions. (61 FR at 17405.) In the May 1997 NODA, we considered a beyond-the-floor emission level based on improved particulate matter control, but indicated that such a standard was not likely to be cost-effective due to the high costs of control. (62 FR at 24234.)

In developing the final rule, we identified three techniques for control of semivolatile metals as a basis to evaluate a beyond-the-floor standard: (1) Limiting the feed of semivolatile metals in the hazardous waste; (2) improved particulate matter control; and (3) limiting the feed of semivolatile metals in the raw materials. The results of each analysis are discussed below.

Limiting the Feedrate of Semivolatile Metals in Hazardous Waste. Under this option, as with cement kilns, we selected for evaluation a beyond-the-floor emission level of 240 µg/dscm to evaluate from among the range of possible levels that reflect improved feedrate control of semivolatile metals in hazardous waste. This emission level represents a significant increment of emission reduction from the floor level of 1700 µg/dscm, it is within the range of levels that are likely to be reasonably achievable using feedrate control, and it is generally consistent with the incinerator and cement kiln standards, thereby advancing a policy objective of essentially common standards among combustors of hazardous waste.

In performing an analysis of the 240 µg/dscm beyond-the-floor limit, we found that additional reductions beyond 250 µg/dscm represent a significant reduction in cost-effectiveness of incremental beyond-the-floor levels. A beyond-the-floor standard of 250 µg/dscm achieves the same goals as a beyond-the-floor standard of 240 µg/dscm in a more cost-effective manner. The national incremental annualized compliance cost for the lightweight aggregate kilns to meet this 250 µg/dscm beyond-the-floor level, rather than comply with the floor controls, would be approximately $88,000 and would provide an incremental reduction beyond emissions at the MACT floor in semivolatile metal emissions of an additional 0.17 Mg/yr. The cost-effectiveness of this emission level is approximately $530,000 per additional Mg of semivolatile metal removed.

We conclude that additional control of the feedrate of semivolatile metals in hazardous waste to achieve an emission level of 250 µg/dscm is warranted because this standard would reduce lead and cadmium emissions, which are particularly toxic hazardous air pollutants. In addition, Solite Corporation, which operates the majority of the hazardous waste burning lightweight aggregate kilns, stated in their public comments that a standard of 213 µg/dscm is achievable and adequately reflects the variability of lead and cadmium in raw material for their kilns. Further, the vast majority of the lead and cadmium fed to the lightweight aggregate kiln is from the hazardous waste,[168] not from the raw material or coal. We are willing to accept a more marginal cost-effectiveness for sources voluntarily burning hazardous waste in lieu of other fuels to ensure that sources are using best controls.

Moreover, this beyond-the-floor semivolatile metal standard better supports our Children's Health Initiative in that lead emissions, which are of highest significance to children's health, will be reduced by another 60 percent from today's baseline. We are committed to reducing lead emissions wherever and whenever possible. Finally, we note that this beyond-the-floor standard is also consistent with European Union standards for hazardous waste incinerators of approximately 200 µg/dscm for lead and cadmium combined. Therefore, we are adopting today a beyond-the-floor standard of 250 µg/dscm for existing lightweight aggregate kilns.

Improved Particulate Matter Control. We also evaluated improved particulate matter control as another beyond-the-floor control option for improved semivolatile metals control. We investigated a beyond-the-floor standard of 250 µg/dscm, an emission level consistent with the preferred option based on limiting the feedrate of semivolatile metals in hazardous waste. The national incremental annualized compliance cost for lightweight aggregate kilns to meet this beyond-the-floor level, rather than comply with the floor controls, would be approximately $88,000 thousand for all lightweight aggregate kilns and would provide an incremental reduction in semivolatile metal emissions beyond the MACT floor controls of 0.17 Mg/yr. Based on these costs of approximately $530,000 per additional Mg of semivolatile metal removed, we determined that this beyond-the-floor option may be warranted. However, as discussed below, the cost-effectiveness for this beyond-the-floor option is approximately equivalent to the costs

[168] USEPA, "Final Technical Support Document for HWC MACT Standards, Volume III: Selection of MACT Standards and Technologies", July 1999.

estimated for a beyond-the-floor option based on limiting the feed of semivolatile metals in the hazardous waste. We decided to base the beyond-the-floor standard for semivolatile metals on the feedrate option to be consistent with the cement kiln approach. Of course light-weight aggregate kilns are free to choose to improve particulate matter control in lieu of feedrate controls as their vehicle to achieve compliance with 250 ug/dscm.

Limiting the Feedrate of Semivolatile Metals in Raw Materials. A source can achieve a reduction in semivolatile metals emissions by substituting a feed material containing lower levels of lead and/or cadmium for a primary raw material higher in lead and/or cadmium levels. This beyond-the-floor option appears to be less cost effective compared to either of the options evaluated above because lightweight aggregate kilns are sited proximate to primary raw material supply. Transporting large quantities of an alternative source of raw material(s) is expected to be cost prohibitive. Therefore, we do not adopt this semivolatile metal beyond-the-floor standard.

Thus, the promulgated semivolatile metals standard for existing hazardous waste burning lightweight aggregate kilns is a beyond-the-floor standard of 250 µg/dscm based on limiting the feedrate of semivolatile metals in the hazardous waste.

c. What Is the MACT Floor for New Sources? In the April 1996 proposal, we defined floor control as a fabric filter with an air-to-cloth ratio of 1.5 acfm/ft^2 and a hazardous waste feedrate level of 270,000 µg/dscm, expressed as a maximum theoretical emissions concentration. The proposed floor emission level was 5.2 µg/dscm. (61 FR at 17408.) In the May 1997 NODA, we concluded that the floor control and emission level for existing sources for semivolatile metals would also be appropriate for new sources. Floor control was based on a combination of good particulate matter control and limiting hazardous waste feedrates of semivolatile metals to control emissions. We used a breakpoint analysis of the semivolatile metal emissions data to exclude sources achieving substantially poorer semivolatile metal control than the majority of sources. The NODA floor emission level was 76 µg/dscm for new sources. (62 FR at 24234.)

In the final rule, as discussed previously, we use a revised engineering evaluation and data analysis method to establish the floor emission level for semivolatile metals. We use the aggregate feedrate approach in conjunction with floor control for particulate matter of 57 mg/dscm to identify a semivolatile metal floor emission level of 43 µg/dscm.

d. What Are Our Beyond-the-Floor Considerations for New Sources? In the April 1996 NPRM and May 1997 NODA, we considered a semivolatile metal beyond-the-floor emission level for new sources, but determined that the standard would not be cost-effective because the floor emission levels already achieved significant reductions in semivolatile metals emissions. (61 FR at 17408 and 62 FR at 24234.)

For the final rule, we do not adopt a beyond-the-floor emission level because the MACT floor for new sources is already substantially lower than the beyond-the-floor emission standard for existing sources. As a result, a beyond-the-floor standard for new lightweight aggregate kilns is not warranted due to the high costs of control versus the minimal emissions reductions that would be achieved. Therefore, we adopt the semivolatile metal MACT floor standard of 43 µg/dscm for new hazardous waste burning lightweight aggregate kilns.

6. What Are the Low Volatile Metals Standards?

In the final rule, we establish a standard for both existing and new lightweight aggregate kilns that limits low volatile metal emissions to 110 µg/dscm. The rationale for adopting these standards is discussed below.

a. What Is the MACT Floor for Existing Sources? In the April 1996 proposal, we defined floor control based on the performance of a fabric filter with an air-to-cloth ratio of 1.8 acfm/ft^2 and a hazardous waste feedrate level of 46,000 µg/dscm, expressed as a maximum theoretical emissions concentration. The proposed floor emission level was 340 µg/dscm. (61 FR at 17405.) In the May 1997 NODA, we discussed a floor methodology where we used a breakpoint analysis to identify sources that were not using floor control with respect either to low volatile metals hazardous waste feedrate or emissions control. Under this approach, we ranked low volatile metal emissions data from sources that were achieving the particulate matter floor level of 50 mg/dscm or better. We identified the floor level as the test condition average associated with the breakpoint source. Thus, sources with atypically high emissions because of high low volatile feedrate levels or poor low volatile metals control were screened from the pool of sources used to define the floor emission level. Based on this analysis, we identified a floor emission level of 37 µg/dscm. (62 FR at 24234.)

We received few comments, in response to the April 1996 NPRM and May 1997 NODA, concerning the low volatile metals floor emission level. We received comments, however, on several overarching issues including the appropriateness of considering feedrate control of metals (including low volatile metals) in hazardous waste as a MACT floor control technique and the specific procedure of identifying breakpoints of arrayed emissions data. These issues and our responses to them are discussed in the floor methodology section in Part Four, Section V.

For today's rule, we use a revised engineering evaluation and data analysis method to establish the MACT floor level for low volatile metals. The aggregate feedrate approach in conjunction with MACT particulate matter control to 57 mg/dscm results in a low volatile metal floor emission level of 110 µg/dscm.

We estimate that over 80 percent of existing lightweight aggregate kiln sources in our data base meet the floor level. The national annualized compliance cost for lightweight aggregate kilns to reduce low volatile metal emissions to comply with the floor emission level is $52,000 for the entire hazardous waste burning lightweight aggregate kiln industry, and will reduce low volatile metal emissions by 0.04 Mg/yr or 40 percent from current baseline emissions.

b. What Are Our Beyond-the-Floor Considerations for Existing Sources? In the April 1996 NPRM and May 1997 NODA, we considered a beyond-the-floor standard for low volatile metals based on improved particulate matter control. However, we concluded that a beyond-the-floor standard would not be cost-effective due to the high cost of emissions control and relatively small amount of low volatile metals removed from air emissions. (61 FR at 17406 and 62 FR at 24235.)

For today's rule, we identified three potential beyond-the-floor techniques for control of low volatile metals: (1) Improved particulate matter control; (2) limiting the feed of low volatile metals in the hazardous waste; and (3) limiting the feed of low volatile metals in the raw materials. The results of each analysis are discussed below.

Improved Particulate Matter Control. Our judgment is that a beyond-the-floor standard based on improved particulate matter control would be less cost-effective that a beyond-the-floor option based on limiting the feedrate of low

volatile metals in the hazardous waste. Our data show that lightweight aggregate kilns are already achieving a 99.9% system removal efficiency of low volatile metals and some sources are even attaining 99.99%. Thus, pollution control equipment retrofit costs for improved control would be significant. Thus, we conclude a beyond-the-floor emission level for low volatile metals based on improved particulate matter control for lightweight aggregate kilns is not warranted.

Limiting the Feedrate of Low Volatile Metals in the Hazardous Waste. We also considered a beyond-the-floor level of 70 µg/dscm based on additional feedrate control of low volatile metals in the hazardous waste. Our investigation shows that this beyond-the-floor option would achieve an incremental reduction in low volatile metals of only 0.01 Mg/yr. Given that this beyond-the-floor level would not achieve appreciable emissions reductions, significant cost-effectiveness considerations would likely arise, thus suggesting that this beyond-the-floor standard is not warranted.

Limiting the Feedrate of Low Volatile Metals in Raw Materials. A source can achieve a reduction in low volatile metal emissions by substituting a feed material containing lower levels of these metals for a primary raw material higher low volatile metal levels. This beyond-the-floor option appears to be less cost-effective compared to either of the options evaluated above because lightweight aggregate kilns are sited proximate to primary raw material supply. Transporting large quantities of an alternative source of raw material(s) is expected to be very costly and not cost-effective considering the limited emissions reductions that would be achieved. Therefore, we do not adopt this low volatile metals beyond-the-floor standard.

For reasons discussed above, we do not adopt a beyond-the-floor level for low volatile metals, and establish the emissions standard for existing hazardous waste burning lightweight aggregate kilns at 110 µg/dscm.

c. What Is the MACT Floor for New Sources? At proposal, we defined floor control based on the performance of a fabric filter with an air-to-cloth ratio of 1.3 acfm/ft^2 a hazardous waste feedrate level of 37,000 µg/dscm, expressed as a maximum theoretical emissions concentration. The proposed floor level was 55 µg/dscm. (61 FR at 17408.) In the May 1997 NODA, we concluded that the floor control and emission level for existing sources for low volatile metals would also be appropriate for new sources. Floor control was based on a combination of good particulate matter control and limiting hazardous waste feedrate of low volatile metals to control emissions. We used a breakpoint analysis of the low volatile metal emissions data to exclude sources achieving substantially poorer low volatile metal control than the majority of sources. The NODA floor was 37 µg/dscm. (62 FR at 24235.)

In the final rule, in response to general comments on the May 1997 NODA, we use a revised engineering evaluation and data analysis method to establish the floor emission level for low volatile metals. We use the aggregate feedrate approach in conjunction with floor control for particulate matter of 57 mg/dscm to identify a low volatile metal floor emission level of 110 µg/dscm.

d. What Are Our Beyond-the-Floor Considerations for New Sources? In the April 1996 NPRM and May 1997 NODA, we considered a low volatile metal beyond-the-floor level, but determined that a beyond-the-floor standard would not be cost-effective due to the high cost of treatment and relatively small amount of low volatile metals removed from air emissions. We received no comments to the contrary.

For the final rule, as discussed for existing sources, we do not adopt a beyond-the-floor level for new sources, and conclude that the floor emission level is appropriate. Therefore, we adopt the low volatile metal floor level of 110 µg/dscm as the emission standard for new hazardous waste burning lightweight aggregate kilns.

7. What Are the Hydrochloric Acid and Chlorine Gas Standards?

In the final rule, we establish a standard for existing and new lightweight aggregate kilns that limits hydrochloric acid and chlorine gas emissions to 230 and 41 ppmv, respectively. The rationale for adopting these standards is discussed below.

a. What Is the MACT Floor for Existing Sources? In the April 1996 proposal, we identified floor control for hydrochloric acid/chlorine gas as either: (1) Hazardous waste feedrate control of chlorine to 1.5 g/dscm, expressed as a maximum theoretical emissions concentration; or (2) a combination of a venturi scrubber and hazardous waste feedrate level of 14 g/dscm, expressed as a maximum theoretical emissions concentration. The proposed floor emission level was 2100 ppmv. (61 FR at 17406.) In the May 1997 NODA, we used the same data analysis method as proposed, except that a computed emissions variability factor was no longer added. The floor emission level was 1300 ppmv. (62 FR at 24235.)

We received few comments concerning the hydrochloric acid/chlorine gas floor methodology and emission level. One commenter supports the use of a variability factor in calculating the floor emission level. Generally, the final emission standards, including hydrochloric acid/chlorine gas, already accounts for emissions variability without adding a statistically-derived emissions variability factor. This issue and our response to it are discussed in detail in the floor methodology section in Part Four, Section V.

For today's rule, we use a revised engineering evaluation and data analysis method to establish the MACT floor level for hydrochloric acid and chlorine gas. The aggregate feedrate approach results in a floor emission level of 1500 ppmv.

We estimate that approximately 31 percent of lightweight aggregate kilns in our data base currently meet the floor emission level. The national annualized compliance cost for sources to reduce hydrochloric acid and chlorine gas emissions to comply with the floor level is $350,000 for the entire hazardous waste burning lightweight aggregate kiln industry, and will reduce hydrochloric acid and chlorine gas emissions by 182 Mg/yr or 10 percent from current baseline emissions.

b. What Are Our Beyond-the-Floor Considerations for Existing Sources? In the April 1996 proposal, we defined beyond-the-floor control as wet or dry lime scrubbing with a control efficiency of 90 percent. We proposed a beyond-the-floor standard of 450 ppmv, which included a statistical variability factor. (61 FR at 17406.) In the May 1997 NODA, the beyond-the-floor standard was 130 ppmv based on wet or dry scrubbing with a control efficiency of 90 percent. (62 FR at 24235.)

We identified three potential beyond-the-floor techniques for control of hydrochloric acid and chlorine gas emissions: (1) Dry lime scrubbing; (2) limiting the feed of chlorine in the hazardous waste; and (3) limiting the feed of chlorine in the raw materials. The result of each analysis is discussed below.

Dry Lime Scrubbing. Based on a joint emissions testing program with Solite Corporation in 1997, dry lime scrubbing at a stoichiometric lime ratio of 3:1 achieved greater than 85 percent removal of hydrochloric acid and chlorine gas. For the final rule, we considered a beyond-the-floor emission level of 230 ppmv based on a 85 percent removal efficiency from the floor level of 1500 ppmv.

The national incremental annualized compliance cost for all lightweight aggregate kilns to meet this beyond-the-floor level is approximately $1.5 million. This would provide an incremental reduction in hydrochloric acid/chlorine gas emissions beyond the MACT floor controls of an additional 1320 Mg/yr, or 80 percent. Based on these costs of approximately $1,100 per additional Mg hydrochloric acid/chlorine gas removed, this hydrochloric acid/chlorine gas beyond-the-floor option for lightweight aggregate kilns is justified. Therefore, we are adopting a beyond-the-floor standard of 230 ppmv for existing lightweight aggregate kilns.

One commenter disagreed with our proposal to base the beyond-the-floor standard on dry lime scrubbing achieving 90% removal. The commenter states that dry lime scrubbing cannot cost-effectively achieve 90 percent control of hydrochloric acid and chlorine gas emissions. To achieve a 90 percent capture efficiency at a stoichiometric ratio of 3:1, the commenter maintains that a source would need to install special equipment and make operational modifications that are less cost-effective than simple dry lime scrubbing at a lower removal efficiency. The commenter identifies this lower level of control at 80 percent based on the joint emissions testing program.[169] The commenter does agree, however, that dry lime scrubbing can achieve 90 percent capture without the installation of special equipment by operating at a stoichiometric lime ratio greater than 3:1. One significant consequence of operating at higher stoichiometric lime ratios, the commenter states, is the adverse impact to the collected particulate matter. Currently, the collected particulate matter is recycled into the lightweight aggregate product. At higher stoichiometric lime ratios, unreacted lime and collected chloride and sulfur salts would prevent this recycling practice and would require the disposal of all the collected particulate matter at significant and unjustified costs.

We agree with the commenter that data from the joint emissions testing program does not support a 90 percent capture efficiency by simple dry lime scrubbing at a stoichiometric lime ratio of 3:1. We disagree with the commenter that the data support an efficiency no greater than 80 percent. In the testing program, we evaluated the capture efficiency of lime during four runs at a stoichiometric lime ratio of approximately 3:1. The results show that hydrochloric acid was removed at rates ranging from 86 to 91 percent with one exception. For that one run, the removal was calculated as 81 percent. For reasons detailed in the Comment Response Document and in the technical support document,[170] we conclude that the data from this run should not be considered because the calculated stoichiometric lime ratio is suspect. When we remove this data point from consideration, the available information clearly indicates that dry lime scrubbing at a stoichiometric ratio of 3:1 can achieve greater than 85 percent removal. Therefore, in the final rule, we base the beyond-the-floor standard of 230 ppmv on 85 percent removal.

Limiting the Feedrate of Chlorine in the Hazardous Waste. We also considered a beyond-the-floor standard for hydrochloric acid/chlorine gas based on additional feedrate control of chlorine in the hazardous waste. This option achieves lower emission reductions and is less cost-effective than the dry lime scrubbing option discussed above. Therefore, we are not adopting a hydrochloric acid/chlorine gas beyond-the-floor standard based on limiting the feed of chlorine in the hazardous waste.

Limiting the Feedrate of Chlorine in the Raw Materials. A source can achieve a reduction in hydrochloric acid/chlorine gas emissions by substituting a feed material containing lower levels of chlorine for a primary raw material higher chlorine levels. This beyond-the-floor option appears to be less cost effective compared to either of the options evaluated above because lightweight aggregate kilns are sited proximate to primary raw material supply. Transporting large quantities of an alternative source of raw material(s) is expected to be very costly and not cost-effective considering the limited emissions reductions that would be achieved. Therefore, we do not adopt this hydrochloric acid/chlorine gas beyond-the-floor standard.

In summary, we establish the hydrochloric acid/chlorine gas standard for existing lightweight aggregate kilns at 230 ppmv based on scrubbing.

c. What Is the MACT Floor for New Sources? In the April 1996 proposal, we defined MACT floor control for new sources as a venturi scrubber with a hazardous waste feedrate level of 14 g/dscm, expressed as a maximum theoretical emissions concentration. We proposed a floor emission level of 62 ppmv. (61 FR at 17409.) In the May 1997 NODA, we concluded that the floor control and emission level for existing sources for hydrochloric acid/chlorine gas would also be appropriate for new sources. Floor control was based on limiting hazardous waste feedrates of chlorine to control hydrochloric acid/chlorine gas emissions. We screened out some data with anomalous system removal efficiencies compared to the majority of sources. The floor emission level for new lightweight aggregate kilns was 43 ppmv. (62 FR at 24235.)

In the final rule, we use a similar engineering evaluation and data analysis method as discussed in the May 1997 NODA to establish the floor emission level for hydrochloric acid/chlorine gas. We identified MACT floor control as wet scrubbing since the best controlled source is using this control technology. One lightweight aggregate facility uses venturi-type wet scrubbers for the control of hydrochloric acid/chlorine gas. We evaluated the chlorine system removal efficiencies achieved by wet scrubbing at this facility. Our data show that this facility is consistently achieving greater than 99 percent control of hydrochloric acid/chlorine gas. Because we have no data with system removal efficiencies indicative of poor performance, we conclude that all data from this facility are reflective of MACT control (wet scrubbers), and, therefore, the floor emission limit for new sources is set equal to the highest test condition average of these data. Thus, the MACT floor emission limit for new lightweight aggregate kilns is identified as 41 ppmv.

d. What Are Our Beyond-the-Floor Considerations for New Sources? In the April 1996 proposal and May 1997 NODA, we did not propose a beyond-the-floor standard for new sources because the floor emission level was based on wet scrubbing, which is the best available control technology for hydrochloric acid/chlorine gas. (61 FR at 17409 and 62 FR at 24235.) We continue to believe that a beyond-the-floor emission level for new sources is not warranted due to the high costs of treatment and the small additional amount of chlorine that would be removed. Therefore, the MACT standard for new lightweight aggregate kilns is identified as 41 ppmv.

8. What Are the Hydrocarbon and Carbon Monoxide Standards?

In the final rule, we establish hydrocarbon and carbon monoxide standards as surrogates to control emissions of nondioxin organic hazardous air pollutants for existing and

[169] See "Final Technical Support Document for HWC MACT Standards, Volume III: Selection of MACT Standards and Technologies," July 1999.

[170] See "Final Technical Support Document for HWC MACT Standards, Volume III: Selection of MACT Standards and Technologies," July 1999.

new lightweight aggregate kilns. The standards limit hydrocarbon and carbon monoxide concentrations to 20 ppmv [171] or 100 ppmv, [172] respectively. Existing and new lightweight aggregate kilns can elect to comply with either the hydrocarbon limit or the carbon monoxide limit on a continuous basis. Lightweight aggregate kilns that choose to comply with the carbon monoxide limit on a continuous basis must also demonstrate compliance with the hydrocarbon standard during the comprehensive performance test. However, continuous hydrocarbon monitoring following the performance test is not required.[173] We discuss the rationale for establishing these standards below.

a. What Is the MACT Floor for Existing Sources? As discussed in Part Four, Section II.A.2, we proposed limits on hydrocarbon and carbon monoxide emissions as surrogates to control nondioxin organic hazardous air pollutants. In the April 1996 NPRM, we identified floor control as combustion of hazardous waste under good combustion practices to minimize the generation of fuel-related hydrocarbons. We proposed a hydrocarbon emission level of 14 ppmv and a carbon monoxide level of 100 ppmv. The hydrocarbon level was based on an analysis of the available emissions data, while the basis of the carbon monoxide level was existing federal regulations (see § 266.104(b)). (61 FR at 17407.) In the May 1997 NODA, we solicited comment a hydrocarbon emission level of 10 ppmv. The hydrocarbon floor level was changed to 10 ppmv from 14 ppmv because of a change in the lightweight aggregate kiln universe of facilities. The lightweight aggregate kiln with the highest hydrocarbon emissions stopped burning hazardous waste. With the exclusion of the hydrocarbon data from this one source, the remaining lightweight aggregate kilns appeared to be able to meet a hydrocarbon standard on the order of 6 ppmv. However, since we were unable to identify an engineering reason why lightweight aggregate kilns using good combustion practices should be able to achieve lower hydrocarbon emissions than incinerators, we indicated that it may be more appropriate to establish the hydrocarbon standard at 10 ppmv, which was equal to the incinerator emission level discussed in that NODA. In the NODA, we also continued to indicate our preference for a carbon monoxide emission level of 100 ppmv. (62 FR at 24235.)

One commenter states that some lightweight aggregate kilns may not be able to meet a 10 ppmv hydrocarbon standard due to organics in raw materials. Notwithstanding our data base of short-term data indicating the achievability of a hydrocarbon standard of 10 ppmv, the commenter states that this standard may be unachievable over the long-term because trace levels of organic matter in the raw materials vary significantly. Hydrocarbon emissions could increase as the source uses raw materials from different on-site quarry locations. Thus, the commenter supports a hydrocarbon emission level consistent with cement kilns (*i.e.*, 20 ppmv), and opposes a floor emission level that is comparable to incinerators for which low temperature organics desorption from raw materials is not a complicating issue.

Our limited hydrocarbon data, as discussed above, indicates that a hydrocarbon level of 10 ppmv is achievable for lightweight aggregate kilns.[174] However, we agree that over long-term operations, lightweight aggregate kilns may encounter variations in the level of trace organics in raw materials, similar to cement kilns, that may preclude some kilns from achieving a hydrocarbon limit of 10 ppmv. Thus, we conclude that a hydrocarbon emission level of 20 ppmv, the same floor level for cement kilns, is also appropriate for lightweight aggregate kilns. A hydrocarbon standard of 20 ppmv also is based on existing federally-enforceable RCRA regulations, to which lightweight aggregate kilns are currently subject. (See § 266.104(c).)

Some commenters also support a requirement for both a carbon monoxide and hydrocarbon limit for lightweight aggregate kilns. These commenters state that requiring both hydrocarbon and carbon monoxide limits would further reduce emissions of organic hazardous air pollutants. One commenter notes that 83 percent of existing lightweight aggregate kilns are currently achieving both a hydrocarbon level of 20 ppmv and a carbon monoxide standard of 100 ppmv.

We carefully considered the merits and drawbacks to requiring both a hydrocarbon and carbon monoxide standard. First, stack gas carbon monoxide levels may not be a universally reliable indicator of combustion intensity and efficiency for some lightweight aggregate kilns due, first, to carbon monoxide generation by disassociation of carbon dioxide to carbon monoxide at high temperatures and, second, to evolution of carbon monoxide from the trace organic constituents in raw material feedstock.[175] One commenter supports our view by citing normal variability in carbon monoxide levels at their kiln with no apparent relationship to combustion conditions, such as temperature, residence time, excess oxygen levels. Thus, carbon monoxide can be overly conservative surrogate for some kilns.[176]

Second, requiring both continuous monitoring of carbon monoxide and hydrocarbon in the stack is at least somewhat redundant for control of organic emissions from combustion of hazardous waste because: (1) Hydrocarbons alone are a direct and reliable surrogate for measuring the destruction of organic hazardous air pollutants; and (2) carbon monoxide is generally a conservative indicator of good combustion conditions and thus good control of organic hazardous air pollutants. See Part Four, Section IV.B of the preamble for a discussion of our approach to using carbon monoxide or hydrocarbons to control organic emissions.

We identify a carbon monoxide level of 100 ppmv and a hydrocarbon level of 20 ppmv as floor control for existing sources because they are existing federally enforceable standards for hazardous waste burning lightweight aggregate kilns. See § 266.104(b) and (c). As current rules allow, sources would have the option of complying with either limit. Given that these are current rules, all lightweight aggregate kilns can currently achieve these emission levels. Thus, we estimate no emissions reductions or costs for these floor levels.

Lightweight aggregate kilns that choose to continuously monitor and

[171] Hourly rolling average, reported as propane, dry basis and corrected to 7 percent oxygen.

[172] Hourly rolling average, dry basis, corrected to 7 percent oxygen.

[173] As discussed in Part 5, Section X.F, lightweight aggregate kilns that feed hazardous waste at a location other than the end where products are normally discharged and where fuels are normally fired must comply with the 20 ppmv hydrocarbon standards (*i.e.*, these sources do not have the option to comply with the carbon monoxide standard)

[174] Our data base for hydrocarbons consists of short-term emissions data.

[175] Raw materials enter the upper end of the kiln and move counter-current to the combustion gas. Thus, as the raw materials are convectively heated in the upper end kiln above the flame zone, organic compounds can evolve from trace levels of organics in the raw materials. These organic compounds can be measured as hydrocarbons, and when only partially oxidized, carbon monoxide. This process is not related to combustion of hazardous waste or other fuels in the combustion zone at the other end of the kiln.

[176] Of course, if a source elects to comply with the carbon monoxide standard, then we are sure that it is achieving good combustion conditions and good control of organic hazardous air pollutants that could be potentially emitted from hazardous waste fed into the combustion zone.

comply with the carbon monoxide standard must demonstrate during the performance test that they are also in compliance with the hydrocarbon emission standard. In addition, kilns that monitor carbon monoxide alone must also set operating limits on key parameters that affect combustion conditions to ensure continued compliance with the hydrocarbon emission standard. We developed this modification because of some limited data that show a source can produce high hydrocarbon emissions while simultaneously producing low carbon monoxide emissions. We conclude from this information that it is necessary to confirm the carbon monoxide-hydrocarbon emissions relationship for every source that selects to monitor carbon monoxide emissions alone. See discussion in Part Four, Section IV.B.

b. What Are Our Beyond-the-Floor Considerations for Existing Sources? In the April 1996 proposal, we identified beyond-the-floor control levels for carbon monoxide and hydrocarbon in the main stack of 50 ppmv and 6 ppmv, respectively. (61 FR at 17407.) These beyond-the-floor levels were based on the use of a combustion gas afterburner. We indicated in the proposal, however, that this type of beyond-the-floor control would be cost prohibitive. Our preliminary estimates suggested that going beyond-the-floor for carbon monoxide and hydrocarbons would more than double the national costs of complying with the proposed standards. We continue to believe that a beyond-the-floor standard for carbon monoxide and hydrocarbons based on an afterburner is not justified and do not adopt a beyond-the-floor standard for existing lightweight aggregate kilns.

In summary, we adopt the floor emission levels for hydrocarbons, 20 ppmv, or carbon monoxide, 100 ppmv, as standards in the final rule.

c. What Is the MACT Floor for New Sources? In the April 1996 NPRM, we identified MACT floor control as operating the kiln under good combustion practices. Because we were unable to quantify good combustion practices, floor control for the single best controlled source was the same as for existing sources. We proposed, therefore, a floor emission level of 14 ppmv for hydrocarbons and a 100 ppmv limit for carbon monoxide. (61 FR at 17409.) In the May 1997 NODA, we continued to identify MACT floor control as good combustion practices and we took comment on the same emission levels as existing sources: 20 ppmv for hydrocarbons and 100 ppmv for carbon monoxide. (62 FR at 24235.)

In developing the final rule, we considered the comment that the rule should allow compliance with either a carbon monoxide standard of 100 ppmv or a hydrocarbon standard of 20 ppmv. Given that this option is available under the existing regulations for new and existing sources, we conclude that this represents MACT floor for new sources. These emission levels are achieved by operating the kiln under good combustion practices to minimize fuel-related hydrocarbons and carbon monoxide emissions. As current rules allow, sources would have the option of complying with either limit. See § 266.104(b) and (c).

We also considered site selection based on availability of acceptable raw material hydrocarbon content as an approach to establish a hydrocarbon emission level at new lightweight aggregate kilns. This approach is similar to that done for new hazardous waste burning cement kilns at greenfield sites (see discussion above). For cement kilns, we finalize a new source floor hydrocarbon emission standard at a level consistent with the proposed standard for nonhazardous waste burning cement kilns. Because we are planning to issue MACT emission standards for nonhazardous waste lightweight aggregate kiln sources, we will revisit establishing a hydrocarbon standard at new lightweight aggregate kilns at that time so that a hydrocarbon standard, if determined appropriate, is consistent for these sources. We are deferring this decision to a later date to ensure that hazardous waste sources are regulated no less stringently than nonhazardous waste lightweight aggregate kilns.

In summary, we are identifying a carbon monoxide level of 100 ppmv and a hydrocarbon level of 20 ppmv as floor control for new sources because they are existing federally enforceable standards for hazardous waste burning lightweight aggregate kilns. As discussed for existing sources above, lightweight aggregate kilns that choose to continuously monitor and comply with the carbon monoxide standard must demonstrate during the performance test that they are also in compliance with the hydrocarbon emission standard.

d. What Are Our Beyond-the-Floor Considerations for New Sources? In the April 1996 proposal, we identified beyond-the-floor emission levels for hydrocarbons and carbon monoxide of 6 ppmv and 50 ppmv, respectively for new sources. These beyond-the-floor levels were based on the use of a combustion gas afterburner. (61 FR at 17409.) We indicated in the proposal, however, that beyond-the-floor control was not justified due to the significant costs to retrofit kilns with afterburner controls. We estimated that going beyond-the-floor for hydrocarbons and carbon monoxide would more than double the national costs of complying with the proposed standards. We concluded that beyond-the-floor standards were not warranted. In the May 1996 NODA, we again indicated that a beyond-the-floor standard based on use of an afterburner would not be cost-effective and, therefore, justified. As discussed above for existing sources, we conclude that a beyond-the-floor standard for carbon monoxide and hydrocarbons based on use of an afterburner would not be justified and do not adopt a beyond-the-floor standard for new lightweight aggregate kilns. (62 FR 24235.)

In summary, we adopt the floor emission levels for hydrocarbons, 20 ppmv, or carbon monoxide, 100 ppmv, as standards in the final rule.

9. What Are the Standards for Destruction and Removal Efficiency?

We establish a destruction and removal efficiency (DRE) standard for existing and new lightweight aggregate kilns to control emissions of organic hazardous air pollutants other than dioxins and furans. Dioxins and furans are controlled by separate emission standards. See discussion in Part Four, Section IV.A. The DRE standard is necessary, as previously discussed, to complement the carbon monoxide and hydrocarbon emission standards, which also control these hazardous air pollutants.

The standard requires 99.99 percent DRE for each principal organic hazardous constituent (POHC), except that 99.9999 percent DRE is required if specified dioxin-listed hazardous wastes are burned. These wastes—F020, F021, F022, F023, F026, and F027—are listed as RCRA hazardous wastes under part 261 because they contain high concentrations of dioxins.

a. What Is the MACT Floor for Existing Sources? Existing sources are currently subject to DRE standards under § 266.104(a) that require 99.99 percent DRE for each POHC, except that 99.9999 percent DRE is required if specified dioxin-listed hazardous wastes are burned. Accordingly, these standards represent MACT floor. Since all hazardous waste lightweight aggregate kilns must currently achieve these DRE standards, they represent floor control.

b. What Are Our Beyond-the-Floor Considerations for Existing Sources? Beyond-the-floor control would be a requirement to achieve a higher

percentage DRE, for example, 99.9999 percent DRE for POHCs for all hazardous wastes. A higher DRE could be achieved by improving the design, operation, or maintenance of the combustion system to achieve greater combustion efficiency.

Even though the 99.99 percent DRE floor is an existing RCRA standard, a substantial number of existing hazardous waste combustors are not likely to be routinely achieving 99.999 percent DRE, however, and most are not likely to be achieving 99.9999 percent DRE. Improvements in combustion efficiency will be required to meet these beyond-the-floor DREs. Improved combustion efficiency is accomplished through better mixing, higher temperatures, and longer residence times. As a practical matter, most combustors are mixing-limited and may not easily achieve 99.9999 percent DRE. For a less-than-optimum burner, a certain amount of improvement may typically be accomplished by minor, relatively inexpensive combustor modifications—burner tuning operations such as a change in burner angle or an adjustment of swirl—to enhance mixing on the macro-scale. To achieve higher DREs, however, improved mixing on the micro-scale may be necessary. This involves significant, energy intensive and expensive modifications such as burner redesign and higher combustion air pressures. In addition, measurement of such DREs may require increased spiking of POHCs and more sensitive stack sampling and analysis methods at added expense.

Although we have not quantified the cost-effectiveness of a beyond-the-floor DRE standard, it would not appear to be cost-effective. For reasons discussed above, the cost of achieving each successive order-of-magnitude improvement in DRE will be at least constant, and more likely increasing. Emissions reductions diminish substantially, however, with each order of magnitude improvement in DRE. For example, if a source were to emit 100 gm/hr of organic hazardous air pollutants assuming zero DRE, it would emit 10 gm/hr at 90 percent DRE, 1 gm/hr at 99 percent DRE, 0.1 gm/hr at 99.9 percent DRE, 0.01 gm/hr at 99.99 percent DRE, and 0.001 gm/hr at 99.999 percent DRE. If the cost to achieve each order of magnitude improvement in DRE is roughly constant, the cost-effectiveness of DRE decreases with each order of magnitude improvement in DRE. Consequently, we conclude that this relationship between compliance cost and diminished emissions reductions suggests that a beyond-the-floor standard is not warranted in light of the resulting, poor cost-effectiveness.

c. What Is the MACT Floor for New Sources? The single best controlled source, and all other hazardous waste lightweight aggregate kilns, are subject to the existing RCRA DRE standard under § 266.104(a). Accordingly, we adopt this standard of 99.99% DRE for most wastes and 99.9999% DRE for dioxin listed wastes as the MACT floor for new sources.

d. What Are Our Beyond-the-Floor Considerations for New Sources? As discussed above, although we have not quantified the cost-effectiveness of a more stringent DRE standard, diminishing emissions reductions with each order of magnitude improvement in DRE suggests that cost-effectiveness considerations would likely come into play. We conclude that a beyond-the-floor standard is not warranted.

Part Five: Implementation

I. How Do I Demonstrate Compliance with Today's Requirements?

If you operate a hazardous waste burning incinerator, cement kiln, or lightweight aggregate kiln, you are required to comply with the standards and requirements in today's rule at all times, with one exception. If you are not feeding hazardous waste to the combustion device and if hazardous waste does not remain in the combustion chamber, these rules do not apply under certain conditions discussed below. You must comply with all of the notification requirements, emission standards, and compliance and monitoring provisions of today's rule by the compliance date, which is three years after September 30, 1999. As referenced later, the effective date of today's rule is September 30, 1999. The compliance and general requirements of this rule are discussed in detail in the follow sections. Also, we have included the following time line that will assist you in determining when many of the notifications and procedures, discussed in the later sections of this part, are required to be submitted or accomplished.

A. What Sources Are Subject to Today's Rules?

Sources affected by today's rule are defined as all incinerators, cement kilns and lightweight aggregate kilns burning hazardous waste on, or following September 30, 1999. This definition is essentially the same as we proposed in the April 1996 NPRM. Comments, regarding this definition, suggested that there was confusion as to when and under what conditions you would be subject to today's hazardous waste MACT regulations. In this rule, we specify that once you are subject to today's regulations, you remain subject to these regulations until you comply with the requirements for sources that permanently suspend hazardous waste burning operations, as discussed later.

However, just because you are subject to today's regulations does not mean that you must comply with the emission standards or operating limits at all times. In later sections of today's rule, we identify those limited periods and situations in which compliance with today's emission standards and operating limits may not be required.

1. What Is an Existing Source?

Today's rule clarifies that existing sources are sources that were constructed or under construction on the publication date for our NPRM—April 19, 1996. This is consistent with the current regulatory definition of existing sources, but is different from the definition in our April 1996 NPRM. In the April 1996 NPRM, we defined existing sources as those burning hazardous waste on the proposal date (April 19, 1996) and defined new sources as sources that begin burning hazardous waste after the proposal date. Commenters note that the proposed definition of new sources is not consistent with current regulations found in 40 CFR part 63 or the Clean Air Act. Commenters also believe that our definition does not consider the intent of Congress, i.e., to require only those sources that incur significant costs during upgrade or modification to meet the most stringent new source emission standards. Commenters note that a large number of sources that are currently not burning hazardous waste could modify their combustion units to burn hazardous waste at a cost that would not surpass the reconstruction threshold and therefore they should not be required to meet the new source emission standards. Commenters suggest we use the statutory definition of an existing source found at section 112(a)(4) of the CAA and codified at 40 CFR 63.2. We agree with commenters and therefore adopt the definition of an existing source found at 40 CFR 63.2.

2. What Is a New Source?

Today's rule clarifies that new sources are those that commence construction or meet the definition of a reconstructed source following the proposal date of April 19, 1996. In the proposal, we define new sources as those that newly begin to burn hazardous waste after the proposal date. However, as noted earlier, commenters object to the

proposed definition because of conflicts with the statutory language of the CAA and the current definition found in MACT regulations. In the CAA regulations, we define new sources as those that are newly constructed or reconstructed after a rule is proposed. Here again, we agree with commenters and adopt the current regulatory definition of new sources. We also adopt the CAA definition of reconstruction. This definition also is generally consistent with the RCRA definition of reconstruction and should avoid any confusion regarding what standards apply to reconstructed sources.

B. How Do I Cease Being Subject to Today's Rule?

Once you become an affected source as defined in § 63.2, you remain an affected source until you: (1) Cease hazardous waste burning operations, (*i.e.*, hazardous waste is not in the combustion chamber); (2) notify the Administrator, and other appropriate regulatory authorities, that you have ceased hazardous waste burning operations; and (3) begin complying with other applicable MACT standards and regulations, if any, including notifications, monitoring and performance tests requirements.

If you permanently stop burning hazardous waste, the RCRA regulations require you to initiate closure procedures within three months of the date you received your last shipment of hazardous waste, unless you have obtained an extension from the Administrator. The requirement to initiate closure pertains to your RCRA status and should not be a barrier to operational changes that affect your regulatory status under today's MACT requirements. This approach is a departure from the requirements proposed in the April 1996 NPRM, but is consistent with the approach we identified in the May 1997 NODA.

Once you permanently stop burning hazardous waste, you may only begin burning hazardous waste under the procedures outlined for new or existing sources that become affected sources following September 30, 1999. See later discussion.

C. What Requirements Apply If I Temporarily Cease Burning Hazardous Waste?

Under today's rule, if you temporarily cease burning hazardous waste for any reason, you remain subject to today's requirements as an affected source. However, even as an affected source, you may not have to comply with the emission standards or operating limits of today's rule when hazardous waste is not in the combustion chamber. Today's standards, associated operating parameter limits, and monitoring requirements are applicable at all times unless hazardous waste is not in the combustion chamber and either: (1) You elect to comply with other MACT standards that would be applicable if you were not burning hazardous waste (e.g. the nonhazardous waste burning Portland Cement Kiln MACT, the nonhazardous waste burning lightweight aggregate kiln MACT (Clay Products Manufacturing), or the Industrial Incinerator MACT); or (2) you are in a startup, shutdown, or malfunction mode of operation. We note that until these alternative MACT standards are promulgated, you need to comply only with other existing applicable air requirements if any. This approach is consistent with the current RCRA regulatory approach for hazardous waste combustion sources, but differs from our April 1996 proposed approach.

In our April 1996 NPRM, we proposed that sources always be subject to all of the proposed regulatory requirements, regardless of whether hazardous waste was in the combustion chamber. Commenters question the legitimacy of this requirement because the requirement was: (1) more stringent than current requirements; (2) not based on CAA statutory authority; and (3) contrary to current allowances under current MACT general provisions.

In response, we agree with commenters on issues (1) and (3) above. However, we disagree with commenters on issue number (2). The CAA does not allow sources to be subject to multiple MACT standards simultaneously. Because current CAA regulations also allow sources to modify their operations such that they can become subject to different MACT rules so long as they provide notification to the Administrator, our proposed approach appears to further complicate a situation that it was intended to resolve. One of the main reasons we proposed to subject hazardous waste burning sources to the final standards at all times was to eliminate the ability of sources to arbitrarily switch between regulation as a hazardous waste burning source and regulation as a nonhazardous waste burning source. We were concerned about the compliance implications associated with numerous notifications to the permitting authority to govern operations that may only occur for a short period of time. However, our concern appears unfounded because the MACT general provisions currently allow sources to change their regulatory status following notification, and we cannot achieve this goal without restructuring the entire MACT program. Therefore, consistent with the current program, we adopt an approach that allows a source to comply with alternative compliance requirements, while remaining subject to today's rule. This regulatory approach eliminates the reporting requirements and compliance determinations we intended to avoid with our proposed approach, while preserving the essence of the current RCRA approach, which applies more stringent emissions standards when hazardous waste is in the combustor.

1. What Must I Do to Comply with Alternative Compliance Requirements?

If you wish to comply with alternative compliance requirements, you must: (1) Comply with all of the applicable notification requirements of the alternative regulation; (2) comply with all the monitoring, record keeping and testing requirements of the alternative regulation; (3) modify your Notice Of Compliance (or Documentation of Compliance) to include the alternative mode(s) of operation; and (4) note in your operating record the beginning and end of each period when complying with the alternative regulation.

If you intend to comply with an alternative regulation for longer than three months, then you also must comply with the RCRA requirements to initiate RCRA closure. You may be able to obtain an extension of the date you are required to begin RCRA closure by submitting a request to the Administrator.

2. What Requirements Apply If I Do Not Use Alternative Compliance Requirements?

If you elect not to use the alternative requirements for compliance during periods when you are not feeding hazardous waste, you must comply with all of the operating limits, monitoring requirements, and emission standards of this rule at all times.[177] However, if you are a kiln operator, you also may be able to obtain and comply with the raw material variance discussed later.

D. What Are the Requirements for Startup, Shutdown and Malfunction Plans?

Sources affected by today's rule are subject to the provisions of 40 CFR 63.6 with regard to startup, shutdown and malfunction plans. However, the plan applies only when hazardous waste is

[177] The operating requirements do not apply during startup, shutdown, or malfunction provided that hazardous waste is not in the combustion chamber. See the discussion below in the text.

not in the combustion chamber. If you exceed an operating requirement during startup, shutdown, or malfunction when hazardous waste is in the combustion chamber, your exceedance is not excused by following your plan. If you exceed an operating requirement during startup, shutdown, or malfunction when hazardous waste is not in the combustion chamber, you must follow your startup, shutdown, and malfunction plan to come back into compliance as quickly as possibly, unless you have elected to comply with the requirements of alternative section 112 or 129 regulations that would apply if you did not burn hazardous waste. Failure to comply with the operating requirements to follow your startup, shutdown, and malfunction plan during the applicable periods is representative of a violation and may subject you to appropriate enforcement action.

In the April 1996 NPRM (see 63 FR at 17449), we proposed that startup, shutdown, and malfunction plans would not be applicable to sources affected by the proposed rule because affected sources must be in compliance with the standards at all times hazardous waste is in the combustion chamber. We reasoned that hazardous waste could not be fired unless you were in compliance with the emission standards and operating requirements, and stated that the information contained in the plan and the purpose of the plan was not intended to apply to sources affected by this rule.

In response, commenters state that startup, shutdown, and malfunction plans are appropriate for hazardous waste burning sources because malfunctioning operations are going to occur, and these plans are designed to reestablish compliant or steady state operations as quickly as possible. Furthermore, commenters maintain that because sources must prepare and follow facility-specific plans to address situations that could lead to increased emissions, rather than just note such an occurrence in the operating record, the public and we are better assured that the noncompliant operations are being remedied rather than awaiting for an after-the-fact enforcement action. Commenters also note that hazardous waste burning sources are no different than other MACT sources who are required to use such plans.

After considering comments, we agree with commenters that startup, shutdown, and malfunction plans are valuable compliance tools and should be applicable to hazardous waste burning sources. However, we are concerned that some sources may attempt to use startup, shutdown, and malfunction plans to circumvent enforcement actions by claiming they were never out of compliance if they followed their plan. Therefore, we restrict the applicability of startup, shutdown, and malfunction plans to periods when hazardous waste is not in the combustion chamber. This restriction addresses the concern that operations under startup, shutdown, and malfunction could lead to increased emissions of hazardous air pollutants.

We considered whether to specifically prohibit sources from feeding hazardous waste during periods of startup and shutdown. However, we decided not to adopt this requirement because of a potential regulatory problem. The requirement could have inadvertently subjected sources that experience unscheduled shutdowns to enforcement action if hazardous waste remained in the combustion chamber during the shutdown process even if operating requirements were not exceeded. Additionally, we decided that the prohibition was unnecessary because performance test protocols restrict the operations of all sources when determining operating parameter limits. The following factors are pertinent in this regard: (1) Sources are required to be in compliance with their operating parameter limits at all times hazardous waste is in the combustion chamber; (2) operating parameter limits are determined through a performance test which must be performed under steady-state conditions (see § 63.1207(g)(1)(iii)); and (3) periods of startup and shutdown are not steady state conditions and therefore operating parameter limits determined through performance testing would not be indicative of those periods. Accordingly, burning hazardous waste during startup or shutdown would significantly increase the potential for a source to exceed an operating parameter limit, and we expect that sources would be unwilling to take that chance as a practical matter.

E. What Are the Requirements for Automatic Waste Feed Cutoffs?

As proposed, you must operate an automatic waste feed cutoff system that immediately and automatically cuts off hazardous waste feed to the combustion device when:

(1) Any of the following are exceeded: Operating parameter limits specified in § 63.1209; an emission standard monitored by a continuous emissions monitoring system; and the allowable combustion chamber pressure; (2) The span value of any continuous monitoring system, except a continuous emissions monitoring system, is met or exceeded; (3) A continuous monitoring system monitoring an operating parameter limit under § 63.1209 or emission level malfunctions; or (4) Any component of the automatic waste feed cutoff system fails.

These requirements are provided at § 63.1206(c)(3). The system must be fully functional on the compliance date and interlocked with the operating parameter limits you specify in the Document of Compliance (as discussed later) as well as the other parameters listed above.

Also as proposed, after an automatic waste feed cutoff, you must continue to route combustion gases through the air pollution control system and maintain minimum combustion chamber temperature as long as hazardous waste remains in the combustion chamber. These requirements minimize emissions of regulated pollutants, including organic hazardous air pollutants, that could result from a perturbation caused by the waste feed cutoff. Additionally, you must continue to calculate all rolling averages and cannot restart feeding hazardous waste until all operating limits are within allowable levels.

Additionally, as currently required for BIFs, we proposed that the automatic waste feed cutoff system and associated alarms must be tested at least once every seven days. This must be done when hazardous waste is burned to verify operability, unless you document in the operating record that weekly inspections will unduly restrict or upset operations and that less frequent inspections will be adequate. At a minimum, you must conduct operational testing at least once every 30 days.

Commenters express the following concerns with the proposed automatic waste feed cutoff requirements: (1) Violations of the automatic waste feed cutoff linked operating parameters should not constitute a violation of the associated emission standard; (2) apparent redundancy exists between the proposed MACT requirements with the current RCRA requirements; (3) the proposed automatic waste feed cutoff requirements are inappropriate for all sources; and (4) uncertainty exists about how "instantaneous" is defined with regard to the nature of the automatic waste feed cutoff requirement.

We address issue (1) later in this section. With respect to issue (2), our permitting approach (*i.e.*, a single CAA title V permit to control all stack emissions) minimizes the potential redundancy of two permitting programs.

In response to issue (3), we acknowledge that not all sources may be capable of setting operating limits or

continuously monitoring all of the prescribed operating parameters due to unique design characteristics inherent to individual units. However, you may take advantage of the provisions found in § 63.8(f) which allow you to request the use of alternative monitoring techniques. See also § 63.1209(g)(1).

For issue (4), commenters express concern that requiring an immediate, instantaneous, and abrupt cutoff of the entire waste feed can cause perturbations in the combustion system that could result in exceedances of additional operating limits. We agree with commenters that a ramping down of the waste feedrate could preclude this problem in many cases and in the final rule allow a one-minute ramp down for pumpable wastes. To ensure that your ramp down procedures are bona fide and not simply a one-minute delay ending in an abrupt cutoff, you must document your ramp down procedures in the operating and maintenance plan. The procedures must specify that the ramp down begins immediately upon initiation of automatic waste feed cutoff and provides for a gradual ramp down of the hazardous waste feed. Note that if an emission standard or operating limit is exceeded during the ramp down, you nonetheless have failed to comply with the emission standards or operating requirements. The ramp down is not applicable, however, if the automatic waste feed cutoff is triggered by an exceedance of any of the following operating limits: minimum combustion chamber temperature; maximum hazardous waste feedrate; or any hazardous waste firing system operating limits that may be established for your combustor on a site-specific basis. This is because these operating conditions are fundamental to proper combustion of hazardous waste and an exceedance could quickly result in an exceedance of an emission standard. We restrict the ramp down to pumpable wastes because: (1) Solids are often fed in batches where ramp down is not relevant (*i.e.*, ramp down is only relevant to continuously fed wastes); and (2) incinerators burning solids also generally burn pumpable wastes and ramping down on pumpables only should preclude the combustion perturbations that could occur if all wastes were abruptly cutoff.

Finally, with respect to issue number (1), if you exceed an operating parameter limit while hazardous waste is in the combustion chamber, then you have failed to ensure compliance with the associated emission standard. Accordingly, appropriate enforcement action on the exceedance can be initiated to address the exceedance. This enforcement process is consistent with current RCRA enforcement procedures regarding exceedances of operating parameter limits. However, as commenters note, we acknowledge that an exceedance of an operating parameter limit does not necessarily demonstrate that an associated emissions standard is exceeded. Nevertheless, in general, an exceedance of an operating parameter limit in a permit or otherwise required is an actionable event for enforcement purposes.

Operating parameter limits are developed through performance tests that successfully demonstrate compliance with the standards. If a source exceeds an operating limit set during the performance test to show compliance with the standard, the source can no longer assure compliance with the associated standard. Furthermore, these operating parameter limits appear in enforceable documents, such as your NOC or your title V permit.

F. What Are the Requirements of the Excess Exceedance Report?

In today's rule, we finalize the requirement to report to the Administrator when you incur 10 exceedances of operating parameter limits or emissions standards monitored with a continuous emissions monitoring system within a 60 day period. See § 63.1206(c)(3)(vi). If a source has 10 exceedances within the 60 day period, the 60 day period restarts after the notification of the 10th exceedance. This provision is intended to identify sources that have excess exceedances due to system malfunction or performance irregularities. This notification requirement both highlights the source to regulatory officials and provides an added impetus to the facility to correct the problem(s) that may exist to limit future exceedances. For example, a source that must submit an excess exceedance report may be unable to operate under its current operating limits, which suggests that the source may need to perform a new comprehensive performance test to establish more appropriate operating limits.

We discussed this provision in the April 1996 NPRM. Some commenters may have misunderstood our proposal while others felt that 10 exceedances in sixty days was not a feasible number to set the reporting limit. Other commenters state that an industry wide MACT-like analysis is necessary to identify an achievable or appropriate number of exceedances upon which to set the reporting limit.

We disagree with such comments. A MACT-like analysis is not called for in this case because this requirement is not an emission standard. This is a notification procedure that is a compliance tool to identify sources that cannot operate routinely in compliance with their operating parameter limits and emissions standards monitored with a continuous emissions monitoring system. Ideally, all sources should operate in compliance with all the standards and operating parameter limits at all times. Because, in the past, sources have been able to exceed their operating limits without having to notify the Agency, this does not mean that we condone, expect, or are unconcerned with such activity. In fact, the main reason we require this notification is because such activity exists to the current extent and because the Regions and States have identified it as a problem. We select 10 exceedances in sixty days as the value that triggers reporting after discussions with Regional and State permit writers. Our discussions revealed that many hazardous waste combustion sources are required to notify regulatory officials following a single exceedance of an operating limit, while others don't have any reporting requirements linked to exceedances. Regions and States noted that because there is no current regulatory requirement for exceedance notifications, it is very difficult to require such notifications on a site-specific basis. Following these discussions, we contemplated requiring a notification following a single exceedance, but decided that the such a reporting limit might unnecessarily burden regulatory officials with reports from facilities that have infrequent exceedances. Therefore, our approach of 10 exceedances in a 60 day period is a reasonably implementable limit and is not overly burdensome. Adopting this approach achieves an appropriate balance between burden on facilities and regulators and the need to identify underlying operational problems that may present unacceptable risks to the public and environment.

To reiterate, this provision applies to any 10 exceedances of operating parameter limits or emission standards monitored with a continuous emissions monitoring system.

G. What Are the Requirements for Emergency Safety Vent Openings?

In today's rule, we finalize requirements that govern the operation of emergency safety vents. See § 63.1206(c)(4). These requirements: clarify the regulatory status of emergency safety vent events; require

development of an emergency safety vent operating plan that specifies procedures to minimize the frequency and duration of emergency safety vent openings; and specify procedures to follow when an emergency safety vent opening occurs.

Key requirements regarding emergency safety vent openings include:

(1) Treatment of combustion gases—As proposed, you must route combustion system off-gases through the same emission control system used during the comprehensive performance test. Any bypass of the pollution control system is considered an exceedance of operating limits defined in the Documentation of Compliance (DOC) or Notification of Compliance (NOC);

(2) Emergency safety vent operating plan—As proposed, if you use an emergency safety vent in your system design, you must develop and submit with the DOC and NOC an emergency safety vent operating plan that outlines the procedures you will take to minimize the frequency and duration of emergency safety vent openings and details the procedure you will follow during and after an emergency safety vent opening; and

(3) Emergency safety vent reporting requirements—As proposed, if you operate an emergency safety vent, you must submit a report to the appropriate regulatory officials within five days of an emergency safety vent opening. In that report, you must detail the cause of the emergency safety vent opening and provide information regarding corrective measures you will institute to minimize such events in the future.

Commenters on the April 1996 NPRM (61 FR at 17440) state that emergency safety vent openings are safety devices designed to prevent catastrophic failures, safeguard the unit and operating personnel from pressure excursions and protect the air pollution control train from high temperatures and pressures. They suggest that restricting these operations is contrary to common sense. Furthermore, they state that emergency safety vent openings are most often due to local power outages and fluctuations in water flows going to the air pollution equipment. Commenters believe that emergency safety vent openings should not be considered violations and that not every emergency safety vent opening should be reportable for a variety of reasons including:

—Emergency safety vent openings have not been shown to be acutely hazardous. A study finds that they will not have any short-term impact on the health of workers on-site or residents of the nearby off-site community.
—Proper use of emergency safety vent systems minimizes the potential for impacts on operators and the neighboring public.
—Many emergency safety vents are downstream of the secondary combustion chamber and thus have low organic emissions.
—Some facilities have emergency safety vents connected to the air pollution control system and should be considered in compliance as long as the continuous emissions monitoring systems monitoring data does not indicate an exceedance.

Commenters propose several alternatives:

—Recording emergency safety vent openings (including the time, duration and cause of each event) in the operating record, available to the Administrator, or any authorized representative, upon request.
—Making emergency safety vent openings a part of startup, shutdown, malfunction and abatement plans.
—Reporting openings that occurs more frequently than once in any 90 day period, whereupon the Administrator may require corrective measures.
—Reporting only emergency safety vent openings in excess of 10 in a 60 day period.
—Conditions relating to an emergency safety vent operation should be a part of the site-specific permit.
—Rely on the present RCRA permit process which provides the opportunity for permit writers and hazardous waste combustion device owner/operators to review emergency safety vent system designs.

We agree that emergency safety vents are necessary safety devices for some incinerator designs that are intended to safeguard employees and protect the equipment from the dangers associated with system over-pressures or explosions. However, simply because emergency safety vents are necessary safety devices for some incinerator designs in the event of a major malfunction does not mean that their routine use is acceptable. We cannot overlook an event when combustion gases are emitted into the environment prior to proper treatment by the pollution control system. Therefore, an emergency safety vent opening is evidence that compliance is not being achieved. Nonetheless, we expect sources to continue to use safety vents when the alternative could be a catastrophic failure and substantial liability even though opening the vent is evidence of failure to comply with the emission standards.

Today's requirements are based on the fundamental need to ensure protection of human health and the environment against unquantified and uncontrolled hazardous air pollutant emissions. We do not agree that a change in the proposed emergency safety vent reporting requirement is warranted. These events are indicative of serious operational problems, and each event should be reported and investigated to reduce the potential of future similar events. As for including the emergency safety vent operating plan in the source-specific startup, shutdown, and malfunction plan, we see no reason to discourage that practice provided that a combined plan specifically addresses the events preceding and following an emergency safety vent opening.

H. What Are the Requirements for Combustion System Leaks?

You must prevent leaks of gaseous, liquid or solid materials from the combustion system when hazardous waste is being fed to or remains in the combustion chamber. To demonstrate compliance with this requirement you must either: (1) Maintain the combustion system pressure lower than ambient pressure at all times; (2) totally enclose the system; or (3) gain approval from the Administrator to use an alternative approach that provides the same level of control achieved by options 1 and 2.

Currently, these requirements exist for all sources under RCRA regulations. Many commenters question whether they were capable of meeting this requirement for various technical reasons. We acknowledge that certain situations may exist that prevent or limit a source from instantaneously monitoring pressure inside the combustion system, but in such situations, we can approve alternative techniques (under § 63.1209(g)(1)) that allow sources to achieve the objectives of the requirements. Because this requirement is identical to the current RCRA requirements, and because we have specifically provided alternative techniques to demonstrate compliance, modifications to this provision are not warranted.

I. What Are the Requirements for an Operation and Maintenance Plan?

You must prepare and at all times operate according to a operation and maintenance plan that describes in detail procedures for operation, inspection, maintenance, and corrective measures for all components of the combustor, including associated pollution control equipment, that could affect emissions of regulated hazardous

air pollutants. The plan must prescribe how you will operate and maintain the combustor in a manner consistent with good air pollution control practices for minimizing emissions at least to the levels achieved during the comprehensive performance test. You must record the plan in the operating record. See § 63.1206(c)(7)(i).

In addition, if you own or operate a hazardous waste incinerator or hazardous waste burning lightweight aggregate kiln equipped with a baghouse, your operation and maintenance plan for the baghouse must include a prescribed inspection schedule for baghouse components and use of a bag leak detection system to identify malfunctions. This baghouse operation and maintenance plan must be submitted to the Administrator with the initial comprehensive performance test for review and approval. See § 63.1206(c)(7)(ii).

We require an operation and maintenance plan to implement the provisions of § 63.6(e). That paragraph requires you to operate and maintain your source in a manner consistent with good air pollution control practices for minimizing emissions. That paragraph, as all Subpart A requirements, applies to all MACT sources unless requirements in the subpart for a source category state otherwise. In addition, § 63.6(e)(2) states that the Administrator will determine whether acceptable operation and maintenance procedures are used by reviewing information including operation and maintenance procedures and records. Thus, paragraph (e)(2) effectively requires you to develop operation and maintenance procedures. Consequently, explicitly requiring you to develop an operation and maintenance plan is a logical outgrowth of the proposed rule.

Similarly, although we did not prescribe baghouse inspection requirements or require a bag leak detection system at proposal for incinerators and lightweight aggregate kilns, this is a logical outgrowth of the proposed rule. Section 63.6(e) requires sources to operate and maintain emission control equipment in a manner consistent with good air pollution control practices for minimizing emissions. Inspection of baghouse components is required to provide adequate maintenance, and a bag leak detection system is a state-of-the-art monitoring system that identifies major baghouse malfunctions. Absent use of a particulate matter CEMS or opacity monitor, use of a bag leak detection system is an essential monitoring approach to ensure that the baghouse continues to operate in a manner consistent with good air pollution control practices. Bag leak detection systems are required under the MACT standards for secondary lead smelters. See § 63.548. We have also proposed to require them as MACT requirements for several other source categories including primary lead smelters (see 63 FR 19200 (April 17, 1998)) and primary copper smelters (see 63 FR 19581 (April 20, 1998)). In addition, we have published a guidance document on the installation and use of bag leak detection systems: USEPA, "Fabric Filter Bag Leak Detection," September 1997, EPA-454/R-98-015. Thus, although not explicitly required at proposal, a requirement to use bag leak detection systems is a logical outgrowth of the (proposed) requirements of § 63.6(e).

We are not prescribing a schedule for inspection of baghouse components or requiring a bag leak detection system for cement kilns because cement kilns must use a continuous opacity monitoring system (COMS) to demonstrate compliance with an opacity standard. A COMS is a better indicator of baghouse performance than a bag leak detection system. We could not use COMS for incinerators and lightweight aggregate kilns, however, because we do not have data to identify an opacity standard that is achievable by MACT sources (i.e., sources using MACT control and achieving the particulate matter standard).

We are not specifying the type of sensor that must be used other than: (1) The system must be certified by the manufacturer to be capable of detecting particulate matter emissions at concentrations of 1.0 milligram per actual cubic meter; and (2) the sensor must provide output of relative particulate matter loadings. Several types of instruments are available to monitor changes in particulate emission rates for the purpose of detecting fabric filter bag leaks or similar failures. The principles of operation of these instruments include electrical charge transfer and light scattering. The guidance document cited above applies to charge transfer monitors that use triboelectricity to detect changes in particle mass loading, but other types of monitors may be used. Specifically, opacity monitors may be used.

The economic impacts of requiring fabric filter bag leak detection systems are minimal. These systems are relatively inexpensive. They cost less than $11,000 to purchase and install. Further, we understand that most hazardous waste burning lightweight aggregate kilns are already equipped with triboelectric sensors. Finally, there are few hazardous waste incinerators that are currently equipped with fabric filters.

II. What Are the Compliance Dates for this Rule?

A. How Are Compliance Dates Determined?

In today's rule, as with other MACT rules, we specify the compliance date and then provide you additional time to demonstrate compliance through performance testing. Generally, you must be in compliance with the emission standards on September 30, 2002 unless you are granted a site-specific extension of the compliance date of up to one year. By September 30, 2002, you must complete modifications to your unit and establish preliminary operating limits, which must be included in the Documentation of Compliance (DOC) and recorded in the operating record. Following the compliance date you have up to 180 days to complete the initial comprehensive performance test and an additional 90 days to submit the results of the performance test in the Notification of Compliance (NOC). In the NOC, you also must certify compliance with applicable emission standards and define the operating limits that ensure continued compliance with the emission standards.

In the April 1996 NPRM, we proposed that sources comply with all the substantive requirements of the rule on the compliance date. This required sources to conduct their performance test as well as submit results in the NOC by the compliance date. The compliance date discussed in the April 1996 NPRM contained a statutory limitation of three years following the effective date of the final rule (*i.e.*, the publication date of the final rule) with the possibility of a site-specific extension of up to one year for the installation of controls to comply with the final standards, or to allow for waste minimization reductions.

In the May 1997 NODA, we acknowledged that the April 1996 NPRM definition of compliance date and our approach to implementation created a number of unforseen difficulties (see 63 FR at 24236). Commenters note that the proposed compliance date definition and the ramifications of noncompliance create the potential for an unnecessarily large number of source shut-downs due to an insufficient period to perform all the required tasks. Commenters recommend we follow the general provisions applicable to all MACT regulated sources, which allow sources to demonstrate compliance through

performance testing and submission of emission test results up to 270 days following the compliance date.

In the May 1997 NODA, we outlined an approach that allowed facilities to use the Part 63 general approach, which requires sources to complete performance testing within 180 days of the compliance date and submit test results 90 days after completing the performance test.[178] Today, we adopt this approach to foster consistent implementation of this rule as a CAA regulation.

Your individual dates for: (1) Compliance; (2) comprehensive performance testing; (3) submittal of test results; and (4) submittal of your NOC and title V permit requests depend on whether you were an existing source on April 19, 1996. Compliance dates for existing and new sources are discussed in the following two subsections.

B. What Is the Compliance Date for Sources Affected on April 19, 1996?

The compliance date for all affected sources constructed, or commencing construction or reconstruction before April 19, 1996 is September 30, 2002.

C. What Is the Compliance Date for Sources That Become Affected After April 19, 1996?

If you began construction or reconstruction after April 19, 1996, your compliance date is the latter of September 30, 1999 or the date you commence operations. If today's final emission standards are less stringent or as stringent as the standards proposed on April 19, 1996, you must be in compliance with the 1996 proposed standards upon startup. If today's final standards are more stringent than the proposed standards, you must be in compliance with the more stringent standards by September 30, 2002.

III. What Are the Requirements for the Notification of Intent to Comply?

For the reader's convenience, we summarize here the Notice of Intent to Comply (NIC) requirements finalized in the "fast-track" rule of June 19, 1998. (See 63 FR at 33782.)

The NIC requires you to prepare an implementation plan that identifies your intent to comply with the final rule and the basic means by which you intend to do so. That plan must be released to the public in a public forum and formally submitted to the Agency. The notice of intent certifies your intentions—either to comply or not to comply—and identifies milestone dates that measure your progress toward compliance with the final emission standards or your progress toward closure, if you choose not to comply. Prior to submitting the NIC to the regulatory Agency, you must provide notice of a public meeting and conduct an informal public meeting with your community to discuss the draft NIC and your plans for achieving compliance with the new standards.

We have redesignated the existing NIC provisions to meld them into the appropriate sections of subpart EEE. We have also revised the regulatory language to include references to the new provisions promulgated today. See Part Six, Section IX of today's preamble.

IV. What Are the Requirements for Documentation of Compliance?

A. What Is the Purpose of the Documentation of Compliance?

The purpose of the Documentation of Compliance [179] (DOC) is for you to certify by the compliance date that: (1) You have made a good faith effort to establish limits on the operating parameters specified in § 63.1209 that you believe ensure compliance with the emissions standards; (2) required continuous monitoring systems are operational and meet specifications; and (3) you are in compliance with the other operating requirements. See § 63.1211(d). This is necessary because all sources must be in compliance by the compliance date even though they are not required to demonstrate compliance, through performance testing, until 180 days after the compliance date. To fulfill the requirements of the DOC, you must place it in the operating record by the compliance date, September 30, 2002. (See compliance dates in Section II above.) Information that must be in the DOC includes all information necessary to determine your compliance status (e.g., operating parameter limits; functioning automatic waste feed cutoff system). All operating limits identified in the DOC are enforceable limits. However, if these limits are determined, after the initial comprehensive performance test, to have been inadequate to ensure compliance with the MACT standards, you will not be deemed to be out of compliance with the MACT emissions standards, if you complied with the DOC limits.[180]

B. What Is the Rationale for the DOC?

In the May 1997 NODA, we discussed the concept of the precertification of compliance (Pre-COC). The discussion required sources to precertify their compliance status on the compliance date by requiring them to submit a notification to the appropriate regulatory agency. This notification would detail the operating limits under which a source would operate during the period following the compliance date, but before submittal of the initial comprehensive performance test results in the Notification of Compliance.

Commenters question this provision since the Pre-COC operating limits would be effective only for the 270 days following the compliance date. Other commenters support the Pre-COC requirements provided the process is focused, straightforward, and limited to the minimum operating parameters necessary to document compliance. Commenters also stress that the Agency needed to specify the requirements of the prenotification, using appropriate sections of 40 CFR 266.103(b) and Section 63.9 when developing the specific regulatory requirements. In addition, commenters suggest that the Agency clarify the relationship between the Pre-COC and the title V permit, and indicate how or if the Pre-COC operating limits would be placed in the title V permit.

Other commenters state that the rationale underlying the Pre-COC is faulty because sources would remain subject to the RCRA permit conditions until the NOC is submitted or until the title V permit is issued, which was our proposed approach to permitting at that time. Therefore, the Agency's concern that sources could be between regulatory regimes is not relevant. Commenters also state that Pre-COC requirements would be resource intensive and a needless exercise that diverted time and attention from preparing to come into compliance with MACT standards.

The DOC requirements and process adopted today provide the Agency and public a sound measure of assurance

[178] The general provisions of part 63 allow for 180 days after the compliance date to conduct a performance test and 60 days to submit its results to the appropriate regulatory agency. However, as commenters note, dioxin/furan analyses can require 90 days to complete. Therefore, the time allowed for submission of test results should be extended to 90 days, increasing the total time following the compliance date to 270 days. We agree with commenters and increase the time allowed for submission of test results from 60 to 90 days.

[179] We renamed the proposed Precertification of Compliance as the Documentation of Compliance to avoid any confusion with the RCRA requirement of similar name.

[180] Once you determine that you failed to demonstrate compliance during the performance test, all monitoring data is subject to potential case-by-case use as credible evidence to show noncompliance following that determination. Therefore, you could potentially find yourself in noncompliance for the period which the DOC limits were in effect following that determination, but before submission of the NOC.

that, on the compliance date, combustion sources are operated within limits that should ensure compliance with the MACT standards and protection to human health and the environment. We agree that operating limits in the DOC will be in effect only for a short period of time and that affected sources will not be between regulatory regimes at any time. Given the relatively short period of time the DOC conditions will be in effect, however, we chose for the final rule not to specify whether the conditions need to be incorporated into a title V permit and do not require the permitting authority to do so. We provide flexibility for agencies implementing title V programs to determine the appropriate level of detail to include in the permit, thereby allowing them to minimize the potential need for permit revisions. In addition, we do not require that the DOC be submitted to the permitting authority, to avoid burdening the permitting agency with unnecessary paper work during the period that they are reviewing site-specific performance test plans. In today's rule, we better define the period during which the DOC applies by specifying that the DOC is superseded by the NOC upon the postmark date for submittal of the NOC. Once you mail the NOC, its contents become enforceable unless and until superseded by test results submitted within 270 days following subsequent performance testing. This approach provides clarity on when the NOC supersedes the DOC.

C. What Must Be in the DOC?

You must complete your site-specific DOC and place it in your operating record by the compliance date. The DOC must contain all of the information necessary to determine your compliance status during periods of operation including all operating parameter limits. You must identify the DOC operating limits through the use of available data and information. If your unit requires modification or upgrades to achieve compliance with the emission standards, you can base this judgment on results of shakedown tests and/or manufacturers assertions or specifications. If your unit does not require modifications or upgrades to meet the emission standards of today's rule, you can develop the operating limits through analysis of previous performance tests or knowledge of the performance capabilities of your control equipment.

Your limitations on operating parameters must be based on an engineering evaluation prepared under your direction or supervision in accordance with a system designed. This evaluation must ensure that qualified personnel properly gathered and evaluated the information and supporting documentation, and considering at a minimum the design, operation, and maintenance characteristics of the combustor and emissions control equipment, the types, quantities, and characteristics of feedstreams, and available emissions data.

This requirement should not involve a significant effort because your decisions on whether to upgrade and modify your units will be based on the current performance of your control equipment and the performance capabilities of new equipment you purchase. We expect that, by the compliance date, you will have an adequate understanding of your unit's capabilities, given the three years to develop this expertise. Therefore, by the compliance date, you are expected to identify operating limits that are based on technical or engineering judgment that should ensure compliance with the emission standards.

V. What Are the Requirements for MACT Performance Testing?

A. What Are the Compliance Testing Requirements?

Today's final rule requires two types of performance testing to demonstrate compliance with the MACT emission standards: Comprehensive and confirmatory performance testing. See § 63.1207. The purpose of comprehensive performance testing is to demonstrate compliance and establish operating parameter limits. You must conduct your initial comprehensive performance tests by 180 days (i.e., approximately six months) after your compliance date. You must submit results within 90 days (i.e., approximately 3 months) of completing your comprehensive performance test. If you fail a comprehensive performance test, you must stop burning hazardous waste until you can demonstrate compliance with today's MACT standards. Comprehensive performance testing must be repeated at least every five years, but may be required more frequently if you change operations or fail a confirmatory performance test.

The purpose of confirmatory performance tests is to confirm compliance with the dioxin/furan emission standard during normal operations. You must conduct confirmatory performance tests midway between comprehensive performance tests. Confirmatory performance tests may be conducted under normal operating conditions. If you fail a confirmatory performance test, you must stop burning hazardous waste until you demonstrate compliance with the dioxin/furan standard by conducting a comprehensive performance test to establish revised operating parameter limits.

The specific requirements and procedures for these two performance tests are discussed later in this section. In addition, this section discusses the interaction between the RCRA permitting process and the MACT performance test.

1. What Are the Testing and Notification of Compliance Schedules?

Section 63.7 of the CAA regulations contains the general requirements for testing and notification of compliance. In today's rule, we adopt some § 63.7 requirements without change and adopt others with modifications. As summarized earlier, you must commence your initial comprehensive performance test within 180 days after your compliance date, consistent with the general § 63.7 requirements. You must complete testing within 60 days of commencement, unless a time extension is granted. This requirement is necessary because testing and notification of compliance deadlines are based on the date of commencement or completion of testing. Those deadlines could be meaningless if a source had unlimited time to complete testing. Although we propose to require testing to be completed within 30 days of commencement, commenters state that unforeseen events could occur (e.g., system breakdown causing extensive repairs; loss of samples from breakage of equipment or other causes requiring additional test runs) that could extend the testing period beyond normal time frames. We concur, and provide for a 60-day test period as well as a case-by-case time extension that may be granted by permit officials if warranted because of problems beyond our control.

Additionally, you must submit comprehensive performance test results to the Administrator within 90 days of test completion, unless a time extension is granted. We are allowing an additional 30 days for result submittal beyond the §§ 63.7(g) and 63.8(e)(5) 60-day deadlines because the dioxin/furan analyses required in today's rule may take this additional time to complete. We also are including a provision for a case-by-case time extension in the final rule because commenters express concern that the limited laboratory facilities nationwide may be taxed by the need to handle analyses simultaneously for many hazardous

waste combustors. The available analytical services may not be able to handle the workload, that could cause some sources to miss the proposed 90-day deadline. We concur with commenters' concerns and have added a provision to allow permit officials to grant a case-by-case time extension, if warranted.

Test results must be submitted as part of the notification of compliance (NOC) submitted to the Administrator under §§ 63.1207(j) and 63.1210(d) documenting compliance with the emission standards and continuous monitoring system requirements, and identifying applicable operating parameter limits. These provisions are similar to §§ 63.7(g) and 63.8(e)(5), except that the NOC must be postmarked by the 90th day following the completion of performance testing and the continuous monitoring system performance evaluation.

Overall, the initial NOC must be postmarked within 270 days (i.e., approximately nine months) after your compliance date. You must initiate subsequent comprehensive performance tests within 60 months (i.e., five years) of initiating your initial comprehensive performance test. You must submit subsequent NOCs, containing test results, within 90 days after the completion of subsequent tests.

The rule allows you to initiate subsequent tests any time up to 30 days after the deadline for the subsequent performance test. Thus, you can modify the combustor or add new emission control equipment at any time and conduct new performance testing to document compliance with the emission standards. In addition, this testing window allows you to plan to commence testing well in advance of the deadline to address unforseen events that could delay testing.[181] This testing window applies to both comprehensive performance tests and confirmatory performance tests. For example, if the deadline for your second comprehensive performance test is January 10, 2008, you may commence the test at any time after completing the initial comprehensive performance test but not later than February 10, 2008. The deadline for subsequent comprehensive and confirmatory performance tests are based on the commencement date of the previous comprehensive performance test.

[181] We note that a case-by-case time extension for commencement of subsequent performance testing is also provided under § 63.1207(i).

2. What Are the Procedures for Review and Approval of Test Plans and Requirements for Notification of Testing?

In the April 1996 NPRM, we proposed in § 63.7(b)(1) to require submittal of a "notification of performance test" to the Administrator 60 days prior to the planned test date. This notification included the site-specific test plan itself for review and approval by the Administrator (§ 63.8(e)(3)). In the May 1997 NODA, to ensure coordination of destruction removal efficiency (DRE) and MACT performance testing, we considered requiring you to submit the test plan one year rather than 60 days prior to the scheduled test date to allow the regulatory official additional time to consider DRE testing in context with MACT comprehensive performance testing. This one-year test review period would only have applied to sources required to perform a DRE test.

In today's final rule, we maintain the requirement for you to submit the test plan one year prior to the scheduled test date, but apply that requirement to all sources, not just those performing a DRE test. After consideration of comments (described below), we determined that this one-year period is needed to provide regulatory officials sufficient time (i.e., nine months) to review and approve or notify you of intent to disapprove the plan. Nine months is needed for the review for all sources given the amount of technical information that would be included in the test plan, and would also allow time to assess whether a source is required to perform a DRE test (see Part IV, Section IV, for discussion of DRE testing requirements; see also § 63.1206(b)(8)). During this nine-month period, the regulatory officials will review your test plan and determine if it is adequate to demonstrate compliance with the emission standards and establish operating requirements.

After submittal of the test plan, review and approval or notification of intent to deny approval of the test plan will follow the requirements of § 63.7(c)(3). That section provides procedures for you to provide additional information before final action on the plan. It also requires you to comply with the testing schedule even if permit officials have not approved your test plan. The only exception to this requirement is if you proposed to use alternative test methods to those specified in the rule. In that case, you may not conduct the performance test until the test plan is approved, and you have 60 days after approval to conduct the test.

Several commenters suggest that it would be difficult for permit officials to review and approve test plans within the nine-month window given that many test plans may be submitted at about the same time. They cite experiences under RCRA trial burn plan approvals where permit officials have taken much longer than nine months to approve a plan, and have requested that the final rule allow for a longer review period. Commenters are concerned with the consequences of being required to conduct the performance test even though permit officials may not have had time to approve the test plan. They recite various concerns that permit officials may at a later date determine that the performance test was inadequate and require retesting. Commenters suggest that the rule establish the date for the initial comprehensive performance test as 60 days following approval of the test plan, whenever that may occur, thus extending the deadline for the performance test indefinitely from the current requirement of six months after the compliance date.

We maintain that the nine-month review period is appropriate for several reasons. First, we are unwilling to build into the regulations an indefinite period for review. This would have the potential to delay implementation of the MACT emission standards without any clear and compelling reason to do so.

Second, the RCRA experience with protracted approval schedules, sometimes over a decade ago, is not applicable or analogous to the MACT situation. Under the RCRA regulatory regime, particularly at the early stages, there were few incentives for either permit officials or owners or operators to expeditiously negotiate acceptable test plans. No statutory deadlines existed for a compliance date, and existing facilities operated under interim status (a type of grand fathering tantamount to a permit). This interim status scheme placed at least some controls on hazardous waste combustors during the permit application and trial burn test plan review periods. As a result, regulatory officials could take significant amounts of time to address what was then a new type of approval, that for trial burn testing to meet RCRA final permit standards.

Under MACT, the situation today is quite different. In light of the statutory compliance date of 3 years and the existing regulatory framework, sources know as of today's final rule that they need to respond promptly and effectively to permit officials' concerns about the test plan because the performance test must be conducted

within six months after the compliance date whether or not the test plan is approved. And they have at least two years to prepare and submit these plans, and to work with regulatory officials even before doing so. For their part, permit officials recognize that they have the responsibility to review and approve the plan or notify the source of their intent to deny approval within the nine-month window given that the source must proceed with expensive testing on a fixed deadline whether or not the plan is approved. To the extent regulatory officials anticipate that many test plans will be submitted at about the same time, the agencies have at least two years to figure out ways to accommodate this scenario from a resource and a prioritization standpoint. If permit officials nevertheless fail to act within the nine-month review and approval period, a source could argue that this failure is tacit approval of the plan and that later "second-guessing" is not allowable. This should be a very strong incentive for regulatory officials to act within the nine months, especially with a two-year lead time to avoid this type of situation

In addition, the RCRA experience is not a particularly good harbinger of the future MACT test plan approval, as commenters suggest, because most sources will have already completed trial burn testing under RCRA. Thus, both the regulatory agencies and the facilities have been through one round of test plan submittal, review, and approval for their combustion units. Given that MACT testing is very similar to RCRA testing, approved RCRA test protocols can likely be modified as necessary to accommodate any changes required under the MACT rule. Although some of these changes may be significant, we expect that many will not be. For example, RCRA trial burn testing always included DRE testing. Under the MACT rule, DRE testing will not be required for most sources. And for sources where DRE testing is required under MACT, most will have already been through a RCRA approval of the DRE test protocol, which should substantially simplify the process under MACT.

The third reason that we maintain the nine-month review and approval window is appropriate is that discussions with several states leads us to conclude that they are prepared to meet their obligations under this provision. This is a highly significant indicator that the nine-month review and approval period is a reasonable period of time, particularly since all permitting agencies have at least two years to plan for submittal of test plans from the existing facilities in their jurisdictions.

In summary, sound reasons exist to expect that today's final rule provides sufficient time for the submittal, review, and approval of test plans. Furthermore, clear incentives exist for both owners and operators and permit officials to work together expeditiously to ensure that an approval or notice of intent to disapprove the test plan can be provided within the nine-months allotted.

On a separate issue, we also retain, in today's final rule, the 60-day time frame and requirements of § 63.7(b)(1) for submittal of the notification of performance test. Additionally, the final rule continues to provide an opportunity for, but does not require, the regulatory agency to review and oversee testing.

3. What Is the Provision for Time Extensions for Subsequent Performance Tests?

The Administrator may grant up to a one year time extension for any performance test subsequent to the initial comprehensive performance test. This enables you to consolidate MACT performance testing and any other emission testing required for issuance or reissuance of Federal/State permits.[182]

At the time of proposal, we were concerned about how to allow coordination of MACT performance tests and RCRA trial burns. As discussed elsewhere, the RCRA trial burn is superseded by MACT performance testing. However, a one-year time extension may still be necessary for you to coordinate performance of a RCRA risk burn. In addition, commenters state that there may be additional reasons to grant extension requests (*e.g.* some TSCA-regulated hazardous waste combustors may be required to perform stack tests beyond those required by MACT). Furthermore, some sources may have to comply with state programs requiring RCRA trial burn testing. To address these situations, to promote coordinated testing, and to avoid unnecessary source costs, the final rule allows up to a one-year time extension for the performance test.

When performance tests and other emission tests are consolidated, the deadline dates for subsequent comprehensive performance tests are adjusted correspondingly. For example, if the deadline for your confirmatory performance test is January 1 and your state-required trial burn is scheduled for September 1 of the same year, you can apply to adjust the deadline for the confirmatory performance test to September 1. If granted, this also would delay by a corresponding time period the deadline dates for subsequent comprehensive performance tests.

The procedures for granting or denying a time extension for subsequent performance tests are the same as those found in § 63.6(i), which allow the Administrator to grant sources up to one additional year to comply with standards.[183] These are also the same procedures apply to a request for a time extension for the initial NOC.

4. What Are the Provisions for Waiving Operating Parameter Limits During Subsequent Performance Tests?

Operating parameter limits are automatically waived during subsequent comprehensive performance tests under an approved performance test plan. See § 63.1207(h). This waiver applies only for the duration of the comprehensive performance test and during pretesting for an aggregate period up to 720 hours of operation. You are still required to be in compliance with MACT emissions standards at all times during these tests, however.

In the April 1996 NPRM, we proposed to allow the burning of hazardous waste only under the operating limits established during the previous comprehensive performance test (to ensure compliance with emission standards not monitored with a continuous emissions monitoring system). Two types of waivers from this requirement would have been provided during subsequent comprehensive performance tests: (1) An automatic waiver to exceed current operating limits up to 5 percent; and (2) a waiver that the Administrator may grant if warranted to allow the source to exceed the current operating limits without restriction. We proposed an automatic waiver because, without the waiver, the operating limits would become more and more stringent with subsequent comprehensive performance tests. This is because sources would be required to operate within the more stringent conditions to ensure that they did not exceed a current operating limit. This would result in a shrinking operating envelope over time.

A number of commenters question the comprehensive performance test's 5%

[182] In addition, this provision also may assist you when unforseen events beyond your control (*e.g.*, power outage, natural disaster) prevent you from meeting the testing deadline.

[183] Note, however, that § 63.6(i) applies to an entirely different situation: extension of time for initial compliance with the standards, not subsequent performance testing.

limit over existing permit conditions. Some commenters state that the EPA should not limit a facility's operating envelope from test to test based on operating conditions established during the previous test. The operator should be free to set any conditions for the comprehensive performance test, short of what the regulator deems to pose a short-term environmental or health threat or inadequate to ensure compliance with an emission standard. Commenters also state that the requirement that the facility accept the more stringent of the existing 5% limit or the test result will inevitably result in the ratcheting down of limits over time. Since certain conditions have much greater variation than 5% over a limit, sufficient variability must be allowed so the operator can run a test under the conditions it wishes to use as the basis for worst case operation.

We agree that a waiver is necessary to avoid ratcheting down the operating limits in subsequent tests. Further, in view of the natural variability in hazardous waste combustor operations, a 5% waiver may be insufficient. Because you are required to comply with the emission standards, there does not appear to be any reason to establish national restrictions on operations during subsequent performance tests. Therefore, the final rule allows a waiver from previously established operating parameter limits, as long as you comply with MACT emission standards and are operating under an approved comprehensive performance test plan. Operating parameter limits will be reset based on the new tests. Furthermore, the permitting authority will review and has the opportunity to disapprove any proposed test conditions which may result in an exceedance of an emission standard.

B. What Is the Purpose of Comprehensive Performance Testing?

The purposes of the comprehensive performance test are to: (1) Demonstrate compliance with the continuous emissions monitoring systems-monitored emission standards for carbon monoxide and hydrocarbons; (2) conduct manual stack sampling to demonstrate compliance with the emission standards for pollutants that are not monitored with a continuous emissions monitoring system (e.g., dioxin/furan, particulate matter, DRE, mercury, semivolatile metal, low volatile metal, hydrochloric acid/chlorine gas); (3) establish limits on the operating parameters required by § 63.1209 (Monitoring Requirements) to ensure compliance is maintained with those emission standards for which a continuous emissions monitoring system is not used for compliance monitoring; and (4) demonstrate that performance of each continuous monitoring system is consistent with applicable requirements and the quality assurance plan. In general, the comprehensive performance test is similar in purpose to the RCRA trial burn and BIF interim status compliance test, but with relatively less Agency oversight and a higher degree of self-implementation, as discussed below.

The basic framework for comprehensive performance testing is set forth in the existing general requirements of subpart A, part 63. Therefore, for convenience of the reader, we will review key elements of those regulations and highlight any modifications made specifically for hazardous waste combustors.

1. What Is the Rationale for the Five Year Testing Frequency?

As discussed earlier, you must perform comprehensive performance testing every five years. We require periodic comprehensive performance testing because we are concerned that long-term stress to the critical components of a source (e.g., firing systems, emission control equipment) could adversely affect emissions.

In the April 1996 NPRM, we proposed that large sources (i.e., those with a stack gas flow rate greater than 23,127 acfm) and sources that accept off-site wastes would be required to perform comprehensive performance testing every three years. We also proposed that small, on-site sources perform comprehensive performance testing every five years unless the Administrator determined otherwise on a case-specific basis. Commenters suggest that the proposed three year testing frequency is too restrictive. They said that test plan approval time, bad weather, mechanical failure, and the testing itself combine to make the proposed test frequency too tight for tests of this magnitude.

We agree that, due to the magnitude of the comprehensive performance test, a more appropriate testing schedule is required. Therefore, we adopt a comprehensive performance testing frequency of every five years for small and large sources. In addition, this comprehensive performance testing schedule should correspond to the renewal of the title V permit. More frequent comprehensive performance testing is required, however, if there is a change in design, operation, or maintenance that may adversely affect compliance. See § 63.1206(b)(6).

2. What Operations Are Allowed During a Comprehensive Performance Test?

Because day-to-day limits are established for operating parameters during the comprehensive performance test, we allow operation during the performance test as necessary provided the unit complies with the emission standards. Accordingly, you can spike feedstreams with metals or chlorine, for example, to ensure that the feedrate limits are sufficient to accommodate normal operations while allowing some flexibility to feed higher rates. See Part Four, Section I. B. above for further discussion of normal operations. We note that this differs from § 63.7(e) which requires performance testing under "normal" operating conditions. See § 63.1207(g).

Most commenters agree that the comprehensive performance test should be conducted under extreme conditions at the edge of the operating envelope. Commenters point out that they needed to operate in this mode to establish operating parameter limits to cover all possible normal operating emissions values. Commenters also state that feedstreams may need to be spiked with metals or chlorine to ensure limits high enough to allow operational flexibility. We agree that these modes of operation are needed to establish operating parameter limits that cover all possible normal operating emissions values.[184] There is precedent for this approach in current rules regulating hazardous waste combustors (e.g., the RCRA incinerator and BIF rules).

In addition, two or more modes of operation may be identified, for which separate performance tests must be conducted and separate limits on operating conditions must be established. If you identify two modes of operation for your source, you must note in the operating record which mode you are operating under at all times. For example, two modes of operation must be identified for a cement kiln that routes kiln off-gas through the raw meal mill to help dry the raw meal. When the raw meal mill is not operating (perhaps 15% of the time), the kiln gas bypasses the raw meal mill. Emissions of particulate matter and other hazardous air

[184] Allowing sources to operate during MACT comprehensive performance testing under the worst-case conditions, as allowed during RCRA compliance testing, rather than under normal conditions as provided by § 63.7(e) for other MACT sources, ensures that the emissions standards do not restrict hazardous waste combustors using MACT control to operations resulting in emissions that are lower than normal. Therefore, allowing performance testing on a worst-case basis provides that the MACT emission standards are achievable in practice by sources using MACT control.

pollutants or surrogates may vary substantially depending on whether the kiln gas bypasses the raw meal mill.

As discussed below for confirmatory testing, when conducting the comprehensive performance test, you also must operate under representative conditions for specified parameters that may affect dioxin/furan emissions. These conditions must ensure that emissions are representative of normal operating conditions. Also, when demonstrating compliance with the particulate matter, semivolatile metal, and low volatile metal emission standards, when using manual stack sampling, and when demonstrating compliance with the dioxin/furan and mercury emission standards using carbon injection or carbon bed, you must operate under representative conditions for the cleaning cycle of the particulate matter control device. This is because particulate matter emissions increase momentarily during cleaning cycles and can affect emissions of these pollutants.

3. What Is the Consequence of Failing a Comprehensive Performance Test?

If you determine that you failed any emission standard during the performance test based on: (1) Continuous emissions monitoring systems recordings; (2) results of analysis of samples taken during manual stack sampling; or (3) results of the continuous emissions monitoring systems performance evaluation, you must immediately stop burning hazardous waste. However, if you conduct the comprehensive performance test under two or more modes of operation, and you meet the emission standards when operating under one or more modes of operation, you are allowed to continue burning under the mode of operation for which the standards were met.

If you fail one or more emission standards during all modes of operation tested, you may burn hazardous waste only for a total of 720 hours and only for the purposes of pretesting (i.e., informal testing to determine if the combustor can meet the standards operating under modified conditions) or comprehensive performance testing under modified conditions. The same standards apply for the retest as applied for the original test. These conditions apply when you fail the initial or subsequent comprehensive performance test.

A number of commenters suggest that the 720 operating hours allowed after a failed performance test should be renewable, as they are under existing incinerator and BIF rules. We are persuaded by the commenters' rationale and will adopt this practice in today's rule. The final rule allows the 720 hours of operation following a failed performance test to be renewed as often as the Administrator deems reasonable. We note that hazardous waste combustors are currently subject to virtually these same requirements under RCRA rules.

If you fail a comprehensive performance test, you must still submit a NOC as required indicating the failure. We want to ensure that the regulatory authorities are fully aware of a failure and the need for the facility to initiate retesting.

We do not specifically address other consequences of failing the comprehensive performance test in the regulatory language. We will instead rely on the regulating agency's enforcement policy to govern the type of enforcement response at a facility that exceeds an emission standard, fails to ensure compliance with the standards, or fails to meet a compliance deadline.

C. What Is the Rationale for Confirmatory Performance Testing?

Confirmatory performance testing for dioxin/furan is required midway between the cycle required for comprehensive performance testing to ensure continued compliance with the emission standard. We require such testing only for dioxin/furan given: (1) The health risks potentially posed by dioxin/furan emissions; (2) the lack of a continuous emissions monitoring system for dioxin/furan; (3) the lack of a material that directly and unambiguously relates to dioxin/furan emissions which could be monitored continuously by means of feedrate control (as opposed to, for example, metals feedrates, which directly relate to metals emissions); and (4) wear and tear on the equipment, including any emission control equipment, which over time could result in an increase in dioxin/furan emissions even though the source stays in compliance with applicable operating limits.

Although emissions of dioxins/furans appear to be primarily a function of whether particulate matter is retained in post-combustion regions of the combustor (e.g., in an electrostatic precipitator or fabric filter, or on boiler tubes) in the temperature range that enhances dioxin/furan formation, the factors that affect dioxin/furan formation are imperfectly understood. Certain materials seem to inhibit formation while others seem to enhance formation. Some materials seem to be precursors (e.g., PCBs). Changes in the residence time of particulate matter in a control device may affect the degree of chlorination of dioxins/furans, and thus the toxicity equivalents of the dioxins/furans. Given these uncertainties, the health risks posed by dioxins/furans, and the relatively low cost of dioxin/furan testing, it appears prudent to require confirmatory testing to determine if changes in feedstocks or operations that are not limited by the MACT rule may have increased dioxin/furan emissions to levels exceeding the standard. We also note that confirmatory dioxin/furan testing is required for municipal waste combustors (60 FR at 65402 (December 19, 1995)).

Confirmatory testing differs from comprehensive testing, however, in that you are required to operate under normal, representative conditions during confirmatory testing. This will reduce the cost of the test, while providing the essential information, because you will not have to establish new operating limits based on the confirmatory test.

1. Do the Comprehensive Testing Requirements Apply to Confirmatory Testing?

The following comprehensive performance testing requirements discussed above also apply to confirmatory testing: Agency oversight, notification of performance test, notification of compliance, time extensions, and failure to submit a timely notice of compliance. However, we modify some of the comprehensive test requirement for confirmatory tests, as discussed below.

2. What Is the Testing Frequency for Confirmatory Testing?

You are required to conduct confirmatory performance testing 30 months (i.e., 2.5 years) after the previous comprehensive performance test. The same two-month testing window, applicable for comprehensive tests, also applies to confirmatory tests.

Several commenters state that the proposed schedule for confirmatory tests is too frequent. The April 1996 NPRM would have required large and off-site sources to conduct confirmatory performance testing 18 months after the previous comprehensive performance test. Small, on-site sources would have been required to conduct the testing 30 months after the previous comprehensive performance test. One commenter suggests that the frequency should be at multiples of 12 months to avoid seasonal weather problems in many locations. Other commenters state that EPA's justification for confirmatory tests is not supported by evidence

showing increased emissions due to equipment aging and that the performance of combustion practice parameters is already assured through continuous monitoring systems.

We agree that due to the magnitude and expense of the test, a more appropriate testing schedule would be every 2.5 years, mid-way between the comprehensive performance test cycle. In addition, we agree that testing in certain locations at certain times of the year (e.g., northern states in the winter) can be undesirable. Although possible, it would add to the difficulty and expense of the testing. As previously discussed, sources can request a time extension to allow for a more appropriate testing season. However, the regulatory date for confirmatory testing remains midcycle to the comprehensive performance testing.

3. What Operations Are Allowed During Confirmatory Performance Testing?

As proposed, you are required to operate under normal conditions during confirmatory performance testing. Normal operating conditions are defined as operations during which: (1) The continuous emissions monitoring systems that measure parameters that could relate to dioxin/furan emissions—carbon monoxide or hydrocarbons—are recording emission levels within the range of the average value for each continuous emissions monitoring system (the sum of all one-minute averages, divided by the number of one minute averages) over the previous 12 months to the maximum allowed; (2) each operating parameter limit established to maintain compliance with the dioxin/furan emission standard (see discussion in Part Five, Section VI.D.1 below and § 63.1209(k)) is held within the range of the average values over the previous 12 months and the maximum or minimums, as appropriate, that are allowed; (3) chlorine feedrates are set at normal or greater; and (4) when using carbon injection or carbon bed, the test is conducted under representative conditions for the cleaning cycle of the particulate matter control device. See § 63.1207(g)(2).

We define normal operating conditions in this manner because, otherwise, sources could elect to limit levels of the regulated dioxin/furan operating parameters (e.g., hazardous waste feedrate, combustion chamber temperature, temperature at the inlet to the dry particulate matter control device) to ensure minimum emissions. Thus, without specifying what constitutes normal conditions, the confirmatory test could be meaningless. On the other hand, the definition of normal conditions is broad enough to allow adequate flexibility in operations during the test. The confirmatory test confirms that your under day-to-day operations are meeting the dioxin/furan standard. Thus, the confirmatory test differs from the comprehensive performance test in which you may choose to extend to the edge of the operating envelope to establish operating parameters.

The April 1996 NPRM would have required normal operating conditions for particulate matter continuous emissions monitoring systems. For the final rule, particulate matter levels are limited during confirmatory testing to ensure normal operations only when your source is equipped with carbon injection or carbon bed for dioxin/furan emissions control (see dioxin/furan operating limits discussion below).

The April 1996 NPRM also would have required you to operate under representative conditions for types of organic compounds in the waste (e.g., aromatics, aliphatics, nitrogen content, halogen/carbon ratio, oxygen/carbon ratio) and volatility of wastes when demonstrating compliance with the dioxin/furan emission standard. Several commenters object to this requirement. We agree that restrictions on these organic compounds in the waste are redundant and not necessary to assure good combustion. In addition, the requirement would be impracticable because in most cases measured data would not be available on these parameters. Therefore, the final rule does not require "representative" wastes with regard to these organic compounds for confirmatory testing.

It is prudent to require that chlorine be fed at normal levels or greater during the dioxin/furan confirmatory performance test. Although most studies show poor statistical correlation between dioxin/furan emissions and chlorine feedrate, some practical considerations are important. Chlorinated dioxin/furan obviously contain chlorine and some level of chlorine is necessary for its formation. During the confirmatory testing for dioxin/furan, we want you to operate your combustor under normal conditions relative to factors that can affect emissions of dioxin/furan. Therefore, you must feed chlorine at normal or greater levels given the potential for chlorine feedrates to affect dioxin/furan emissions. For the confirmatory performance test, normal is defined as the average chlorine fed over the previous 12 months. If you have established a maximum chlorine value for metals or total chlorine compliance in your previous comprehensive performance test, then that value can be used in the confirmatory test.

Several commenters suggest that when defining normal operation, a provision should be made to exclude inappropriate data, such as those occurring during instrument malfunction, at unit down time, or during instrument zero/calibration adjustment. The April 1996 NPRM did not allow for any data to be excluded. To define "normal" operation, we agree it is reasonable to exclude inappropriate data. For the final rule, calibration data, malfunction data, and data obtained when not burning hazardous waste do not fall into the definition of "normal" operation.

4. What Are the Consequences of Failing a Confirmatory Performance Test?

If you determine that you failed the dioxin/furan emission standard based on results of analysis of samples taken during manual stack sampling, you must immediately stop burning hazardous waste. You must then modify the design or operation of the unit, conduct a new comprehensive performance test to demonstrate compliance with the dioxin/furan emission standard (and other standards if the changes could adversely affect compliance with those standards), and establish new operating parameter limits. Further, prior to submitting a NOC based on the new comprehensive performance test, you can burn hazardous waste only for a total of 720 hours (renewable based on the discretion of the Administrator) and only for purposes of pretesting or comprehensive performance testing. These conditions apply when you fail the initial or any periodic confirmatory performance test.

However, if you conduct the comprehensive performance test under two or more modes of operation, and meet the dioxin/furan emission standards during confirmatory testing when operating under one or more modes of operation, you may continue burning under the modes of operation for which you meet the standards.

Other than stopping burning of hazardous waste, we do not specifically address the consequences of failing the confirmatory performance test in the regulatory language but will instead rely on the regulating agency's enforcement policy to govern the type of enforcement response at a facility that exceeds an emission standard, fails to ensure compliance with the standards, or fails to meet a compliance deadline. This approach is consistent with the way

other MACT standards are implemented.

Some commenters suggest that the requirement to stop burning waste after a failed confirmatory test is overly harsh. They suggest that temporarily restricted burning should be allowed, conservative enough to insure compliance, while a permanent solution is developed. We continue to believe that a source should stop burning hazardous waste until it reestablishes operating parameter limits that ensure compliance with the dioxin/furan emission standard. We note that hazardous waste combustors are currently subject to virtually these same requirements under RCRA rules.

D. What Is the Relationship Between the Risk Burn and Comprehensive Performance Test?

1. Is Coordinated Testing Allowed?

Traditionally, a RCRA trial burn serves three primary functions: (1) Demonstration of compliance with performance standards such as destruction and removal efficiency; (2) determination of operating conditions that assure the hazardous waste combustor can meet applicable performance standards; and (3) collection of emissions data for incorporation into a SSRA that, subsequently, is used to establish risk-based permit conditions where necessary.[185] Today's rulemaking transfers the first two functions of a RCRA trial burn from the RCRA program to the CAA program. The responsibility for collecting emissions data needed to perform a SSRA is not transferred because SSRAs are exclusively a RCRA matter.

Generally speaking, the type of emissions data needed to conduct a SSRA includes concentration and gas flow rate data for dioxin/furans, nondioxin/furan organics, metals, hydrogen chloride, and chlorine gas. Additionally, particle-size distribution data are normally needed for the air modeling component of the SSRA. We have recently published guidance on risk burns and the data to be collected. See USEPA, "Human Health Risk Assessment Protocol for Hazardous Waste Combustion Facilities" External Peer Review Draft, EPA-530-D-98-001A, B & C and USEPA, "Guidance on Collection of Emissions Data to Support Site-Specific Risk Assessments at Hazardous Waste Combustion Facilities," EPA 530-D-98-002, August 1998.

A large number of hazardous waste combustors subject to today's rule will have completed a RCRA trial burn and SSRA emissions testing prior to the date of the MACT comprehensive performance test. There may exist, however, some facilities for which this is not the case. For these facilities, the Agency proposed, in both the April 1996 NPRM and the May 1997 NODA, an option of coordinating SSRA emissions data collection with MACT performance testing. Facilities choosing to perform coordinated testing would be expected to factor SSRA data collection requirements into the MACT performance test plan. Commenters support this approach, emphasizing that coordinated testing would conserve the resources of both the regulatory authority and regulated source. The Agency agrees with the commenters and continues to support coordinated testing. There is no need, however, for today's final rule to include regulatory language for coordinated testing since it is simply matter of submitting and implementing a test plan which accomplishes the objectives of both a risk burn and MACT performance test.

Coordinated testing may not be possible for all hazardous waste combustors subject to today's MACT standards. Some sources may not be able to test under one set of conditions that addresses all data needs for both MACT implementation and SSRAs. SSRA emissions testing traditionally is performed under worst-case conditions, but may be obtained under normal testing conditions when necessary.[186] As noted in the April 1996 NPRM, as well as in this preamble, we generally anticipate sources will conduct MACT performance testing under conditions that are at the edge of the operating envelope or the worst-case to ensure operating flexibility. Regardless of which test conditions are used to collect SSRA emissions data, under the coordinated testing scenario, those conditions should be consistent with the MACT performance test to the extent possible.

Similarly, a source may experience difficulty integrating MACT performance testing with SSRA emissions testing due to conflicting goals in establishing enforceable operating parameters, i.e., a parameter cannot be maximized for purposes of the SSRA data collection while at the same time be properly maximized or minimized for purposes of performance testing. It is additionally important to ensure that the feed material used during the performance testing is appropriate for SSRA emissions testing. When collecting emissions data for a SSRA, testing with actual worst-case waste is preferred to ensure that the testing material is representative of the toxic, persistence and bioaccumulative characteristics of the waste that ultimately will be burned. However, even if multiple tests need to be performed to accomplish all of the objectives, it is still advantageous to conduct these tests in the same general time frame to minimize mobilization and sampling costs.

The timing of the required tests may cause difficulty for some sources wishing to use coordinated testing. As we discussed in the May 1997 NODA, if the timing of the SSRA data collection does not coincide with the MACT performance test requirement, the performance test should not be unduly delayed. Commenters agree with this approach.

2. What Is Required for Risk Burn Testing?

We expect that sources for which coordinated testing is not possible will need to obtain SSRA emissions data through a separate risk burn. Similar to a traditional RCRA trial burn, risk burn testing should be conducted pursuant to a test plan that is reviewed and approved by the RCRA permitting authority. 40 CFR 270.10(k) provides that the permitting authority may require the submittal of information to establish permit conditions to ensure a facility's operations will be protective of human health and the environment. This regulatory requirement provides for the collection of emissions data, as appropriate, for incorporation into a SSRA as well as for the performance of the SSRA itself. We clarify in amendments to §§ 270.19, 270.22, 270.62 and 270.66 that the Director may apply provisions from those sections, on a case-by-case basis, to establish a regulatory framework for conducting the risk burn under § 270.10(k) and imposing risk-based conditions under § 270.32(b)(2) (omnibus provisions). This clarifying language is intended to prevent any confusion from other language added to §§ 270.19, 270.22, 270.62 and 270.66 today stating that

[185] Under 40 CFR 270.10(k), which is the RCRA Part B information requirement that supports implementation of the RCRA omnibus permitting authority, a regulatory authority may require a RCRA permittee or an applicant to submit information to establish permit conditions as necessary to protect human health and the environment. Under this authority, risk burns and SSRAs may be required.

[186] Criteria for determining the circumstances under which SSRA emissions data should be collected using normal versus worst-case testing conditions are provided in EPA's Guidance on Collection of Emissions Data to Support Site-Specific Risk Assessments at Hazardous Waste Combustion Facilities (EPA 530-D-98-002, August 1998).

these provisions otherwise no longer apply once a source has demonstrated compliance with the MACT standards and limitations of 40 CFR part 63, subpart EEE. (See Part Five, Section XI.B.3 for further discussion.) Facilities and regulatory authorities may consult existing EPA guidance documents for information regarding the elements of risk burn testing.[187]

E. What Is a Change in Design, Operation, and Maintenance? (See § 63.1206(b)(6).)

The April 1996 NPRM noted that sources may change their design, operation, or maintenance practices in a manner that may adversely affect their ability to comply with the emission standards. These sources would be required to conduct a new comprehensive performance test to demonstrate compliance with the affected emission standards and would be required to re-establish operating limits on the affected parameters specified in § 63.1209. (See 61 at FR 17518.) The proposal stated that until a complete and accurate revised NOC is submitted to the Administrator, sources would be permitted to burn hazardous waste following such changes for time a period not to exceed 720 hours and only for the purposes of pretesting or comprehensive performance testing. The approach in the April 1996 NPRM remains appropriate, and we are adopting it in today's final rule with minor modifications.

For changes made after submittal of your NOC that may adversely affect compliance with any emission standard, as defined later in this section, today's rule requires you to notify the Administrator at least 60 days prior to the change unless you document circumstances that dictate that such prior notice is not reasonably feasible. The notification must include a description of the changes and which emission standards may be affected. The notification must also include a comprehensive performance test schedule and test plan that will document compliance with the affected emission standard(s). You must conduct a comprehensive performance test to document compliance with the affected emission standard(s) and establish operating parameter limits as required and submit a revised NOC to the Administrator. You also must not burn hazardous waste for more than a total of 720 hours after the change and prior to submitting your NOC, and you must burn hazardous waste during this time period only for the purposes of pretesting or comprehensive performance testing.

Some commenters are uncomfortable with the proposed regulatory language, stating that it was too generic and that the Agency could require a comprehensive performance test even after minor changes in maintenance practices. One commenter suggests that EPA incorporate a list of changes significant enough to affect compliance, similar to what is currently done in the RCRA permit modification classification scheme in Appendix I of § 270.42.

We intentionally proposed an approach that provides some degree of flexibility to permit authorities. Individual facilities will need to consult with these permit authorities who will make the decision on the site-specific facts. We do not intend to require a comprehensive performance test after minor modifications to system design, or after implementing minor changes to operating or maintenance practices. We considered incorporating sections of Appendix I of § 270.42 to further clarify when comprehensive performance tests would be required.[188] However, it is impossible to envision all scenarios in which changes in design, operation, or maintenance practices may or may not trigger the requirement of a complete, or even partial, comprehensive performance test. Discussion of specific scenarios is more suitable in an Agency guidance document as opposed to regulatory provisions, and implemented on a site-specific basis. Thus, the April 1996 NPRM set out the regulatory approach as well as can be done, and we are adopting it today with minor modifications.

In the April 1996 NPRM, we did not address what must be done when you change design, operation, or maintenance practices during the time period between the compliance date and when you submit your NOC. If you make a change during this time period, today's rule requires you to revise your DOC, which is maintained on-site, to incorporate any revised limits necessary to comply with the standards. For purposes of this provision, today's rule defines "change" as any change in reported design, operation, or maintenance practices you previously documented to the Administrator in your comprehensive performance test plan, NOC, DOC, or startup, shutdown, and malfunction plan.

Commenters point out that the proposal did not discuss recordkeeping requirements necessary for the Administrator to determine if you are adequately concluding that changes in design, operation, or maintenance practices do not trigger a comprehensive performance test requirement[189]. As a result, today's rule requires you to document in your operating record whenever you make a change (as defined above) in design, operation, or maintenance practices, regardless of whether the change may adversely affect your ability to comply with the emission standards. See § 63.1206(b)(6)(ii). You are also required to maintain on site an updated comprehensive performance test plan, NOC, and startup, shutdown, and malfunction plan that reflect these changes. See § 63.1211(c).

F. What Are the Data In Lieu Allowances?

You are allowed to submit data from previous emissions tests in lieu of performing a MACT performance test to set operating limits. See § 63.1207(c)(2). To use previous emissions test data, the data must have been collected less than 5 years before the date you intend to submit your notification of compliance. The data must also have been collected as part of a test that was for the purpose of demonstrating compliance with RCRA or CAA requirements. Additionally, you must submit your request to use previous test data in your comprehensive performance test plan which is submitted 1 year in advance of the MACT performance test. Finally, you must schedule your subsequent MACT performance test and MACT confirmatory test 5 years and 2.5 years respectively following the date the emissions test data your submitting was collected.

We developed this allowance in response to comments that suggested we should allow previous RCRA testing to be used in lieu of performing a new MACT performance test if the data could be used to demonstrate compliance and establish operating limits to ensure compliance with the MACT emissions standards. Commenters reasoned, and we agreed, that such an allowance was reasonable and necessary for those sources that

[187] USEPA, "Human Health Risk Assessment Protocol for Hazardous Waste Combustion Facilities" External Peer Review Draft, EPA-530-D-98-001A,B&C, Date.; USEPA, "Guidance on Collection of Emissions Data to Support Site-Specific Risk Assessments at Hazardous Waste Combustion Facilities" EPA 530-D-98-002, August 1998.

[188] One approach would be to require performance tests for modifications covered by the class 2 and class 3 permit modifications associated with combustion source design and operating parameter changes.

[189] We cannot determine if a source has accurately concluded that a change does not adversely affect its ability to comply with the emission standards if we are never aware that changes were made to the source.

must perform emissions tests to satisfy other state or federal requirements. As we developed this allowance, we decided that it is necessary to limit the age of the data and specify the date of the following performance test because we need to be consistent with the MACT performance test requirements with respect to testing frequency. We can further justify the time and testing limitations of the data in lieu of allowance by acknowledging that we don't want some sources gaining an advantage over others by extending the date between performance tests. However, we also weighed the fact that some sources may be required to perform RCRA testing fairly close to the compliance date or promulgation date of today's rule and we didn't want to penalize them by forcing them to perform a new performance test before five years had elapsed since their previous test. So we settled on an approach that allows the use of previous emissions test data and effectively sets the same testing frequency as is applied to test data collected via a MACT performance test following the compliance date. This approach doesn't penalize or favor any source over another and it allows each source to take advantage of this provision when it makes sense. For instance, a source may be granted approval to use data from a RCRA trial burn performed 1 year before today's date, thus not requiring the source to perform a comprehensive performance test 270 days following the compliance date. Instead, the source must schedule its next MACT performance test five years after the date the test was performed. However, the source must perform a confirmatory test 270 days following the compliance date because the test schedule for the confirmatory test is also linked to the date of the performance test. So in this situation the source must determine if its better to run the comprehensive performance test on a normal schedule after the compliance date or delay the comprehensive test and perform a confirmatory test instead.

VI. What Is the Notification of Compliance?

A. What Are the Requirements for the Notification of Compliance?

You must submit to the Administrator the results of the comprehensive performance test in a notification of compliance (NOC) no later than three months after the conclusion of the performance test. You must submit the initial NOC later than nine months following the compliance date.

B. What Is Required in the NOC?

You must include the following information in the NOC:

—Results of the comprehensive performance test, continuous monitoring system performance evaluation, and any other monitoring procedures or methods that you conducted;
—Test methods used to determine the emission concentrations and feedstream concentrations, as well as a description of any other monitoring procedures or methods that you conducted;
—Limits for the operating parameters;
—Procedures used to identify the operating parameter limits specified in § 63.1209;
—Other information documenting compliance with the operating requirements, including but not limited to automatic waste feed cutoff system operability and operator training;
—A description of the air pollution control equipment and the associated hazardous air pollutant that each device is designed to control; and
—A statement from you or your company's responsible official that the facility is in compliance with the standards and requirements of this rule.

C. What Are the Consequences of Not Submitting a NOC?

The normal CAA enforcement procedures apply if you fail to submit a timely notification of compliance. We do not adopt our proposed approach that would have required you to immediately stop burning hazardous waste if you failed to submit a timely NOC.

We proposed regulatory language stating that failure to submit a notification of compliance by the required date would result in the source being required to immediately stop burning hazardous waste. This proposal was similar to requirements applied to BIFs certifying compliance under RCRA. Under the proposal, if you wanted to burn hazardous waste in the future, you would be required to comply with the standards and permit requirements for new MACT and RCRA sources.

In the 1997 NODA, however, we proposed to rely on the regulating agency's policy regarding enforcement response to govern the type of enforcement response at a facility that fails to submit a notification of compliance. Based on NODA comments and review of this enforcement process, we are not including in the final rule regulatory language addressing the consequences of failure to submit a timely or complete NOC. Instead, we rely on the regulating agency's policy regarding enforcement response to govern the type of enforcement response at a facility that fails to meet a compliance deadline. This approach is more practical to implementing today's MACT standards and is more consistent with the way other MACT standards are implemented.

D. What Are the Consequences of an Incomplete Notification of Compliance?

In response to our April 1996 NPRM, commenters state that we were unclear as to the consequences of an incomplete NOC. Furthermore, commenters state that it was important that we specify what is needed and the consequences if an NOC is incomplete or more information is needed. Additionally, commenters recommend that if the NOC contains emission information, the certification statement, and a signature, we should judge the NOC to be administratively complete and an acceptable submission. In addition, commenters suggest that if the regulatory official reviewing the NOC determines that additional information is required, the source should be given ample time to submit that information.

Our enforcement approach to incomplete submissions, under RCRA or the CAA, is generally determined on a site-specific basis. We will not attempt to foresee and develop enforcement responses to all the possible levels of incompleteness for the NOC. This is beyond the scope of our national rulemaking. Furthermore, defining what constitutes an incomplete submission requires us to specifically prescribe a complete submission, which is not possible for all situations or all source designs. Some sources may require more detail than others in defining the parameters necessary to determine compliance on a continuous basis. Therefore, we instead define the minimum information necessary in the submission and allow the implementing agency to determine if more information is necessary in a facility's site-specific NOC.

In response to comments advocating that facilities be given ample time to submit additional information required by the regulatory official, we prefer to allow the implementing agency to determine the time periods that will be granted to submit additional information because some information requests may require widely varying degrees of time and effort to develop. Many potential problems associated with incomplete submissions can be prevented through interaction between

the source and the regulatory agency during the test plan review and approval process. We do not want our rules to act as disincentive to those discussions by providing a complete shield, regardless of the severity of the omission.

E. Is There a Finding of Compliance?

We adopt the requirement we proposed for the regulatory agencies to make a finding of compliance based on performance test results (see § 63.1206(b)(3)). This provision specifies that the regulatory agency must determine whether an affected source is in compliance with the emissions standards and other requirements of subpart EEE, as provided by the general provisions governing findings of compliance in § 63.6(f)(3). Thus, the regulatory agency is obligated to make this finding upon obtaining all the compliance information required by the standards, including the written reports of performance test results, monitoring results, and other applicable information. This includes, but may not be limited to, the information submitted by the source in its NOC.

VII. What Are the Monitoring Requirements?

In this section, we discuss the following topics: (1) The compliance monitoring hierarchy that places a preference on compliance with a CEMS; (2) how limits on operating parameters are established from comprehensive performance test data; (3) status and use of CEMS other than carbon monoxide, hydrocarbon, and oxygen CEMS; and (4) final compliance monitoring requirements for each emission standard.

A. What Is the Compliance Monitoring Hierarchy?

We proposed the following three-tiered compliance monitoring hierarchy in descending order of preference to ensure compliance with the emission standards: (1) Use of a continuous emission monitoring system (CEMS) for a hazardous air pollutant; (2) absent a CEMS for that hazardous air pollutant, use of a CEMS for a surrogate of that hazardous air pollutant and, when necessary, setting limits on operating parameters to account for the limitations of using surrogates; and (3) lacking a CEMS for either, requiring periodic emissions testing and site-specific limits on operating parameters. Accordingly, we proposed to require the use of carbon monoxide, hydrocarbon, oxygen, particulate matter, and total mercury CEMS. We also proposed performance specifications for multimetal, hydrochloric acid, and chlorine gas CEMS to give sources the option of using a CEMS for compliance with the semivolatile and low volatile metal emissions standards, and the hydrochloric acid/chlorine gas emission standard.

Commenters question the availability and reliability of CEMS other than those for carbon monoxide, hydrocarbon, and oxygen. We concur with some of the commenters' concerns and are not requiring use of a total mercury CEMS in the final rule or specifying the installation deadline and performance specifications for particulate matter CEMS. In addition, we have not promulgated performance specifications for these CEMS or multimetal, hydrochloric acid, and chlorine gas CEMS. We nonetheless continue to encourage sources to evaluate the feasibility of using these CEMS to determine the performance specifications, correlation acceptance criteria, and detector availability that can be achieved. Sources may request approval from permitting officials under § 63.8(f) to use CEMS to document compliance with the emission standards in lieu of periodic performance testing and compliance with limits on operating parameters. See discussion in Section VII.C below on these issues.

B. How Are Comprehensive Performance Test Data Used To Establish Operating Limits?

In this section, we discuss: (1) The definitions of terms related to monitoring and averaging periods; (2) the rationale for the averaging periods for operating parameter limits, (3) how comprehensive performance test data are averaged to calculate operating parameter limits; (4) how the various types of operating parameters are monitored/established; (5) how nondetect performance test feedstream data are handled; and (6) how rolling averages are calculated initially, upon intermittent operations, and when the hazardous waste feed is cut off.

1. What Are the Definitions of Terms Related to Monitoring and Averaging Periods?

In the April 1996 NPRM, we proposed definitions for several terms that relate to monitoring and averaging periods. For the reasons discussed below, we conclude that the proposed definitions are appropriate and are adopting them in today's rule. We also finalize definitions for "average run average" and "average highest or lowest rolling average" which were not proposed. We conclude these new definitions are necessary to clarify the meaning and intent of regulatory provisions associated with the monitoring requirements that are discussed in Part 5, Section VII.D. of this preamble.

We promulgate the following definitions in today's rule (see § 63.1201).

"Average highest or lowest rolling average" means the average of each run's highest or lowest rolling average run within the test condition for the applicable averaging period.

"Average run average" means the average of each run's average of all associated one minute values.

"Continuous monitor" means a device that: (1) Continuously samples a regulated parameter without interruption; (2) evaluates the detector response at least once every 15 seconds; and (3) computes and records the average value at least every 60 seconds, except during allowable periods of calibration and as defined otherwise by the CEMS Performance Specifications in appendix B of part 60.

"Feedrate operating limits" means limits on the feedrate of materials (e.g., metals, chlorine) to the combustor that are established based on comprehensive performance testing. The limits are established and monitored by knowing the concentration of the limited material (e.g., chlorine) in each feedstream and the flow rate of each feedstream.

"Feedstream" means any material fed into a hazardous waste combustor, including, but not limited to, any pumpable or nonpumpable solid, liquid, or gas.

"Flowrate" means the rate at which a feedstream is fed into a hazardous waste combustor.

"Instantaneous monitoring" means continuously sampling, detecting, and recording the regulated parameter without use of an averaging period.

"One-minute average" means the average of detector responses calculated at least every 60 seconds from responses obtained at least each 15 seconds.

"Rolling average" means the average of all one-minute averages over the averaging period.

One commenter opposes the requirement to take instrument readings every 15 seconds. This commenter contends that such an approach is simply impractical, unnecessary, and imposes a harsh burden upon members of the regulated community. Another commenter maintains that the CEMS Data Acquisition System should be capable of sampling the analyzer outputs at least every 15 seconds. With today's processing power and speed, the commenter states that this can easily be achieved. We agree with the second commenter and are requiring instrument

readings at least every 15 seconds because this is currently required in the Boilers and Industrial Furnace rulemaking. (See § 266.102(e)(6))

Another commenter states that the Agency's definition of "instantaneous monitoring" of combustion chamber pressure to control combustion system leaks is not clear.[190] The commenter states that, although an instantaneous limit cannot be exceeded at any time, continuous monitoring systems are required to detect parameter values only once every 15 seconds. We note that the final rule requires instantaneous monitoring only for the combustion chamber pressure limit to control combustion system leaks. The rule requires an automatic waste feed cutoff if the combustion chamber pressure at any time (i.e., instantaneously) exceeds ambient pressure (see § 63.1209(p)). The definition of a continuous monitoring system is that it must record instrument readings at least every 15 seconds. For instantaneous monitoring of pressure, the detector must clearly record a response more frequently than every 15 seconds.[191] It must detect and record pressure constantly without interruption and without any averaging period.

2. What Is the Rationale for the Averaging Periods for the Operating Parameter Limits?

The final rule establishes the following averaging periods: (1) No averaging period (i.e., instantaneous monitoring) for maximum combustion chamber pressure to control combustion system leaks; (2) 12-hour rolling averages for maximum feedrate of mercury, semivolatile metals, low volatile metals, chlorine, and ash (for incinerators); and, (3) one-hour averaging periods for all other operating parameters. As discussed later in this section, we conclude that the proposed ten-minute averaging periods are not necessary, on a national basis, to better ensure compliance with the emission standards at hazardous waste combustors, and have not adopted these averaging periods in this rulemaking.

a. When Is an Instantaneous Limit Used? An instantaneous limit is required only for maximum combustion chamber pressure to control combustion system leaks. This is because any perturbation above the limit may result in uncontrolled emissions exceeding the standards.

b. When Is an Hourly Rolling Average Limit Used? An hourly rolling average limit is required for all parameters that are based on operating data from the comprehensive performance test, except combustion chamber pressure and feedrate limits. Hourly rolling averages are required for these parameters rather than averaging periods based on the duration of the performance test because we are concerned that there may be a nonlinear relationship between operating parameter levels and emission levels of hazardous air pollutants.

c. Why Has the Agency Decided Not to Adopt Ten-Minute Averaging Periods? Dual ten-minute and hourly rolling averages were proposed for most parameters for which limits are based on the comprehensive performance test. See 61 FR at 17417. We proposed ten-minute rolling averages in addition to hourly rolling averages for these parameters because short term excursions of the parameter can result in a disproportionately large excursion of the hazardous air pollutant being controlled.

Commenters claim that the Agency's concerns with emission excursions due to short term perturbations of these operating parameters were not supported with data and are therefore unjustified, and claim that averaging periods shorter than those required in the existing BIF regulations would provide no environmental benefit.

We acknowledge that the Agency does not have extensive short-term emission data that show operating parameter excursions can result in disproportionately large excursions of hazardous air pollutants being emitted. These short-term data cannot be obtained without the use of continuous emission monitors that measure dioxin/furans, metals, and chlorine on a real-time basis. Such monitors, for the most part, are not currently used for compliance purposes at hazardous waste combustors. However, known relationships between operating parameters and hazardous air pollutant emissions indicate that a nonlinear relationship exists between operating parameter levels and emissions. This nonlinear relationship can result in source emissions that exceed levels demonstrated in the performance test if the operating parameters are not properly controlled. An explanation of these nonlinear relationships, including examples that explain why this relationship can result in daily emissions that exceed levels demonstrated in the performance test, are included in the Final Technical Support Document.[192] Thus, at least in theory, an environmental benefit can result from shorter averaging periods, including ten-minute rolling averages and perhaps instantaneous readings in certain situations.

We also acknowledge, however, that the Agency's ability to assess this potential benefit in practice for all hazardous waste combustors affected by this final rule is limited significantly by the paucity of short-term, minute-by-minute, operating parameter data. Without this data we cannot effectively evaluate whether operating parameter excursions occur to an extent that warrant national ten-minute averaging period requirements for all hazardous waste combustors. We therefore conclude that averaging period requirements shorter than those required by existing BIF regulations are not now appropriate for adoption on a national level, and do not adopt ten-minute averaging period requirements in this rulemaking.

We maintain, however, that there may be site-specific circumstances that warrant averaging periods shorter than one hour in duration, including possibly instantaneous measurements. Regulatory officials may determine, on a site-specific basis, that shorter averaging periods are necessary to better assure compliance with the emission standards. The provisions in § 63.1209(g)(2) authorize the regulatory official to make such a determination. Factors that may be considered when determining whether shorter averaging periods are appropriate include (1) the ability of a source to effectively control operating parameter excursions to levels achieved during the performance test; (2) the source's previous compliance history regarding operating parameter limit exceedances; and (3) the difference between the source's performance test emission levels and the relevant emission standard. For additional information, see the Final Technical Support Document, Volume 4, Chapter 2.

d. What Is the Basis for 12-Hour Rolling Averages for Feedrates? The rule requires 12-hour averages for the feedrate of mercury, semivolatile metals, low volatile metals, chlorine, and ash (for incinerators) because feedrate and emissions are, for the most part, linearly

[190] "Combustion system leaks" is the term used in today's rule to refer to leaks that are called fugitive emissions under current RCRA regulations. We use the term combustion system leaks to refer to those emissions because the term fugitive emissions has other meanings under part 63.

[191] Typical pressure transducers in use today are capable of responding to pressure changes once every fifty milliseconds. See USEPA, "Final Technical Support Document for Hazardous Waste Combustor MACT Standards, Volume IV: Compliance with the Hazardous Waste Combustor Standard," July 1999.

[192] See USEPA, "Final Technical Support Document for Hazardous Waste Combustor MACT Standards, Volume IV: Compliance With the Hazardous Waste Combustor Standards, July 1999, Chapters 2 and 3.

related. A 12-hour averaging period for feedrates is appropriate because it is the upper end of the range of time required to perform three runs of a comprehensive performance test. Thus, a 12-hour averaging period will ensure (if all other factors affecting emissions are constant) that emissions will not exceed performance test levels during any interval of time equivalent to the time required to conduct a performance test. A 12-hour averaging period is also achievable and appropriate from a compliance perspective because the emission standards are based on emissions data obtained over (roughly) these sampling periods.[193]

e. Has the Agency Over-Specified Compliance Requirements? Some commenters state that the Agency is over-specifying compliance requirements by requiring limits on many operating parameters, requiring dual ten-minute and hourly rolling average limits on many parameters, and requiring that sources interlock the operating parameter limits with the automatic waste feed cutoff system. These commenters wrote that this compliance regime may lead to system over-control and instability, and an unreasonable and unnecessary increase in automatic waste feed cutoffs, a result that is contrary to good process control principles. They propose that we work with industry to develop a process control system and performance specification regulatory approach to establish minimum system standards. These would include: (1) Minimum process instrument sampling time; (2) maximum calculation capability for output signals; (3) minimum standard for process control sequences; and (4) minimum requirements for incorporating automatic waste feed cutoffs into the control scheme. The specifications would be incorporated into guidance, rather than regulation. Commenters suggest that the rule should only specify general goals, similar to the guidance approach we took for hazardous waste incinerators in the 1981 RCRA regulations.[194]

We evaluated these comments carefully, balancing the need to provide industry with operational flexibility with the need for compliance assurance. As previously discussed, we are not adopting ten-minute averaging period requirements in this rulemaking, although it can be imposed on a site-specific basis under appropriate circumstances. This addresses commenter's concerns that relate to the complexity of the proposed dual averaging period requirements. We acknowledge, however, that today's rule requires that more operating parameter limits be interlocked to the automatic waste feed cutoff system than is currently required by RCRA regulations. Nonetheless, we conclude that the compliance regime of today's final rule is necessary to ensure compliance with the emission standards and will not overly constrain process control systems for the following reasons.

Automatic waste feed cutoffs are (by definition) automatic, and the control systems used to avoid automatic waste feed cutoffs require adequate response time and are primarily site-specific in design. The closer a source pushes the edge of the operating envelope, the better that control system must perform to ensure that an operating parameter limit (and emission standard) is not exceeded. Therefore, a source has extensive control over the impact of these requirements.

Under the compliance regime of today's rule, sources will continue to perform comprehensive performance testing under "worst case" conditions as they currently do under RCRA requirements to establish limits on operating parameters that are well beyond normal levels. This cushion between normal operating levels and operating parameter limits enables the source to take corrective measures well before a limit is about to be exceeded, thus avoiding an automatic waste feed cutoff.

Regulatory officials do not have the extensive resources that would be required to develop and implement industry-specific control guidelines and we are not confident that this approach would provide adequate compliance assurance. Although specifying only emissions standards and leaving the compliance method primarily up to the source and the permit writer (aided by guidance) would provide flexibility, it would place a burden on the permit writers and the source during the development and approval of the performance test plan and the finding of compliance subsequent to Notification of Compliance. In addition, this level of interaction between permitting officials and the source is contrary to our policy of structuring the MACT standards to be as self-implementing as possible.[195] The Agency therefore maintains its position that the compliance scheme adopted in today's rule, is appropriate.

f. Why Isn't Risk Considered in Determining Averaging Periods? Several commenters state that long averaging periods (e.g., monthly metal feedrate rolling averages) for the operating parameter limits and CEMS-monitored emission standards would be appropriate. These commenters believe that long averaging periods would be appropriate given that the Agency has performed a risk assessment and concluded that the emission standards would be protective over long periods of exposure. They state that long averaging periods would ensure that emissions are safe and reduce compliance costs.

Consideration of risk is not an appropriate basis for determining averaging periods to ensure compliance with the technology-based MACT emission standards.[196] As previously stated, we must establish averaging periods that ensure compliance with the emission standard for time durations equivalent to the emission sampling periods used to demonstrate compliance. Longer averaging periods would not ensure compliance with the emission standard because many of the operating parameters do not relate to emissions linearly.

In addition, a longer averaging period is not warranted even for those operating parameters than may relate linearly to emissions because this would allow a source to emit hazardous air pollutants in excess of the emission standard for times periods equivalent to the stack emission sampling periods used to demonstrate compliance. For example, a monthly averaging period for metal feedrates could result in a source emitting metals at a level three times the regulatory standard continuously for a one week period.[197] This would not be consistent with the level of control that was achieved by the best performing sources in our data base. Modifying the results of the MACT process based on risk considerations is thus contrary to Congressional intent that MACT

[193] See *Chemical Waste Management* v. *EPA*, 976 F.2d. 2, 34 (D.C. Cir. 1992) (It is inherently reasonable to base compliance on the same type of data used to establish the requirement).

[194] The incinerator regulations promulgated in 1981, at the outset of the RCRA regulatory program, used such a general guidance approach. However, sources have had over 15 years since then to gain experience with process control techniques associated with the combustion of hazardous waste.

[195] The time that would be associated with this type of review and negotiation between permit writer and source would be better spent on developing, reviewing, and approving the comprehensive performance test plan under today's compliance regime.

[196] We note, however, that within eight years of promulgating MACT standards for a source category, we must consider risk in determining under section 112(f) whether standards more stringent than MACT are necessary to provide an ample margin of safety to protect public health and the environment.

[197] For this to occur, the source would have to emit metals far below the standard for time periods before and after this one-week period.

standards, at a minimum, must represent the level of control being achieved by the average of the best performing 12 percent of the sources. We therefore conclude that we must limit averaging times at least to time durations equivalent to the emission sampling periods used to demonstrate compliance.

g. Will Relaxing Feedrate Averaging Times Increase Environmental Loading? One commenter questions whether relaxing the averaging time for the feedrate of metals and chlorine from an hourly rolling average under current RCRA regulations to the 12-hour rolling average of today's rule would increase total environmental loading of pollutants and be counter to the Agency's pollution prevention objectives. Contrary to the commenter's concern, we conclude that today's rule will decrease environmental loading of hazardous air pollutants because the emission standards are generally more stringent than current RCRA standards. Today's standards more than offset any difference in environmental loading associated with longer averaging times. As previously discussed, the averaging periods in today's rule were chosen to ensure compliance with the emission standard for intervals of time equivalent to the time required to conduct a performance test.

Although current RCRA standards generally establish hourly rolling averages for the feedrate of metals, sources are actually allowed to establish up to 24-hour rolling averages for arsenic, beryllium, chromium, cadmium, and lead, provided they restrict the feedrate of these metals at any time to ten times what would be normally allowed under an hourly rolling average basis. For these reasons, the commenter's concern is not persuasive.

3. How Are Performance Test Data Averaged To Calculate Operating Parameter Limits?

The rule specifies which of two techniques you must use to average data from the comprehensive performance test to calculate limits on operating parameters: (1) Calculate the limit as the average of the maximum (or minimum, as specified) rolling averages for each run of the test; or (2) calculate the limit as the average of the test run averages for each run of the test.

Hourly rolling averages for two parameters—combustion gas flowrate (or kiln production rate as a surrogate) and hazardous waste feedrate—are based on the average of the maximum hourly rolling averages for each run. Hourly rolling average and 12-hour rolling average limits for all other parameters, however, are based on the average level occurring during the comprehensive performance test. We determined that this more conservative approach is appropriate for these parameters because they can have a greater effect on emissions, and because it is consistent with how manual method emissions results are determined.[198]

These are examples of how the averages work. The hourly rolling average hazardous waste feedrate limit for a source is calculated using the first technique. If the highest hourly rolling averages for each run of the comprehensive performance test were 200 lbs/hour, 210 lbs/hr, 220 lbs/hr, the hourly rolling average feedrate limit would be 210 lbs/hr.

The second approach uses the average of the test run averages for a given test condition to calculate the limit. Each test run average is calculated by summing all the one-minute readings within the test run and dividing that sum by the number of one-minute readings. For example, if: (1) The sum of all the one-minute semivolatile metal feedrate readings for each run within a test condition is 2,400 lbs/hour, 2,500 lbs/hour, and 2,600 lbs/hour; and (2) there are 240, 250, and 200 one-minute readings in each run, respectively; then (3) the average feedrate for each of these three runs is 10 lbs/hour, 10 lbs/hour, and 13 lbs/hour, respectively. The 12-hour rolling average semivolatile metal feed rate limit for this example is the average of these three values: 11 lbs/hour. This averaging methodology is not equivalent to an approach where the limit is calculated by taking the time-weighted average over all three runs within the test condition, because, as noted by the example, sampling times may be different for each run. The time-weighted average feedrate over all three test runs for the previous example is equivalent to 10.9 lbs/hr.[199] Although the two averaging techniques may not result in averages that are significantly different, we conclude that basing the limits on the average of the test run averages is more appropriate, because this approach is identical to how we determine compliance with the emission standards.

These averaging techniques are the same as we proposed (see 61 FR at 17418).[200] A number of commenters object to the more conservative second technique of basing the limits on the average levels that occur during the test. The commenters claim that this approach ensures a source would not comply with the limits 50% of the time when operating under the same conditions as the performance test. Further, they are concerned that this approach would establish operating parameter limits that would "ratchet" emissions to levels well below the standards, and further ratcheting would occur with each subsequent performance test (i.e., because the current operating limits could not be exceeded during subsequent performance testing). Some commenters prefer the approach of setting the limit as the average of the highest (or lowest) rolling average from each run, technique one above, which is the same approach used in the BIF rule.

Notwithstanding the conservatism of the promulgated approach (technique two above) for many operating parameter limits, we maintain that the approach results in achievable limits and is necessary to ensure compliance with the emission standards. Comprehensive performance tests are designed to demonstrate compliance with the emission standards and establish corresponding operating parameter limits. Thus, sources will operate under "worst-case" conditions during the comprehensive performance tests, just as they do currently for RCRA trial burns. Given that the source can readily control (during the performance test and thereafter) the parameters for which limits are established based on the average of the test run averages during performance testing (i.e., rather than on the average of the highest (or lowest) hourly rolling averages), and that these parameters will be at their extreme levels during the performance test, the limits are readily achievable.

There may be situations, however, where a source cannot simultaneously demonstrate worst-case operating conditions for all the regulated operating parameters. An example of this may be minimum combustion chamber temperature and maximum temperature at the inlet to the dry particulate matter control device because when the combustion chamber temperature is minimized, the inlet temperature to the control device may also be minimized. Sources should consult permitting officials to resolve

[198] Manual method emission test results for each run represents average emissions over the entire run.

[199] This time weighted average is calculated by summing all the one-minute feedrate values in the test condition and dividing that sum by the number of one minute readings in the test condition.

[200] Except that average hourly rolling average limits are calculated as the average of the test run averages rather than simply the average over all runs as proposed.

compliance difficulties associated with conflicting operating parameters. Potential solutions to conflicting parameters could be to conduct the performance test under two different modes of operation to set these conflicting operating parameter limits, or for the Administrator to use the discretionary authority provided by § 63.1209(g)(2) to set alternative operating parameter limits.

We address commenters' concern that subsequent performance tests would result in a further ratcheting down of operating parameter limits by waiving the operating limits during subsequent comprehensive performance tests (see § 63.1207(h)). The final rule also waives operating limits for pretesting prior to comprehensive performance testing for a total operating time not to exceed 720 hours. See discussion in Part Five, Section VI for more information on this provision.

Some commenters suggest that we use a statistical analysis to determine rolling average limits, such that the limits are calculated as the mean plus or minus three standard deviations of all rolling averages for all runs. Commenters state that this would ensure that the operating parameter limits are achievable. If such an approach were adopted, there would be no guarantee that a source is maintaining compliance with the emission standards for the time durations of the manual stack sampling method used to demonstrate compliance during the comprehensive performance test. Such an approach could conceivably encourage a source to intentionally vary operating parameter levels during the comprehensive performance test to such an extent that the statistically-derived rolling average limits would be significantly higher than the true average of the test condition. This could also result in widely varying statistical correction factors from one source to another, which is undesirable for reasons of consistency and fairness.

Such a statistical approach prevents us from establishing the minimum emission standards that Congress generally envisioned under MACT because we would not be assured that the sources are achieving the emission standard. We would also have difficulty estimating environmental benefits if this statistical approach were used because we would not know what level of emission control each source achieves. Again, the methodology promulgated for averaging performance test data to calculate operating parameter limits results in limits that are achievable and necessary to ensure compliance with the emission standards for time durations equivalent to emission sampling periods.

Several commenters oppose the compliance regime whereby limits on operating parameters are established during performance testing. They are concerned that this approach encourages sources to operate under worst-case conditions during testing. One commenter states that this approach effectively punishes sources for demonstrating emissions during their performance test that are lower than the standards (i.e., by establishing limits on operating parameters that would be well below those needed to comply with the standards).

We understand these concerns, but absent the availability of continuous emissions monitoring systems, we are unaware of another compliance assurance approach that effectively addresses the (perhaps unique) problem posed by hazardous waste combustors. The Agency is using this same approach to implement the RCRA regulations for these sources. Compliance assurance for hazardous waste combustors cannot be maintained using the general provisions of Subpart A in Part 63—procedures that apply to all MACT sources unless we promulgate superseding provisions for a particular source category. Those procedures require performance testing under normal operating conditions, but operating limits are not established based on performance test operations. This approach is appropriate for most industrial processes because process constraints and product quality typically limit "normal" operations to a fairly narrow range that is easily defined.

Hazardous waste combustors may be somewhat unique MACT sources, however, in that the characteristics of the hazardous waste feed (e.g., metals concentration, heating value) can vary over a wide range and have a substantial effect on emissions of hazardous air pollutants. In addition, system design, operating, and maintenance features can substantially affect pollutant emissions. This is not the same situation for many other MACT source categories where feedstream characteristics and system design, operation, and maintenance features must be confined to a finite range so that the source can continue to produce a product. Hazardous waste incinerators do not have such inherent controls (i.e., because they provide a waste treatment service rather than produce a product), and cement and lightweight aggregate kilns can vary substantially hazardous waste characteristics in the fuel, as well as system design, operation, and maintenance features and still produce marketable product.

To address commenters' concerns at least in part, however, we have included a metals feedrate extrapolation provision in the final rule. This will reduce the incentive to spike metals in feedstreams during performance testing (and thus reduce the cost of testing, the hazard to test crews, and the environmental loading) by explicitly allowing sources to request approval to establish metal feedrate limits based on extrapolating upward from levels fed during performance testing. See discussion in Section VII.D.4 below, and §§ 63.1209(l)(1) and 63.1209(n)(2)(ii).

4. How Are the Various Types of Operating Parameters Monitored or Established?

The operating parameters for which you must establish limits can be categorized according to how they are monitored or established as follows: (1) Operating parameters monitored directly with a continuous monitoring system; (2) feedrate limits; and (3) miscellaneous operating parameters. (Each of these parameters is discussed in Section VII.D below.)

a. What Operating Parameters Are Monitored Directly with a Continuous Monitoring System? Operating parameters that are monitored directly with a continuous monitoring system include: Combustion gas temperature in the combustion chamber and at the inlet to a dry particulate matter control device; baghouse pressure drop; for wet scrubbers, pressure drop across a high energy wet scrubber (*e.g.*, venturi, calvert), liquid feed pressure, pH, liquid-to-gas ratio, blowdown rate (coupled with either a minimum recharge rate or a minimum scrubber water tank volume or level), and scrubber water solids content; minimum power input to each field of an electrostatic precipitator; flue gas flowrate or kiln production rate; hazardous waste flowrate; and adsorber carrier stream flowrate. These operating parameters are monitored and recorded on a continuous basis during the comprehensive performance test and during normal operations. The continuous monitoring system also transforms and equates the data to its associated averaging period during the performance test so that operating parameter limits can be established. The continuous monitoring system must operate in conformance with § 63.1209(b).

b. How Are Feedrate Limits Monitored? Feedrate limits are monitored by knowing the concentration of the regulated parameter

in each feedstream and continuously monitoring the flowrate of each feedstream. See § 63.1209(c)(4). You must establish limits on the feedrate parameters specified in § 63.1209, including: semivolatile metals, low volatile metals, mercury; chlorine, ash (for incinerators), activated carbon, dioxin inhibitor, and dry scrubber sorbent. The flowrate continuous monitoring system must operate in conformance with § 63.1209(b).

c. How Are the Miscellaneous Operating Parameters Monitored/Established? Other operating parameters specified in § 63.1209 include: Specifications for activated carbon, acid gas sorbent, catalyst for catalytic oxidizers, and dioxin inhibitor; and maximum age of carbon in a carbon bed. Because each of these operating parameters may be unique to your source, you are expected to characterize the parameter (*e.g.*, using manufacturer specifications) and determine how it will be monitored and recorded. This information must be included in the comprehensive performance test plan that will be reviewed and approved by permitting officials.

5. How Are Rolling Averages Calculated Initially, Upon Intermittent Operations, and When the Hazardous Waste Feed Is Cut Off?

a. How Are Rolling Averages Calculated Initially? You must begin complying with the limits on operating parameters specified in the Documentation of Compliance on the compliance date.[201] See § 63.1209(b)(5)(i). Given that the one-hour, and 12-hour rolling averages for limits on various parameters must be updated each minute, this raises the question of how rolling averages are to be calculated upon initial startup of the rolling average requirements. We have determined that an operating parameter limit will not become effective on the compliance date until you have recorded enough monitoring data to calculate the rolling average for the limit. For example, the hourly rolling average limit on the temperature at the inlet to an electrostatic precipitator does not become effective until you have recorded 60 one-minute average temperature values on the compliance date. Given that compliance with the standards begins nominally at 12:01 am on the compliance date, the hourly rolling average temperature limit does not become effective as a practical matter until 1:01 am on the compliance date. Similarly, the 12-hour rolling average limit on the feedrate of mercury does not become effective until you have recorded 12 hours of one-minute average feedrate values after the compliance date. Thus, the 12-hour rolling average feedrate limits become effective as a practical matter at 12:01 pm on the compliance date.

Although we did not specifically address this issue at proposal, commenters raised the question in the context of CEMS. Given that the same issue applies to all continuous monitoring systems, we adopt the same approach for all continuous monitoring systems, including CEMS. See discussion below in Section VII.C.5.b. We adopt the approach discussed here because a rolling average limit on an operating parameter does not exist until enough one-minute average values have been obtained to calculate the rolling average.

b. How Are Rolling Averages Calculated upon Intermittent Operations? We have determined that you are to ignore periods of time when one-minute average values for a parameter are not recorded for any reason (*e.g.*, source shutdown) when calculating rolling averages. See § 63.1209(b)(5)(ii). For example, consider how the hourly rolling average for a parameter would be calculated if a source shuts down for yearly maintenance for a three week period. The first one-minute average value recorded for the parameter for the first minute of renewed operations is added to the last 59 one-minute averages before the source shutdown for maintenance to calculate the hourly rolling average.

We adopt this approach for all continuous monitoring systems, including CEMS (see discussion below in Section VII.C.5.b) because it is simple and reasonable. If, alternatively, we were to allow the "clock to be restarted" after an interruption in recording parameter values, a source may be tempted to "clean the slate" of high values by interrupting the recording of the parameter values (*e.g.*, by taking the monitor off-line for a span or drift check). Not only would this mean that operating limits would not be effective again until an averaging period's worth of values were recorded, but it would be contrary to our policy of penalizing a source for operating parameter limit exceedances by not allowing hazardous waste burning to resume until the parameter is within the limit. Not being able to burn hazardous waste during the time that the parameter exceeds its limit is intended to be an immediate economic incentive to minimize the frequency, duration, and intensity of exceedances.

c. How Are Rolling Averages Calculated when the Hazardous Waste Feed Is Cut Off? Even though the hazardous waste feed is cut off, you must continue to monitor operating parameters and calculate rolling averages for operating limits. See § 63.1209(b)(5)(iii). This is because the emission standards and operating parameter limits continue to apply even though hazardous waste is not being burned. See, however, the discussion in Part Five, Sections I.C and I.D above for exceptions (*i.e.*, when a hazardous waste combustor is not burning hazardous waste, the emission standards and operating requirements do not apply: (1) During startup, shutdown, and malfunctions; or (2) if you document compliance with other applicable CAA section 112 or 129 standards).

6. How Are Nondetect Performance Test Feedstream Data Handled?

You must establish separate feedrate limits for semivolatile metal, low volatile metal, mercury, total chlorine, and/or ash for each feedstream for which the comprehensive performance test feedstream analysis determines that these parameters are not present at detectable levels. The feedrate limit must be defined as nondetect at the full detection limit achieved during the performance test. See § 63.1207(n).

You will not be deemed to be exceeding this feedrate limit when detectable levels of the constituent are measured, provided that: (1) Your total system constituent feedrate, considering the detectable levels in the feedstream (whether above or below the detection limit achieved during the performance test) that is limited to nondetect levels, is below your total system constituent feedrate limit; or (2) except for ash, your uncontrolled constituent emission rate for all feedstreams, calculated in accordance with the procedures outlined in the performance test waiver provisions (see § 63.1207(m)) are below the applicable emission standards.

We did not address in the April 1996 NPRM how you must handle nondetect compliance test feedstream results when determining feedrate limits, nor did commenters suggest an approach. After careful consideration, we conclude that the approach presented above is reasonable and appropriate.

The LWAK industry has expressed concern about excessive costs with compliance activities that would be needed for the mercury standard. They

[201] The operating parameters for which you must specify limits are provided in § 63.1209. You must include these limits in the Documentation of Compliance, and you must record the Documentation of Compliance in the operating record.

claim that the increased costs associated with achieving lower mercury detection limits are large, and does not result in significant environmental benefits.

The final rule includes four different methods an LWAK can use to comply with the mercury emission standard in order to provide maximum flexibility. The basic compliance approach (described below) does not require an LWAK to achieve specified minimum mercury detection limits for mercury standard compliance purposes.[202] Under this approach, analytical procedures that achieve given detection limits are evaluated on a site-specific basis as part of the waste analysis plan review and approval process, which is submitted as part of the performance test plan. An LWAK can make the case to the regulatory official that the increased costs associated with achieving a very low mercury detection limit is not warranted. We therefore do not believe that the LWAK industry will incur significant additional analytical costs over current practices for daily mercury compliance activities. We acknowledge, however, that site-specific circumstances may lead a regulatory official to conclude that lower detection limits are warranted. To better understand this concept, the following paragraphs summarize this basic mercury emission standard compliance scheme and discusses why a regulatory official may determine, on a site-specific basis, that lower detection limits are needed to better assure compliance with the emission standard.

Under this basic approach, the source conducts a performance test and samples the emissions for mercury to demonstrate compliance with the emission standard. To ensure compliance with the emission standard during day-to-day operations, the source must comply with mercury feedrate limits that are based on levels achieved during the performance test. A source must establish separate mercury feedrate limits for each feed location. As previously discussed in this section, for feedstreams where mercury is not present at detectable levels, the feedrate limit must be defined as "nondetect at the full detection limit".

There is no regulatory requirement for a source to achieve a given detection limit under this approach. We acknowledge, however, that feedstream detection limits can be high enough such that a mercury feedrate limit that is based on nondetect performance test results may not completely ensure compliance with the emission standard during day-to-day operations. For example, the LWAK industry has indicated that a hazardous waste mercury detection limit of 2 ppm is reasonably achievable at an on-site laboratory. If we assume that mercury is present in the hazardous waste at a concentration of 1.99 ppm (just below the detection limit), the expected mercury emission concentration would be approximately 80 μg/dscm, which is above the standard.[203] (Note also that this does not consider mercury emission contributions from the raw material.) This is not to say that this LWAK will be exceeding the mercury emission standard during day-to-day operations. However, their inability to achieve low mercury detection limits results in less assurance that the source is continuously complying with the emission standard.

The regulatory official should consider such emission standard compliance assurance concerns when reviewing the waste analysis plan to determine if lower detection limits are appropriate (if, in fact such lower detection limits are reasonably achievable). Factors that should be considered in this review should include: (1) The costs associated with achieving lower detection limits; and (2) the estimated maximum mercury concentrations that can occur if the source's feedstreams contain mercury just below the detection limit (as described above).

C. Which Continuous Emissions Monitoring Systems Are Required in the Rule?

Although the final rule does not require you to use continuous emissions monitoring systems (CEMS) for parameters other than carbon monoxide, hydrocarbon, oxygen, and particulate matter[204] we have a strong preference for CEMS because they: (1) Are a direct measure of the hazardous air pollutant or surrogate for which we have established emission standards; (2) lead to a high degree of certainty regarding compliance assurance; and (3) allow the public to be better informed of what a source's emissions are at any time. Additionally, from a facility standpoint, CEMs provide you with real time feedback on your combustion operations and give you a greater degree of process control. Therefore, we encourage you to use CEMS for other parameters such as total mercury, multimetals, hydrochloric acid, and chlorine gas. You may use the alternative monitoring provision of § 63.8(f) to petition the Administrator (i.e., permitting officials) to use CEMS to document compliance with the emission standards in lieu of emissions testing and the operating parameter limits specified in § 63.1209. You may submit the petition at any time, such as with the comprehensive performance test plan. See Section VII.C.5.c below for a discussion of the incentives for using CEMS.

In this section, we discuss the status of development of particular CEMS and provide guidance on issues that pertain to case-by-case approval of CEMS in lieu of compliance using operating parameter limits and periodic emissions testing. Key issues include appropriate CEMS performance specifications, reference methods for determining the performance of CEMS, averaging periods, and temporary waiver of emission standards if necessary to enable sources to correlate particulate matter CEMS to the reference method.

1. What Are the Requirements and Deferred Actions for Particulate Matter CEMS?

In the April 1996 NPRM, we proposed the use of particulate matter CEMS to document compliance with the particulate matter emission standards. Particulate matter CEMS are used for compliance overseas[205], but are not yet a regulatory compliance tool in the U.S. Concurrent with this proposal, we undertook a demonstration of particulate matter CEMS at a hazardous waste incinerator to determine if these CEMS were feasible in U.S. applications. We selected the test incinerator as representative of a worst-case application for a particulate matter CEMS at any hazardous waste

[202] The other three approaches are (1) performance test waiver provisions (see preamble, part 5, section X.B); (2) alternative standards when raw materials cause an exceedance of the emission standard (see preamble, part 5, section X.A); and, (3) alternative mercury standards for kilns that have non-detect levels of mercury in the raw material (see preamble, part 5, section X.A). These mercury standard compliance alternatives require a source to achieve feedstream detection limits that either ensure compliance with an emission standard or ensure compliance with a hazardous waste feedrate limit that is used in lieu of a numerical emission standard. See previous referenced preamble for further discussion.

[203] This assumes that all the mercury fed to the unit is emitted, and is based on typical LWAK gas emission rates.

[204] The final rule requires that particulate matter CEMS be installed, but defers the effective date of the requirement to install, calibrate, maintain, and operate PM CEMS until these actions can be completed.

[205] The EU guidelines for hazardous waste combustion state that particulate matter is a parameter for which compliance must be documented continuously. In addition, proposals from vendors that we received in response to our February 27, 1996 NODA (see 61 FR 7262) indicate that there are many installations elsewhere overseas where particulate matter CEMS are used for compliance assurance.

combustor. It was important to document feasibility of the CEMS at a worst-case application to minimize time and resources needed to determine whether the CEMS were suitable for compliance assurance at all hazardous waste combustors.

We published preliminary results of our CEMS testing and sought comment on our approach to demonstrating particulate matter CEMS in the March 1997 NODA. We then revised our approach and sought comment on the final report in the December 1997 NODA. The December 1997 NODA also clarified several issues that came to light during the demonstration test pertaining to the manual reference method, particulate matter CEMS, and general quality assurance issues. These clarifications were embodied in a new manual method, Method 5–I (Method 5i), a revision to the proposed Performance Specification 11 for particulate matter CEMS, and a new quality assurance procedure, Procedure 2.

We believe that our tests adequately demonstrate that particulate matter CEMS are a feasible, accurate, and reliable technology that can and should be used for compliance assurance. In addition, preliminary analyses of the cost of PM CEMS applied to hazardous waste combustors suggest that these costs are reasonable. Accordingly, the final rule contains a requirement to install PM CEMS. However, we agree with comments that indicate a need to develop source-specific performance requirements for particulate matter CEMS and to resolve other outstanding technical issues. These issues include all questions related to implementation of the particulate matter CEMS requirement (i.e. relation to all other testing, monitoring, notification, and recordkeeping), relation of the particulate matter CEMS requirement to the PM emission standard, as well as technical issues involving performance, maintenance and correlation of the particulate matter CEMS itself. These issues will be addressed in a subsequent rulemaking. Therefore, we defer the effective date of this requirement pending further testing and additional rulemaking.

As a result, in today's final rule, we require that particulate matter CEMS be installed at all hazardous waste burning incinerators, cement kilns, and lightweight aggregate kilns. However, since we have not finalized the performance specifications for the use of these instruments or resolved some of the technical issues noted above, we are deferring the effective date of the requirement to install, calibrate, maintain and operate particulate matter CEMS until these actions can be completed. The particulate matter CEMS installation deadline will be established through future rulemaking, along with other pertinent requirements, such as final Performance Specification 11, Appendix F Procedure 2. Finally, it should be noted that EPA has a concurrent rulemaking process underway for nonhazardous waste burning cement kilns and plans to adopt the same approach in that rule.

2. What Are the Test Methods, Specifications, and Procedures for Particulate Matter CEMS?

a. What Is Method 5i? We promulgate in the final rule a new manual method for measuring particulate matter, Method 5i. See appendix A to part 60. We first published this new method in the December 1997 NODA. One outgrowth of these particulate matter CEMS demonstration tests is that we made significant improvements in making low concentration Method 5 particulate measurements. We first discussed these improvements in the preliminary report released in the March 1997 NODA, and commenters to that NODA ask that these improvements be documented. We documented these improvements by creating Method 5i.

We incorporated the following changes to Method 5 into Method 5i: Improved sample collection: minimization of possible contamination; Improved sample analysis; and an overall emphasis on elimination of systemic errors in measurement. These improvement achieved significant improvements in method accuracy and precision at low particulate matter concentrations, relative to Method 5.

We are promulgating Method 5i today, in advance of any particulate matter CEMS requirement, for several reasons. We expect this new method will be preferred in all cases where low concentration (i.e., below 45 mg/dscm (~0.02 gr/dscf) [206]) measurements are required for compliance with the standard. Given that all incinerators, nearly all lightweight aggregate kilns, and some cement kilns are likely to have emissions lower than 45 mg/dscm, we expect that Method 5i will become the particulate method of choice for most hazardous waste combustors. In addition, we expect that Method 5i will be used to correlate manual method results to particulate matter CEMS outputs for those sources that elect to petition the Administrator to use a CEMS in lieu of operating parameter limits for compliance assurance with the particulate matter standard.[207] This is because, unlike the worst-case particulate matter measurements normally used to verify compliance with the standard, low (or lower than normal) concentration particulate matter data are required to develop a good correlation between the CEMS output and the manual, reference method.

Many of the issues commenters raise relate to how Method 5i should be used to correlate particulate matter CEMS outputs to manual method measurements. Even though we are deferring a CEMS requirement, we address several key issues here given that sources may elect to petition the Administrator under § 63.8(f) to use a CEMS. This discussion may provide a better understanding on our thinking on particulate matter CEMS issues. In addition, certain comments are specific to how Method 5i is performed. These comments and our responses are relevant even if you use Method 5i only as a stack particulate method and not to correlate a particulate matter CEMS to the reference method.

i. Why Didn't EPA Validate Method 5i Against Method 5? Several commenters recommend that we perform a full Method 301 validation to confirm that Method 5i is equivalent to Method 5. We determined that a full Method 301 validation is not necessary because the differences in the two methods do not constitute a major change in the way particulate samples are collected from an operational or an analytical standpoint. We validated the filter extraction and weighting process—the only modification from Method 5 (see "Particulate Matter CEMS Demonstration Test Final Report," Appendix A, in the Technical Support Document [208]) " and documented that Method 5i gives nearly identical results as Method 5. Therefore, we disagree with the commenters' underlying concern and conclude that Method 5i has been validated.

ii. When Are Paired Trains Required? We have included in Method 5i a requirement that paired trains must be

[206] As noted later in the text, the filter and assembly used for Method 5i is smaller than the one used for Method 5. This means that the Method 5i filter plugs more easily than the one used for Method 5. This issue becomes important at particulate matter concentrations above 45 mg/dscm, or 0.02 gr/dscf.

[207] As alluded to previously, sources may elect to use a CEMS to comply with the numerical value of the particulate matter emission standard on a six-hour rolling average in lieu of complying with operating parameter limits specified by § 63.1209(m).

[208] See USEPA, "Final Technical Support Document for Hazardous Waste Combustor MACT Standards, Volume IV: Compliance With the Hazardous Waste Combustor Standards," July 1999.

used to increase method precision. This requirement applies whether you use Method 5i to demonstration compliance with the emission standard or to correlate a particulate matter CEMS. In addition, if you elect to petition the Administrator for approval to use a particulate matter CEMS and elect to use Method 5 to correlate the CEMS, you must also obtain paired Method 5 data to improve method precision and, thus, the correlation.

During our CEMS testing, we collected particulate matter data using two simultaneously-conducted manual method sampling trains. We called the results from these simultaneous runs "paired data." We discussed the use of paired trains in the December 1997 NODA as being optional but requested comment on whether we should require paired trains, state a strong preference for them, or be silent on the issue. Many commenters believe paired trains should be used at all times so precision can be documented. With these comments in mind, and consistent with our continued focus on the collection of high quality emission measurements, we include a requirement in Method 5i to obtain paired data. Method 5i also includes a minimum acceptable relative standard deviation between these data pairs. As discussed below, both data in the pair are rejected if the data exceed the acceptable relative standard deviation.

To improve the correlation between the manual method and a particulate matter CEMS, we also recommend that sources electing to use Method 5 also obtain paired Method 5 data. Again, data sets that exceed an acceptable relative standard deviation, as discussed below, should be rejected. This recommendation will be implemented during the Administrator's review of your petition requesting use a particulate matter CEMS. If you elect to correlate the CEMS using Method 5, you are expected to include in your petition a statement that you will obtain paired data and will conform with our recommended relative standard deviation for the paired data.

iii. What Are the Procedures for Identifying Outliers? We have established maximum relative standard deviation values for paired data for both Method 5i and Method 5. If a data pair exceed the relative standard deviation, the pair is identified as an outlier and is not considered in the correlation of a particulate matter CEMS with the reference method. In addition, Method 5i pairs that exceed the relative standard deviation are considered outliers and cannot be used to document compliance with the emission standard.

In the initial phase of our CEMS tests, we established a procedure for eliminating imprecise data. This consisted of eliminating a set of paired data if the data disagree by more than some previously established amount. Two identical methods running at the same time should yield the same result; if they do not, the precision of both data is suspect. Commenters agree with the need to identify and eliminate imprecise data to enhance method precision. This is an especially important step when comparing manual particulate matter measurements to particulate matter CEMS measurements. As a result, we include criteria in Method 5i to ensure data precision.

When evaluating the particulate matter CEMS Demonstration Test data, we screened the data to remove these precision outliers. Data outliers at that time were defined as paired data points with a relative standard deviation [209] of greater than 30 percent. We developed this 30% criterion by analyzing historical Method 5 data. Several commenters, including a particulate matter CEMS vendor with extensive European experience with correlation programs, recommend that we tighten the relative standard deviation criteria. We concur, because Method 5i is more precise than Method 5 given the improvements discussed above. Therefore, one would logically expect a reasonable precision criterion such as the relative standard deviation derived from Method 5i data to be less than a similarly reasonable one derived from Method 5 data. We investigated the particulate matter CEMS Demonstration Test data base as well other available Method 5i data (such as the data from a test program recently conducted at another US incinerator). We conclude that a 10% relative standard deviation for particulate matter emissions greater than or equal to 10 mg/dscm, increased linearly to 25% for concentrations down to 1 mg/dscm, is a better representation of acceptable, precise Method 5i paired data [210]. Data obtained at concentrations lower than 1 mg/dscm have no relative standard deviation limit.

The relative standard deviation criterion for Method 5 data used for particulate matter CEMS correlations continues to be 30%.

iv. Why Didn't EPA Issue Method 5i as Guidance Rather than Promulgating It as a Method? Most commenters state that Method 5i should be guidance rather than a published method and it should not be a requirement for performing particulate matter CEMS correlation testing or documenting compliance with the emission standard. In particular, several commenters in the cement kiln industry express concern over the limitations of Method 5i regarding the mass of particulate it could collect. This section addresses these concerns.

We have promulgated Method 5i as a method because it provides significant improvement in precision and accuracy of low level particulate matter measurements relative to Method 5. Consequently, although Method 5i is not a required method, we expect that permitting officials will disapprove comprehensive performance test plans that recommend using Method 5 for low level particulate levels. Further, we expect that petitions to use a particulate matter CEMS that recommend performance acceptance criteria (e.g., confidence level, tolerance level, correlation coefficient) based on correlating the CEMS with Method 5 measurements will be disapproved. This is because we expect the CEMS to be able to achieve better acceptance criteria values using Method 5i (because it is more accurate and precise than Method 5), and expect better relative standard deviation between test pairs (resulting in lower cost of correlation testing because fewer data would be screened out as outliers).

Given that we expect and want widespread use of Method 5i, and to ensure that its key provisions are followed, it is appropriate to promulgate it as a method rather than guidance. If the procedure were issued only as guidance, the source or stack tester could choose to omit key provisions, thus negating the benefits of the method.

Relative to the direct reference in Method 5i that the method is "most effective for total particulate matter catches of 50 mg or less," this means the method is most effective at hazardous waste combustors with particulate matter emissions below approximately 45 mg/dscm (~0.02 gr/dscf). This applicability statement is not intended to be a bright line; total train catches exceeding 50 mg would not invalidate

[209] RSD, or "relative standard deviation", is a dimensionless number greater than zero defined as the standard deviation of the samples, divided by the mean of the samples. In the special case where only 2 data represent the sample, the mathematics of determining the relative standard deviation simplifies greatly to $|C_A - C_B|/(C_A + C_B)$, where C_A and C_B are the concentration results from the two trains that represent the pair.

[210] See Chapter 11, Section 2 of the technical background document for details on the statistical procedures used to derive these benchmarks: USEPA, "Final Technical Support Document for Hazardous Waste Combustor MACT Standards, Volume IV: Compliance With the Hazardous Waste Combustor Standards," July 1999.

the method. Rather, we include this guidance to users of the method to help them determine whether the method is applicable for their source. Note that this statement is found in the applicability section of the method, rather than the method description sections that follow. As such, the reference is clearly an advisory statement, not a quality assurance criterion. Total train catches above 50 mg are acceptable with the method and the results from such trains can be used to document compliance with the emission standard and for correlating CEMS. But, users of Method 5i are advised that problems (such as plugging of the filter) may arise when emissions are expected to exceed 45 mg/dscm.[211]

v. What Additional Costs Are Associated with Method 5i? Commenters raise several issues regarding the additional costs of performing Method 5i testing relative to using Method 5. There is an added cost for the purchase of new Method 5i filter housings. These new lightweight holders are the key addition to the procedure needed to improve precision and accuracy and represent a one-time expense that emission testing firms or sources that perform testing in-house will have to incur to perform Method 5i. We do not view this cost as significant and conclude that the use of a light-weight filter housing is a reasonable and appropriate feature of the method.

Other commenters suggest that the requirement for pesticide-grade acetone in the version of Method 5i contained in the December 1997 NODA unnecessarily raises the cost of performing the method. Instead, they ask us to identify a performance level for the acetone instead of a grade requirement because it would allow test crews to meet that performance in the most economical manner. We agree that prescribing a certain type of acetone may unnecessarily increase costs and removed the requirement for pesticide-grade acetone. Accordingly, the same purity requirements cited in Method 5 for acetone are maintained for Method 5i. The prescreening of acetone purity in the laboratory prior to field use, consistent with present Method 5 requirements, is also maintained in Method 5i.

Commenters make similar cost-related comments relative to the requirement for Teflon® beakers. At the request of several commenters, we have expanded the requirement for Teflon® beakers to allow the use of beakers made from other similar light-weight materials. Because materials other than Teflon® can be used to fabricate light-weight breakers, changing the requirement from a technology basis to a performance basis will reduce costs while achieving the performance goals of the method.

There were no significant comments regarding the added cost of paired-train testing.

vi. What Is the Practical Quantification Limit of the Method 5i Filter Sample? We received several comments related to the minimum detection limit of Method 5i, including: the minimum sample required, guidance on how long to sample, what mass should ideally be collected on any filter, and the practical quantification limit.

Commenters are concerned that while we address the maximum amount of particulate matter the method could handle, we are silent on the issue of what minimum sample is required. This is important because analytical errors, such as weighing of the filters, tend to have the same error value associated with it irrespective of the mass loading. To address this concern, Method 5i provides guidance on determining the minimum mass of the collected sample based on estimated particulate matter concentrations.

Related to the particulate mass collection issue is the issue of how long a user of Method 5i needs to sample in order to an adequate amount of particulate on the filter. The amount of particulate matter collected is directly related to time duration of the sampling period, i.e., the longer one samples, the more particulate is collected and vice-versa. Therefore, Method 5i provides guidance on selecting a suitable sampling time based on the estimated concentration of the gas stream.

Both these issues directly relate to how much particulate matter should ideally be collected on any individual filter. Our experience indicates a minimum target mass is 10 to 20 mg.

Finally, we conclude that the targeted practical quantification limit for Method 5i is 3.0 mg of sample. Discussion of how this quantification limit is determined is highly technical and beyond the scope of this preamble. See the technical support document for more details.[212]

vii. How Are Blanks Used with Method 5i? Several commenters question the use of acetone blanks or made recommendations for additional blanks. We clarify in this section the collection and use of sample blank data.

We recognize that high blank results can adversely effect the analytical results, especially at low particulate matter concentrations. To avoid the effect high blank results can have on the analytical results, today's Method 5i adopts a strategy similar to several of the organic compound test procedures (such as Method 23 in part 60 and Method 0010 in SW-846) that require collection of blanks but do not permit correction to the analytical results. Collection and analysis of blanks remains an important component in the sampling and analysis process for documenting the quality of the data, however. If a test run has high blank results, the data may be suspect. Permitting officials will address this issue on a case-by-case basis.

The importance of minimizing contamination is stressed throughout Method 5i for both sample handling and use of high purity sample media. If proper handling procedures are observed, we expect that the blank values will be less than the method detection limit or within the value for constant weight determination (0.5 mg). Therefore, the allowance for blank correction that is provided in Method 5 is not permitted in Method 5i. The method also recommends several additional types of blanks to provide further documentation of the integrity and purity of the acetone throughout the duration of the field sampling program.

b. What Is the Status of Particulate Matter CEMS Performance Specification 11 and Quality Assurance/Quality Control Procedure 2? We are not finalizing proposed Performance Specification 11 and Quality Assurance/Quality Control Procedure 2 because the final rule does not require the use of particulate matter CEMS. We considered stakeholder comments on these documents, however, and have incorporated many comments into the current drafts. We plan to publish these documents when we address the particulate matter CEMS requirement. In the interim, we will make them available as guidance to sources that are

[211] Stack testers have developed ways to deal with plugging of a filter. Many stack testers simply remove the filter before it plugs, install a new, clean filter, and continue the sampling process where they left off with the old filter. The mass gain is then the total mass accumulated on all filters during the run. However, using multiple filters for a single run takes more time, not only to install the new filter but also to condition and weigh multiple filters for a single run. For Method 5i, it would also involve more capital cost because the stack tester would need more light-weight filter assemblies to perform the same number of runs. For these reasons and even though the situation can be acceptably managed, it is impractical to have the filter plug. This led to our recommendation that Method 5i is best suited for particulate matter (i.e., filter) loadings of at most 50 mg, or stack concentrations of less than 45 mg/dscm (roughly 0.02 gr/dscf).

[212] See USEPA, "Final Technical Support Document for Hazardous Waste Combustor MACT Standards, Volume IV: Compliance With the Hazardous Waste Combustor Standards," July 1999.

considering the option of using a particulate matter CEMS to document compliance.

c. How Have We Resolved Other Particulate Matter CEMS Issues? In this section we discuss two additional issues: (1) Why didn't we require continuous opacity monitors for compliance with the particulate matter standard for incinerators and lightweight aggregate kilns; and (2) can high correlation emissions testing runs exceed the particulate matter standard?

i. Why Didn't We Require Continuous Opacity Monitors for Compliance Assurance for Incinerators and Lightweight Aggregate Kilns? As discussed elsewhere in today's notice, we require cement kilns to use continuous opacity monitors (COMS) to comply with a 20 percent opacity standard to ensure compliance with the particulate matter emission standard. This is the opacity component of the New Source Performance Standard for particulate matter for Portland cement plants. See § 60.62. Because we are adopting the mass-based portion of the New Source Performance Standard for particulate matter as the MACT standard (i.e., 0.15 kg/Mg dry feed), the opacity component of the New Source Performance Standard is useful for compliance assurance.

We do not require that incinerators and lightweight aggregate kilns use opacity monitors for compliance assurance because we are not able to identify an opacity level that is achievable by sources using MACT control and that would ensure compliance with the particulate matter standards for these source categories. This is the same issue discussed above in the context of particulate matter CEMS and is the primary reason that we are not requiring use of these CEMS at this time.

Although we are requiring that cement kilns use COMS for compliance assurance, these monitors cannot provide the same level of compliance assurance as particulate matter CEMS. Opacity monitors measure a characteristic of particulate matter (i.e., opacity) and cannot correlate with the manual stack method as well as a particulate matter CEMS. COMS are particularly problematic for sources with small stack diameters (e.g., incinerators) and low emissions because both of these factors contribute to very low opacity readings which results in high measurement error as a percentage of the opacity value. Thus, we are obtaining additional data to support rulemaking in the near future to require use of particulate matter CEMS for compliance assurance.

Approximately 80 percent of hazardous waste burning cement kilns are not currently subject to the New Source Performance Standard and many of these sources may not be equipped with COMS that meet Performance Specification 1 in appendix B, part 60. Thus, many hazardous waste burning cement kilns will be required to install COMS, even though we intend to require use of particulate matter CEMS in the near future. We do not believe that this requirement will be overly burdensome, however, because sources may request approval to install particulate matter CEMS rather than COMS. See § 63.8(f). Our testing of particulate matter CEMS at a cement kiln will be completed well before sources need to make decisions on how best to comply with the COMS requirement of the rule. We will develop regulations and guidance on performance specifications and correlation criteria for particulate matter CEMS as a result of that testing, and sources can use that guidance to request approval to use a particulate matter CEMS in lieu of a COMS. We expect that most sources will elect to use this approach to minimize compliance costs over the long term.

ii. Can High Correlation Runs Exceed the Particulate Matter Standard? The final rule states that the particulate matter and opacity standards of parts 60, 61, 63, 264, 265, and 266 (i.e., all applicable parts of Title 40) do not apply during particulate matter CEMS correlation testing, provided that you comply with certain provisions discussed below that ensure that the provision is not abused. This provision, as the rest of the rule, is effective immediately. Thus, you need not wait for the compliance date to take advantage of this particulate matter CEMS correlation test provision.

We include this provision in the rule because many commenters question whether high correlation test runs that exceed the particulate matter emission standard constitute noncompliance with the standard. We have responded to this concern previously by stating that a single manual method test run that exceeds the standard does not constitute noncompliance with the standard because compliance is based on the average of a minimum of three runs.[213] We now acknowledge, however, that during high run correlation testing a source may need to exceed the emission standard even after averaging emissions across runs. Similarly, a source may need to exceed a particulate matter operating parameter limit. Given the benefits of compliance assurance using a CEMS, we agree with commenters that short-term excursions of the particulate matter standard or operating parameter limits for the purpose of CEMS correlation testing is warranted. The benefits that a CEMS provides for compliance assurance outweighs the short-term emissions exceedances that may occur during high end emissions correlation testing. Consequently, we have included a conditional waiver of the applicability of all Federal particulate matter and opacity standards (and associated operating parameter limits).

The waiver of applicability of the particulate matter and opacity emission standards and associated operating parameter limits is conditioned on the following requirements to ensure that the waiver is not abused. Based on information from commenters and expertise gained during our testing, the rule requires that you develop and submit to permitting officials a particulate matter CEMS correlation test plan along with a statement of when and how any excess emissions will occur during the correlation tests (i.e., how you will modify operating conditions to ensure a wide range of particulate emissions, and thus a valid correlation test). If the permitting officials fail to respond to the test plan in 30 days, you can proceed with the tests as described in the test plan. If the permitting officials comment on the plan, you must address those comments and resubmit the plan for approval.

In addition, runs that exceed any particulate matter or opacity emission standard or operating parameter limit are limited to no more than a total of 96 hours per correlation test (i.e., including all runs of all test conditions). We determined that the 96 hour total duration for exceedances for a correlation test is reasonable because it is comprised of one day to increase emissions to the desired level and reach system equilibrium, two days of testing[214] at the equilibrium condition followed by a return to normal equipment settings indicative of compliance with emissions standards and operating parameter limits, and one

[213] One exception is the destruction and removal efficiency standard, for which compliance is based on a single test run and not the average of three runs.

[214] The two days assumes sources will conduct a total of 18 runs, 6 runs in each of the low, medium, and high particulate matter emission ranges. To approve use of a particulate matter CEMS, we will likely require that a minimum of 15 runs comprise a correlation test. If this is the case, some runs will likely be eliminated because they fail method or source-specific quality assurance/quality control procedures.

day to reach equilibrium at normal conditions. Finally, to ensure these periods of high emissions are due to the *bona fide* need described here, a manual method test crew must be on-site and making measurements (or in the event some unforseen problem develops, prepared to make measurements) at least 24 hours after you make equipment or workplace modifications to increase particulate matter emissions to levels of the high correlation runs.

3. What Is the Status of Total Mercury CEMS?

We are not requiring use of total mercury CEMS in this rulemaking because data in hand do not adequately demonstrate nationally that these CEMS are reliable compliance assurance tools at all types of facilities. Nonetheless, we are committed to the development of CEMS that measure total mercury emissions and are continuing to pursue the development of these CEMS in our research efforts.

In the April 1996 NPRM, we proposed that total mercury CEMS be used for compliance with the mercury standards. We also said if you elect to use a multimetals CEMS that passed proposed acceptability criteria, you could use that CEMS instead of a total mercury CEMS to document compliance with the mercury standard. Finally, we indicated that if neither mercury nor multimetal CEMS were required in the final rule (*i.e.*, because they have not been adequately demonstrated), compliance assurance would be based on specified operating parameter limits.

In the March 1997 NODA, we elicited comment on early aspects of our approach to demonstrate total mercury CEMS. And, in the December 1997 NODA, we presented a summary of the demonstration test results and our preliminary conclusion that we were unable to adequately demonstrate total mercury CEMS at a cement kiln, a site judged to be a reasonable worst-case for performance of the total mercury CEMS. As new data are not available, we continue to adhere to this conclusion, and comments received in response to the December 1997 NODA concur with this conclusion. Therefore, we are not requiring total mercury CEMS in this rulemaking.

Nonetheless, the current lack of data to demonstrate total mercury CEMS at a cement kiln or otherwise on a generic bases (*i.e.*, for all sources within a category) does not mean that the technology, as currently developed, cannot be shown to work at particular sources. Consequently, the final rule provides you the option of using total mercury CEMS in lieu of complying with the operating parameter limits of § 63.1209(l). As for particulate matter and other CEMS, the rule allows you to petition the Administrator (*i.e.*, permitting officials) under § 63.8(f) to use a total mercury CEMS based on documentation that it can meet acceptable performance specifications, correlation acceptance criteria (*i.e.*, correlation coefficient, tolerance level, and confidence level). Although we are not promulgating the proposed performance specification for total mercury CEMS (Performance Specification 12) given that we were not able to document that a mercury CEMS can meet the specification in a (worst-case) cement kiln application, the proposed specification may be useful to you as a point of departure for a performance specification that you may recommend is achievable and reasonable.

4. What Is the Status of the Proposed Performance Specifications for Multimetal, Hydrochloric Acid, and Chlorine Gas CEMS?

We are not promulgating proposed Performance Specifications 10, 13, and 14 for multimetal, hydrochloric acid, and chlorine gas CEMS because we have not determined that the CEMS can achieve the specifications.

In the April 1996 NPRM, we proposed performance specifications for multimetal, hydrochloric acid, and chlorine gas CEMS to allow sources to use these CEMS for compliance with the metals and hydrochloric acid/chlorine gas standards. Given that we have not demonstrated that these CEMS can meet their performance specifications and our experience with a mercury CEMS where we were not able to demonstrate that the mercury CEMS could meet our proposed performance specification, we are not certain that these CEMS can meet the proposed performance specifications. Accordingly, it would be inappropriate to promulgate them.

As discussed previously, we encourage sources to investigate the use of CEMS and to petition permitting officials under § 63.8(f) to obtain approval to use them. The proposed performance specifications may be useful to you as a point of departure in your efforts to document performance specifications that are achievable and that ensure reasonable correlation with reference manual methods.

5. How Have We Addressed Other Issues: Continuous Samplers as CEMS, Averaging Periods for CEMS, and Incentives for Using CEMS?

a. Are Continuous Samplers a CEMS? Several commenters, mostly owner/operators of on-site incinerators, suggest that we should adjust certain CEMS criteria (*e.g.*, averaging period, response time) to allow use of a continuous sampler known as the 3M Method. The 3M Method is a continuous metals sampling system. It automatically extracts stack gas and accumulates a sample on a filter medium over any desired period—24 hours, days, or weeks. The sample is manually extracted, analyzed, and reported. Various incinerator operators are using or have expressed an interest in using this type of approach to demonstrate compliance with current RCRA metals emission limits. Many commenters contend that the 3M Method is a CEMS and that we developed our performance specifications for CEMS to exclude techniques like the 3M Method.

After careful analysis, we conclude that the 3M Method is not a CEMS. It does not meet our long-standing definition of a CEMS in parts 60 or 63. Specifically, it is not a fully automated piece(s) of equipment used to extract a sample, condition and analyze the sample, and report the results of the analysis in the units of the standard. Also, the 3M Method is unable to "complete a minimum of one cycle of operation (sampling, analyzing, and data recording) for each successive 15-minute period" as required by § 63.8(c)(4)(ii). As a result, making the subtle changes (*e.g.*, to the averaging period, response time) to our multimetal CEMS performance specification that commenters recommend would not alter the fact that the device does not automatically analyze the sample on the frequency required for a CEMS.

A continuous sampler (coupled with periodic analysis of the sample) is inferior to a CEMS for two reasons. First, if the sampling period is longer than the time it takes to perform three manual performance tests, compliance with the standard cannot be assured. Approaches like the 3M Method tend to have reporting periods on the order of days, weeks, or even a month. The reporting period is comprised of the time required to accumulate the sample and the additional time to analyze the sample and report results. Because the stringency of a standard is a function of both the numerical value of the standard and the averaging period (*e.g.*, at a given numerical limit, the longer the averaging period the less stringent the standard), a compliance approach having a sampling period greater than the 12 hours we estimate it may take to conduct three manual method stack test runs using Method 29 cannot ensure

compliance with the standard.[215] If the sampling period were greater than the time required to conduct three test runs, the numerical value of the standard would have to be reduced to ensure an equally stringent standard. Unfortunately, we do not know how to derive alternative emission limits as a function of the averaging period that would be equivalent to the emission standard. We raised this issue at proposal, and commenters did not offer a solution.

Second, the results from a continuous sampler are reported after the fact, resulting in higher excess emissions than with a CEMS. Depending on the sample analysis frequency, it could take days or weeks to determine that an exceedance has occurred and that corrective measures need to be taken. A CEMS can provide near real-time information on emissions such that exceedances can be avoided or minimized.

Absent the generic availability of multimetal CEMS, continuous samplers such as the 3M Method may nonetheless be a valuable compliance tool. We have acknowledged that relying on operating parameter limits may be an imperfect approach for compliance assurance. Sampling and analysis of feedstreams to determine metals feedrates can be problematic given the complexities of some waste matrices. In addition, the operating parameters for the particulate matter control device for which limits must be established may not always correlate well with the device's control efficiency for metals and thus metals emissions. Because of these concerns, we encourage sources to investigate the feasibility of multimetal CEMS. But, absent a CEMS, a continuous sampler may provide an attractive alternative or complement to some of the operating parameter limits under §§ 63.1209 (l) and (n). You may petition permitting officials under § 63.8(f) to use the 3M Method (or other sampler) as an alternative method of compliance with the emissions standards. Permitting officials will balance the benefits of a continuous sampler with the benefits of the operating parameter limits on a case-by-case basis.

b. What Are the Averaging Periods for CEMS and How Are They Implemented? We discuss the following issues in this section: (1) Duration of the averaging period; (2) frequency of updating the averaging period; and (3) how averaging periods are calculated initially and under intermittent operations.

i. What Is the Duration of the Averaging Period? We conclude that a six-hour averaging period is most appropriate for particulate matter CEMS, and a 12-hour averaging period is most appropriate for total mercury, multi metals, hydrogen chloride, and chlorine gas CEMS.

We proposed that the averaging period for CEMS (*i.e.*, other than carbon monoxide, hydrocarbon, and oxygen) be equivalent to the time required to conduct three runs of the comprehensive performance test using manual stack methods. As discussed above and at proposal, we proposed this approach because, to ensure compliance with the standard, the CEMS averaging period must be the same as the time required to conduct the performance test.[216]

Commenters suggest two general approaches to establish averaging periods for CEMS: technology-based and risk-based. Commenters supporting a technology-based approach favor our proposed approach and rationale where the time duration of three emissions tests would be the averaging period for CEMS. Commenters favoring a risk-based approach state that the averaging period should be years rather than hours because the risk posed by emissions at levels of the standard were not found to be substantial, assuming years of exposure. We disagree with this rationale. CEMS are an option (that sources may request under § 63.8(f)) to document compliance with the emission standard. As discussed above, if the averaging period for CEMS were longer than the duration of the comprehensive performance test, we could not ensure that a source maintains compliance with the standards.

Establishing an averaging period based on the time to conduct three manual method stack test runs is somewhat subjective. There is no fixed sampling time for manual methods—sampling periods vary depending on the amount of time required to "catch" enough sample. Thus, we have some discretion in selecting an averaging period using this approach. Commenters generally favor longer averaging periods as an incentive for using CEMS (i.e., because a limit is less stringent if compliance is based on a long versus short averaging period). We agree that choosing a longer averaging period would provide an incentive for the use of CEMS, but conclude that the selected averaging period must be within the range (i.e., high end) of times required to perform the three stack test runs.

We derive the averaging period for particulate matter CEMS as follows. Most particulate matter manual method tests are one hour in duration, but a few stack sampling companies sample for longer periods, up to two hours. Therefore, we use the high end of the range of values, 2 hours, as the basis for calculating the averaging period. We recommend a six-hour rolling average considering that it may require 2 hours to conduct each of three stack tests.

For mercury, multi-metals, hydrochloric acid, and chlorine gas CEMS, we recommend a 12-hour rolling averaging. The data base we used to determine the standards shows that the sampling periods for manual method tests for these standards ranged from one to four hours. Choosing the high end of the range of values, 4 hours, as the basis for calculating the averaging period, we conclude that a 12-hour rolling average would be appropriate.

ii. How Frequently Is the Rolling Average Updated? We conclude that the rolling average for particulate matter, total mercury, and multimetal CEMS should be updated hourly, while the rolling average for hydrochloric acid and chlorine gas CEMS should be updated each minute.

We proposed that all rolling averages would be updated every minute and would be based on the average of the one-minute block average CEMS observations that occurred over the averaging period. This proposed one-minute update is the same that is used for carbon monoxide and total hydrocarbon CEMS under the RCRA BIF regulations. (We are retaining that update frequency in the final rule for those monitors, and recommend it for hydrochloric acid and chlorine gas CEMS.)

Commenters favor selecting the frequency of updating the rolling average taking into account the variability of the CEMS and limitations concerning how the correlation data are collected. We agree with this approach, as discussed below.

1. Particulate Matter CEMS. Commenters said that particulate matter CEMS correlation tests are approximately one hour in duration and, if the rolling average were updated

[215] A technical support document for the February 1991 municipal waste combustor rule contains a good description of how not only the numerical limit, but the averaging period as well, determines the overall stringency of the standard. See Appendices A and B found in "Municipal Waste Combustion: Background Information for Promulgated Standards and Guidelines—Summary of Public Comments and Responses Appendices A to C". EPA-450/3-91-004, December 1990.

[216] Actually, the CEMS averaging period can be no longer than the time required to conduct three runs of the performance test to ensure compliance with the standard. Although compliance with the standard would be ensured if the CEMS averaging period were less than the time required to conduct the performance test, this approach would be overly stringent because it would ensure compliance with an emission level lower than the standard.

each minute, the CEMS would observe more variability in emissions within this one hour than the manual method (which is an average of those emissions during the hour). For this reason, we conclude it is reasonable that particulate matter CEMS data be recorded as a block-hour and that the rolling average be updated every hour as the average of the previous six block-hours. Updating the particulate matter CEMS every hour also means the number of compliance opportunities is the same irrespective of whether a light-scattering or beta-gage particulate matter CEMS is used (i.e., because beta-gage CEMS make observations periodically while light-scattering CEMS make observations continuously).

Furthermore, to ensure consistency with existing air rules governing CEMS other than opacity, a valid hour should be comprised of four or more equally spaced measurements during the hour. See § 60.13(h). This means that batch systems, such as beta gages, must complete one cycle of operation every 15 minutes, or more frequently if possible. See § 63.8(c)(4)(ii). CEMS that produce a continuous stream of data, such as light-scattering CEMS, will produce data throughout the hour.

You may not be able to have four valid 15-minute measurement in an hour, however, to calculate an hourly block-average. Examples include when the source shuts down or the CEMS produces flagged (i.e., problematic) data. In addressing this issue, we balanced the need for the average of the measurements taken during the hour to be representative of emissions during the hour with the need to accommodate problems with data availability that will develop. We conclude that a particulate matter CEMS needs to sample stack gas and produce a valid result from this sample for most of the hour. This means that the CEMS needs to be observing stack gas at least half (30 minutes, or two 15-minute cycles of operation) of the block-hour. Emissions from less than one hour might be unrepresentative of emissions during the hour, and on balance we conclude that this approach is reasonable. If a particulate matter CEMS does not sample stack gas and produce a valid result from that sample for at least 30 minutes of a given hour, the hour is not a valid block-hour. In documenting compliance with the data availability recommendation in the draft performance specification, invalid block-hours due to unavailability of the CEMS that occur when the source is in operation count against data availability. If the hour is not valid because the source was not operating for more than 30 minutes of the hour, however, the invalid block-hour does not count against the data availability recommendation.[217]

2. Total Mercury and Multimetal CEMS. As discussed for particulate matter CEMS, we also expect manual methods will be required to correlate total mercury and multimetal CEMS prior to using them for compliance. For the reasons discussed above in the context of particulate matter CEMS, we therefore recommend the observations from these CEMS be recorded as block-hour averages and that the 12-hour rolling average be updated every hour based on the average of the previous 12 block-hour averages.

3. Hydrochloric Acid and Chlorine Gas CEMS. Unlike the particulate matter, total mercury, and multimetal CEMS, hydrochloric acid and chlorine gas CEMS are likely to be calibrated using Protocol 1 gas bottles rather than correlated to manual method stack test results. Therefore, the variability of observations measured by the CEMS over some averaging period versus the duration of a stack test is not an issue. We conclude that it is appropriate to update the 12-hour rolling average for these CEMS every minute, as required for carbon monoxide and hydrocarbons CEMS.

iii. How Are Averaging Periods Calculated Initially and under Intermittent Operations?

1. Practical Effective Date of Rolling Averages for CEMS. As discussed in Part Five, Sections VII.B.4 above in the context of continuous monitoring systems in general, CEMS recordings will not become effective for compliance monitoring on the compliance date until you have recorded enough observations to calculate the rolling average applicable to the CEMS. For example, the six hourly rolling average for particulate matter CEMS does not become effective until you have recorded six block-hours of observations on the compliance date. Given that compliance with the standards begins nominally at 12:01 am on the compliance date, the six hour rolling average for particulate matter CEMS does not become effective as a practical matter until 6:01 am on the compliance date. Similarly, the 12-hour rolling average for a multimetal CEMS does not become effective until you have recorded 12 block-hours of observations after the compliance date. Thus, the 12-hour rolling average for multimetals CEMS becomes effective as a practical matter at 12:01 p.m. on the compliance date.

We adopt this approach simply because a rolling average does not exist until enough observations have been recorded to calculate the rolling average.

2. How Rolling Averages Are Calculated Upon Intermittent Operations. We have determined that you are to ignore periods of time when CEMS observations are not recorded for any reason (*e.g.*, source shutdown) when calculating rolling averages. For example, consider how the six hour rolling average for a particulate matter CEMS would be calculated if a source shuts down for yearly maintenance for a three week period. The first one-hour block average value recorded when the source renews operations is added to the last 5 one-hour block averages recorded before the source shut down for maintenance to calculate the six hour rolling average.

We adopt this approach for all continuous monitoring systems, including CEMS, because it is simple and reasonable. See discussion in Part Five, Section B.4 above.

c. What Are the Incentives for Using CEMS as Alternative Monitoring? We strongly support the use of CEMS for compliance with standards, even though we are not requiring their use in today's rule (except for carbon monoxide, hydrocarbon, and oxygen CEMS) for the reasons discussed above. We endorse the principle that, as technology advances, current rules should not act as an obstacle to adopting new CEMS technologies for compliance. For instance, today's rule does not require total mercury CEMS because implementation and demonstration obstacles observed during our tests under what we consider worst-case conditions (*i.e.*, a cement kiln) could not be resolved in sufficient time to require total mercury CEMS at all hazardous waste combustors. However, we fully expect total mercury CEMS will improve to the point that the technical issues encountered in our tests can be resolved. At that point, we do not want the compliance regime of today's rule—comprised of emissions testing and limits on operating parameters—to be so rigid as to preclude the use of CEMS. Commenters are generally supportive of this concept, but note that facilities would be reluctant to adopt new technologies without adequate incentives. This section describes potential incentives: emissions testing would not be required; limits on operating parameters would not apply while the CEMS is in service; and the feedstream analysis requirements for the

[217] Data availability is defined as the fraction, expressed as a percentage, of the number of block-hours the CEMS is operational and obtaining valid data during facility operations, divided by the number of block-hours the facility was operating.

parameters measured by the CEMS (*i.e.*, metals or chlorine) would not apply.

i. What Incentives Do Commenters Suggest? Several commenters suggest that we provide various incentives to encourage development and implementation of new and emerging CEMS. Comments by the Coalition for Responsible Waste Incineration (CRWI) include a variety of actions to encourage voluntary installation of CEMS,[218] including: Reduce testing for any parameter measured by a CEMS to the correlation and maintenance of that CEMS; waive operating parameter limits that are linked to the pollutant measured by the CEMS; minimize regulatory oversight on waste analysis if compliance is consistently demonstrated by a CEMS; increase the emission limit for a source using a CEMS to account for the uncertainty of CEMS observations; allow a phase-in period when a source can evaluate CEMS performance and develop maintenance practices and the CEMS would not be used for compliance; allow a phase-in period to establish a reasonable availability requirement for that CEMS at a particular location; and allow sources to evaluate CEMS on a trial basis to determine if these instruments are appropriate for their operations with no penalties if the units do not work or have excessive downtime. Many of CRWI's suggestions have merit, as discussed below.

ii. How Do We Respond to Commenter's Recommended Incentives?

1. Waiver of Emissions Testing and Operating Parameter Limits. CRWI's first two suggestions (reduced testing and waiver of operating parameter limits) are closely linked. The purpose of conducting a comprehensive performance test is to document compliance with emission standard initially (and periodically thereafter) and establish limits on specified operating parameters to ensure that compliance is maintained. Because a CEMS ensures compliance continuously, it serves the purpose of both the performance test and compliance with operating parameter limits. Accordingly, we agree with CRWI that both emissions testing and operating parameter limits for the pollutant in question would not apply to sources using a CEMS.

There is one key caveat to this position, however. Because 100% availability of any CEMS is unrealistic, we require a means of assuring compliance with the emission standards during periods when the CEMS is not available. To meet that need, you may elect to install redundant CEMS or assure continuous compliance by monitoring and recording traditional operating parameter limits during periods when the CEMS is not available. Most likely, you will elect to use operating parameters as the back-up when the CEMS is unavailable because it would be a less expensive approach. You could establish these operating parameter limits, though, through CEMS measurements rather than comprehensive performance test measures. In fact, it may be prudent for you to evaluate relationships between various operating parameters for the particulate matter control device[219] and emission levels recorded by the CEMS to develop a good predictive model of emissions. You could then petition the Administrator (*i.e.*, permitting officials) under § 63.8(f) to base compliance during CEMS malfunctions on limits on alternative monitoring parameters derived from the predictive model.

2. Waiver of Feedstream Analysis Requirements. If you obtain approval to use a CEMS for compliance under the petitioning provisions of § 63.8(f), we agree with the commenter's recommendation that you should not be subject to the feedstream analysis requirements pertinent to the pollutant you are measuring with a CEMS. As examples, if you use a total mercury CEMS, you are not subject to a feedrate limit for mercury, and if you operate an incinerator and use a particulate matter CEMS, you are not subject to a feedrate limit for total ash.

If you are not subject to a feedrate limit for ash, metals, or chorine because you use a CEMS for compliance, you are not subject to the feedstream analysis requirements for these materials. As a practical matter, however, this waiver may be moot because, as discussed above, you will probably elect to comply with operating parameter limits during CEMS malfunctions. However, a second, back-up CEMS would also be acceptable. Absent a second CEMS, you would need to establish feedrate limits for these materials as a back-up compliance approach, and you would need to know the feedrate at any time given that the CEMS may malfunction at any time. In addition, even when the CEMS is operating within the performance specifications approved by the permitting officials, you have the responsibility to minimize exceedances by, for example, characterizing your feedstreams adequately to enable you to take corrective measures if a CEMS-monitored emission is approaching the standard. This level of feedstream characterization, however, is less than the characterization required to establish and comply with feedrate operating limits during CEMS malfunctions or absent a CEMS.

3. Increase the Averaging Period for CEMS-Monitored Pollutants. The averaging period for a CEMS-monitored pollutant should not be artificially inflated (*i.e.*, increased beyond the time required to conduct three manual method test runs) because the standard would be less stringent. See previous discussions on this issue.

4. Increase Emission Limits to Account for CEMS Uncertainty. We do not agree with the suggestion that an emission limit needs to be increased on a site-specific basis to accommodate CEMS inaccuracy and imprecision (*i.e.*, the acceptance criteria in the CEMS performance specification that the source recommends and the permitting officials approve will necessarily allow some inaccuracy and imprecision). Again, we encourage sources to use a CEMS because it is a better indicator of compliance than the promulgated compliance regime (*i.e.*, periodic emissions testing and operating parameter limits). We established the final emission standards with achievability (through the use of the prescribed compliance methods) in mind. We have accounted for the inaccuracies and imprecisions in the emissions data in the process of establishing the standard. See previous discussions in Part Four, Section V.D. If the CEMS performance specification acceptance criteria (that must be approved by permitting officials under a § 63.8(f) petition) were to allow the CEMS measurements to be more inaccurate or imprecise than the promulgated compliance regime of performance testing coupled with limits on operating parameters, the potential for improved compliance assurance with the CEMS would be negated. Consequently, we reject the idea that the standards need to be increased on a site-specific basis as an incentive for sources to use CEMS.

5. Allow a CEMS Phase-In Period. CRWI's final three incentive suggestions deal with the need for a CEMS phase-in period. This phase-in period would be used to evaluate CEMS performance, including identifying acceptable performance specification levels, maintenance requirements, and measurement location. CRWI further suggested that the Agency not penalize

[218] By "optional use of CEMS", we mean using CEM not required by this rule, *i.e.*, other than those for carbon monoxide, oxygen, and hydrocarbon.

[219] You are not restricted to those specified in § 63.1209. You may identify parameters for your source that correlate better with particulate emissions than those we have specified generically.

a source if the CEMS does not work or has excessive downtime.

CRWI provided these comments in response to our proposal to require compliance using CEMS and that sources document that the CEMS meets a prescribed performance specification and correlation acceptance criteria. Although we agree that a phase-in period would be appropriate, the issue is moot given that we are not requiring the use of CEMS.[220] Prior to submitting a petition under § 63.8(f) to gain approval to use a CEMS, we presume a source will identify the performance specification, correlation criteria, and availability factors they believe are achievable. (We expect sources to use the criteria we have proposed, as revised after considering comments and further analysis and provided through guidance, as a point of departure.) Thus, each source will have unlimited opportunity to phase-in CEMS and subsequently recommend under § 63.8(f) performance specifications and correlation acceptance criteria.

We do not agree as a legal matter that we can state generically that CEMS data obtained during the demonstration period are shielded from enforcement if the CEMS data are credible and were to indicate exceedance of an emission standard. In this situation, we cannot shield a source from action by either by a regulatory agency or a citizen suit. On balance, given our legal constraints, our policy desire to have CEMS used for compliance, and uncertainty about the ultimate accuracy of the CEMS data, we can use our enforcement discretion whether to use particulate matter CEMS data as credible evidence in the event the CEMS indicates an exceedance until the time the CEMS is formally adopted as a compliance tool. Sources and regulators may decide to draft a formal testing agreement that states that the CEMS data obtained prior to the time the CEMS is accepted as a compliance tool cannot be used as credible evidence of exceedance of an emission standard.

D. What Are the Compliance Monitoring Requirements?

In this section we discuss the operating parameter limits that ensure compliance with each emission standard.

1. What Are the Operating Parameter Limits for Dioxin/Furan?

You must maintain compliance with the dioxin/furan emission standard by establishing and complying with limits on operating parameters. See § 63.1209(k). The following table summarizes these operating parameter limits. All sources must comply with the operating parameter limits applicable to good combustion practices. Other operating parameter limits apply if you use the dioxin/furan control technique to which they apply.

BILLING CODE 6560–50–P

[220] Other than carbon monoxide, hydrocarbon, and oxygen CEMS.

Summary of Dioxin/Furan Monitoring Requirements

Control Technique	Compliance Using	Limits From	Averaging Period	How Limit Is Established
Combustion Gas Temperature Quench	Continuous monitoring system (CMS) for maximum temperature at the inlet to the dry particulate matter control device, except lightweight aggregate kilns must monitor gas temperature at the kiln exit	Comprehensive performance test	1-hour	Avg of the test run averages
Good Combustion Practices	CMS for maximum waste feedrates for pumpable and total wastes for each feed system	Comprehensive performance test	1-hour	Avg of the maximum hourly rolling averages for each run
	CMS for minimum gas temperature for each combustion chamber	Comprehensive performance test	1-hour	Avg of the test run averages
	CMS for maximum gas flowrate or kiln production rate	Comprehensive performance test	1-hour	Avg of the maximum hourly rolling averages for each run
	Monitoring of parameters recommended by the source to maintain operation of each hazardous waste firing system[1]	Based on source recommendation	To be determined case-by-case	To be determined case-by-case
Activated Carbon Injection[2]	Good particulate matter control: Monitoring requirements are the same as required for compliance assurance with the particulate matter standard. See Section VII.D.6 below.			
	CMS for minimum carbon feedrate	Comprehensive performance test	1-hour	Avg of the test run averages
	CMS for minimum carrier fluid flowrate or nozzle pressure drop	Manufacturer specifications	1-hour	n/a
	Identification of carbon brand and type or adsorption properties	Comprehensive performance test	n/a	Same properties based on manufacturer's specifications
Activated Carbon Bed[2]	Good particulate matter control: Monitoring requirements are the same as required for compliance assurance with the particulate matter standard. See Section VII.D.6 below.			
	Determination of maximum age of each carbon bed segment	Comprehensive performance test[3]	n/a	Maximum age of each segment during testing[3]
	Identification of carbon brand and type or adsorption properties	Comprehensive performance test	n/a	Same properties based on manufacturer's specifications

	CMS for maximum gas temperature at the inlet or exit of the bed	Comprehensive performance test	1-hour	Avg of the test run averages
Catalytic Oxidizer[2]	CMS for minimum gas temperature at inlet to catalyst	Comprehensive performance test	1-hour	Avg of the test run averages
	Identification of maximum catalyst time in-use	Manufacturer specifications	as specified	
	Identification of catalytic metal loading	Comprehensive performance test	n/a	Same as used during comprehensive test
	Identification of maximum space-time for the catalyst			
	Identification of substrate construct: materials, pore size			
	CMS for maximum flue gas temperature at inlet to catalyst	Manufacturer specifications	1-hour	As specified
Dioxin/Furan Formation Inhibitor[3]	CMS for minimum inhibitor feedrate	Comprehensive performance test	1-hour	Avg of the test run averages
	Identification of inhibitor brand and type or inhibitor properties	Comprehensive performance test	n/a	Same properties based on manufacturer's specifications

[1] You must recommend operating parameters, monitoring approaches, and limits in the comprehensive performance test plan to maintain operation of each hazardous waste firing system.

[2] A CMS for gas flowrate or kiln production rate is also required with the same provisions as required for those parameters under the Good Combustion Practices control technique.

[3] Maximum carbon age limits for the compliance period after the initial comprehensive performance test may be based on manufacturer specifications. See discussion in part d.2 of this section.

BILLING CODE 6560-50-C

Dioxin/furan emissions from hazardous waste combustors are primarily attributable to surface-catalyzed formation reactions downstream from the combustion chamber when gas temperatures are in the 450 °F to 650 °F window (*e.g.*, in an electrostatic precipitator or fabric filter; in extensive ductwork between the exit of a lightweight aggregate kiln and the inlet to the fabric filter; as combustion gas passes through an incinerator waste heat recovery boiler). In addition, dioxin/furan partition in two phases in stack emissions: a portion is adsorbed onto particulate matter and a portion is emitted as a vapor (gas). Because of these factors, and absent a CEMS for dioxin/furan, we are requiring a combination of approaches to control dioxin/furan emissions: (1) Temperature control at the inlet to a dry particulate matter control device to limit dioxin/furan formation in the control device; (2) operation under good combustion conditions to minimize dioxin/furan precursors and dioxin/furan formation during combustion; and (3) compliance with operating parameter limits on dioxin/furan emission control equipment (*e.g.*, carbon injection) that you may elect to use.

We discuss below the operating parameter limits that apply to each dioxin/furan control technique.

a. Combustion Gas Temperature Quench. To minimize dioxin/furan formation in a dry particulate matter control device that suspends collected particulate matter in the gas flow (e.g., electrostatic precipitator, fabric filter), the rule limits the gas temperature at the inlet to these control devices [221] to levels occurring during the comprehensive performance test. For lightweight aggregate kilns, however, you must monitor the gas temperature at the kiln exit rather than at the inlet to the particulate matter control device. This is because the dioxin/furan emission standard for lightweight aggregate kilns specifies rapid quench of combustion gas to 400 °F or less at the kiln exit. [222]

If your combustor is equipped with a wet scrubber as the initial particulate matter control device, you are not required to establish limits on combustion gas temperature at the scrubber. This is because wet scrubbers do not suspend collected particulate matter in the gas stream and gas temperatures are well below 400 °F in the scrubber.[223] Thus, scrubbers do not enhance surface-catalyzed formation reactions.

We proposed limits on the gas temperature at the inlet to a dry particulate matter control device (see 61 FR at 17424). Temperature control at this location is important because surface-catalyzed formation reactions can increase by a factor of 10 for every 150 °F increase in temperature within the window of 350 °F to approximately 700 °F. We received no adverse comments on the proposal, and thus, are adopting this compliance requirement in the final rule.

You must establish an hourly rolling average temperature limit based on operations during the comprehensive performance test. The hourly rolling average limit is established as the average of the test run averages. See Part Five, Sections VII.B.1 and B.3 above for a discussion on the approach for calculating limits from comprehensive performance test data.

b. Good Combustion Practices. All hazardous waste combustors must use good combustion practices to control dioxin/furan emissions by: (1) Destroying dioxin/furan that may be present in feedstreams; (2) minimizing formation of dioxin/furan during combustion; and (3) minimizing dioxin/furan precursor that could enhance post-combustion formation reactions. As proposed, you must establish and continuously monitor limits on three key operating parameters that affect good combustion: (1) Maximum hazardous waste feedrate; (2) minimum temperature at the exit of each combustion chamber; and (3) residence time in the combustion chamber as indicated by gas flowrate or kiln production rate. We have also determined that you must establish appropriate monitoring requirements to ensure that the operation of each hazardous waste firing system is maintained. We discuss each of these parameters below.

i. Maximum Hazardous Waste Feedrate. You must establish and continuously monitor a maximum hazardous waste feedrate limit for pumpable and nonpumpable wastes. See 61 FR at 17422. An increase in waste feedrate without a corresponding increase in combustion air can cause inefficient combustion that may produce (or incompletely destroy) dioxin/furan precursors. You must also establish hazardous waste feedrate limits for each location where waste is fed.

One commenter suggests that there is no reason to limit the feedrate of each feedstream; a limit on the total hazardous waste feedrate to each combustion chamber would be a more appropriate control parameter. We concur in part. Limits are not established for each feedstream. Rather, limits apply to total and pumpable wastes feedrates for each feed location. Limits on pumpable wastes are needed because the physical form of the waste can affect the rate of oxygen demand and thus combustion efficiency. Pumpable wastes often will expose a greater surface area per mass of waste than nonpumpable wastes, thus creating a more rapid oxygen demand. If that demand is not satisfied, inefficient combustion will occur. We also note that these waste feedrate limit requirements are consistent with current RCRA permitting requirements for hazardous waste combustors.

As proposed, you must establish hourly rolling average limits for hazardous waste feedrate from comprehensive performance test data as the average of the highest hourly rolling averages for each run. See Part Five, Section VII.B.3 above for the rationale for this approach for calculating limits from comprehensive performance test data.

ii. Minimum Gas Temperature in the Combustion Zone. You must establish and continuously monitor limits on minimum gas temperature in the combustion zone of each combustion chamber irrespective of whether hazardous waste is fed into the chamber. See 61 FR at 17422. These limits are needed because, as combustion zone temperatures decrease, combustion efficiency can decrease resulting in increased formation of (or incomplete destruction of) dioxin/furan precursors.[224]

Monitoring combustion zone temperatures can be problematic, however, because the actual burning zone temperature cannot be measured at many units (e.g., cement kilns). For this reason, the BIF rule requires

[221] The temperature at the inlet to a cyclone separator used as a prefiltering process for removing larger particles is not limited. Cyclones do not suspend collected particulate matter in the gas stream. Thus, these devices do not have the same potential to enhance dioxin/furan formation as electrostatic precipitators and fabric filters.

[222] As discussed in Part Four, Section VIII, lightweight aggregate kilns can have extensive ducting between the kiln exit and the inlet to the fabric filter. If gas temperatures are limited at the inlet to the fabric filter, substantial dioxin/furan formation could occur in the ducting.

[223] For this reason, you are not required to document during the comprehensive performance test that gas temperatures in the wet scrubber are not greater than 400 °F. Also, we note that the 400 °F temperature limit of the dioxin/furan standard does not apply to wet scrubbers, but rather to the inlet to a dry particulate matter control device and the kiln exit of a lightweight aggregate kiln.

[224] See USEPA, "Final Technical Support Document for Hazardous Waste Combustor MACT Standards, Volume IV: Compliance with the Hazardous Waste Combustor Standards", February, 1999.

measurement of the "combustion chamber temperature where the temperature measurement is as close to the combustion zone as possible." See § 266.103(c)(1)(vii). In some cases, temperature is measured at a location quite removed from the combustion zone due to extreme temperatures and the harsh conditions at the combustion zone. We discussed this issue at proposal and indicated that we were concerned that monitoring at such remote locations may not accurately reflect changes in combustion zone temperatures. See 61 FR at 17423.

We requested comment on possible options to address the issue. Under one option, the final rule would have allowed the source to identify a parameter that correlates with combustion zone temperature and to provide data or information to support the use of that parameter in the operating record. Under another option, the final rule would have enabled regulatory officials on a case-specific basis to require the use of alternate parameters as deemed appropriate, or to determine that there is no practicable approach to ensure that minimum combustion chamber temperature is maintained (and what the recourse/consequence would be).

Some commenters recommend the status quo as identified by the BIF rule requirements for monitoring combustion zone temperature. These commenters suggest that more prescriptive requirements would not be implementable for cement kilns because use of the temperature measurement instrumentation would simply not be practicable under combustion zone conditions in a cement kiln. We agree that combustion zone temperature monitoring for certain types of sources requires some site-specific considerations (as evidenced in our second proposed option discussed above), and conclude that more specific language than that used in the BIF rule to address this issue would not be appropriate. Accordingly, we adopt language similar to the BIF rule in today's final rule. You must measure the temperature of each combustion chamber at a location that best represents, as practicable, the bulk gas temperature in the combustion zone of that chamber. You are required to identify the temperature measurement location and method in the comprehensive performance test plan, which is subject to Agency approval.

The temperature limit(s) apply to each combustion zone, as proposed. See 61 FR at 17423. For incinerators with a primary and secondary chamber, you must establish separate limits for the combustion zone in each chamber.[225] For kilns, you must establish separate temperature limits at each location where hazardous waste may be fired (e.g., the hot end where clinker is discharged; and the upper end of the kiln where raw material is fed). We also proposed to include temperature limits for hazardous waste fired at the midkiln. One commenter indicates that it is technically infeasible to measure temperature directly at the midkiln waste feeding location, however. We agree that midkiln gas temperature is difficult to measure due to the rotation of the kiln.[226] Thus, the final rule allows temperature measurement at the kiln back-end as a surrogate.

You must establish an hourly rolling average temperature limit based on operations during the comprehensive performance test. The hourly rolling average limit is established as the average of the test run averages. See Part Five, Sections VII.B.1 and B.3 above for a discussion on the approach for calculating limits from comprehensive performance test data.

iii. Maximum Flue Gas Rate or Kiln Production Rate. As proposed, you must establish and continuously monitor a limit on maximum flue gas flowrate or, as a surrogate, kiln production rate. See 61 FR at 17423. Flue gas flowrates in excess of those that occur during comprehensive performance testing reduce the time that combustion gases are exposed to combustion chamber temperatures. Thus, combustion efficiency can decrease potentially causing an increase in dioxin/furan precursors and, ultimately, dioxin/furan emissions.[227]

For cement kilns and lightweight aggregate kilns, the rule allows the use of production rate as a surrogate for flue gas flowrate. This is the approach currently used for the BIF rule for these devices, given that flue gas flowrate correlates with production rate (e.g., feedrate of raw materials or rate of production of clinker or aggregate).

At proposal, however, we expressed concern that production rate may not relate well to flue gas flowrate in situations where the moisture content of the feed to the combustor changes dramatically. See 61 FR at 17423. Some commenters concur and also express concern that production rate is not a reliable surrogate for flue gas flowrate because changes in ambient temperature can cause increased heat rates and changes in operating conditions can result in variability in excess air rates. Based on an analysis of kiln processes, however, we conclude that these issues should not be a concern. With respect to changes in moisture content of the feed, kilns tend to have a steady and homogeneous waste and raw material processing system. Thus, the feed moisture content does not fluctuate widely, and variation in moisture content of the stack does not significantly affect gas flowrate.[228] Thus, production rate should be an adequate surrogate for gas flowrate for our purposes here.

You must establish a maximum gas flowrate or production rate limit as the average of the maximum hourly rolling averages for each run of the comprehensive performance test. See Part Five, Sections VII.B.3 above for the rationale for the approach for calculating limits from comprehensive performance test data.

iv. Operation of Each Hazardous Waste Firing System. You must recommend in the comprehensive performance test plan that you submit for review and approval operating parameters, limits, and monitoring approaches to ensure that each hazardous waste firing system continues to operate as efficiently as demonstrated during the comprehensive performance test.

It is important to maintain operation of the hazardous waste firing system at levels of the performance test to ensure that the same or greater surface area of the waste is exposed to combustion conditions (e.g., temperature and oxygen). Oxidation takes place more quickly and completely as the surface area per unit of mass of the waste increases. If the firing system were to degrade over time such that smaller surface area is exposed to combustion conditions, inefficient combustion could result leading potentially to an increase in dioxin/furan precursors.

[225] The temperature limits apply to a combustion chamber even if hazardous waste is not burned in the chamber for two reasons. First, an incinerator may rely on an afterburner that is fired with a fuel other than hazardous waste to ensure good combustion of organic compounds volatilized from hazardous waste in the primary chamber. Second, MACT controls apply to total emissions (except where the rule makes specific provisions), irrespective of whether they derive from burning hazardous waste or other material, or from raw materials.

[226] See USEPA, "Final Technical Support Document for Hazardous Waste Combustor MACT Standards, Volume IV: Compliance with the Hazardous Waste Combustor Standards", February, 1999, for further discussion.

[227] We note that an increase in gas flowrate can also adversely affect the performance of a dioxin/furan emission control device (e.g., carbon injection, catalytic oxidizer). Thus, gas flowrate is controlled for this reason as well.

[228] See USEPA, "Final TSD for hazardous Waste Combustor MACT Standards, Volume IV: Compliance with the Hazardous Waste Combustor Standards", February, 1999 for further discussion.

At proposal, we discussed establishing operating parameter limits only for minimum nozzle pressure and maximum viscosity of wastes fired using a liquid waste injection system. In developing the final rule, however, we determined that RCRA permit writers currently establish operating parameter limits on each waste firing system to ensure compliance with the RCRA destruction and removal efficiency (DRE) standard. We are continuing the DRE requirement as a MACT standard, and as discussed in Section VII.D.7 below, the DRE operating parameter limits are identical to those required to maintain good combustion practices for compliance with the dioxin/furan standard. This is because compliance with the DRE standard is ensured by maintaining good combustion practices. Consequently, we include a requirement to establish limits on operating parameters for each waste or fuel firing system as a measure of good combustion practices for the dioxin/furan standard as well to be technically correct and for purposes of completeness.[229] Because this requirement is identical to an existing RCRA requirement, it will not impose an incremental burden.

The rule does not prescribe generic operating parameters and how to identify limits because, given the variety of firing systems and waste and fuel properties, they are better defined on a site-specific basis. Examples of monitoring parameters for a liquid waste firing system would be, as proposed, minimum nozzle pressure established as an hourly rolling average based on the average of the minimum hourly rolling averages for each run, coupled with a limit on maximum waste viscosity. The viscosity limit could be monitored periodically based on sampling and analysis. Examples of monitoring parameters for a lance firing system for sludges could be minimum pressure established as discussed above, plus a limit on the solids content of the waste.

v. Consideration of Restrictions on Batch Size, Feeding Frequency, and Minimum Oxygen Concentration. We proposed site-specific limits on maximum batch size, batch feeding frequency, and minimum combustion gas oxygen concentration as additional compliance requirements to ensure good combustion practices. See 61 FR at 17423. After carefully considering all comments, and for the reasons discussed below, we conclude that the carbon monoxide and hydrocarbon emission standards assure use of good combustion practices during batch feed operations. This is because the carbon monoxide and hydrocarbon CEMS are reliable and continuous indicators of combustion efficiency. In situations where batch feed operating requirements may be needed to better assure good combustion practices, however, we rely on the permit writer's discretionary authority under § 63.1209(g)(2) to impose additional operating parameter limits on a site-specific basis.

Many hazardous waste combustors burn waste fuel in batches, such as metal drums or plastic containers. Some containerized waste can volatilize rapidly, causing a momentary oxygen-deficient condition that can result in an increase in emissions of carbon monoxide, hydrocarbon, and dioxin/furan precursors. We proposed to limit batch size, batch feeding frequency, and minimum combustion gas oxygen concentration to address this concern.

Commenters suggest that the proposed batch feed requirements (that would limit operations to the smallest batch, the longest time interval, and the maximum oxygen concentration demonstrated during the comprehensive performance test) would result in extremely conservative limits that would severely limit a source's ability to batch-feed waste. Given these concerns and our reanalysis of the need for these limits, we conclude that the carbon monoxide and hydrocarbon emission standards will effectively ensure good combustion practices for most batch feed operations. Consequently, the final rule does not require limits for batch feed operating parameters.

Carbon monoxide or hydrocarbon monitoring may not be adequate for all batch feed operations, however, to ensure good combustion practices are maintained. We anticipate that permitting officials will determine on a site-specific basis, typically during review of the initial comprehensive performance test plan, whether limits on one or more batch feed operating parameters need to be established to ensure good combustion practices are maintained. This review should consider your previous compliance history (e.g., frequency of automatic waste feed cutoffs attributable to batch feed operations that resulted in an exceedance of an operating limit or standard under RCRA regulations prior to the compliance date), together with the design and operating features of the combustor. Providing permitting officials the authority under § 63.1209(g)(2) to establish batch feed operating parameter limits only where warranted precludes the need to impose the limits on all sources.

Permitting officials may also determine that limits on batch feed operating parameters are needed for a particular source based on the frequency of automatic waste feed cutoffs after the MACT compliance date. Permitting officials would consider cutoffs that are attributable to batch feed operations and that result in an exceedance of an operating parameter limit or the carbon monoxide or hydrocarbon emission standard. Given that you must notify permitting officials if you have 10 or more automatic waste feed cutoffs in a 60-day period that result in an exceedance of an operating parameter limit or CEMS-monitored emission standard, permitting officials should take the opportunity to determine if batch feed operations contributed to the frequency of exceedances. If so, permitting officials should use the authority under § 63.1209(g)(2) to establish batch feed operating parameter limits.

Although we are not finalizing batch feed operating parameter limits, we anticipate that permitting officials will require you (during review and approval of the test plan) to simulate worst-case batch feed operating conditions during the comprehensive performance test when demonstrating compliance with the dioxin/furan and destruction and removal efficiency standards. It would be inappropriate for you to operate your batch feed system during the comprehensive performance test in a manner that is not considered worst-case, considering the types and quantities of wastes you may burn, and the range of values you may encounter during operations for batch feed-related operating parameters (e.g., oxygen levels, batch size and/or btu content, waste volatility, batch feeding frequency).

To ensure that the CEMS-monitored carbon monoxide and hydrocarbon emission standards ensure good combustion practices for batch feed operations, the final rule includes special requirements to ensure that "out-of-span" carbon monoxide and hydrocarbon CEMS readings are adequately accounted for. We proposed batch feed operating parameter limits in part because of concern that the carbon monoxide and hydrocarbon CEMS may not accurately calculate hourly rolling averages when you encounter emission concentrations that exceed the span of the CEMS. This is an important

[229] Because incomplete combustion of fuels (e.g., oil, coal, tires) could contribute to increased dioxin/furan emissions by producing dioxin/furan precursors, permitting official may require (during review and approval of the comprehensive performance test plan) that you establish limits on operating parameters for firing systems in addition to those firing hazardous waste.

consideration because batch feed operations have the potential to generate large carbon monoxide or hydrocarbon spikes—large enough at times to exceed the span of the detector. When this occurs, the CEMS in effect "pegs out" and the analyzer may only record data at the upper end of its span, while in fact carbon monoxide/hydrocarbon concentrations are much higher. In these situations, the true carbon monoxide/hydrocarbon concentration is not being used to calculate the hourly rolling average. This has two significant consequences of concern to us.[230]

First, you could experience a large carbon monoxide/hydrocarbon spike (as a result of feeding a large or highly volatile batch) which causes the monitor to "peg out." In this situation, the CEMS would record carbon monoxide/hydrocarbon levels that are lower than actual levels. This under-reporting of emission levels would result in an hourly rolling average that is biased low. You may in fact be exceeding the emission standard even though the CEMS indicates you are in compliance. Second, if a carbon monoxide/hydrocarbon excursion causes an automatic waste feed cutoff, you may be allowed to resume hazardous waste burning much sooner than you would be allowed if the CEMS were measuring true hourly rolling averages. This is because you must continue monitoring operating parameter limits and CEMS-monitored emission standards after an automatic waste feed cutoff and you may not restart hazardous waste feeding until all limits and CEMS-monitored emission standards are within permissible levels.[231]

As explained in Part Five, Section VII.D.4 below, we have resolved these "out of span" concerns by including special provisions in today's rule for instances when you encounter hydrocarbon/carbon monoxide CEMS measurements that are above the upper span required by the performance specifications.[232] These special provisions require you to assume hydrocarbons and carbon monoxide are being emitted at levels of 500 ppmv and 10,000 ppmv, respectively, when any one minute average exceeds the upper span level of the detector.[233] Although we did not propose these special provisions, they are a logical outgrowth of the proposed batch feed requirements and commenters concerns about those requirements.

For the reasons discussed above, we conclude that national requirements for batch feed operating parameter limits are not warranted.

c. Activated Carbon Injection. If your combustor is equipped with an activated carbon injection system, you must establish and comply with limits on the following operating parameters: Good particulate matter control, minimum carbon feedrate, minimum carrier fluid flowrate or nozzle pressure drop, and identification of the carbon brand and type or the adsorption characteristics of the carbon. These are the same compliance parameters that we proposed. See 61 FR at 17424.

i. Good Particulate Matter Control. You must comply with the operating parameter limits for particulate matter control (see discussion in Section VII.D.6 below and § 63.1209(m)) because carbon injection controls dioxin/furan in conjunction with particulate matter control. Dioxin/furan is adsorbed onto carbon that is injected into the combustion gas, and the carbon is removed from stack gas by a particulate control device.

Although we proposed to require good particulate matter control as a control technique for dioxin/furan irrespective of whether carbon injection was used, commenters indicate that we have no data demonstrating the relationship between particulate matter and dioxin/furan emissions. Commenters further indicate that dioxin/furan occur predominately in the gas phase, not adsorbed onto particulate. We agree with commenters that hazardous waste combustors operating under the good combustion practices required by this final rule are not likely to have significant carbon particulates in stack gas (i.e., because carbonaceous particulates (soot) are indicative of poor combustion efficiency). Thus, unless activated carbon injection is used as a control technique, dioxin/furan will occur predominately in the gas phase. We therefore conclude that requiring good particulate control as a control technique for dioxin/furan is not warranted unless a source is equipped with activated carbon injection.[234]

ii. Minimum Carbon Feedrate. As proposed, you must establish and continuously monitor a limit on minimum carbon feedrate to ensure that dioxin/furan removal efficiency is maintained. You must establish an hourly rolling average feedrate limit based on operations during the comprehensive performance test. The hourly rolling average limit is established as the average of the test run averages. See Part Five, Sections VII.B.1 and B.3 above for a discussion of the approach for calculating limits from comprehensive performance test data.

iii. Minimum Carrier Fluid Flowrate or Nozzle Pressure Drop. A carrier fluid, gas or liquid, is necessary to transport and inject the carbon into the gas stream. As proposed, you must establish and continuously monitor a limit on either minimum carrier fluid flowrate or pressure drop across the nozzle to ensure that the flow and dispersion of the injected carbon into the flue gas stream is maintained.

We proposed to require you to base the limit on the carbon injection manufacturer's specifications. One commenter notes that there are no manufacturer specifications for carrier gas flowrate or pressure drop. Therefore, the final rule allows you to use engineering information and principles to establish the limit for minimum carrier fluid flowrate or pressure drop across the injection nozzle. You must identify the limit and the rationale for deriving it in the comprehensive performance test plan that you submit for review and approval.

iv. Identification of Carbon Brand and Type or Adsorption Properties. You must either identify the carbon brand and type used during the comprehensive performance test and continue using that carbon, or identify the adsorption properties of that carbon and use a carbon having equivalent or better properties. This will ensure that the carbon's adsorption properties are maintained.[235]

We proposed to require you to use the same brand and type of carbon that was

[230] As explained in Part Five, Section VII.D.4 of the text, this concern is not limited to batch feed operations.

[231] A higher hourly rolling average carbon monoxide level that is above the standard requires a longer period of time to drop below the standard.

[232] The carbon monoxide CEMS upper span level for the high range is 3000 ppmv. The upper span level for hydrocarbon CEMS is 100 ppmv. (See Performance Specifications 4B and 8A in Appendix B, part 60, and the appendix to subpart EEE, part 63—Quality Assurance Procedures for Continuous Emissions Monitors Used for Hazardous Waste Combustors, Section 6.3).

[233] You would not be required to assume these one-minute values if you use a CEMS that meets the performance specifications for a range that is higher than the recorded one-minute average. In this case, the CEMS must meet performance specifications for the higher range as well as the ranges specified in the performance specifications in Appendix B, part 60. See § 63.1209 (a)(3) and (a)(4).

[234] We discuss below, however, that good particulate matter control is also required if a source is equipped with a carbon bed. This is to ensure that particulate control upstream of the carbon bed is maintained to performance test levels to prevent blinding of the bed and loss of removal efficiency.

[235] Examples of carbon properties include specific surface area, pore volume, average pore size, pore size distribution, bulk density, porosity, carbon source, impregnation, and activization procedure. See USEPA, "Technical Support Document for HWC MACT Standards, Volume IV: Compliance with the HWC MACT Standards," July 1999.

used during the comprehensive performance test. Commenters object to this requirement and suggest that they should have the option of using alternative types of carbon that would achieve equivalent or better performance than the carbon used during the performance test. We concur, and the final rule allows you to document in the comprehensive performance test plan key parameters that affect adsorption and the limits you have established on those parameters based on the carbon to be used during the performance test. You may substitute at any time a different brand or type of carbon provided that the replacement has equivalent or improved properties and conforms to the key sorbent parameters you have identified. You must include in the operating record written documentation that the substitute carbon will provide the same level of control as the original carbon.

d. Activated Carbon Bed. If your combustor is equipped with an activated carbon bed, you must establish and comply with limits on the following operating parameters: good particulate matter control; maximum age of each carbon bed segment; identification of carbon brand and type or adsorption properties, and maximum temperature at the inlet or exit of the bed. These are the same compliance parameters that we proposed. See 61 FR at 17424.

i. Good Particulate Matter Control. You must comply with the operating parameter limits for particulate matter control (see discussion in Section VII.D.6 below and § 63.1209(m)). If good control of particulate matter is not maintained prior to the inlet to the carbon bed, particulate matter could contaminate the bed and affect dioxin/furan removal efficiency. In addition, if particulate matter control is used downstream from the carbon bed, those controls must conform to good particulate matter control. This is because this "polishing" particulate matter control device may capture carbon-containing dioxin/furan that may escape from the carbon bed. Thus, the efficiency of this polishing control must be maintained to ensure compliance with the dioxin/furan emission standard.

ii. Maximum Age of Each Bed Segment. As proposed, you must establish a maximum age of each bed segment to ensure that removal efficiency is maintained. Because activated carbon removes dioxin/furan (and mercury) by adsorption, carbon in the bed becomes less effective over time as the active sites for adsorption become occupied. Thus, bed age is an important operating parameter.

At proposal, we requested comment on using carbon aging or some form of a breakthrough calculation to identify a limit on carbon age. See 61 FR at 17424. A breakthrough calculation would give a theoretical minimum carbon change-out schedule that you could use to ensure that breakthrough (i.e., the dramatic reduction in efficiency of the carbon bed due to too many active sites being occupied) does not occur.

Commenters indicate that carbon effectiveness depends on the carbon bed age and pollutant types and concentrations in the gas streams, and therefore a carbon change-out schedule should be based on a breakthrough calculation rather than carbon age. We agree that a breakthrough calculation may be a better measurement of carbon effectiveness, but it would be difficult to define generically for all situations. A breakthrough calculation could be performed only after experimentation determines the relationship between incoming adsorbed chemicals and the adsorption rate of the carbon. The adsorption rate of carbon could be determined experimentally, but the speciation of adsorbed chemicals in a flue gas stream is site-specific and may vary greatly at a given site over time.

We conclude that because carbon age contributes to carbon ineffectiveness, it serves as an adequate surrogate and is less difficult to implement on a national basis. Therefore, the rule requires sources to identify maximum carbon age as the maximum age of each bed segment during the comprehensive performance test. Carbon age is measured in terms of the cumulative volume of combustion gas flow through the carbon since its addition to the bed. Sources may use the manufacturer's specifications rather than actual bed age during the initial comprehensive performance test to identify the initial limit on maximum bed age. If you elect to use manufacturer's specifications for the initial limit on bed age, you must also recommend in the comprehensive performance test plan submitted for review and approval a schedule of dioxin/furan testing prior to the confirmatory performance test that will confirm that the manufacturer's specification of bed age is sufficient to ensure that you maintain compliance with the emission standard.

If either existing or new sources prefer to use some form of breakthrough calculation to establish maximum bed age, you may petition permitting officials under § 63.1209(g)(1) [236] to apply for an alternative monitoring scheme.

iii. Identification of Carbon Brand and Type or Adsorption Properties. You must either identify the carbon brand and type used during the comprehensive performance test and continue using that carbon, or identify the adsorption properties of that carbon and use a carbon having equivalent or better properties. This requirement is identical to that discussed above for activated carbon injection systems.

iv. Maximum Temperature at the Inlet or Exit of the Bed. You must establish and continuously monitor a limit on the maximum temperature at the inlet or exit of the carbon bed. This is because a combustion gas temperature spike can cause adsorbed dioxin/furan (and mercury) to desorb and reenter the gas stream. In addition, the adsorption properties of carbon are adversely affected at higher temperatures.

At proposal, we requested comment on whether it would be necessary to control temperature at the inlet to the carbon bed. See 61 FR at 17425. Some commenters support temperature control noting the concern that temperature spikes could cause desorption of dioxin/furan (and mercury). We concur, and are requiring you to establish a maximum temperature limit at the inlet or exit of the bed. We are allowing you the option of measuring temperature at either end of the bed to give you greater flexibility in locating the temperature continuous monitoring system. Monitoring temperature at either end of the bed should be adequate to ensure that bed temperatures are maintained at levels not exceeding those during the comprehensive performance test (because the temperature remains relatively constant across the bed).

You must establish an hourly rolling average temperature limit based on operations during the comprehensive performance test. The hourly rolling average limit is established as the average of the test run averages. See Part Five, Sections VII.B.1 and B.3 above for a discussion of the approach for calculating limits from comprehensive performance test data.

e. Catalytic Oxidizer. If your combustor is equipped with a catalytic oxidizer, you must establish and comply with limits on the following operating parameters: minimum gas temperature

[236] We have incorporated the alternative monitoring provisions of § 63.8(f) in § 63.1209(g)(1) so that alternative monitoring provisions for nonCEMS CMS can be implemented by authorized States. The alternative monitoring provisions of § 63.1209(g)(1) do not apply to CEMS, however. The alternative monitoring provisions of § 63.8(f) continue to apply to CEMS because implementation of those provisions is not eligible to be delegated to States at this time.

at the inlet of the catalyst; maximum age in use; catalyst replacement specifications; and maximum flue gas temperature at the inlet of the catalyst. These are the same compliance parameters that we proposed. See 61 FR at 17425.

Catalytic oxidizers used to control stack emissions are similar to those used in automotive and industrial applications. The flue gas passes over catalytic metals, such as palladium and platinum, supported by an alumina washcoat on some metal or ceramic substrate. When the flue gas passes through the catalyst, a reaction takes place similar to combustion, converting hydrocarbons to carbon monoxide, then carbon dioxide. Catalytic oxidizers can also be "poisoned" by lead and other metals in the same manner as automotive and industrial catalysts.

i. Minimum Gas Temperature at the Inlet of the Catalyst. You must establish and continuously monitor a limit on the minimum flue gas temperature at the inlet of the catalyst to ensure that the catalyst is above light-off temperature. Light-off temperature is that minimum temperature at which the catalyst is hot enough to catalyze the reactions of hydrocarbons and carbon monoxide.

You must establish an hourly rolling average temperature limit based on operations during the comprehensive performance test. The hourly rolling average limit is established as the average of the test run averages.

ii. Maximum Time In-Use. You must establish a limit on the maximum time in-use of the catalyst because a catalyst is poisoned and generally degraded over use. You must establish the limit based on the manufacturer's specifications.

iii. Catalytic Metal Loading, Maximum Space-Time, and Substrate Construct. When you replace a catalyst, the replacement must be of the same design to ensure that destruction efficiency is maintained. Consequently, the rule requires that you specify the following catalyst properties: Loading of catalytic metals; space-time; and monolith substrate construction.

Catalytic metal loading is important because, without sufficient catalytic metal on the catalyst, it does not function properly. Also, some catalytic metals are more efficient than others. Therefore, the replacement catalyst must have at least the same catalytic metal loading for each catalytic metal as the catalyst used during the comprehensive performance test.

Space-time, expressed in inverse seconds (s^{-1}), is defined as the maximum rated volumetric flow through the catalyst divided by the volume of the catalyst. This is important because it is a measure of the gas flow residence time and, hence, the amount of time the flue gas is in the catalyst. The longer the gas is in the catalyst, the more time the catalyst has to cause hydrocarbons and carbon monoxide to react. Replacement catalysts must have the same or lower space-time as the one used during the comprehensive performance test.

Substrate construction is also an important parameter affecting destruction efficiency of the catalyst. Three factors are important. First, substrates for industrial applications are typically monoliths, made of rippled metal plates banded together around the circumference of the catalyst. Ceramic monoliths and pellets can also be used. Because of the many types of substrates, you must use the same materials of construction, monolith or pellets and metal or ceramic, used during the comprehensive performance test as replacements. Second, monoliths form a honeycomb like structure when viewed from one end. The pore density (i.e., number of pores per square inch) is critical because the pores must be small enough to ensure intimate contact between the flue gas and the catalyst but large enough to allow unrestricted flow through the catalyst. Therefore, if you use a monolith substrate during the comprehensive performance test, the replacement catalyst must have the same pore density. Third, catalysts are supported by a washcoat, typically alumina. We require that replacement catalysts have the same type and loading of washcoat as was on the catalyst used during the comprehensive performance test.

iv. Maximum Flue Gas Temperature at the Inlet to the Catalyst. You must establish and continuously monitor a limit on maximum flue gas temperature at the inlet to the catalyst. Inlet temperature is important because sustained high flue gas temperature can result in sintering of the catalyst, degrading its performance. You must establish the limit as an hourly rolling average, based on manufacturer specifications.

In the proposed rule, we would have allowed a waiver from these operating parameter limits if you documented to the Administrator that establishing limits on other operating parameters would be more appropriate to ensure that the dioxin/furan destruction efficiency of the oxidizer is maintained after the performance test. See 61 FR at 17425. We are not finalizing a specific waiver for catalytic oxidizer parameters because you are eligible to apply for the same relief under the existing alternative monitoring provisions of § 63.1209(g)(1).

f. Dioxin/Furan Formation Inhibitor. If you feed a dioxin/furan formation inhibitor into your combustor as an additive (e.g., sulfur), you must: (1) Establish a limit on minimum inhibitor feedrate; and (2) identify either the brand and type of inhibitor or the properties of the inhibitor.

i. Minimum Inhibitor Feedrate. As proposed, you must establish and continuously monitor a limit on minimum inhibitor feedrate to help ensure that dioxin/furan formation reactions continue to be inhibited at levels of the comprehensive performance test. See 61 FR at 17425. You must establish an hourly rolling average feedrate limit based on operations during the comprehensive performance test. The hourly rolling average limit is established as the average of the test run averages.

This minimum inhibitor feedrate pertains to additives to feedstreams, not naturally occurring inhibitors that may be found in fossil fuels, hazardous waste, or raw materials. At proposal, we requested comment on whether it would be appropriate to establish feedrate limits on the amount of naturally occurring inhibitors based on levels fed during the comprehensive performance test. See 61 FR at 17425. For example, it is conceivable that a source would choose to burn high sulfur fuel or waste only during the comprehensive performance test and then switch back to low sulfur fuels or waste after the test, thus reducing dioxin/furan emissions during the comprehensive test to levels that would not be maintained after the test. Commenters do not provide information on this matter and we do not have enough information on the types or effects of naturally occurring substances that may act as inhibitors. Therefore, the final rule does not establish limits on naturally occurring inhibitors. Permitting officials, however, may choose to address the issue of naturally occurring inhibitors when warranted during review of the comprehensive performance test plan. (See discretionary authority of permitting officials under § 63.1209(g)(2) to impose additional or alternative operating parameter limits on a site-specific basis.)

ii. Identification of Either the Brand and Type of Inhibitor or the Properties of the Inhibitor. As proposed, you must either identify the inhibitor brand and type used during the comprehensive performance test and continue using that inhibitor, or identify the properties of that inhibitor that affect its ability to inhibit dioxin/furan formation reactions and use an inhibitor having equivalent

or better properties. This requirement is identical to that discussed above for activated carbon systems.

2. What Are the Operating Parameter Limits for Mercury?

You must maintain compliance with the mercury emission standard by establishing and complying with limits on operating parameters. See § 63.1209(l). The following table summarizes these operating parameter limits. All sources must comply with the limits on mercury feedrate. Other operating parameter limits apply if you use the mercury control technique to which they apply.

Summary of Mercury Monitoring Requirements

Control Technique	Compliance Using	Limits From	Averaging Period	How Limit Is Established
Limit on Maximum Total Mercury Feedrate in all Feedstreams	Sampling and analysis of feedstreams for mercury concentration and a continuous monitoring system for feedstream flowrate[1]	Comprehensive performance test	12-hour	Average of the test run averages
Activated Carbon Injection	Monitoring requirements are the same as required for compliance assurance with the dioxin/furan emission standard. See Section VII.D.1 above.			
Activated Carbon Bed	Monitoring requirements are the same as required for compliance assurance with the dioxin/furan emission standard. See Section VII.D.1 above.			
Wet Scrubber	Monitoring requirements are the same as required for compliance assurance with the hydrochloric acid/chlorine gas emission standard. See Section VII.D.5 below.			

[1] This limit applies to all feedstreams, except natural gas, process air, and feedstreams from vapor recovery systems. See the discussion on maximum semivolatile metal and low volatile metal feedrate limits below in the text.

Mercury emissions from hazardous waste combustors are controlled by controlling the feedrate of mercury, wet scrubbing to remove soluble mercury species (e.g, mercuric chloride), and carbon adsorption. We discuss below the operating parameter limits that apply to each control technique. We also discuss why we are not limiting the temperature at the inlet to the dry particulate matter control device as a control parameter for mercury.

a. Maximum Mercury Feedrate. As proposed, you must establish and comply with a maximum total feedrate limit for mercury for all feedstreams. See 61 FR at 17428. The amount of mercury fed into the combustor directly affects emissions and the removal efficiency of emission control equipment. To establish and comply with the feedrate limit, you must sample and analyze and continuously monitor the flowrate of all feedstreams (including hazardous waste, raw materials, and other fuels and additives) except natural gas, process air, and feedstreams from vapor recovery systems for mercury content.[237] As proposed, you must establish a maximum 12-hour rolling average feedrate limit based on operations during the comprehensive performance test as the average of the test run averages.

Rather than establish mercury feedrate limits as the levels fed during the comprehensive performance test, you may request as part of your performance test plan to use the mercury feedrates and associated emission rates during the performance test to extrapolate to higher allowable feedrate limits and emission rates. See Section VII.D.3 below for a discussion of the rationale and procedures for obtaining approval to extrapolate metal feedrates.

In addition, you may use the performance test waiver provision under § 63.1207(m) to document compliance with the emission standard. Under that provision, you must monitor the total mercury feedrate from all feedstreams and the gas flowrate and document that the maximum theoretical emission concentration does not exceed the mercury emission standard. Thus, this is another compliance approach where you would not establish feedrate limits on mercury during the comprehensive performance test.

b. Wet Scrubbing. As proposed, if your combustor is equipped with a wet scrubber, you must establish and comply with limits on the same operating parameters (and in the same manner) that apply to compliance assurance with the hydrochloric acid/chlorine gas emission standard for wet scrubbers. See Section VII.D.5 below for a discussion of those parameters.

c. Activated Carbon Injection. As proposed, if your combustor is equipped with an activated carbon injection system, you must establish and comply with limits on the same operating parameters (and in the same manner) that apply to compliance assurance with the dioxin/furan emission standard for activated carbon injection systems.

d. Activated Carbon Bed. As proposed, if your combustor is equipped with an activated carbon bed, you must establish and comply with limits on the same operating parameters (and in the same manner) that apply to compliance assurance with the dioxin/furan emission standard for activated carbon beds.

e. Consideration of a Limit on Maximum Inlet Temperature to a Dry Particulate Matter Control Device. The final rule does not require you to control inlet temperature to a dry particulate

[237] See discussion in Section VII.D.3. below in the text for rationale for exempting these feedstreams for monitoring for mercury content.

matter air pollution control device to control mercury emissions. At proposal, we expressed concern that high inlet temperatures to a dry particulate matter control device could cause low mercury removal efficiency because mercury volatility increases with increasing temperature. See 61 FR at 17428. Therefore, we proposed to limit inlet temperatures to levels during the comprehensive performance test.

Commenters suggest that a maximum inlet temperature for dry particulate matter control devices is not needed because mercury is generally highly volatile within the range of inlet temperatures of all dry particulate matter control devices. We are persuaded by the commenters that inlet temperature to these devices is not critically important to mercury control, although temperature can potentially have an impact on the volatility of certain mercury species (e.g., oxides). We conclude that the other operating parameter limits are sufficient to ensure compliance with the mercury emission standard. In particular, we note that a limit on maximum inlet temperature to these control devices is required for compliance assurance with the dioxin/furan, semivolatile metal, and low volatile metal emission standards.

3. What Are the Operating Parameter Limits for Semivolatile and Low Volatile Metals?

You must maintain compliance with the semivolatile metal and low volatile metal emission standards by establishing and complying with limits on operating parameters. See § 63.1209(n). The following table summarizes these operating parameter limits. All sources must comply with the limits on feedrates of semivolatile metals, low volatile metals, and chlorine. Other operating parameter limits apply depending on the type of particulate matter control device you use.

BILLING CODE 6560–50–P

Summary of Semivolatile and Low Volatile Metals Monitoring Requirements

Control Technique	Compliance Using	Limit From	Averaging Period	How Limit Is Established
Good Particulate Matter Control	Monitoring requirements are the same as required for compliance assurance with the particulate matter standard. See Section VII.D.6 below.			
Limit on Maximum Inlet Temperature to Dry Particulate Matter Control Device	Continuous monitoring system (CMS)	Comprehensive performance test		
			1-hour	Avg of the test run averages
Limit on Maximum Total Semivolatile and Low Volatile Metal Feedrates from all Feedstreams	Sampling and analysis of feedstreams[1] for metals concentrations and a CMS for feedstream flowrate	Comprehensive performance test	12-hour	Avg of the average hourly rolling averages for each run
Limit on Maximum Total Pumpable Low Volatile Metal Feedrate from all Feedstreams	Sampling and analysis of feedstreams[1] for metals concentrations and a CMS for feedstream flowrate	Comprehensive performance test	12-hour	Avg of the average hourly rolling averages for each run
Limit on Maximum Total Chlorine Feedrate from all Feedstreams	Sampling and analysis of feedstreams[1] for chlorine and chloride concentrations and a CMS for feedstream flowrate	Comprehensive performance test	12-hour	Avg of the average hourly rolling averages for each run

[1] This limit applies to all feedstreams, except natural gas, process air, and feedstreams from vapor recovery systems. See the discussion on maximum semivolatile metal and low volatile metal feedrate limits below in the text.

BILLING CODE 6560–50–C

Semivolatile and low volatile metal emissions from hazardous waste combustors are controlled by controlling the feedrate of the metals and particulate matter emissions. In addition, because chlorine feedrate can affect the volatility of metals and thus metals levels in the combustion gas, and because the temperature at the inlet to the dry particulate matter control device can affect whether the metal is in the vapor (gas) or solid (particulate) phase, control of these parameters is also important to control emissions of these metals. We discuss below the operating parameter limits that apply to each control technique. We also discuss use of metal surrogates during performance testing, provisions for allowing extrapolation of performance test feedrate levels to calculate metal feedrate limits, and conditional waiver of the limit on low volatile metals in pumpable feedstreams.

a. Good Particulate Matter Control. As proposed, you must comply with the operating parameter limits for particulate matter control (see discussion in Section VII.D.6 below and § 63.1209(m)) because semivolatile and low volatile metals are primarily in the solid (particulate) phase at the gas temperature (i.e., 400°F or lower) of the particulate matter control device. Thus, these metals are largely removed from flue gas as particulate matter.

b. Maximum Inlet Temperature to Dry Particulate Matter Control Device. As proposed, you must establish and continuously monitor a limit on the maximum temperature at the inlet to a dry particulate matter control device. Although most semivolatile and low volatile metals are in the solid, particulate phase at the temperature at the inlet to the dry control device mandated by today's rule (i.e., 400°F or lower), some species of these metals remain in the vapor phase. We are requiring a limit on maximum temperature at the inlet to the control device to ensure that the fraction of these metals that are volatile (and thus not controlled by the particulate matter control device) does not increase during operations after the comprehensive performance test.

As proposed, you must establish an hourly rolling average temperature limit based on operations during the comprehensive performance test. The hourly rolling average limit is established as the average of the test run averages. See Part Five, Sections VII.B.1 and B.3 above for a discussion of the approach for calculating limits from comprehensive performance test data.

Commenters suggest that this limit may conflict with the maximum temperature limit at the inlet to the particulate matter control device that is also required for compliance assurance with the dioxin/furan emission standard. We do not understand commenters' concern. If for some reason the dioxin/furan and metals emissions tests are not conducted simultaneously, the governing temperature limit will be the lower of the limits established from the separate tests. This provides compliance assurance for both standards.

c. Maximum Semivolatile and Low Volatile Metals Feedrate Limits. You must establish limits on the maximum total feedrate of both semivolatile metals and low volatile metals from all feedstreams at levels fed during the comprehensive performance test. Metals feedrates are related to emissions in that, as metals feedrates increase at a source, metals emissions increase. See Part Four, Section II.A above for discussion on the relationship between metals feedrates and emissions. Thus, metals feedrates are an important control technique.

For low volatile metals, you must also establish a limit on the maximum total feedrate of pumpable liquids from all feedstreams. The rule requires a separate limit for pumpable feedstreams because metals present in pumpable feedstreams may partition between the combustion gas and bottom ash (or kiln product) at a higher rate than metals in nonpumpable feedstreams (i.e., low volatile metals in pumpable feedstreams tend to partition primarily to the combustion gas). The rule does not require a separate limit for semivolatile metals in pumpable feedstreams because partitioning between the combustion gas and bottom ash or product for these metals does not appear to be affected by the physical state of the feedstream.[238]

To establish and comply with the feedrate limits, you must sample and analyze and continuously monitor the flowrate of all feedstreams (including hazardous waste, raw materials, and other fuels and additives) except natural gas, process air, and feedstreams from vapor recovery systems for semivolatile and low volatile metals content. As proposed, you must establish maximum 12-hour rolling average feedrate limits based on operations during the comprehensive performance test as the average of the test run averages.

i. Use of Metal Surrogates. You may use one metal within a volatility group as a surrogate during comprehensive performance testing for other metals in that volatility group. For example, you may use chromium as a surrogate during the performance test for all low volatile metals. Similarly, you may use lead as a surrogate for cadmium, the other semivolatile metal. This is because the metals within a volatility group have generally the same volatility. Thus, they will generally be equally difficult to control with an emissions control device.

In addition, you may use either semivolatile metal as a surrogate for any low volatile metal because semivolatile metals will be more difficult to control than low volatile metals.[239] This will help alleviate concerns regarding the need to spike each metal during comprehensive performance testing. If you want to spike metals, you need not spike each metal to comply with today's rule but only one metal within a volatility group (or potentially one semivolatile metal for both volatility groups).

ii. Extrapolation of Performance Test Feedrate Levels to Calculate Metal Feedrate Limits.[240] You may request under § 63.1209(n)(2)(ii) to use the metal feedrates and emission rates associated with the comprehensive performance test to extrapolate feedrate limits and emission rates at levels higher than demonstrated during the performance test. Extrapolation can be advantageous because it avoids much of the spiking that sources normally undertake during compliance testing and the associated costs, risks to operating and testing personnel, and environmental loading from emissions.

Under an approved extrapolation approach, you would be required to feed metals at no less than normal rates to narrow the amount of extrapolation requested. Further, we expect that some spiking would be desired to increase confidence in the measured, performance test feedrate levels that will be used to project feedrate limits (i.e., the errors associated with sampling and analyzing heterogeneous feedstreams can be minimized by spiking known quantities). Extrapolation approaches that request feedrate limits that are significantly higher than the historical range of

[238] See USEPA., "Technical Support Document for HWC MACT Standards, Volume IV: Compliance with the MACT Standards," February 1998.

[239] This is because a greater portion of semivolatile metals volatilize in the combustion chamber and condenses in the flue gas on small particulates or as fume. The major portion of low volatile metals in flue gas are entrained on larger particulates (rather than condensing from volatile species) and are thus easier to remove with a particulate control device.

[240] Although this extrapolation discussion is presented in context of semivolatile and low volatile metal feedrates, similar provisions could be implemented for mercury feedrates.

feedrates should not be approved. Extrapolated feedrate limits should be limited to levels within the range of the highest historical feedrates for the source. We are taking this policy position to avoid creating an incentive to burn wastes with higher than historical levels of metals. Metals are not destroyed by combustion but rather are emitted as a fraction of the amount fed to the combustor. If you want to burn wastes with higher than historical levels of metals, you must incur the costs and address the hazards to plant personnel and testing crews associated with spiking metals into your feedstreams during comprehensive performance testing.

Although we also investigated downward interpolation (i.e., between the measured feedrate and emission level and zero), we are concerned that downward interpolation may not be conservative. Our data indicates that system removal efficiency can decrease as metal feedrate decreases. Thus, actual emissions may be higher than emissions projected by interpolation for lower feedrates. Consequently, we are not allowing downward interpolation.

We are not specifying an extrapolation methodology to provide as much flexibility as possible to consider extrapolation methodologies that would best meet individual needs. We have investigated extrapolation approaches [241] and discussed in the May 1997 NODA a statistical extrapolation methodology. Commenters raise concerns, however, about defining a single acceptable extrapolation method. They note that other methods might be developed in the future that prove to be better, especially for a given source. We agree that the approach discussed in the NODA may be too inflexible and are not promulgating it today.[242] Consequently, today's rule does not specify a single method but allows you to recommend a method for review and approval by permitting officials.

Your recommended extrapolation methodology must be included in the performance test plan. See § 63.1207(f)(1)(x). Permitting officials will review the methodology considering in particular whether: (1) Performance test metal feedrates are appropriate (i.e., whether feedrates are at least at normal levels, whether some level of spiking would be appropriate depending on the heterogeneity of the waste, and whether the physical form and species of spiked material is appropriate); and (2) the requested, extrapolated feedrates are warranted considering historical metal feedrate data.

We received comments both in favor of and in opposition to metals extrapolation and interpolation. Those in favor suggest extrapolation would simplify the comprehensive performance test procedure, reduce costs, and decrease emissions during testing. Those in opposition are concerned about: (1) Whether there is a predictable relationship between feedrates and emission rates; (2) the possibility of higher overall metals loading to the environment over the life of the facility (i.e., because higher feedrate limits would be relatively easy to obtain); (3) the difficulty in defining a "normal" feedrate for facilities with variable metal feeds; and (4) whether all conditions influencing potential metals emissions, such as combustion temperature and metal compound speciation, could be adequately considered.

Given the pros and cons associated with various extrapolation methodologies and policies, we are still concerned that sources would be able to: (1) Feed metals at higher rates without a specific compliance demonstration of the associated metals emissions; and (2) obtain approval to feed metals at higher levels than normal, even though all combustion sources should be trying to minimize metals feedrates. However, because the alternative is metal spiking (as evidenced in facility testing for BIF compliance) and metal spiking is a significant concern as well, we find that the balance is better struck by allowing, with site-specific review and where warranted approval, extrapolation as a means to reduce unnecessary emissions, reduce unnecessary costs incurred by facilities, and better protect the health of testing personnel during performance tests.

iii. Conditional Waiver of Limit on Low Volatile Metals in Pumpable Feedstreams. Commenters indicate that they may want to base feedrate limits only on the worst-case feedstream—pumpable hazardous waste. The feedrate limit would be based only on the feedrate of the pumpable hazardous waste during the comprehensive performance test, even though nonpumpable feedstreams would be contributing some metals to emissions. In this situation, commenters suggest that separate feedrate limits for total and pumpable feedstreams would not be needed. We agree that if you define the total feedstream feedrate limit as the pumpable feedstream feedrate during the performance test, dual limits are not required. The feedrate of metals in total feedstreams must be monitored and shown to be below the pumpable feedstream-based limit. See § 63.1209(n)(2)(C).

iv. Response to other Comments. We discuss below our response to several other comments: (1) Recommendation for national uniform feedrate limits; (2) concerns that feedstream monitoring is problematic; and (3) recommendations that monitoring natural gas and vapor recovery system feedstreams is unnecessary.

A commenter states that nationally uniform feedrate limits are needed for metals and chlorine and that any other approach would be inconsistent with the CAA. The commenter stated that hazardous waste combustion device operators should not be allowed to self-select any level of toxic metal feedrate just because they can show compliance with the MACT standard. We believe that standards prescribing national feedrate limits on metals or chlorine are not necessary to ensure MACT control of metals and hydrochloric acid/chlorine gas and may be overly restrictive. Emissions of metals and hydrochloric acid/chlorine gas are controlled by controlling the feedrate of metals and chlorine, and emission control devices. In developing MACT standards for a source category, if we can identify emission levels that are being achieved by the best performing sources using MACT control, we generally establish the MACT standard as an emission level rather than prescribed operating limits (e.g., feedrate limits). This approach is preferable because it gives the source the option of determining the most cost-effective measures to comply with the standard. Some sources may elect to comply with the emission standards using primarily feedrate control, while others may elect to rely primarily on emission controls. Under either approach, the emission levels are equivalent to those being achieved by the best performing existing sources. Other factors that we considered in determining to express the standards as an emission level rather than feedrate limits include: (1) There is not a single, universal correlation factor between feedrate and metal emissions to use to determine a national feedrate that would be equivalent to the emission levels achieved by the best performing sources; (2) emission standards communicate better to the public that meaningful controls are being applied because the hazardous waste combustor

[241] See USEPA, "Draft Technical Support Document for HWC MACT Standards (NODA), Volume III: Evaluation of Metal Emissions Database to Investigate Extrapolation and Interpolation Issues," April 1997.

[242] We plan to develop guidance on approaches that provide greater flexibility.

emission standards can be compared to standards for other waste combustors (e.g., municipal and medical waste combustors) and combustion devices; and (3) CEMS, the ultimate compliance assurance tool that we encourage sources to use,[243] are incompatible with standards expressed as feedrate limits.

Another commenter is concerned that feedrate monitoring of highly heterogeneous waste streams is problematic and analytical turnaround times can be rather long. The commenter suggests that alternatives beyond feedstream monitoring (such as predictive emissions monitoring) should be allowed. Although we acknowledge that there may be difficulties in monitoring the feedrate of metals or chlorine in certain waste streams, there generally is no better way to assure compliance with these standards other than using CEMS. Predictive modeling appears to introduce unnecessarily some greater compliance uncertainty than feedstream testing. Thus, we conclude that feedstream monitoring is a necessary monitoring tool if a multimetals CEMS is not used. (We also note that feedstream monitoring under MACT will not be substantially more burdensome or problematic than the requirements now in place under RCRA regulations.)

In addition, another commenter suggests that sources should not have to monitor metals and chlorine in natural gas feedstreams because it is impractical and levels are low and unvarying. The commenter suggests that sources should be allowed to use characterization data from natural gas vendors. We agree that the cost and possible hazards of monitoring natural gas for metals and chlorine is not warranted because our data shows metals are not present at levels of concern. Therefore, you are not required to monitor metals and chlorine levels in natural gas feedstreams. However, you must document in the comprehensive performance test plan the expected levels of these constituents and account for the expected levels in documenting compliance with feedrate limits (e.g., by assuming worst-case concentrations and monitoring the natural gas flowrate). See § 63.1209(c)(5).

Finally, some commenters are concerned that feedstreams from vapor recovery systems (e.g., waste fuel tank and container emissions) are difficult, costly, and often dangerous to monitor frequently for metals and chlorine levels. Particularly because of some of the safety issues concerned, the rule does not require continuous monitoring of metals and chlorine for feedstreams from vapor recovery systems. However, as is the case for natural gas, you must document in the comprehensive performance test plan the expected levels of these constituents and account for the expected levels in documenting compliance with feedrate limits.

d. Maximum Chlorine Feedrate. As proposed, you must establish a limit on the maximum feedrate for total chlorine (both organic and inorganic) in all feedstreams based on the level fed during the comprehensive performance test. A limit on maximum chlorine feedrate is necessary because most metals are more volatile in the chlorinated form. Thus, for example, more low volatile metals may report to the combustion gas as a vapor than would be otherwise be entrained in the combustion gas absent the presence of chlorine. In addition, the vapor form of the metal is more difficult to control. Although most semivolatile and low volatile metal species are in the particulate phase at gas temperatures at the inlet to the particulate matter control device, semivolatile metals that condense from the vapor phase partition to smaller particulates and are more difficult to control than low volatile metals that are emitted in the form of entrained, larger particulates.

To establish and comply with the feedrate limit, you must sample and analyze, and continuously monitor the flowrate, of all feedstreams (including hazardous waste, raw materials, and other fuels and additives) except natural gas, process air, and feedstreams from vapor recovery systems for total chlorine content. As proposed, you must establish a maximum 12-hour rolling average feedrate limit based on operations during the comprehensive performance test as the average of the test run averages.

Commenters suggest that chlorine feedrate limits are not needed for sources with semivolatile and low volatile metal feedrates, when expressed as maximum theoretical emission concentrations, less than the emission standard. We agree. In this situation, you would be eligible for the waiver of performance test under § 63.1207(m). The requirements of that provision (e.g., monitor and record metals feedrates and gas flowrates to ensure that metals feedrate, expressed as a maximum theoretical emission concentration, does not exceed the emission standard) apply in lieu of the operating parameter limits based on performance testing discussed above. We note, however, that you would still need to establish a maximum feedrate limit for total chlorine as an operating parameter limit for the hydrochloric acid/chlorine gas emission standard (discussed below), unless you also qualified for a waiver of that emission standard under § 63.1207(m).

4. What Are the Monitoring Requirements for Carbon Monoxide and Hydrocarbon?

You must maintain compliance with the carbon monoxide and hydrocarbon emission standards using continuous emissions monitoring systems (CEMS). In addition, you must use an oxygen CEMS to correct continuously the carbon monoxide and hydrocarbon levels recorded by their CEMS to 7 percent oxygen.

As proposed, the averaging period for carbon monoxide and hydrocarbon CEMS is a one-hour rolling average updated each minute. This is consistent with current RCRA requirements and commenters did not recommend an alternative averaging period.

We also are promulgating performance specifications for carbon monoxide, hydrocarbon, and oxygen CEMS. The carbon monoxide and oxygen CEMS performance specifications are codified as Performance Specification 4B in appendix B, part 60. This performance specification is the same as the specification currently used for BIFs in appendix IX, part 266. It also is very similar to existing appendix B, part 60 Performance Specifications 3 (for oxygen) and 4A (for carbon monoxide). New specification 4B references many of the provisions of Specifications 3 and 4A.

The hydrocarbon CEMS performance specification is codified as Performance Specification 8A in appendix B, part 60. This specification is also identical to the specification currently used for BIFs in section 2.2 of appendix IX, part 266, with one exception. We deleted the quality assurance section and placed it in the appendix to subpart EEE of part 63 promulgated today to be consistent with our approach to part 60 performance specifications.

We discuss below several issues pertaining to monitoring with these CEMS: (1) The requirement to establish site-specific alternative span values in some situations; (2) consequences of exceeding the span value of the CEMS; and (3) the need to adjust the oxygen correction factor during startup and shutdown.

a. When Are You Required to Establish Site-Specific Alternative Span

[243] As discussed previously in the text, feedrate limits as a compliance tool can be problematic for difficult to sample or analyze feedstreams. Further, the emissions resulting from a given feedrate level may increase (or decrease) over time, providing uncertainty about actual emissions.

Values? As proposed, if you normally operate at an oxygen correction factor of more than 2 (e.g., a cement kiln monitoring carbon monoxide in the by-pass duct), you must use a carbon monoxide or hydrocarbon CEMS with a span proportionately lower than the values prescribed in the performance specifications relative to the oxygen correction factor at the CEMS sampling point. See the appendix to Subpart EEE, part 63: Quality Assurance Procedures for Continuous Emissions Monitors Used for Hazardous Waste Combustors.

This requirement arose from our experience with implementing the BIF rule when we determined that the prescribed span values for the carbon monoxide and hydrocarbon CEMS may lead to high error in corrected emission values due to the effects of making the oxygen correction. For example, a cement kiln may analyze for carbon monoxide emissions in the by-pass duct with oxygen correction factors on the order of 10. At the low range of the carbon monoxide CEMS span—200 ppm as prescribed by Performance Specification 4B—with an acceptable calibration drift of three percent, an error of 6 ppm is the result. Accounting for the oxygen correction factor of 10, however, drives the error in the measurement due to calibration drift up to 60 ppm. This is more than half the carbon monoxide emission standard of 100 ppm and is not acceptable. At carbon monoxide readings close to the 100 ppm standard, true carbon monoxide levels may be well above or well below the standard.

Consider the same example under today's requirement. For an oxygen correction factor of 10, the low range span for the carbon monoxide CEMS must be 200 divided by 10, or 20 ppm. The allowable calibration drift of three percent of the span allows an error of 0.6 ppm at 20 ppm. Applying an oxygen correction factor of 10 results in an absolute calibration drift error of 6ppm at an oxygen-corrected carbon monoxide reading of 200.

b. What Are the Consequences of Exceeding the Span Value for Carbon Monoxide and Hydrocarbon CEMS? If you do not elect to use a carbon monoxide CEMS with a higher span value of 10,000 ppmv and a hydrocarbon CEMS with a higher span value of 500 ppmv, you must configure your CEMS so that a one-minute carbon monoxide value reported as 3,000 ppmv or greater must be recorded (and used to calculate the hourly rolling average) as 10,000 ppmv, and a one-minute hydrocarbon value reported as 200 ppmv or greater must be recorded as 500 ppmv.

If you elect to use a carbon monoxide CEMS with a span range of 0–10,000 ppmv, you must use one or more carbon monoxide CEMS that meet the Performance Specification 4B for three ranges: 0–200 ppmv; 1–3,000 ppmv; and 0–10,000 ppmv. Specification 4B provides requirements for the first two ranges. For the (optional) high range of 0–10,000 ppmv, the CEMS must also comply with Performance Specification 4B, except that the calibration drift must be less than 300 ppmv and calibration error must be less than 500 ppmv. These values are based on the allowable drift and error, expressed as a percentage of span, that the specification requires for the two lower span levels.

If you elect to use a hydrocarbon CEMS with a span range of 0–500 ppmv, you must use one or more hydrocarbon CEMS that meet Performance Specification 8A for two ranges: 0–100 ppmv, and 0–500 ppmv. Specification 8A provides requirements for the first range. For the (optional) high range of 0–500 ppmv, the CEMS must also comply with Performance Specification 8A, except: (1) The zero and high-level daily calibration gas must be between 0 and 100 ppmv and between 250 and 450 ppmv, respectively; (2) the strip chart recorder, computer, or digital recorder must be capable of recording all readings within the CEMS measurement range and must have a resolution of 2.5 ppmv; (3) the CEMS calibration must not differ by more than ±15 ppmv after each 24 hour period of the seven day test at both zero and high levels; (4) the calibration error must be no greater than 25 ppmv; and (5) the zero level, mid-level, and high level values used to determine calibration error must be in the range of 0–200 ppmv, 150–200 ppmv, and 350–400 ppmv, respectively. These requirements for the optional high range (0–500 ppmv) are derived proportionately from the requirements in Specification 8A for the lower range (0–100 ppmv).

The rule provides this requirement because we are concerned that, when carbon monoxide and hydrocarbon monitors record a one-minute value at the upper span level, the actual level of carbon monoxide or hydrocarbons may be much higher (i.e., these CEMS often "peg-out" at the upper span level). This has two inappropriate consequences. First, the source may actually be exceeding the carbon monoxide or hydrocarbon standard even though the CEMS indicates that it is not. Second, if the carbon monoxide or hydrocarbon hourly rolling average were to exceed the standard, triggering an automatic waste feed cutoff, the emission level may drop back below the standard much sooner than it otherwise would if the actual one-minute average emission levels were recorded (i.e., rather than one-minute averages pegged at the upper span value). Thus, this diminishes the economic disincentive for incurring automatic waste feed cutoffs of not being able to restart the hazardous waste feed until carbon monoxide and hydrocarbon levels are below the standard.

We considered applying these "out-of-span" requirements when any recorded value (i.e., any value recorded by the CEMS on a frequency of at least every 15 seconds), rather than one-minute average values, exceeded the upper span level. Commenters point out, however, that CEMS may experience short-term electronic glitches that cause the monitored output to spike for a very short time period. We concur, and conclude that we should be concerned only about one-minute average values because these short-term electronic glitches (that are not caused by emission excursions) could result in an undesirable increase in automatic waste feed cutoffs.

You may prefer to use carbon monoxide or hydrocarbon CEMS that have upper span values between 3,000 and 10,000 ppmv and between 100 and 500 ppmv, respectively. If you believe that you would not have one-minute average carbon monoxide or hydrocarbon levels as high as 10,000 ppmv and 500 ppmv, respectively, you may determine that it would be less expensive to use monitors with lower upper span levels (e.g., you may be able to use a single carbon monoxide CEMS to meet performance specifications for all three spans—the two lower spans required by Specification 4B, and a higher span (but less than 10,000)). You must still record, however, any one-minute average carbon monoxide or hydrocarbon levels that are at or above the span as 10,000 ppmv and 500 ppmv, respectively.

c. How Is the Oxygen Correction Factor Adjusted during Startup and Shutdown? You must identify in your Startup Shutdown, and Malfunction Plan a projected oxygen correction factor to use during periods of startup and shutdown. The projected oxygen correction factor should be based on normal operations. See § 63.1206(c)(2)(iii). The rule provides this requirement because the oxygen concentration in the combustor can exceed 15% during startup and shutdown, causing the correction factor to increase exponentially from the normal value. Such large correction factors result in corrected carbon

monoxide and hydrocarbon levels that are inappropriately inflated.

5. What Are the Operating Parameter Limits for Hydrochloric Acid/Chlorine Gas?

You must maintain compliance with the hydrochloric acid/chlorine gas emission standard by establishing and complying with limits on operating parameters. See § 63.1209(o). The following table summarizes these operating parameter limits. All sources must comply with the maximum chlorine feedrate limit. Other operating parameter limits apply depending on the type of hydrochloric acid/chlorine gas emission control device you use.

BILLING CODE 6560–50–P

Summary of Hydrochloric Acid/Chlorine Gas Monitoring Requirements

Control Technique	Compliance Using	Limits From	Averaging Period	How Limit Is Established
Limit on Maximum Chlorine Feedrate	Sampling and analysis of feedstreams[1] for chlorine (organic and inorganic) and a continuous monitoring system (CMS) for feedstream flowrate	Comprehensive performance test	12-hour	Avg of the average hourly rolling averages for each run
Wet Scrubber	CMS for maximum flue gas flowrate or kiln production rate	Comprehensive performance test	1-hour	Avg of the maximum hourly rolling averages for each run
	High energy scrubbers: CMS for minimum pressure drop across scrubber	Comprehensive performance test	1-hour	Avg of the test run averages
	Low energy scrubbers: CMS for minimum pressure drop across scrubber	Manufacturer specifications	1-hour	n/a
	Low energy scrubbers: CMS for minimum liquid feed pressure	Manufacturer specifications	1-hour	n/a
	CMS for minimum liquid pH	Comprehensive performance test	1-hour	Avg of the test run averages
	CMS for limit on minimum scrubber liquid flowrate and maximum flue gas flowrate or CMS for limit on minimum liquid/gas ratio	Comprehensive performance test	1-hour	Avg of the test run averages
Dry Scrubber[2]	CMS for minimum sorbent feedrate	Comprehensive performance test	1-hour	Avg of the test run averages
	CMS for minimum carrier fluid flowrate or nozzle pressure drop	Manufacturer specification	1-hour	n/a
	Identification of sorbent brand and type or adsorption properties	Comprehensive performance test	n/a	Same properties based on manufacturer's specifications

[1] This limit applies to all feedstreams, except natural gas, process air, and feedstreams from vapor recovery systems. See the discussion in Section VII.D.3 above in the text for the rationale for these exceptions.

[2] A CMS for gas flowrate or kiln production rate is also required with the same provisions as required for that compliance parameter for wet scrubbers.

BILLING CODE 6560–50–C

Hydrochloric acid/chlorine gas emissions from hazardous waste combustors are controlled by controlling the feedrate of total chlorine (organic and inorganic) and either wet or dry scrubbers. We discuss below the operating parameter limits that apply to each control technique.

a. Maximum Chlorine Feedrate Limit. As proposed, you must establish a limit on the maximum feedrate of chlorine, both organic and inorganic, from all feedstreams based on levels fed during the comprehensive performance test. Chlorine feedrate is an important emission control technique because the amount of chlorine fed into a combustor directly affects emissions of hydrochloric acid/chlorine gas. To establish and comply with the feedrate limit, you must sample and analyze, and continuously monitor the flowrate, of all feedstreams (including hazardous waste, raw materials, and other fuels and additives) except natural gas, process air, and feedstreams from vapor recovery systems for chlorine content.[244] Also as proposed, you must establish a maximum 12-hour rolling average feedrate limit based on operations during the comprehensive performance test as the average of the test run averages.

One commenter states that a chlorine feedrate is not necessary for cement kilns because cement kilns have an inherent incentive to control chlorine feedrates: to avoid operational problems such as the formation of material rings in the kiln or alkali-chloride condensation on the walls. Although we understand that cement kilns must monitor chlorine feedrates for operational reasons, several cement kilns in our data base emit levels of hydrochloric acid/chlorine gas at levels above today's emissions standard. We conclude, therefore, that the operational incentive to limit chlorine feedrates is not adequate to ensure compliance with the hydrochloric acid/chlorine gas emission standard.

b. Wet Scrubbers. If your combustor is equipped with a wet scrubber, you must establish, continuously monitor, and comply with limits on the following operating parameters:

i. Maximum Flue Gas Flowrate or Kiln Production Rate. As proposed, you must establish a limit on maximum flue gas flowrate or kiln production rate as a surrogate. See 61 FR at 17433. Gas flowrate is a key parameter affecting the control efficiency of a wet scrubber (and any emissions control device). As gas flowrate increases, control efficiency generally decreases unless other operating parameters are adjusted to accommodate the increased flowrate. Cement kilns and lightweight aggregate kilns may establish a limit on maximum production rate (e.g., raw material feedrate or clinker or aggregate production rate) in lieu of a maximum gas flowrate given that production rate directly relates to flue gas flowrate.

As proposed, you must establish a maximum gas flowrate or production rate limit as the average of the maximum hourly rolling averages for each run of the comprehensive performance test.

We did not receive adverse comment on this compliance parameter.

ii. Minimum Pressure Drop Across the Scrubber. You must establish a limit on minimum pressure drop across the scrubber. If your combustor is equipped with a high energy scrubber (e.g., venturi, calvert), you must establish an hourly rolling average limits based on operations during the comprehensive performance test. The hourly rolling average is established as the average of the test run averages.

If your combustor is equipped with a low energy scrubber (e.g., spray tower), you must establish a limit on minimum pressure drop based on the manufacturer's specification. You must comply with the limit on an hourly rolling average basis.

Pressure drop across a wet scrubber is an important operating parameter because it is an indicator of good mixing of the two fluids, the scrubber liquid and the flue gas. A low pressure drop indicates poor mixing and, hence, poor efficiency. A high pressure drop indicates good removal efficiency.

One commenter states that wet scrubber pressure drop is not an important parameter for packed-bed, low energy wet scrubbers. The commenter states that the performance of a packed-bed scrubber is based on good liquid-to-gas contacting. Thus, performance is dependent on packing design and scrubber fluid flow. In addition, the commenter states that scrubber liquid flow rate (and recirculation rate and make-up water flow rate) are adequate for assuring proper scrubber operation. We note that for many types of low energy wet scrubbers, pressure drop can be a rough indicator of scrubber liquid and flue gas contacting. Thus, although it is not a critical parameter, the minimum pressure drop of a low energy scrubber should still be monitored and complied with on a continuous basis.

Because pressure drop for a low energy scrubber (e.g., spray towers, packed beds, or tray towers) is not as important as for a high energy scrubber to maintain performance, however, the rule requires you to establish a limit on the minimum pressure drop for a low energy scrubber based on manufacturer specifications, rather than levels demonstrated during compliance testing. You must comply with this limit on an hourly rolling average basis. The pressure drop for high energy wet scrubbers, such as venturi or calvert scrubbers, however, is a key operating parameter to ensure the scrubber maintains performance. Accordingly, you must base the minimum pressure drop for these devices on levels achieved during the comprehensive test, and you must establish an hourly rolling average limit.

iii. Minimum Liquid Feed Pressure. You must establish a limit on minimum liquid feed pressure to a low energy scrubber. The limit must be based on manufacturer's specifications and you must comply with it on an hourly rolling average basis.

The rule requires a limit on liquid feed pressure because the removal efficiency of a low energy wet scrubber can be directly affected by the atomization efficiency of the scrubber. A drop in liquid feed pressure may be an indicator of poor atomization and poor scrubber removal efficiency. We are not requiring a limit on minimum liquid feed pressure for high energy scrubbers because liquid flow rate rather than feed pressure is the dominant operating parameter for high energy scrubbers.

We acknowledge, however, that not all wet scrubbers rely on atomization efficiency to maintain performance. If manufacturer's specifications indicate that atomization efficiency is not an important parameter that controls the efficiency of your scrubber, you may petition permitting officials under § 63.1209(g)(1) to waive this operating parameter limit.

iv. Minimum Liquid pH. You must establish dual ten-minute and hourly rolling average limits on minimum pH of the scrubber water based on operations during the comprehensive performance test. The hourly rolling average is established as the average of the test run averages.

The pH of the scrubber liquid is an important operating parameter because, at low pH, the scrubber solution is more acidic and removal efficiency of hydrochloric acid and chlorine gas decreases.

These requirements, except for the proposed ten-minute averaging period, are the same as we proposed. See 61 FR at 17433. We did not receive adverse comments.

[244] See discussion in Section VII.D.3 above in the text for the rationale for exempting these feedstreams for monitoring for chlorine content.

v. Minimum Scrubber Liquid Flowrate or Minimum Liquid/Gas Ratio. You must establish an hourly rolling average limits on either minimum scrubber liquid flowrate and maximum flue gas flowrate or minimum liquid/gas ratio based on operations during the comprehensive performance test. The hourly rolling average is established as the average of the test run averages.

Liquid flowrate and flue gas flowrate or liquid/gas ratio are important operating parameters because a high liquid-to-gas-flowrate ratio is indicative of good removal efficiency.

We had proposed to limit the liquid-to-gas ratio only. Commenters suggest that a limit on liquid-to-gas flow ratio would not be needed if the liquid flowrate and flue gas flowrate were limited instead. They reason that, because gas flowrate is already limited, limiting liquid flowrate as well would ensure that the liquid-to-gas ratio is maintained. We agree. During normal operations, the liquid flowrate can only be higher than levels during the performance test, and gas flowrate can only be lower than during the performance test. Thus, the numerator in the liquid flowrate/gas flowrate ratio could only be larger, and the denominator could only be smaller. Consequently, the liquid flowrate/gas flowrate during normal operations will always be higher than during the comprehensive performance test. Consequently, we agree that a limit on liquid-to-gas-ratio is not needed if you establish a limit on liquid flowrate and flue gas flowrate. Establishing limits on these parameters is adequate to ensure that the liquid flowrate/gas ratio is maintained.[245]

c. Dry Scrubbers. A dry scrubber removes hydrochloric acid from the flue gas by adsorbing the hydrochloric acid onto sorbent, normally an alkaline substance like limestone. As proposed, if your combustor is equipped with a dry scrubber, you must establish, continuously monitor, and comply with limits on the following operating parameters: Gas flowrate or kiln production rate; sorbent feedrate; carrier fluid flowrate or nozzle pressure drop; and sorbent specifications. See 61 FR at 17434.

i. Maximum Flue Gas Flowrate or Kiln Production Rate. As proposed, you must establish a limit on maximum flue gas flowrate or kiln production rate as a surrogate. The limit is established and monitored as discussed above for wet scrubbers.

ii. Minimum Sorbent Feedrate. You must establish an hourly rolling average limit on minimum sorbent feedrate based on feedrate levels during the comprehensive performance test. The hourly rolling average is established as the average of the test run averages.

Sorbent feedrate is important because, as more sorbent is fed into the dry scrubber, removal efficiency of hydrochloric acid and chlorine gas increases.[246] Conversely, lower sorbent feedrates tend to cause removal efficiency to decrease.

At proposal, we invited comment on whether a ten-minute rolling average is appropriate for sorbent feedrate (61 FR at 17434). We were concerned that some facilities may not automate their dry scrubbers to add sorbent solutions but instead add batches of virgin sorbent solution. Thus, we were concerned that a ten-minute rolling average may not be practicable in all cases. Some commenters are concerned that a ten-minute limit would be difficult to measure, especially in the case of batch addition of sorbent. Nonetheless, we have determined upon reanalysis that sorbent is not injected into the flue gas in "batches." Although sorbent may be added in batches to storage or mixing vessels, it must be injected into the flue gas continuously to provide continuous and effective removal of acid gases. Thus, ten-minute rolling average limits would be practicable and appropriate for sorbent injection feedrates if ten-minute averages were required in this final rule.[247] However, as discussed in Part Five, Section VII.B, we have decided to not require ten-minute averaging periods on a national basis. Permitting officials may, however, determine that shorter averaging periods are needed to better assure compliance with the emission standard.

iii. Minimum Carrier Fluid Flowrate or Nozzle Pressure Drop. A carrier fluid, normally air or water, is necessary to transport and inject the sorbent into the gas stream. As proposed, you must establish and continuously monitor a limit on either minimum carrier gas or water flowrate or pressure drop across the nozzle to ensure that the flow and dispersion of the injected sorbent into the flue gas stream is maintained. You must base the limit on manufacturer's specifications, and comply with the limit on a one-hour rolling average basis.

Without proper carrier flow to the dry scrubber, the sorbent flow into the scrubber will decrease causing the efficiency to decrease. Nozzle pressure drop is also an indicator of carrier gas flow into the scrubber. At higher pressure drops, more sorbent is carried to the dry scrubber.

iv. Identification of Sorbent Brand and Type or Adsorption Properties. You must either identify the sorbent brand and type used during the comprehensive performance test and continue using that sorbent, or identify the adsorption properties of that sorbent and use a sorbent having equivalent or better properties. This will ensure that the sorbent's adsorption properties are maintained.

We proposed to require sources to continue to use the same sorbent brand and type as they used during the comprehensive performance test or obtain a waiver from this requirement from the Administrator. See 61 FR at 17434. As discussed above in the context of specifying the brand of carbon used in carbon injection systems to control dioxin/furan, we have determined that sources should have the option of using manufacturer's specifications to specify the sorption properties of the sorbent used during the comprehensive performance test. You may use sorbent of other brands or types provided that it has equivalent or better sorption properties. You must include in the operating record written documentation that the substitute sorbent will provide the same level of control as the original sorbent.

6. What Are the Operating Parameter Limits for Particulate Matter?

You must maintain compliance with the particulate matter emission standard by establishing and complying with limits on operating parameters. See § 63.1209(m). The following table summarizes these operating parameter limits. All incinerators must comply with the limit on maximum ash feedrate. Other operating parameter limits apply depending on the type of particulate matter control device you use.

BILLING CODE 6560–50–P

[245] In fact, complying with limits on liquid flowrate and gas flowrate, rather than complying with a liquid flowrate/gas flowrate ratio, is a more conservative approach to ensure that the performance test ratio is maintained (at a minimum). Thus, we prefer that you establish a limit on liquid flowrate (in conjunction with the limit gas flowrate) in lieu of a limit on the ratio.

[246] We note that sorbent should be fed to a dry scrubber in excess of the stoichiometric requirements for neutralizing the anion component in the flue gas. Lower levels of sorbent, even above stoichiometric requirements, would limit the removal of acid gasses.

[247] We note that flowrate measurement devices are available for ten-minute average times (e.g., those based on volumetric screw feeders which provide instantaneous measurements).

Summary of Particulate Matter Monitoring Requirements

Control Technique	Compliance Using	Limits From	Averaging Period	How Limit Is Established
For Incinerators, Limit on Maximum Ash Feedrate	Sampling and analysis of feedstreams for ash and a continuous monitoring system (CMS) for feedstream flowrate	Comprehensive performance test	12-hour	Avg of the average hourly rolling averages for each run.
Wet Scrubber: High Energy and Ionizing Scrubbers	CMS for maximum flue gas flowrate or kiln production rate	Comprehensive performance test	1-hour	Avg of the maximum hourly rolling averages for each run
	For high energy wet scrubbers only, CMS for minimum pressure drop across scrubber	Comprehensive performance test	1-hour	Avg of the test run averages
	For high energy wet scrubbers only, CMS for limit on minimum scrubber liquid flowrate and maximum flue gas flowrate or CMS for limit on minimum liquid/gas ratio	Comprehensive performance test	1-hour	Avg of the test run averages
All Wet Scrubbers	CMS for limit on minimum blowdown rate plus a CMS for either minimum scrubber tank volume or level, or	Comprehensive performance test	1-hour	Avg of the test run averages
	CMS for solids content of scrubber water, or	Comprehensive performance test	12-hour	Avg of the test run averages
	Manual sampling for solids content of scrubber water[1]	Comprehensive performance test	1-hour	Avg of manual sampling run averages
Fabric Filter[2]	CMS for minimum pressure drop and maximum pressure drop across each cell	Manufacturer's specifications	1-hour	n/a
Electrostatic Precipitator and Ionizing Wet Scrubber[2]	CMS for secondary voltage and current to each field to monitor limits on minimum power input (kVA)	Comprehensive performance test	1-hour	Avg of the test run averages

[1] Unless you elect to comply with a default sampling/analysis frequency for solids content of the scrubber water of once per hour, you must recommend an alternative frequency in the comprehensive performance test plan that you submit for review and approval.

[2] A CMS for gas flowrate or kiln production rate is also required with the same provisions as required for those parameters for wet scrubbers.

BILLING CODE 6560–50–C

Particulate matter emissions from hazardous waste combustors are controlled by controlling the feedrate of ash to incinerators and using a particulate matter control device. We discuss below the operating parameter limits that apply to each control technique.

a. Maximum Ash Feedrate. As proposed, if you own or operate an incinerator, you must establish a limit on the maximum feedrate of ash from all feedstreams based on the levels fed during the comprehensive performance test. To establish and comply with the feedrate limit, you must sample and analyze, and continuously monitor the flowrate of all feedstreams (including hazardous waste, and other fuels and additives) except natural gas, process air, and feedstreams from vapor recovery systems for ash content.[24*] Also as proposed, you must establish a maximum 12-hour rolling average feedrate limit based on operations during the comprehensive performance test as the average of the test run averages. See 61 FR at 17438.

Ash feedrate for incinerators is an important particulate matter control parameter because ash feedrates can relate directly to emissions of particulate matter (i.e., ash contributes to particulate matter in flue gas). We are not requiring an ash feedrate limit for cement or lightweight aggregate kilns because particulate matter from those combustors is dominated by raw materials entrained in the flue gas. The contribution to particulate matter of ash from hazardous waste or other feedstreams is not significant. We discussed this issue at proposal.

A commenter states that ash feedrate limits are not needed for combustors using fabric filters, suggesting that fabric filter pressure drop and opacity monitoring are sufficient for compliance assurance. We discuss previously in this section (i.e., Part Five, Section VII) our concern that neither opacity monitors, nor limits on control device operating parameter, nor limits on the feedrates of constituents that can contribute directly to emissions of hazardous air pollutants comprise an ideal compliance assurance regime. We would prefer the use of a particulate matter CEMS for compliance assurance but cannot achieve that goal at this time. Absent the use of a CEMS and given the limitations of the individual compliance tools currently available, we are reluctant to forgo on a national, generic basis requiring limits on an operating parameter such as ash feedrate that we know can relate directly to particulate emissions. However, you may petition permitting officials under § 63.1209(g)(1) for approval to waive the ash feedrate limit based on data or information documenting that pressure drop across the fabric filter coupled with an opacity monitor would provide equivalent or better compliance assurance than a limit on ash feedrate.

b. Wet Scrubbers. As proposed, if your combustor is equipped with a wet scrubber, you must establish, continuously monitor, and comply with limits on the operating parameters discussed below. High energy wet scrubbers (e.g., venturi, calvert) remove particulate matter by capturing particles in liquid droplets and separating the droplets from the gas stream. Ionizing wet scrubbers use both an electrical charge and wet scrubbing to remove particulate matter. Low energy wet scrubbers that are not ionizing wet scrubbers (e.g., packed bed, spray tower) are only subject to the scrubber water solids content operating parameter requirements for particulate matter control because they are primarily used to control emissions of acid gases and only provide incidental particulate matter control.

i. Maximum Flue Gas Flowrate or Kiln Production Rate. For high energy and ionic wet scrubbers, you must establish a limit on maximum flue gas flowrate or kiln production rate as a surrogate. See 61 FR at 17438. Gas flowrate is a key parameter affecting the control efficiency of a wet scrubber (and any emissions control device). As gas flowrate increases, control efficiency generally decreases unless other operating parameters are adjusted to accommodate the increased flowrate. Cement kilns and lightweight aggregate kilns may establish a limit on maximum production rate (e.g., raw material feedrate or clinker or aggregate production rate) in lieu of a maximum gas flowrate given that production rate directly relates to flue gas flowrate.

As proposed, you must establish a maximum gas flowrate or production rate limit as the average of the maximum hourly rolling averages for each run of the comprehensive performance test.

ii. Minimum Pressure Drop Across the Scrubber. For high energy scrubbers only, you must establish an hourly rolling average limits on minimum pressure drop across the scrubber based on operations during the comprehensive performance test. The hourly rolling average is established as the average of the test run averages. See the discussion in Section VII.D.5.b above for a discussion on the approach for calculating limits from comprehensive performance test data.

iii. Minimum Scrubber Liquid Flowrate or Minimum Liquid/Gas Ratio. For high energy wet scrubbers, you must establish an hourly rolling average limits on either minimum scrubber liquid flowrate and maximum flue gas flowrate or minimum liquid/gas ratio based on operations during the comprehensive performance test. The hourly rolling average is established as the average of the test run averages. See the discussion in Section VII.D.5.b above for a discussion on the approach for calculating limits from comprehensive performance test data.

iv. Maximum Solids Content of Scrubber Water or Minimum Blowdown Rate Plus Minimum Scrubber Tank Volume or Level. For all wet scrubbers, to maintain the solids content of the scrubber water to levels no higher than during the comprehensive performance test, you must establish a limit on either: (1) Maximum solids content of the scrubber water; or (2) minimum blowdown rate plus minimum scrubber tank volume or level. If you elect to establish a limit on maximum solids content of the scrubber water, you must comply with the limit either by: (1) Continuously monitoring the solids content and establishing 12-hour rolling average limits based on solids content during the comprehensive performance test; or (2) periodic manual sampling and analysis of scrubber water for solids content. Under option 1, the 12-hour rolling average is established as the average of the test run averages. Under option 2, you must either comply with a default sampling and analysis frequency for scrubber water solids content of once per hour or recommend an alternative frequency in your comprehensive performance test plan that you submit for review and approval.

Solids content in the scrubber water is an important operating parameter because as the solids content increases, particulate emissions increase. This is attributable to evaporation of scrubber water and release of previously captured particulate back into the flue gas. Blowdown is the amount of scrubber liquid removed from the process and not recycled back into the wet scrubber. As scrubber liquid is removed and not recycled, solids are removed. Thus, blowdown is an operating parameter that affects solids content and can be used as a surrogate for measuring solids content directly. See 61 FR 17438.

The proposed rule would have required continuously monitored limits on either minimum blowdown or a

[24*] See discussion in Section VII.D.3 above in the text for the rationale for exempting these feedstreams from monitoring for ash content.

maximum solids content. In response to comments and upon reanalysis of the issues, we conclude that we need to make two revisions to these requirements. First, we are concerned that it may be problematic to continuously monitor the solids content of scrubber water. Consequently, we revised the requirements to allow manual sampling and analysis on an hourly basis, unless you justify an alternative frequency. Second, we are concerned that a limit on blowdown rate without an associated limit on either minimum scrubber water tank volume or level would not be adequate to provide control of solids content. The solids concentration in blowdown tanks could be higher at lower water levels. Therefore, water levels need to be at least equivalent to the levels during the comprehensive performance test. This should not be a significant additional burden. Sources should be monitoring the water level in the scrubber water tank as a measure of good operating practices. Consequently, we revise the requirement to require a minimum tank volume or level in conjunction with a minimum blowdown rate for sources that elect to use that compliance option.

c. Fabric Filter. If your combustor is equipped with a fabric filter, you must establish, continuously monitor, and comply with limits on the operating parameters discussed below.

i. Maximum Flue Gas Flowrate or Kiln Production Rate. As proposed, you must establish a limit on maximum flue gas flowrate or kiln production rate as a surrogate. Gas flowrate is a key parameter affecting the control efficiency of a fabric filter (and any emissions control device). As gas flowrate increases, control efficiency generally decreases unless other operating parameters are adjusted to accommodate the increased flowrate. Cement kilns and lightweight aggregate kilns may establish a limit on maximum production rate (e.g., raw material feedrate or clinker or aggregate production rate) in lieu of a maximum gas flowrate given that production rate directly relates to flue gas flowrate.

As proposed, you must establish a maximum gas flowrate or production rate limit as the average of the maximum hourly rolling averages for each run of the comprehensive performance test.

ii. Minimum Pressure Drop and Maximum Pressure Drop Across the Fabric Filter. You must establish a limit on minimum pressure drop and maximum pressure drop across each cell of the fabric filter based on manufacturer's specifications.

Filter failure is typically due to filter holes, bleed-through migration of particulate through the filter and cake, and small "pin holes" in the filter and cake. Because low pressure drop is an indicator of one of these types of failure, pressure drop across the fabric filter is an indicator of fabric filter failure.

We had proposed to establish limits on minimum pressure drop based on the performance test. Commenters indicate, however, that maintaining a pressure drop not less than levels during the performance test will not ensure baghouse performance. We concur. The pressure change caused by fabric holes may not be measurable, especially at large sources with multiple chamber filter housing units that operate in parallel. In addition, operating at high pressure drop may not be desirable because high pressures can create pin holes.

Nonetheless, establishing a limit on minimum pressure drop based on manufacturer's recommendations, as suggested by a commenter, is a reasonable and prudent approach to help ensure fabric filter performance. We have since determined that an operating parameter limit for maximum pressure drop across each cell of the fabric filter, based on manufacturer specifications, is also necessary. As discussed above, a high pressure drop in a cell of a fabric filter may cause small pinholes to form or may be indicative of bag blinding or plugging, which could result in increased particulate emissions. We do not consider this additional provision to be burdensome, especially because both the maximum and minimum pressure drop limits are based on manufacturer specifications on an hourly rolling average. These pressure drop monitoring requirements, in combination with COMS for cement kilns and bag leak detection systems for incinerators and lightweight aggregate kilns, provide a significant measure of assurance that control performance is maintained.

d. Electrostatic Precipitators and Ionizing Wet Scrubbers. As proposed, if your combustor is equipped with an electrostatic precipitator or ionizing wet scrubber, you must establish, continuously monitor, and comply with limits on the operating parameters discussed below.

i. Maximum Flue Gas Flowrate or Kiln Production Rate. You must establish a limit on maximum flue gas flowrate or kiln production rate as a surrogate. Gas flowrate is a key parameter affecting the control efficiency of an emissions control device. As gas flowrate increases, control efficiency generally decreases unless other operating parameters are adjusted to accommodate the increased flowrate. Cement kilns and lightweight aggregate kilns may establish a limit on maximum production rate (e.g., raw material feedrate or clinker or aggregate production rate) in lieu of a maximum gas flowrate given that production rate directly relates to flue gas flowrate.

As proposed, you must establish a maximum gas flowrate or production rate limit as the average of the maximum hourly rolling averages for each run of the comprehensive performance test.

ii. Minimum Secondary Power Input to Each Field. You must establish an hourly rolling average limit on minimum secondary power (kVA) input to each field of the electrostatic precipitator or ionizing wet scrubber based on operations during the comprehensive performance test. The hourly rolling average is established as the average of the test run averages.

Electrostatic precipitators capture particulate matter by charging the particulate in an electric field and collecting the charged particulate on an inversely charged collection plate. Higher voltages improve magnetic field strength, resulting in charged particle migration to the collection plate. High current leads to an increased particle charging rate and increased electric field strength near the collection electrode, increasing collection at the plate, as well. Therefore, maximizing both voltage and current by specifying minimum power input to the electrostatic precipitator is desirable for good particulate matter collection in electrostatic precipitators. For these reasons, the rule requires you to monitor power input to each field of the electrostatic precipitator to ensure that collection efficiency is maintained at performance test levels.

Power input to an ionizing wet scrubber is important because it directly affects particulate removal. Ionizing wet scrubbers charge the particulate prior to it entering a packed bed wet scrubber. The charging aids in the collection of the particulate onto the packing surface in the bed. The particulate is then washed off the packing by the scrubber liquid. Therefore, power input is a key parameter to proper operation of an ionizing wet scrubber.

One commenter suggests that a minimum limit on electrostatic precipitator voltage be used instead of power input because, at low particulate matter loadings, operation at maximum power input is inefficient. Another commenter suggests that neither a limit on voltage or power input is appropriate because a minimum limit would

actually cause a potential decrease in operational efficiency (required power input and voltage are strong functions of gas and particulate characteristics, electrostatic precipitator arcing and sparking at high voltage and power requirements, etc.). Alternatively, they recommend that a limit on the minimum number of energized electrostatic precipitator fields be established. We continue to maintain that a minimum limit on power input to each field of the electrostatic precipitator is generally accepted as an appropriate parameter for assuring electrostatic precipitator performance. Consequently, it is an appropriate parameter for a generic, national standard. If you believe, however, that in your situation limits on alternative operating parameters may better assure that control performance is maintained you may request approval to use alternative monitoring approaches under § 63.1209(1).

Another commenter suggests that, in addition to a minimum power input for an ionizing wet scrubber, a limit should be set on the maximum time allowable to be below the minimum voltage. While feasible, we conclude that this limit is not necessary on a national basis because the one hour rolling average requirement limits the amount of time a source can operate below its minimum voltage limit. We acknowledge, however, that a permit writer may find it necessary to require shorter averaging periods (e.g., ten-minute or instantaneous limits) to better control the amount of time a source can operate at levels below its limit.

7. What Are the Operating Parameter Limits for Destruction and Removal Efficiency?

You must establish, monitor, and comply with the same operating parameter limits to ensure compliance with the destruction and removal efficiency (DRE) standard as you establish to ensure good combustion practices are maintained for compliance with the dioxin/furan emission standard. See § 63.1209(j) and the discussion in Section VII.D.1 above. This is because compliance with the DRE standard is ensured by maintaining combustion efficiency using good combustion practices. Thus, the DRE operating parameters are: maximum waste feedrate for pumpable and nonpumpable wastes, minimum gas temperature for each combustion chamber, maximum gas flowrate or kiln production rate, and parameters that you recommend to ensure the operations of each hazardous waste firing system are maintained.[249]

VIII. Which Methods Should Be Used for Manual Stack Tests and Feedstream Sampling and Analysis?

This part discusses the manual stack test and the feedstream sampling and analysis methods required by today's rule.

A. Manual Stack Sampling Test Methods

To demonstrate compliance with today's rule, you must use: (1) Method 0023A for dioxin and furans; (2) Method 29 for mercury, semivolatile metals, and low volatile metals; (3) Method 26A for hydrochloric acid and chlorine; and (4) Method 5 or 5i for particulate matter. These methods are found at 40 CFR part 60, appendix A, and in "Test Methods for Evaluating Solid Waste, Physical/Chemical Methods," EPA publication.

In the NPRM, we proposed that BIF manual stack test methods currently located in SW-846 be required to demonstrate compliance with the proposed standards. Based on public comments from the proposal, in the December 1997 NODA we considered simply citing the "Air Methods" found in appendix A to part 60. Our rationale was that facilities may be required to perform two identical tests, one from SW-846 for compliance with MACT or RCRA and one from part 60, appendix A, for compliance with other air rules using identical test methods simply because one method is an SW-846 method and the other an Air Method. See 62 FR at 67803. To facilitate compliance with all air emissions stack tests, we stated that we would list the methods found in 40 CFR part 60, appendix A, as the stack test methods used to comply with the standards. Later in this section we present an exception for dioxin and furan testing.

In today's rule, we adopt the approach of the December 1997 NODA and require that the test methods found in 40 CFR part 60, appendix A be used to demonstrate compliance with the emission standards of today's rule, except for dioxin and furan. Specifically, today's rule requires you to use Method 0023A in SW-846 for sampling dioxins and furans from stack emissions. As noted by commenters, improvements have been made to the dioxin and furan Method 0023A in the Third Update of SW-846 that have been previously incorporated into today's regulations. See the 40 CFR 63.1208(a), incorporation of SW-846 by reference. However, these have not yet been incorporated into 40 CFR part 60, Appendix A. To capture these improvements to the method, today's rule incorporates by reference SW-846 Method 0023A. We have evaluated both methods. Use of the improved Method 0023A will not affect the achievability of the dioxin and furan standard.

In the proposal, we sought comment on the handling of nondetect values for congeners analyzed using the dioxin and furan method. We also sought comment on whether the final rule should specify minimum sampling times. We proposed allowing facilities to assume that emissions of dioxins and furans congeners are zero if the analysis showed a nondetect for that congener and the sample time for the test method run was at least 3 hours. See 61 FR 17378. Dioxin/furan results may not be blank corrected. We received several comments this proposed approach, which are summarized below.

One commenter believes that a minimum dioxin/furan sampling time of two hours is sufficient. Another commenter believes that a minimum sample time as well as a minimum sample volume should be specified. Several commenters agree that nondetects should be treated as zero (which is consistent with the German standard) and prefer the three hour minimum sample period because this would help eliminate intra-laboratory differences and difficulties with matrix effects in attaining low detection limits. One commenter believes that EPA should specify the required detection limit for each congener analysis, otherwise the provision to assign zeroes to nondetected congeners in the TEQ calculation is open to abuse and could result in an understatement of the true dioxin/furan emissions. This commenter also believes that a source should not be allowed to sample dioxin/furans for time periods less than three hours, even if they assume nondetects are present at the detection limit.

Upon carefully considering all the above comments, we conclude that the following approach best addresses the nondetect issue. The final rule requires all sources to sample dioxin/furans for a minimum of three hours for each run,

[249] You are required to establish operating requirements only for hazardous waste firing systems because of DRE standard applies only to hazardous waste. Permitting officials may determine on a site-specific basis under authority of § 63.1209(g)(2), however, that combustion of other fuels or wastes may affect your ability to maintain DRE for hazardous waste. Accordingly, permitting officials may define operating requirements for other (i.e., other than hazardous waste) waste or fuel firing systems. Permitting officials may also determine under that provision on a site-specific basis that operating requirements other than those prescribed for DRE (and good combustion practices) may be needed to ensure compliance with the DRE standard.

and requires all sources to collect a flue gas sample of at least 2.5 dscm. We conclude both these requirements are necessary to maintain consistency from source to source, and to better assure that the dioxin/furan emission results are accurate and representative. We conclude that these two requirements are achievable and appropriate [250]. These requirements are consistent with the requirements included in the proposed Portland Cement Kiln MACT rule (see 64 FR at 31898). The final rule also allows a source to assume all nondetected congeners are not present in the emissions when calculating TEQ values for compliance purposes.

We considered whether it would be appropriate to specify required minimum detection limits for each congener analysis in order to better assure that sources achieved reasonable detection limits, as one commenter recommended. Such a requirement would prevent abuse and understatements of the true dioxin/furan emissions. We conclude, however, that it is not appropriate to finalize minimum detection limits in this rulemaking without giving the opportunity to all interested parties to review and comment on such an approach.

However, we are concerned that (1) sources have no incentive to achieve low detection limits; and (2) sources may abuse the provision that allows nondetected congener results to be treated as if they were not present. As explained in the Final Technical Support Document referenced in the preceding paragraph, if one assumes that all dioxin/furan congeners are present at what we consider to be poor detection limits using Method 23A, the resultant TEQ can approach the emission standard. This outcome is clearly inappropriate from a compliance perspective.

As a result, we highly recommend that this issue be addressed in the review process of the performance test workplan. Facilities should submit information that describes the target detection limits for all congeners, and calculate a dioxin/furan TEQ concentration assuming all congeners are present at the detection limit (similar to what is done for risk assessments). If this value is close to the emission standard, both the source and the regulatory official should determine if it is appropriate to either sample for longer time periods or investigate whether it is possible to achieve lower detection limits by using different analytical procedures that are approved by the Agency.

Also, EPA has developed analytical standards for certain mono-through tri-chloro dioxin and furan congeners. We encourage you to test for these congeners in addition to the congeners that comprise today's standards. This can be done at very little increased cost. If you test for these additional congeners, please include the results in your Notification of Compliance. We would like this data so we can develop a database from which to determine which (if any) of these compounds can act as surrogate(s) for the dioxin and furan congeners which comprise the total and TEQ. If easily measurable surrogate(s) can be found, we can then start the development of a CEMS for these surrogates. A complete list of these congeners will be included in the implementation document for this rule and updated periodically through guidance.

One commenter suggests that a source be allowed to conduct one extended dioxin/furan sampling event as opposed to three separate runs with three separate sampling trains because this would minimize the radioactive waste generated for sources that combust mixed waste. We conclude this issue should be handled on a site-specific basis, although an allowance of such an approach seems reasonable. A source can petition the Agency under the provisions of § 63.7(f) for an alternative test method for such a site-specific determination.

The final rule also adopts the approach discussed in the December 1997 NODA for sampling of mercury, semi-volatile metals, and low-volatile metals. Therefore, for stack sampling of mercury, semi-volatile metals, and low-volatile metals, you are required to use Method 29 in 40 CFR part 60, appendix A. No adverse comments were received concerning this approach in the December 1997 NODA.

For compliance with the hydrochloric acid and chlorine standards, today's rule requires that you use Method 26A in 40 CFR part 60, appendix A. Commenters state that we should instead require a method involving the Fourier Transform Infrared and Gas Filter Correlation Infrared instrumental techniques. Commenters contend that Method 26A is biased high at cement kilns because it collects ammonium chloride in addition to the hydrochloric acid and chlorine gas emissions it was designed to report. Commenters also indicate that the Fourier Transform Infrared and Gas Filter Correlation Infrared were validated against Method 26A and that these alternative methods do not bias the results high due to ammonium chloride [251]. The data for today's hydrochloric acid standard was derived using the SW-846 equivalent to Method 26A (Method 0050) as the reference method. Therefore, today's standard accounts for the ammonium chloride collection bias. We reject the idea that we should require other methods. If the commenters are correct, other methods would not sample the ammonium chloride portion, thus making the standard less stringent. You can obtain Administrator approval for using Fourier Transform Infrared or Gas Filter Correlation Infrared techniques following the provisions found in 40 CFR 63.7 if those methods are found to pass a part 63, appendix A, Method 301 validation at the source.

Compliance with the particulate matter standards requires the use of either Method 5 or Method 5i in 40 CFR part 60, appendix A. See a related discussion of Method 5i in Part 5, section VII.C.2.a of the preamble to today's rule. Although Method 5i has better precision than Method 5, your choice of methods depends on the emissions during the performance test. In cases of low levels of particulate matter (*i.e.*, for total train catches of less than 50 mg), we prefer that Method 5i be used. For higher emissions, Method 5 may be used [252]. In practice this will likely mean that all incinerators and most lightweight aggregate kilns will use Method 5i for compliance, while some lightweight aggregate kilns and most cement kilns will use Method 5.

Today's rule also allows the use of any applicable SW-846 test methods to demonstrate compliance with requirements of this subpart. As an example, some commenters noted a preference to perform particulate matter and hydrochloric acid tests together using Method 0050. Today's rule would allow that practice. Applicable SW-846 test methods are incorporated for use into today's rule via reference. See section 1208(a).

B. Sampling and Analysis of Feedstreams

Today's rule does not require the use of SW-846 methods for the sampling and analysis of feedstreams. Consistent with our approach to move toward performance based measurement

[250] See Final Technical Support Document, Volume IV, Chapter 3, for further discussion.

[251] After further review and consideration of the GFCIR Method (322), we will not be promulgating its use in the Portland Cement Kiln NESHAP rulemaking due to problems encountered with the method during emission testing at lime manufacturing plants.

[252] We note that this total train catch is *not* intended to be a data acceptance criteria. Thus, total train catches exceeding 50 mg *do not* invalidate the method.

systems for other than method-defined parameters,[253] today's rule allows the use of any reliable analytical method to determine feedstream concentrations of metals, halogens, and other constituents. It is your responsibility to ensure that the sampling and analysis are unbiased, precise, and representative of the waste. For the waste, you must demonstrate that: (1) Each constituent of concern is not present above the specification level at the 80% upper confidence limit around the mean; and (2) the analysis could have detected the presence of the constituent at or below the specification level at the 80% upper confidence limit around the mean. You can refer to the Guidance for Data Quality Assessment—Practical Methods for Data Analysis, EPA QA/G-9, January 1998, EPA/600/R-96/084 for more information. Proper selection of an appropriate analytical method and analytical conditions (as allowed by the scope of that method) are demonstrated by adequate recovery of spiked analytes (or surrogate analytes) and reproducible results. Quality control data obtained must also reflect consistency with the data quality objectives and intent of the analysis. You can read the January 31, 1996, memorandum from Barnes Johnson, Director of the Economics, Methods, and Risk Assessment Division, to James Berlow, Director of the Hazardous Waste Minimization and Management Division for more information on this topic.

IX. What Are the Reporting and Recordkeeping Requirements?

We discuss in this section reporting and recordkeeping requirements and a provision in the rule for allowing data compression to reduce the recordkeeping burden.

A. What Are the Reporting Requirements?

The reporting requirements of the rule include notifications and reports that must be submitted to the Administrator as well as notifications, requests, petitions, and applications that you must submit to the Administrator only if you elect to request approval to comply with certain reduced or alternative requirements. These reporting requirements are summarized in the following tables. We discuss previously in various sections of today's preamble the rationale for additional or revised reporting requirements to those currently required under subpart A of part 63 for all MACT sources. In other cases, the reporting requirements for hazardous waste combustors are the same as for other MACT sources (e.g., initial notification under existing § 63.9(b). We also show in the tables the reference(s) in the regulations for the reporting requirement.

SUMMARY OF NOTIFICATIONS THAT YOU MUST SUBMIT TO THE ADMINISTRATOR

Reference	Notification
63.9(b)	Initial notifications that you are subject to Subpart EEE.
63.1210(b) and (c).	Notification of intent to comply.
63.9(d)	Notification that you are subject to special compliance requirements.
63.1207(e), 63.9(e) 63.9(g) (1) and (3).	Notification of performance test and continuous monitoring system evaluation, including the performance test plan and CMS performance evaluation plan.
163.1210(d), 63.1207(j), 63.9(h), 63.10(d)(2), 63.10(e)(2).	Notification of compliance, including results of performance tests and continuous monitoring system performance evaluations.
63.1206(b)(6)	Notification of changes in design, operation, or maintenance.
63.9(j)	Notification and documentation of any change in information already provided under § 63.9.

[1] You may also be required on a case-by-case basis to submit a feedstream analysis plan under § 63.1209(c)(3).

SUMMARY OF REPORTS THAT YOU MUST SUBMIT TO THE ADMINISTRATOR

Reference	Report
63.1211(b)	Compliance progress report associated and submitted with the notification of intent to comply.
63.10(d)(4)	Compliance progress reports, if required as a condition of an extension of the compliance date granted under § 63.6(i).
63.1206(c)(3)(vi)	Excessive exceedances reports.
63.1206(c)(4)(iv)	Emergency safety vent opening reports.
63.10(d)(5)(i)	Periodic startup, shutdown, and malfunction reports.
63.10(d)(5)(ii)	Immediate startup, shutdown, and malfunction reports.
63.10(e)(3)	Excessive emissions and continuous monitoring system performance report and summary report.

SUMMARY OF NOTIFICATIONS, REQUESTS, PETITIONS, AND APPLICATIONS THAT YOU MUST SUBMIT TO THE ADMINISTRATOR ONLY IF YOU ELECT TO COMPLY WITH REDUCED OR ALTERNATIVE REQUIREMENTS

Reference	Notification, request, petition, or application
63.1206(b)(5), 63.1213, 63.6(i), 63.9(c)	You may request an extension of the compliance date for up to one year.
63.9(i)	You may request an adjustment to time periods or postmark deadlines for submittal and review of required information.
63.1209(g)(1)	You may request approval of: (1) alternative monitoring methods, except for standards that you must monitor with a continuous emission monitoring system (CEMS) and except for requests to use a CEMS in lieu of operating parameter limits; or (2) a waiver of an operating parameter limit.
63.1209(a)(5), 63.8(f)	You may request: (1) approval of alternative monitoring methods for compliance with standards that are monitored with a CEMS; and (2) approval to use a CEMS in lieu of operating parameter limits.

[253] Feedstream sampling and analysis are not method defined parameters.

SUMMARY OF NOTIFICATIONS, REQUESTS, PETITIONS, AND APPLICATIONS THAT YOU MUST SUBMIT TO THE ADMINISTRATOR ONLY IF YOU ELECT TO COMPLY WITH REDUCED OR ALTERNATIVE REQUIREMENTS—Continued

Reference	Notification, request, petition, or application
63.1204(d)(4)	Notification that you elect to comply with the emission averaging requirements for cement kilns with in-line raw mills.
63.1204(e)(4)	Notification that you elect to comply with the emission averaging requirements for preheater or preheater/precalciner kilns with dual stacks.
63.1206(b)(1)(ii)(A)	Notification that you elect to document compliance with all applicable requirements and standards promulgated under authority of the Clean Air Act, including Sections 112 and 129, in lieu of the requirements of Subpart EEE when not burning hazardous waste.
63.1206(b)(9)(iii)(B)	If you elect to conduct particulate matter CEMS correlation testing and wish to have federal particulate matter and opacity standards and associated operating limits waived during the testing, you must notify the Administrator by submitting the correlation test plan for review and approval.
63.1206(b)(10)	Owners and operators of lightweight aggregate kilns may request approval of alternative emission standards for mercury, semivolatile metal, low volatile metal, and hydrochloric acid/chlorine gas under certain conditions.
63.1206(b)(11)	Owners and operators of cement kilns may request approval of alternative emission standards for mercury, semivolatile metal, low volatile metal, and hydrochloric acid/chlorine gas under certain conditions.
63.1207(c)(2)	You may request to base initial compliance on data in lieu of a comprehensive performance test.
63.1207(i)	You may request up to a one-year time extension for conducting a performance test (other than the initial comprehensive performance test) to consolidate testing with other state or federally-required testing.
63.1209(l)(1)	You may request to extrapolate mercury feedrate limits.
63.1209(n)(2)(ii)	You may request to extrapolate semivolatile and low volatile metal feedrate limits.
63.10(e)(3)(ii)	You may request to reduce the frequency of excess emissions and CMS performance reports.
63.10(f)	You may request to waive recordkeeping or reporting requirements.
63.1211(e)	You may request to use data compression techniques to record data on a less frequent basis than required by § 63.1209.

Some commenters suggest that the rule needs to provide additional reporting of information regarding metals fed to cement kilns, including quarterly reporting of daily average metal feedrates, maximum hourly feedrates, and all testing and analytical information on the toxic metal content of cement kiln dust and clinker product. Also, they suggest that toxic metals that are Toxics Release Inventory pollutants and that are released to the land from cement kiln dust disposal should be reported. While these reports might have some value for other purposes, we must carefully scrutinize all reporting and recordkeeping burdens for a rulemaking and determine whether the reporting and recordkeeping requirements are necessary to ensure compliance with the standards. (We, as an agency, cannot increase overall our reporting and recordkeeping burden.)

We do not believe that these reports are needed to ensure compliance with the standards and therefore are not requiring them. On balance, quarterly filing requirements would be too burdensome. A source must document compliance with all operating parameter limits and emission standards at all times, and its records are subject to inspection at any time. There is no additional need to provide quarterly reports.

One commenter suggests that the proposed rule incorrectly focuses on maximizing data collection as opposed to ensuring performance, thus frustrating the use of better technology and methods. We, of course, are also interested in ensuring performance by all reasonable means, which for example accounts for our continued focus on continuous emission monitors. However, we are not able to sacrifice data collection as a means for ensuring compliance as well as a means to undergird future rulemakings, assess achievability, and determine site-specific compliance limits, where necessary.

B. What Are the Recordkeeping Requirements?

You must keep the records summarized in the table below for at least five years from the date of each occurrence, measurement, maintenance, corrective action, report, or record. See existing § 63.10(b)(1). At a minimum, you must retain the most recent two years of data on site. You may retain the remaining three years of data off site. You may maintain such files on: microfilm, a computer, computer floppy disks, optical disk, magnetic tape, or microfiche.

We discuss previously in various sections of today's preamble the rationale for additional or revised recordkeeping requirements to those currently required under subpart A of part 63 for all MACT sources. In other cases, the recordkeeping requirements for hazardous waste combustors are the same as for other MACT sources (e.g., record of the occurrence and duration of each malfunction of the air pollution control equipment; see existing § 63.10(b)(2)(ii)). We also show in the table the reference(s) in the regulations for the recordkeeping requirement.

SUMMARY OF DOCUMENTS, DATA, AND INFORMATION THAT YOU MUST INCLUDE IN THE OPERATING RECORD

Reference	Document, data, or information
63.1201(a), 63.10 (b) and (c).	General. Information required to document and maintain compliance with the regulations of Subpart EEE, including data recorded by continuous monitoring systems (CMS), and copies of all notifications, reports, plans, and other documents submitted to the Administrator.
63.1211(d)	Documentation of compliance.
63.1206 (c)(3)(vii).	Documentation and results of the automatic waste feed cutoff operability testing.
63.1209 (c)(2)	Feedstream analysis plan.
63.1204 (d)(3)	Documentation of compliance with the emission averaging requirements for cement kilns with in-line raw mills.
63.1204 (e)(3)	Documentation of compliance with the emission averaging requirements for preheater or preheater/precalciner kilns with dual stacks.
63.1206(b)(1)(ii)(B).	If you elect to comply with all applicable requirements and standards promulgated under authority of the Clean Air Act, including Sections 112 and 129, in lieu of the requirements of Subpart EEE when not burning hazardous waste, you must document in the operating record that you are in compliance with those requirements.
63.1206 (c)(2)	Startup, shutdown, and malfunction plan.

SUMMARY OF DOCUMENTS, DATA, AND INFORMATION THAT YOU MUST INCLUDE IN THE OPERATING RECORD—Continued

Reference	Document, data, or information
63.1206(c)(3)(v).	Corrective measures for any automatic waste feed cutoff that results in an exceedance of an emission standard or operating parameter limit.
63.1206(c)(4)(ii).	Emergency safety vent operating plan.
63.1206 (c)(4)(iii).	Corrective measures for any emergency safety vent opening.
63.1206 (c)(6)	Operator training and certification program.
63.1209 (k)(6)(iii), 63.1209 (k)(7)(ii), 63.1209 (k)(9)(ii), 63.1209 (o)(4)(iii).	Documentation that a substitute activated carbon, dioxin/furan formation reaction inhibitor, or dry scrubber sorbent will provide the same level of control as the original material.

Some commenters are concerned that the specification of media on which these files may be maintained unnecessarily limits the options to facilities, especially those not equipped with computer or other electronic data gathering equipment. We conclude, however, that the options listed under § 63.10(b)(1) seem to provide the greatest flexibility possible, including the reasonable management of paper records through the use of microfilm or microfiche. We encourage the use of computer and electronic equipment, however, for logistical reasons (retrieval and inspection can be easier) and as a means to enhance dissemination to the local community to foster an atmosphere of full and open disclosure about facility operations.

C. How Can You Receive Approval to Use Data Compression Techniques?

You may submit a written request to the Administrator under § 63.1211(f) for approval to use data compression techniques to record data from CMS, including CEMS, on a frequency less than that required by § 63.1209. You must submit the request for review and approval as part of the comprehensive performance test plan. For each CEMS or operating parameter for which you request to use data compression techniques, you must provide: (1) A fluctuation limit that defines the maximum permissible deviation of a new data value from a previously generated value without requiring you to revert to recording each one-minute average; and (2) a data compression limit defined as the closest level to an operating parameter limit or emission standard at which reduced recording is allowed.

You must record one-minute average values at least every ten minutes. If after exceeding a fluctuation limit you remain below the limit for a ten-minute period, you may reinitiate your data compression technique provided that you are not exceeding the data compression limit.

The fluctuation limit should represent a significant change in the parameter measured, considering the range of normal values. The data compression limit should reflect a level at which you are unlikely to exceed the specific operating parameter limit or emission standard, considering its averaging period, with the addition of a new one-minute average.

We provide the following table of recommended fluctuation and data compression limits as guidance. These are the same limits that we discussed in the May 1997 NODA.

RECOMMENDED FLUCTUATION AND DATA COMPRESSION LIMITS

CEMS or control technique and parameter	Fluctuation limit (±)	Data compression limit
Continuous Emission Monitoring System:		
Carbon monoxide	10 ppm	50 ppm.
Hydrocarbon	2 ppm	60% of standard.
Combustion Gas Temperature Quench: Maximum inlet temperature for dry particulate matter control device or, for lightweight aggregate kilns, temperature at kiln exit.	10°F	Operating parameter limit (OPL) minus 30°F.
Good Combustion Practices:		
Maximum gas flowrate or kiln production rate	10% of OPL	60% of OPL.
Maximum hazardous waste feedrate	10% of OPL	60% of OPL.
Maximum gas temperature for each combustion chamber	20°F	OPL plus 50°F.
Activated Carbon Injection:		
Minimum carbon injection feedrate	5% of OPL	OPL plus 20%.
Minimum carrier fluid flowrate or nozzle pressure drop	20% of OPL	OPL plus 25%.
Activated Carbon Bed: Maximum gas temperature at inlet or exit of the bed	10°F	OPL minus 30°F.
Catalytic Oxidizer:		
Minimum flue gas temperature at entrance	20°F	OPL plus 40°F.
Maximum flue gas temperature at entrance	20°F	OPL minus 40°F.
Dioxin Inhibitor: Minimum inhibitor feedrate	10% of OPL	60% of OPL.
Feedrate Control:		

RECOMMENDED FLUCTUATION AND DATA COMPRESSION LIMITS—Continued

CEMS or control technique and parameter	Fluctuation limit (±)	Data compression limit
Maximum total metals feedrate (all feedstreams)	10% of OPL	60% of OPL.
Maximum low volatile metals feedrate, pumpable feedstreams	10% of OPL	60% of OPL.
Maximum total ash feedrate (all feedstreams)	10% of OPL	60% of OPL.
Maximum total chlorine feedrate (all feedstreams)	10% of OPL	60% of OPL.
Wet scrubber:		
Minimum pressure drop across scrubber	0.5 inches water	OPL plus 2 inches water.
Minimum liquid feed pressure	20% of OPL	OPL plus 25%.
Minimum liquid pH	0.5 pH unit	OPL plus 1 pH unit.
Maximum solids content in liquid	5% of OPL	OPL minus 20%.
Minimum blowdown (liquid flowrate)	5% of OPL	OPL plus 20%.
Minimum liquid flowrate or liquid flowrate/gas flowrate ratio	10% of OPL	OPL plus 30%.
Dry scrubber:		
Minimum sorbent feedrate	10% of OPL	OPL plus 30%.
Minimum carrier fluid flowrate or nozzle pressure drop	10% of OPL	OPL plus 30%.
Fabric filter: Minimum pressure drop across device	1 inch water	OPL plus 2 inches water.
Electrostatic precipitator and ionizing wet scrubber: Minimum power input (kVA: current and voltage).	5% of OPL	OPL plus 20%.

Data compression is the process by which a facility automatically evaluates whether a specific data point needs to be recorded. Data compression does not represent a change in the continuous monitoring requirement in the rule. One-minute averages will continue to be generated. With data compression, however, each one-minute average is automatically compared with a set of specifications (i.e., fluctuation limit and data compression limit) to determine whether it must be recorded. New data are recorded when the one-minute average value falls outside these specifications.

We did not propose data compression techniques in the April 1996 NPRM. In response to the proposed monitoring and recording requirements, however, commenters raise concerns about the burden of recording one-minute average values for the array of operating parameter limits that we proposed. Commenters suggest that allowing data compression would significantly reduce the recordkeeping burden while maintaining the integrity of the data for compliance monitoring. We note that data compression should also benefit regulatory officials by allowing them to focus their review on those data that are indicative of nonsteady-state operations and that are close to the operating parameter limit or, for CEMS, the emission standard.

In response to these concerns, we presented data compression specifications in the May 1997 NODA. Public comments on the NODA are uniformly favorable. Therefore, we are including a provision in the final rule that allows you to request approval to use data compression techniques. The fluctuation and data compression limits presented above are offered as guidance to assist you in developing your recommended data compression methodology.

We are not promulgating data compression specifications because the dynamics of monitored parameters are not uniform across the regulated universe. Thus, establishing national specifications would be problematic. Various data compression techniques can be successfully implemented for a monitored parameter to obtain compressed data that reflect the performance on a site-specific basis. Thus, the rule requires you to recommend a data compression approach that addresses the specifics of your operations. The fluctuation and data compression limits presented above are offered solely as guidance and are not required.

The rule requires that you record a value at least once every ten minutes to ensure that a minimum, credible data base is available for compliance monitoring. If you operate under steady-state conditions at levels well below operating parameter limits and CEMS-monitored emission standards, data compression techniques may enable you to achieve a potential reduction in data recording up to 90 percent.

X. What Special Provisions Are Included in Today's Rule?

A. What Are the Alternative Standards for Cement Kilns and Lightweight Aggregate Kilns?

In the May 1997 NODA, we discussed alternative standards for cement kilns and lightweight aggregate kilns that have metal or chlorine concentrations in their mineral and related process raw materials that might cause an exceedance of today's standard(s), even though the source uses MACT control. (See 62 FR 24238.) After carefully considering commenters input, we adopt a process that allows sources to petition the Administrator for alternative mercury, semivolatile metal, low volatile metal, or hydrochloric acid/chlorine gas standards under two different sets of circumstances. One reason for a source to consider a petition is when a kiln cannot achieve the standard, while using MACT control, because of raw material contributions to their hazardous air pollutant emissions. The second reason is limited to mercury, and applies when mercury is not present at detectable levels in the source's raw material. These alternative standards are discussed separately below.

1. What Are the Alternative Standards When Raw Materials Cause an Exceedance of an Emission Standard? See sections 1206(b) (10) and (11)

a. What Approaches Have We Publicly Discussed? We acknowledge that a kiln using properly designed and operated MACT control technologies, including control of metals levels in hazardous waste feedstocks, may not be capable of achieving the emission standards (i.e., the mercury, semivolatile metal, low volatile metal, and/or hydrochloric acid/chlorine gas standards). This can occur when hazardous air pollutants (i.e., metals and chlorine) contained in the raw material volatilize or are entrained in the flue gas such that their contribution to total metal and chlorine emissions cause an exceedance of the emission standard.

Our proposal first acknowledged this possible situation. In the April 1996 NPRM, we proposed metal and chlorine standards that were based, in part, on specified levels of hazardous waste feedrate control as MACT control. To address our concern that kilns may not

be able to achieve the standards when using MACT control technologies, given raw material contributions to emissions, we performed an analysis. Our analysis estimated the total emissions of each kiln including emissions from raw materials, while also assuming the source was using MACT hazardous waste feedrate and particulate matter control. Results of this analysis, which were discussed in the proposal, indicated that there may be several kilns that would not be able to achieve the proposed emission standards while using MACT control, due to levels of metals and chlorine in raw material and/or conventional fuel. (See 61 FR at 17393–17406.) Commenters requested that we provide an equivalency determination to allow sources to comply with a control efficiency requirement (e.g., a minimum metal system removal efficiency) in lieu of the emission standard. (See response below.)

In the May 1997 NODA, we discussed revised standards that defined MACT control, in part, based on hazardous waste metal and chlorine feedrate control—as did the NPRM. (See 62 FR 24225–24235.) However, our revised approach did not define specific levels of hazardous waste metal and chlorine feedrate control, therefore, making it difficult to attribute a kiln's failure to meet emission standards to metals levels in raw materials.[254] In response to a commenter's request, we discussed, in the May 1997 NODA, an alternative approach to address raw material contributions. Our approach did not subject a source to the MACT standards if the source could document that metal or chlorine concentrations in their hazardous waste, and any nonmineral feedstock, is within the range of normal industry levels. The purpose of this requirement was to ensure that metal and chlorine emissions attributable to nonmineral feedstreams were roughly equivalent to those from sources achieving the MACT emission standards. The use of an industry average, or normal metal and chlorine level, was to serve as a surrogate MACT feedrate control level for the alternative standard because we did not define a specific level of control as MACT. We also requested comment on how best to determine normal hazardous waste metal and chlorine levels.

Today's final rule uses a revised standard setting methodology that defines specific levels of hazardous waste metal and chlorine feedrates as MACT control.[255] As a result, we do not need to define normal, or average, metal and chlorine levels for the purposes of this alternative standard provision.

b. What Comments Did We Receive on Our Approaches? There were many comments supporting and many opposing the concept of allowing alternative standards. Several commenters focus on the Agency's legal basis for this type of alternative standard. Some, supporting an alternative standard, wrote that feedrate control of raw materials at mineral processing plants is not a permissible basis for MACT control. In support of their position, some directed our attention to the language found in the Conference Report to the 1990 CAA amendments.[256] However, as we noted in the April 1996 NPRM and as was mentioned by many commenters[257], the Conference Report language is not reflected in the statute. Section 112(d)(2)(A) of the statute states, without caveat, that MACT standards may be based on "process changes, substitution of materials or other modifications."

As noted above, our MACT approach in today's rule relies on metal and chlorine hazardous waste feedrate control as part of developing MACT emission standards. It should be noted, that we do not directly regulate raw material metal and chlorine input under this approach, although there is no legal bar for us to do so. Since raw material feedrate control is not an industry practice, raw material feedrate control is not part of the MACT floor. In addition, we do not adopt such control as a beyond-the-floor standard. We conclude it is not cost-effective to require kilns to control metal and chlorine emissions by substituting their current raw materials with off-site raw materials. (See metal and chlorine emission standard discussions for cement kilns and lightweight aggregate kilns in Part Four, Sections VII and VIII.)[258]

Although today's rule offers a petition process, we considered varying levels of metal and chlorine emissions attributable to raw material in identifying the metal and chlorine emission standards through our MACT floor methodology. This consideration helps to ensure that the emission standards are achievable for sources using MACT control. Therefore, we anticipate very few sources, if any, will need to petition the Administrator for alternative standards. However, it is possible that raw material hazardous air pollutant levels, at a given kiln location, could vary over time and preclude kilns from achieving the emission standards. We believe, therefore, that it is appropriate to adopt a provision to allow kilns to petition for alternative standards so that future changes in raw material feedstock will not prevent compliance with today's emission standards.

Other commenters believe that alternative standards are not necessary because there are kilns with relatively high raw material metal concentrations already achieving the proposed standards. To address this point, and to reevaluate the ability of kilns to achieve the emission standards without new control of metals and chlorine in raw material and conventional fuel, we again estimated the total metal and chlorine emissions, assuming each kiln fed metal and chlorine at the defined MACT feedrate control levels.[259]

The following table summarizes the estimated achievability of the emission standards assuming kilns used MACT control. Our analysis determined achievability both at the emission standard and at the design level—70 percent of the standard. (To ensure compliance most kilns will "design" their system to operate, at a minimum, 30 percent below the standard.) The table describes the number of test conditions in our data base that would not meet the emission standard or meet the design level by estimating total emissions. For example, all cement kiln test conditions achieve the mercury emission standard, assuming all cement

[254] We could not estimate a cement kiln's total emissions (i.e., to determine emission standard achievability) based on the assumption that the kiln is feeding metals in the hazardous waste at the MACT control feedrate levels.

[255] As explained earlier, the emission standards for metals and chlorine reflect the performance of MACT control, which includes control of metals and chlorine in the hazardous waste feed materials. As further explained, sources are not required to adopt MACT control. Sources must, however, achieve the level of performance which MACT control achieves. Therefore, sources are not required to control metals and chlorine hazardous waste feedrates to the same levels as MACT control in order to comply with the standards for metals and chlorine. Rather, the source can elect to achieve the emission standard by any means, which may or may not involve hazardous waste feedrate control

[256] H.R. Rep. No. 101–952, at p. 339, 101st Cong., 2d Sess. (Oct. 26, 1990).

[257] See 62 FR 24239, May 2, 1997.

[258] The nonhazardous waste Portland Cement Kiln MACT rulemaking likewise controls semivolatile metal and low volatile metal emissions by limiting particulate matter emissions, and did not adopt beyond-the-floor standards based on raw material metal and chlorine feedrate control—see 64 FR 31898.

[259] When estimating emissions, the Agency assumed the kiln was feeding metals and chlorine in its hazardous waste at the lower of the MACT defining maximum theoretical emission concentration levels or the level actually demonstrated during its performance test. See Final Technical Support Document for Hazardous Waste Combustor MACT Standards, Volume II: Selection of MACT Standards and Technologies, July 1999, for further discussion.

kilns used MACT control. On the other hand, the table also indicates that four cement kiln test conditions out of 27 do not achieve the design level for mercury. In our analysis, if all test conditions achieved both the standard and the design level, we concluded that there is no reason to believe raw material contributions to metal and chlorine emissions might cause a compliance problem.

CEMENT KILN AND LIGHTWEIGHT AGGREGATE KILN EMISSION STANDARD ACHIEVABILITY RESULTS

Source category	Mercury	Semivolatile metal	Low Volatile metal	Total chlorine
No. of cement kiln test conditions in MACT data base not achieving standard	[1]0/27	[1]1/38	[1]1/39	[1]2/42
No of cement kiln test conditions in MACT data base not achieving 70 % design level	4/27	6/38	3/39	3/42
No of lightweight aggregate kiln test conditions in MACT data base not achieving standard	0/17	5/22	2/22	3/18
No of lightweight aggregate kiln test conditions in MACT data base not achieving 70% design level	0/17	5/22	4/22	10/18

*Number after slash denotes total number of test conditions.

Our analysis illustrates that, subject to the assumptions made, some lightweight aggregate kilns and cement kilns have raw material hazardous air pollutant levels that could affect their ability to achieve the emission standard if no additional emission controls were implemented (e.g., additional hazardous waste feedrate control, or better air pollution control device efficiency). Nevertheless, we conclude that it is difficult to determine whether raw material hazardous air pollutant contributions to the emissions result in unachievable emission standards because of the difficulty associated with differentiating raw material hazardous air pollutant emissions from hazardous waste pollutant emissions. This uncertainty has led us to further conclude that it is appropriate to allow kilns to petition for alternative standards, provided that they submit site-specific information that shows raw material hazardous air pollutant contributions to the emissions prevent the kiln from complying with the emission standard even though the kiln is using MACT control.

Many commenters dislike the idea of an alternative standard. They wrote that regulation of raw material metal content may be necessary to control semivolatile metal and low volatile metal emissions at hazardous waste burning kilns because: (1) These kilns have relatively high chlorine levels in the flue gas (which predominately originate from the hazardous waste); and (2) chlorine tends to increase metal volatility. We agree that increased flue gas chlorine content from hazardous waste burning operations may result in increased metals volatility, which then could result in higher raw material metal emissions.[260] The increased presence of chlorine at hazardous waste burning kilns presents a concern. To address this concern, we require kilns to submit data or information, as part of the alternative standard petition, documenting that increased chlorine levels associated with the burning of hazardous waste, as compared to nonhazardous waste operations, do not significantly increase metal emissions attributable to raw material. This requirement is explained in greater detail later in this section.

Many commenters also point out that the alternative standard, at least as originally proposed, could result in metal and chlorine emissions exceeding the standard to possible levels of risk to human health and the environment. We agree that this potential could exist; however, the RCRA omnibus process serves as a safeguard against levels of emissions that present risk to human health or the environment. Therefore, sources operating pursuant to alternative standards may likely be required to perform a site-specific risk assessment to demonstrate that their emissions do not pose an unacceptable risk. The results of the risk assessment would then be used to develop facility-specific metal and chlorine emission limits (if necessary), which would be implemented and enforced through omnibus conditions in the RCRA permit.[261]

c. How Do I Demonstrate Eligibility for the Alternative Standard? To demonstrate eligibility, you must submit data or information which shows that raw material hazardous air pollutant contributions to the emissions prevent you from complying with the emission standard, even though you use MACT control for the standard from which you seek relief. To allow flexibility in implementation, we do not mandate what this demonstration must entail. However, we believe that a demonstration should include a performance test while using MACT control or better (i.e., the hazardous waste feedrate control and air pollution control device efficiencies that are the basis of the emission standard from which you seek an alternative). If you still do not achieve the emission standards when operating under these conditions, you may be eligible for the alternative standard (provided you further demonstrate that you meet the additional eligibility requirements discussed below). If you choose to conduct this performance test after your compliance date, you should first obtain approval to temporarily exceed the emission standards (for testing purposes only) to make this demonstration, otherwise you may be subject to enforcement action.

In addition, you must make a showing of adequate system removal efficiency to be eligible for an alternative standard for semivolatile metal, low volatile metal, or hydrochloric acid/chlorine gas. This requirement provides a check to ensure that you are exceeding the emission standard solely because of raw material contributions to the emissions, and not because of poor system removal efficiency for the hazardous air pollutants for which you are seeking relief. (It is possible that poor system removal efficiencies for these hazardous air pollutants result in emissions that are higher than the emission standards, even though the particulate matter emission standard is met.) This check could be done without the expense of a second performance test. The system removal efficiency achieved in the performance test described above could be calculated for the hazardous air pollutants at issue. You would then

[260] The potential for increased metal emissions is stronger for semivolatile metals (lead, in particular), but low volatile metal emissions still have potential to increase with increased flue gas chlorine concentrations. See Final Technical Support Document for Hazardous Waste Combustor MACT Standards, Volume II: Selection of MACT Standards and Technologies, July 1999, for further discussion.

[261] RCRA permits for hazardous waste combustors address total emissions, regardless of the source of the pollutant due to the nexus with the hazardous waste treatment activities. See *Horsehead v Browner*, 16 F. 3d 1246, 1261–63 (D.C. Cir. 1994)(Hazardous waste combustion standards may address hazardous constituents attributable to raw material inputs so long as thee is a reasonable nexus with the hazardous waste combustion activites).

multiply the MACT control hazardous waste feedrate level (or the feedrate level you choose to comply with)[262] for the same hazardous air pollutant by a factor of one minus the system removal efficiency. This estimated emission value would then be compared to the emission standard, and would have to be below the standard for you to qualify for the alternative standard.

As discussed in the next section, this alternative standard requires you to use MACT control as defined in this rulemaking. For lightweight aggregate kilns, MACT control for chlorine is feedrate control and use of an air pollution control system that achieves a given system removal efficiency for chlorine. Thus, lightweight aggregate kilns that petition the Administrator for an alternative chlorine standard must also demonstrate, as part of a performance test, that it achieves a specified minimum system removal efficiency for chlorine. This eligibility requirement is identical to the above-mentioned eligibility demonstration that requires sources to make a showing of adequate system removal efficiency, with the exception that here we specify the system removal efficiency that must be achieved.[263]

For an alternative mercury standard, you do not have to perform a performance test demonstration and evaluation. We do not require this test because the mandatory hazardous waste mercury feedrate specified in § 63.1206(b)(10) and (11) ensures that your hazardous waste mercury contribution to the emissions will always be below the mercury standard.[264]

Finally, if you apply for semivolatile metal or low volatile metal alternative standards, you also must demonstrate, by submitting data or information, that increased chlorine levels associated with the burning of hazardous waste, as compared to nonhazardous waste operations, do not significantly increase metal emissions attributable to raw material. We expect that you will have to conduct two different emission tests to make this demonstration (although the number of tests should be determined on a site-specific basis). The first test is to determine metal emission concentrations when the kiln is burning conventional fuel with typical chlorine levels. The second test is to determine metal emissions when chlorine feedrates are equivalent to allowable chlorine feedrates when burning hazardous waste. You should structure these tests so that metal feedrates for both tests are equivalent. You would then compare metal emission data to determine if increased chlorine levels significantly affects raw material metal emissions.

d. What Is the Format of the Alternative Standard? The alternative standard requires that you use MACT control, or better, as applicable to the standard for which you seek the alternative. MACT control, as previously discussed, consists of hazardous waste feed control plus (for all relevant hazardous air pollutants except mercury) further control via air pollution control devices. Cement kilns and lightweight aggregate kilns will first have to comply with a specified hazardous waste metal and chlorine feedrate limit, as defined by the MACT defining maximum theoretical emission concentration level for the applicable hazardous air pollutant or hazardous air pollutant group. This work practice is necessary because there is no other reliable means of measuring that hazardous air pollutants in hazardous waste are controlled to the MACT control levels, i.e., that hazardous air pollutants in raw material are the sole cause of not achieving the emission standard. (See CAA section 112(h).) To demonstrate control of hazardous air pollutant metals emissions to levels reflecting the air pollution control device component of MACT control, you must be in compliance with the particulate matter standard. Finally, we require lightweight aggregate kilns to use an air pollution control device that achieves the specified MACT control total chlorine removal efficiency. This work practice is necessary because there is no other way to measure whether the failure to achieve the chlorine emission standard is caused by chlorine levels in raw materials.[265] See § 63.1206(b)(10) and (11) for a list of the maximum achievable control technology requirements for purposes of this alternative standard.[266]

There may be site-specific circumstances which require other provisions, imposed by the Administrator, in addition to the mandatory requirement to use MACT control. These provisions could be operating parameter requirements such as a further hazardous waste feedrate limitation. For instance, a kiln that petitions the Administrator for an alternative semivolatile emission standard may need to limit its hazardous waste chlorine feedrate to better assure that chlorine originating from the hazardous waste does not significantly affect semivolatile metal emissions attributable to the raw material. As discussed above, a kiln must demonstrate that increased chlorine levels from hazardous waste do not adversely affect raw material metal emissions to be eligible for this alternative standard. For this scenario, the alternative standard would be in the form of a semivolatile metal hazardous waste feedrate restriction which would require you to use MACT control, in addition to a hazardous waste chlorine feedrate limit.

Additional provisions also could include emission limitations that differ from those included in today's rulemaking. For example, the Administrator may determine it appropriate to require you to comply with metal or chlorine emission limitations that are than the standards in this final rulemaking. The emission limitation would likely consider the elevated levels of metal or chlorine in your raw material. This type of emission limitation would be no different, except for the numerical difference than the emission limitations in today's rule because it would limit total metal and chlorine emissions while at the same time ensuring MACT control is used. If the Administrator determines that such an emission limitation is appropriate, you must comply with both a hazardous waste feedrate restriction, which requires you to use MACT control, and an emission limitation. A potential method of determining an appropriate emission limitation would be to base the limit on levels demonstrated in the comprehensive performance test.

e. What Is the Process for an Alternative Standard Petition? If you are seeking alternative standards because raw materials cause you to exceed the standards, you must submit a petition request to the Administrator that includes your recommended alternative

You may choose to comply with a hazardous waste feedrate limit that is lower than the MACT control levels required by this alternative standard.

[263] The requirement to achieve an 85.0% and 99.6% chlorine system removal efficiency for existing and new lightweight aggregate kilns, respectively, together with the requirement to comply with a hazardous waste chlorine feedrate limitation, ensures that chlorine emissions attributable to hazardous waste are below the standards.

[264] The MACT defining hazardous waste maximum theoretical emission concentration for mercury is less than mercury standard itself, thus hazardous waste mercury contributions to the emissions will always be below the standard.

[265] There is no corresponding chlorine air pollution control device efficiency requirement for cement kilns since air pollution control is not the basis for MACT control of cement kiln chlorine emissions.

[266] See also "Final Technical Support Document for Hazardous Waste Combustor MACT Standards, Volume IV: Selection of MACT Standards and Technologies", Chapter 11, July 1999, for further discussion on how the maximum achievable control technologies were chosen for the hazardous air pollutants.

standard provisions. At a minimum, your petition must include data or information which demonstrates that you meet the eligibility requirements and that ensure you use MACT control, as defined in today's rule.

Until the authorized regulatory agency approves the provisions of the alternative standard in your petition (or establishes other alternative standards) and until you submit a revised NOC that incorporates the revised standards, you may not operate under your alternative standards in lieu of the applicable emission standards found in §§ 63.1204 and 63.1205. We recommend that you submit a petition well in advance of your scheduled comprehensive performance test, perhaps including the petition together with your comprehensive performance test plan. You may need to submit this petition in phases to ultimately receive approval to operate pursuant to the alternative standard provisions, similar to the review process associated with performance test workplans and performance test reports. After initial approval, alternative standard petitions should be resubmitted every five years for review and approval, concurrent with subsequent future comprehensive performance tests, and should contain all pertinent information discussed above.

You may find it necessary to complete any testing associated with documenting your eligibility requirements prior to your comprehensive performance test to determine if in fact you are eligible for this alternative standard, or you may choose to conduct this testing at the same time you conduct your comprehensive performance test. This should be determined on a site-specific basis, and will require coordination with the Administrator or Administrator's designee.

2. What Special Provisions Exist for an Alternative Mercury Standard for Kilns?

See § 63.1206(b)(10) and (11).

a. What Happens if Mercury Is Historically Not Present at Detectible Levels? Situations may exist in which a kiln cannot comply with the mercury standard pursuant to the provisions in § 63.1207(m) when using MACT control and when mercury is not present in the raw material at detectable levels.[267] As a result, today's rule provides a petition process for an alternative mercury standard which only requires compliance with a hazardous waste mercury feedrate limitation, provided that historically mercury not been present in the raw material at detectable levels.

We received comments from the lightweight aggregate kiln industry expressing concern with the stringency of the mercury standard. Commenters oppose stringent mercury standards, in part, because of the difficulty of complying with day-to-day mercury feedrate limits. One potential problem cited pertains to raw material mercury detection limits. Commenters point out that if a kiln assumed mercury is present in the raw material at the detection limit, the resulting calculated uncontrolled mercury emission concentration could exceed, or be a significant percentage of, the mercury emission standard. This may prevent a kiln from complying with the mercury emission standard pursuant to the provisions of § 63.1207(m), even though MACT control was used.

We agree with commenters that this is a potential problem. In addition, it is not appropriate to implement a mercury standard compliance scheme that is relatively more burdensome for kilns with no mercury present in raw material, as compared to kilns with high levels of mercury in their raw material.[268] Because we establish provisions that provide alternatives to kilns with high levels of mercury in the raw material, we are doing the same for those kilns which do not have mercury present in raw material at detectable levels.

b. What Are the Alternative Standard Eligibility Requirements? To be eligible for this alternative mercury standard, you must submit data or information which demonstrates that historically mercury has not been present in your raw material at detectable levels. You do not need to show that mercury has never been present at detectable levels. The determination of whether your data and information sufficiently demonstrate that mercury has not historically been present in your raw material at detectable levels will be made on a site-specific basis. To assist in this determination, you also should provide information that describes the analytical methods (and their associated detection limits) used to measure mercury in the raw material, together with information describing how frequently you measured raw material mercury content.

If you are granted this alternative standard, you will not be required to monitor mercury content in your raw material for compliance purposes. However, after initial approval, this alternative standard must be reapproved every five years (see discussion below). Therefore, you should develop a raw material mercury sampling and analysis program that can be used in future alternative mercury standard petition requests for the purpose of demonstrating that mercury has not historically been present in raw material at detectable levels.

c. What Is the Format of Alternative Mercury Standard? The alternative standard requires you to use MACT control for mercury (i.e., the level of hazardous waste feedrate control specified in today's rule). This alternative standard for mercury is conceptually identical to the emission standards in this final rule, because it requires the use of an equivalent level of hazardous air pollutant MACT control as compared to the MACT control used to determine the emission standards.

The mercury feedrate control level will differ for new and existing sources, and will differ for cement kilns and lightweight aggregate kilns. See § 63.1206(b) (10) and (11) for a list of the mercury hazardous waste feedrate control levels for purposes of this alternative standard.[269]

d. What Is the Process for The Alternative Mercury Standard Petition? If you are seeking this alternative mercury standard, you must submit a petition request to the Administrator that includes the required information discussed above. You will not be allowed to operate under this alternative standard, in lieu of the applicable emission standards found in §§ 63.1204 and 63.1205, unless and until the Administrator approves the provisions of this alternative standard and until you submit a revised NOC that incorporates this alternative standard.

[267] The provisions in § 63.1207(m) waive the requirement for you to conduct a performance test, and the requirement to set operating limits based on performance test data, provided you demonstrate that uncontrolled mercury emissions are below the emission standard (see Part 4, Section X.B). These provisions allow you to assume mercury is present at half the detection limit in the raw material, when a feedstream analysis determines that mercury is not present at detectable levels, when calculating your uncontrolled emissions.

[268] Kilns that comply with alternative mercury standards because of high mercury levels in their raw material are not required to monitor the mercury content of their raw material unless the Administrator requires this as an additional alternative standard requirement. Thus, absent the alternative mercury standard discussed in this section, a source that does not have mercury present in their mercury at detectable levels would be subject to more burdensome raw material feedstream analysis requirements.

[269] Also see Final Technical Support Document for Hazardous Waste Combustor MACT Standards, Volume IV: Selection of MACT Standards and Technologies, Chapeter 11, July 1999, for further discussion on how the maximum achievable control technologies were chosen for mercury.

We recommend that you submit these petitions well in advance of your scheduled comprehensive performance test, perhaps including the petition together with your comprehensive performance test plan. After initial approval, alternative standard petitions should be resubmitted every five years for review and approval, concurrent with subsequent future comprehensive performance tests, and should contain all pertinent information discussed above.

B. Under What Conditions Can the Performance Testing Requirements Be Waived? See § 63.1207(m).

In the April 1996 NPRM, we proposed a waiver of performance testing requirements for sources that feed low levels of mercury, semivolatile metal, low volatile metal, or chlorine (see 61 FR at 17447). Under the proposed waiver, a source would be required to assume that all mercury, semivolatile metal, low volatile metal, or chlorine (dependent on which hazardous air pollutant(s) the source wishes to petition for a waiver) fed to the combustion unit, for all feedstreams, is emitted from the stack. The source also would need to show that these uncontrolled emission concentrations do not exceed the associated emission standards, taking into consideration stack gas flow rate. The above requirements would apply for all periods that a source elects to operate under this waiver and for which the source is subject to the requirements of this rulemaking. All comments received on this topic support this approach, and no commenters suggest alternative procedures to implement this provision. Today's rule finalizes the proposed performance test waiver provision, with one minor change expected to provide industry with greater flexibility when demonstrating compliance without compromising protectiveness.

1. How Is This Waiver Implemented?

The April 1996 proposal identified two implementation methods to document compliance with this waiver provision. In today's rule we finalize both proposed methods and add another implementation method to provide greater flexibility when demonstrating compliance with the provisions of this performance test waiver. As proposed, the first approach allows establishment and continuous compliance with one maximum total feedstream feedrate limit for mercury, semivolatile metal, low volatile metal, or chlorine and one minimum stack gas flow rate. The combined maximum feedrate and minimum stack gas flow rate must result in uncontrolled emissions below the applicable mercury, semivolatile metal, low volatile metal, or chlorine emission standards. Both limits would be complied with continuously; any exceedance would require the initiation of an automatic waste feed cut-off.

Also as proposed, the second approach accommodates operation under different ranges of stack gas flow rates and/or metal and chlorine feedrates. Today's rule allows establishment of different modes of operation with corresponding minimum stack gas flow rate limits and maximum feedrates for metals or chlorine. If you use this approach, you must clearly identify in the operating record which operating mode is in effect at all times, and you must properly adjust your automatic waste feed cutoff levels accordingly.

The third approach, which is an outgrowth of our proposed approaches, allows continuous calculation of uncontrolled stack gas emissions, assuming all metals or chlorine fed to combustion unit are emitted out the stack. If you use this approach, you must record these calculated values and comply with the mercury, semivolatile metal, low volatile metal, or chlorine emission standards on a continuous basis. This approach provides greater operational flexibility, but increases recordkeeping since the uncontrolled emission level must be continuously recorded and included in the operating record for compliance purposes.

If you claim this waiver provision, you must, in your performance test workplan, document your intent to use this provision and explain which implementation approach is used. Other than those limits required by this provision, you will not be required to establish or comply with operating parameter limits associated with the metals or chlorine for which the waiver is claimed. Your NOC also must specify which implementation method is used. The NOC must incorporate the minimum stack gas flowrate and maximum metal and chlorine feedrate as operating parameter limits, or include a statement which specifies that you will comply with emission standard(s) by continuously recording your uncontrolled metal and chlorine emission rate.

If you cannot continuously monitor stack gas flow rate, for the purpose of demonstrating compliance with the provisions of this waiver, you may use an appropriate surrogate in place of stack gas flow rate (e.g., cement kiln production rate). However, if you use a surrogate, you must provide in your performance test workplan data that clearly and reasonably correlates the surrogate parameter to stack gas flow rate.

2. How Are Detection Limits Handled Under This Provision?

We did not address in April 1996 NPRM how nondetect metal and chlorine feedstream results are handled when demonstrating compliance with the feedrate limits or when calculating uncontrolled emission concentrations under this provision. Commenters likewise did not offer suggestions of how to handle nondetect data for this provision. After careful consideration, for the purposes of this waiver, we require that you must assume that the metals and chlorine are present at the full detection limit value when the analysis determines the metals and chlorine are not detected in the feedstream (except as described in the following paragraph). Because performance testing is waived under this provision, it is appropriate to adopt a more conservative assumption that metals and chlorine are present at the full detection limit for the purposes of this waiver. (In other portions of today's rule we make the assumption that 50 percent presence is appropriate given the different context involved). Assuming full detection limits provides an additional level of assurance that resulting emissions still reflect MACT and do not pose a threat to human health and the environment. If you cannot demonstrate compliance with the provisions of this waiver when assuming full detection limits, then you should not claim this waiver and should conduct emissions testing to demonstrate compliance with the emission standard.

Based on the comments and as discussed in the previous section (Section A.2.a), we conclude it is not appropriate, for purposes of this performance test waiver provision, to require a kiln to assume mercury is present at the full detection limit in its raw material when the feedstream analysis determines mercury is not present at detectable levels. As a result, we allow kilns to assume mercury is present at one-half the detection limit in raw materials when demonstrating compliance with the performance test waiver provisions whenever the raw material feedstream analysis determines that mercury is not present at detectable levels.

C. What Other Waiver Was Proposed, But Not Adopted?

Waiver of the Mercury, Semivolatile Metal, Low Volatile Metal, or Chlorine Standard

We proposed not to subject sources to one or more of the mercury, semivolatile metal, low volatile metal, or chlorine emission standards (and other requirements) [270] if their feedstreams did not contain detectable levels of that associated metal or chlorine (e.g., if their feedstreams did not contain a detectable level of chlorine, the hydrochloric acid/chlorine gas standard would be waived—see 61 FR at 17447). As part of this waiver, a feedstream sampling and analysis plan would be developed and implemented to document that feedstreams did not contain detectable levels of the metals or chlorine.

Several commenters supported this waiver, stating that it is of no benefit to human health or the environment to require performance testing, monitoring, notification, and record-keeping of constituents not fed to the combustion unit. However, commenters were divided in their support of the need to set minimum feedstream detection limits. Those supporting specified detection limits wrote that detection limits are needed to ensure that appropriate analytical procedures are used and needed to provide consistency between sources. Those opposing specified detection limits believed that detection limits are highly dependent on feedstream matrices. Therefore, to impose a detection limit that applies to all sources and all feedstreams would not be practicable. One commenter questioned basing this waiver on nondetect values because a feedstream analyses that detects, at any time, a quantity of the metal or chlorine just above the detection limit may be considered to be out of compliance.

We agree that little or no environmental benefit may be gained by requiring performance testing, monitoring, notification, and record keeping for a constituent not fed to the combustion unit. However, based on our careful analysis of comments and on our reevaluation of the practical implementation issue inherent in this type of waiver, we find that it may not always be practicable to use detection limits to determine if a waste does or does not contain metals or chlorine. We are concerned that facility-specific detection limits may vary, from source to source, at levels such that sources with detection limits in the high-end of the distribution (due to their complex waste matrix) have the potential for significant metal or chlorine emissions. Under the facility-specific detection limit approach, a high-end detection limit source with relatively high emissions could qualify for the waiver; however, a source with a simpler feedstream matrix with significantly lower amounts of metals in the feedstream (but just above the detection limit) would not qualify. This not only turns the potential benefit of a waiver provision on its head, but raises serious questions of national consistency, fairness, and evenness of environmental protection to surrounding communities. We also conclude that it is impractical to set one common detection limit for each hazardous air pollutant as part of this waiver because, as commenters stated, detection limits are matrix dependent.

Due to these issues, we were unable to devise an implementable and acceptable nondetect waiver provision, and therefore do not adopt one in today's final rule. As is described in the previous section (Section B), however, we do provide a waiver of performance testing requirements to sources that feed low levels of mercury, semivolatile metal, low volatile metal, or chlorine. Although this waiver provision does not waive the emission standard, monitoring, notification, recordkeeping, and reporting requirements, it does waive emission tests and compliance with operating parameter limits for the associated metals or chlorine.

D. What Equivalency Determinations Were Considered, But Not Adopted?

In response to comments we received from the April 1996 NPRM, we included in the May 1997 NODA a discussion of an allowance of a one-time compliance demonstration for hydrocarbon and carbon monoxide at cement kilns equipped with temporary midkiln sampling locations. (See 62 FR 24239.) This equivalency determination required that alternative, continuously monitored, operating parameters be used in lieu of continuous monitoring of hydrocarbon/carbon monoxide. As discussed below, we conclude that the shortcomings associated with the proposed alternative operating parameters created sufficient uncertainties, for implementation and overall environmental protection, that we are not adopting an equivalency determination option in this rulemaking. However, cement kilns have the opportunity to petition the Administrator under § 63.8(f) and 63.1209(g)(1) to make a site-specific case for this type of equivalency determination.

In response to the April 1996 NPRM, we received comments indicating that some kilns would need to either operate at inefficient back-end temperatures (to oxidize hydrocarbons desorbed from the raw material) or be required to install and maintain a midkiln sampling system to demonstrate compliance with the hydrocarbon/carbon monoxide standards. Commenters believe that this may not be feasible for some kilns because: (1) Raising back end temperatures may increase dioxin formation; (2) most long kilns are not equipped to sample emissions at the midkiln location; (3) costs associated with retrofit and maintenance may be considered high; and (4) maintenance problems associated with the sampling duct are difficult to overcome.

We received numerous comments on the proposed hydrocarbon/carbon monoxide equivalency approach described in the May 1997 NODA. Many cement kilns support the option and defend the use of alternative operating parameters in lieu of continuous carbon monoxide and hydrocarbon monitors. Many commenters oppose using any parameters other than carbon monoxide or hydrocarbon as a combustion efficiency indicator and as surrogate emission standards for the nondioxin organic hazardous air pollutants. We have found that a number of factors suggest that a special provision allowing use of alternative operating parameters, in lieu of carbon monoxide and/or hydrocarbon, is neither necessary nor appropriate to include in this rulemaking.

The alternative operating parameters associated with a one-time demonstration would have to assure that compliance with the carbon monoxide/hydrocarbon standard is maintained at the midkiln location on a continuous basis. We considered adopting several different operating parameters in lieu of hydrocarbon/carbon monoxide monitoring to achieve this goal. Maximum production rate was considered as a continuous residence time indicator. Minimum combustion zone temperature, continuously monitored destruction and removal efficiency using sulphur hexafluoride, and minimum effluent NO_x limits were also examined to ensure adequate temperature is continuously maintained in the combustion zone. To ensure adequate turbulence, we considered using minimum kiln effluent oxygen concentration. Commenters did not suggest additional alternative operating parameters.

Each of these operating parameters have potential shortcomings, and we are not convinced that use of these parameters, even in combination, provides a combustion efficiency indicator as reliable as continuous

[270] Ancillary performance testing, monitoring, notification, record keeping, and reporting requirements.

hydrocarbon/carbon monoxide monitoring. We have identified the following potential problems with these alternative operating parameters: (1) Effluent kiln oxygen concentration may not correlate well to carbon monoxide/hydrocarbon produced from oxygen deficient zones in the kiln;[271,272] (2) pyrometers, or other temperature monitoring systems, may not provide direct and reliable measurements of combustion zone temperature;[273] (3) some combustion products of sulphur hexaflouride are toxic and regulated hazardous air pollutants;[274] (4) there are no demonstrated performance specifications for continuous sulphur hexaflouride monitors; and (5) it is contrary to other air emission limitations (in principle) to require minimum (not maximum) NO_x limits.

On balance, the lack of adequate documentation allowing us to resolve these uncertainties and potential problem areas prevents us from further considering this type of hydrocarbon/carbon monoxide equivalency determination provision for inclusion in today's final rule. As stated above, however, cement kilns have the opportunity to petition the Administrator under § 63.8(f) to make a site-specific case for this type of equivalency determination.

As is explained in Part Four, Section VII.C(9)(c), today's rulemaking subjects newly constructed hazardous waste burning cement kilns at greenfield sites to a main stack hydrocarbon standard of either 20 or 50 ppmv. We clarify that this standard applies to these sources even if they applied and received approval for an alternative monitoring approach described above, because the intent of this hydrocarbon standard is to control organic hazardous air pollutants desorbed from raw material and not to control combustion efficiency.

[271] An oxygen deficient zone in the kiln due to inadequate mixing, which could potentially result in the emission of significant amounts of carbon monoxide and organic hazardous air pollutants, could be well mixed with excess air by the time it reaches the kiln exit, where oxygen is monitored. Thus the oxygen monitor may not record any oxygen concentration change and would not serve as an adequate control to ensure proper combustion turbulence.

[272] We do not have, nor did commenters submit, data which show whether effluent kiln oxygen concentration adequately correlates with carbon monoxide/hydrocarbon produced from oxygen deficient zones in the kiln.

[273] See Part Five, Section VII.D.(2)(b)(iii), for further discussion on combustion zone temperature measurements.

[274] Hydrofluoric acid, a CAA hazardous air pollutant, is a possible combustion byproduct of sulphur hexafluoride.

E. What are the Special Compliance Provisions and Performance Testing Requirements for Cement Kilns with In-line Raw Mills and Dual Stacks?

Preheater/precalciner cement kilns with dual stacks and cement kilns with in-line raw mills require special compliance provisions and performance testing requirements because they are unique in design.

Preheater/precalciner kilns with dual stacks have two separate air pollution control systems. As discussed in Section F below, emission characteristics from these separate stacks could be different. As a result, these kilns must conduct emission testing in both stacks to document compliance with the emission standards[275] and must establish separate operating parameter limits for each air pollution control device. See § 63.1204(e)(1).

Cement kilns with in-line raw mills either operate with the raw mill on-line or with the raw mill off-line. As discussed in Section F below, these two different modes of operation could have different emission characteristics. As a result, cement kilns with in-line raw mills must conduct emission testing when the raw mill is off-line and when the raw mill is on-line to document compliance with the emission standards and must establish separate operating parameters for each mode of operation. These kilns must document in the operating record each time they change from one mode of operation to the alternate mode. They must also begin calculating new rolling averages for operating parameter limits and comply with the operating parameter limits for that mode of operation, after they officially switch modes of operation. If there is a transition period associated with changing modes of operation, the kiln operator has the discretion to determine when, during this transition, the kiln has officially switched to the alternate mode of operation and when it must begin complying with the operating parameter limits for that alternate mode of operation. See 63.1204(d)(1).

Preheater/precalciner kilns with dual stacks that also have in-line raw mills do not have to conduct dioxin/furan testing in the bypass stack to demonstrate compliance with the standard when the raw mill is off-line. We have concluded that dioxin/furan emissions in the bypass stack are not dependent on the raw mill operating status because dioxin/furan emissions are primarily dependent on temperature control. A kiln may assume that when the raw mill is off-line, the dioxin/furan emissions in the bypass stack are identical to the dioxin/furan emissions when the raw mill is on-line and may comply with the bypass stack dioxin/furan raw mill on-line operating parameters for both modes of operation. See § 63.1204(d)(1).

[275] This does not apply to the hydrocarbon and carbon monoxide standard. See discussion in Part Four, Section VII.D on hydrocarbon and carbon monoxide standards for cement kilns.

F. Is Emission Averaging Allowable for Cement Kilns with Dual Stacks and In-line Raw Mills?

In the April 1996 NPRM, we did not subdivide cement kilns by process type when setting emission standards (see 61 FR at 17372–17373). As a result, we received many comments from the cement kiln industry indicating that preheater/precalciner cement kilns with dual stacks and cement kilns with in-line raw mills have unique design and operating procedures that necessitate the use of emission averaging when demonstrating compliance with the emission standards. We addressed these comments in the May 1997 NODA by discussing an allowance for emission averaging (for all standards except for hydrocarbon/carbon monoxide) at preheater/precalciner cement kilns with dual stacks when demonstrating compliance with the emission standards (see 62 FR at 24240). We also discussed allowing cement kilns with in-line raw mills to demonstrate compliance with the emission standards on a time-weighted average basis to account for different emission characteristics when the raw mill is active as opposed to when it is inactive. In light of the favorable comments received, and the lack of significant concerns to the contrary, we adopt these emission averaging provisions in today's rule.

1. What Are the Emission Averaging Provisions for Cement Kilns with In-line Raw Mills?

See § 63.1204(d).

As explained in the May 1997 NODA, emissions of hazardous air pollutants can be different when the raw mill is active versus periods of time when the mill is out of service. We received many comments on this issue, all in favor of an emissions averaging approach to accommodate these different modes of operation. As a result, we adopt a provision that allows cement kilns that operate in-line raw mills to average their emissions on a time-weighted basis to show compliance with the metal and chlorine emission standards.

Emission averaging for in line raw mills will not be allowed when they demonstrate compliance with the hydrocarbon/carbon monoxide standard

because hydrocarbon and carbon monoxide are monitored continually and serve as a continuous indicator of combustion efficiency. No commenter states that emission averaging is needed for hydrocarbon/carbon monoxide. Emission averaging for particulate matter will not be allowed because this standard is based on the New Source Performance Standards found in § 60.60 subpart F. We interpret these standards to apply regardless if the raw mill is on or off. (Note that this is consistent with the proposed Nonhazardous Waste Portland Cement Kiln Rule. See 56 FR 14188). In addition, emission averaging for dioxin/furan will not be allowed because cement kilns with in-line raw mills are expected to control temperature during both modes of operation to comply with the standard. No commenter stated that emission averaging was needed for dioxin/furan.

a. What Is the Averaging Methodology? In the May 1997 NODA, we did not specify an averaging methodology. As a result, commenters suggested that the following equation would adequately calculate the time-weighted average concentration of a regulated constituent when considering the length of time the in-line raw mill is on-line and off-line:

$$C_{total} = \left\{\left(C_{mill\text{-}off}\right)\times\left(T_{mill\text{-}off} / \left(T_{mill\text{-}off} + T_{mill\text{-}on}\right)\right)\right\} + \left\{\left(C_{mill\text{-}on}\right)\times\left(T_{mill\text{-}on} / \left(T_{mill\text{-}off} + T_{mill\text{-}on}\right)\right)\right\}$$

Where:

C_{total} = time-weighted average concentration of a regulated constituent considering both raw mill on time and off time.

$C_{mill\text{-}off}$ = average performance test concentration of regulated constituent with the raw mill off-line.

$C_{mill\text{-}on}$ = average performance test concentration of regulated constituent with the raw mill on-line.

$T_{mill\text{-}off}$ = time when kiln gases are not routed through the raw mill.

$T_{mill\text{-}on}$ = time when kiln gases are routed through the raw mill.

We agree that this equation properly calculates the time-weighted average concentration of the regulated constituent when considering both raw mill operation and raw mill down time and are adopting it in today's rule.

b. What Is Required During Emission Testing? As discussed, sources that use this emission averaging provision must conduct performance testing for both modes of operation (with the raw mill both on-line and off-line), demonstrating appropriate operating parameters during both test conditions. One commenter suggests that the Agency allow sources to demonstrate both raw mill on-line and off-line operations within the same test runs. This would allow a test under one condition instead of two and would give more flexibility by ensuring identical operating parameters for raw mill on-line operations as opposed to off-line operations. This also could theoretically result in fewer automatic waste feed cutoffs when transitioning from one mode of operation to another. Although this approach may have some benefit, we conclude that it is necessary to demonstrate, through separate emission testing, the comparison of emissions when operating with the raw mill on-line as opposed to the raw mill off-line. The separate emission testing is necessary to demonstrate whether emissions are higher or lower when the raw mill is not active to assure compliance with the emission standards on a time-weighed basis.[276]

c. How Is Compliance Demonstrated? In the May 1997 NODA, we did not discuss specific compliance provisions of an emission averaging approach. After careful consideration, however, we determine that to use this emission averaging provision, you must document and demonstrate compliance with the emission standards on an annual basis by using the above equation. Shorter averaging times were considered, but were not chosen since it may be difficult for a kiln with an in-line raw mill to comply with a short averaging period if the raw mill must be off-line for an extended period of time. Therefore, you must annually document in your operating record that compliance with the emission standard was demonstrated for the previous year's operation by calculating your estimated annual emissions with the above equation. The one-year block average begins on the day you submit your NOC. You must include all hazardous waste operations in that one year block period, and you also must include all nonhazardous waste operations that you elect to comply with hazardous waste MACT standards, when demonstrating annual compliance.[277]

d. What Notification Is Required? Again, in the May 1997 NODA, we did not discuss specific notification requirements. After careful consideration, we determined that if you use this emission averaging provision, you must notify the Administrator of your intent to do so in your performance test workplan. Several commenters favor allowing time-weighted emissions averaging, so long as historical data are submitted to justify allowable time weighting factors (explained below). We agree with these comments and require that you submit historical raw mill operation data in your performance test workplan. These data should be used to estimate the future down-time the raw mill will experience. You must document in your performance test workplan that estimated emissions and estimated raw mill down-time will not result in an exceedance of the emission standard on an annual basis. You also must document in your NOC that the emission standard will not be exceeded based on the documented emissions from the compliance test and predicted raw mill down-time.

2. What Emission Averaging Is Allowed for Preheater or Preheater-Precalciner Kilns with Dual Stacks? (See § 63.1204(e).)

As explained in the May 1997 NODA, and in an earlier section of this preamble (see Part Four, Section V.II.B), emissions of hazardous air pollutants can be different in a preheater or preheater-precalciner cement kiln's main stack as opposed to the bypass stack. We received many comments on this issue, all in favor of the emissions averaging approach discussed in the NODA to accommodate the different emission characteristics in these stacks. Therefore, we today finalize a provision to allow preheater or preheater-precalciner cement kilns with dual stacks to average emissions on a flow-weighted basis to demonstrate compliance with chlorine and metal emission standards.

Emission averaging to demonstrate compliance with the hydrocarbon/carbon monoxide standard is not

[276] The Agency does not have, nor did commenters submit, sufficient data to determine whether emissions will be higher or lower when the raw mill is inactive.

[277] Today's rulemaking allows a hazardous waste source, when not burning hazardous waste, to either comply with the hazardous waste cement kiln MACT standards or the non hazardous waste cement kiln standards (see Part Five, Section I).

needed at preheater and preheater-precalciner cement kilns with dual stacks since today's rule requires these kilns to monitor hydrocarbon or carbon monoxide in the bypass stack only.[278] Emission averaging for particulate matter is no longer needed since the format of the standard (0.15 kg/Mg dry feed) implicitly requires the kiln to consider mass emissions from both stacks to demonstrate compliance with the emission standard. In addition, emission averaging for dioxin/furan will not be allowed because cement kilns with dual stacks are expected to control temperature in both air pollution control systems to comply with the standard. No commenter stated that emission averaging was needed for dioxin/furan.

a. What Is the Average Methodology? In the May 1997 NODA, we did not specify an averaging methodology. However, commenters suggested that the following is an appropriate equation to calculate the flow-weighted average concentration of a regulated constituent when considering emissions from both stacks:

$$C_{tot} = \left\{\left(C_{main}\right) \times \left(Q_{main} / \left(Q_{main} + Q_{bypass}\right)\right)\right\} + \left\{\left(C_{bypass}\right) \times \left(Q_{bypass} / \left(Q_{main} + Q_{bypass}\right)\right)\right\}$$

Where:

C_{tot} = flow-weighted average concentration of the regulated constituent

C_{main} = average performance test concentration demonstrated in the main stack

C_{bypass} = average performance test concentration demonstrated in the bypass stack

Q_{main} = volumetric flowrate of main stack effluent gas

Q_{bypass} = volumetric flowrate of bypass effluent gas

We agree that this equation properly calculates the flow-weighted average concentration of the regulated constituent when considering emissions from both stacks and it is adopted in today's rule.

b. What Emissions Testing and Compliance Demonstrations Are Necessary? To use this emission averaging provision, you must simultaneously conduct performance testing in both stacks during your comprehensive performance test to compare emission levels of the regulated constituents (as proposed). These emission data must be used as inputs to the above equation to demonstrate compliance with the emission standard.

You must develop operating parameter limits, and incorporate these limits into your NOC, that ensures your emission concentrations, as calculated with the above equation, do not exceed the emission standards on a twelve-hour rolling average basis. These operating parameters should limit the ratio of the bypass stack flowrate and combined bypass and main stack flowrate such that the emission standard is complied with on a twelve-hour rolling average basis. Whereas this was not proposed, we conclude that this provision is necessary to assure compliance with the standards since the ratio of stack gas flowrate and bypass stack flowrate could deviate from the levels demonstrated during the performance test.

c. What Notification Is Required? In the May 1997 NODA, we did not discuss specific notification requirements. After careful consideration, however, we determine that to use this emission averaging provision, you must notify the Administrator of your intent to do so in your performance test workplan. The performance test workplan must include, at a minimum, information that describes your proposed operating limits. You must document your use of this emission averaging provision in your NOC and document the results of your emissions averaging analysis after estimating the flow weighted average emissions with the above equation. You must also incorporate into the NOC the operating limits that ensures compliance with emission standards on a twelve-hour rolling average basis.

G. What Are the Special Regulatory Provisions for Cement Kilns and Lightweight Aggregate Kilns that Feed Hazardous Waste at a Location Other Than the End Where Products Are Normally Discharged and Where Fuels Are Normally Fired? (§ 63.1206(b)(12) and (b)(8)(ii))

As discussed in Part Four, Section IV.B., the Agency is allowing you to comply with either a carbon monoxide or hydrocarbon standard. However, we have concluded that this option to comply with either standard should not apply if you operate a cement kiln or lightweight aggregate kiln and feed hazardous waste at a location other than the end where products are normally discharged and where fuels are normally fired these other locations include, at the mid kiln or the cold, upper end of the kiln. Consistent with the Boilers and Industrial Furnace regulations (see § 266.104(d)), we are today requiring you to comply with the hydrocarbon standard, and are not giving you the option to comply with the carbon monoxide standard, if you feed hazardous waste in this manner. This is because we are concerned that hazardous waste could be fired into a location such that nonmetal compounds in the waste may be merely evaporated or thermally cracked to form pyrolysis byproducts rather than be completely combusted.[279] If this occurs, there is the potential that little carbon monoxide will be generated even though significant hydrocarbons are being emitted. Carbon monoxide monitoring would thus not ensure that organic hazardous air pollutant emissions are being properly controlled. We do not anticipate this requirement to be overly burdensome, since it is a current requirement of the Boilers and Industrial Furnace regulation.

We have also concluded that it would not be appropriate for you to comply with the hydrocarbon standard in the bypass duct if you operate a cement kiln and feed hazardous waste into a location downstream of your bypass sampling location relative to flue gas flow direction. Such operation would result in hazardous waste combustion that would not be monitored by a hydrocarbon monitor. Today's rulemaking thus requires you to comply with the main stack hydrocarbon standard of 20 ppmv if you feed hazardous waste in this manner. This is also consistent with the Boilers and Industrial Furnace regulations, which do not allow you to monitor hydrocarbons in the bypass duct if you operate a short kiln and if you feed hazardous waste in the preheater or precalciner (see § 266.104(f)(1)).

In addition to the above requirements, if you operate a cement kiln or

[278] New kilns at greenfield locations must also comply with a main stack hydrocarbon standards. For these sources, emission averaging for hydrocarbons would not appropriate because the purpose of the main stack hydrocarbon standard is to control organic hazardous air pollutants that originate from the raw material.

[279] See Final Rule, Burning of Hazardous Waste in Boilers and Industrial Furances, February 21, 1991, 56 FR at 7158.

lightweight aggregate kiln and feed hazardous waste at a location other than the end where products are normally discharged and where fuels are normally fired, you are also required to demonstrate compliance with the destruction and removal efficiency standard every five years as opposed to a one-time destruction and removal demonstration We require you to do this because the unique design and operation of such a waste firing system necessitates a compliance demonstration for this standard every five years (see previous discussion in part Four, Section IV.A.3.).

H. What is the Alternative Particulate Matter Standard for Incinerators? See § 63.1206(b)(15).

As discussed in Part Four, Section II.A.2, today's rule establishes a particulate matter standard of 0.015 gr/dscf for incinerators as a surrogate to control nonenumerated metal hazardous air pollutants (i.e., antimony, cobalt, manganese, nickel, selenium). Of course, particulate matter air pollution control devices also exert control on other metals (except highly volatile species such as mercury), including the enumerated metals. (The enumerated metal hazardous air pollutants are those CAA metal hazardous air pollutants regulated directly via individual emission standards in today's rule, i.e., mercury, semivolatile metals, low volatile metals). A number of commenters, primarily incinerator operators, assert that a particulate matter standard should not be used as a surrogate control for metals in situations where the particulate matter does not contain any metal hazardous air pollutants (i.e., situations when the waste does not contain any metals, except perhaps mercury and the resulting ash contains only relatively benign ash or soot). These commenters argue that the cost associated with reducing particulate matter levels below 0.015 gr/dscf would be excessive and that some type of alternative standard (reflecting superior metal feedrate control) be created.

After considering these comments and another type of particulate matter control technology, we conclude that it is appropriate to offer an alternative particulate matter standard of 0.03 gr/dscf for incinerators that have de minimis levels of hazardous air pollutant metals in their feedstreams, and we have adopted a petition process to allow incinerators to seek this alternative standard. An alternative particulate matter standard is within the scope of our overall preamble discussions of the control of particulate matter and metal emissions, the ways in which the Agency was considering feedrate as part of its MACT analysis, our approaches to enumerated and non-enumerated CAA hazardous air pollutant metals, and the presentation of options for compliance testing when only de minimis levels of metals are present.

1. Why is this Alternative Particulate Matter Standard Appropriate under MACT?

An alternative particulate matter floor level of 0.030 gr/dscf is appropriate for an incinerator that can demonstrate it has de minimis levels of CAA hazardous air pollutant metals (except mercury), as defined below, in its feedstreams. As discussed in other portions of this preamble and in our technical background documents for this rulemaking, control of metals (other than mercury) is a function, in a practical sense, of both the feedrate of those metals into the combustion device as well as the design, operation, and maintenance of a source's air pollution control devices for particulate matter. Given the intertwined relationship between these two factors, the Agency has concluded that a particulate matter floor control level of 0.015 gr/dscf is not warranted for sources using superior feedrate control (i.e. beyond MACT) to reduce metal emissions, which in this case would be shown by having non-detectable levels of metals in their feedstreams (discussed in more detail below).[280]

We also conclude that the floor control for this alternative standard is the use of a venturi scrubber or the use of the same, but less sophisticated, particulate matter control technologies that were established for the 0.015 gr/dscf standard.[281] These floor technologies, including venturi scrubbers, were the basis of our particulate matter floor standard of 0.029 gr/dscf which was published for comment in the May 1997 NODA. See 62 FR at 24221. Although we have since determined that 0.015 gr/dscf is a technically achievable and appropriate MACT floor control level for incinerators based on a suite of technologies that does not include venturi scrubbers, we conclude that an alternative floor level of 0.030 gr/dscf that includes venturi scrubbers in the floor is appropriate for sources using superior metal feedrate control. Put another way, we view the average of the 12 percent best performing incinerators as including incinerators with venturi scrubbers when the incinerator is exercising beyond-MACT feed control of hazardous air pollutant metals.[282] We also note that the final rule for medical waste incinerators establishes a particulate matter standard of 0.030 gr/dscf for medium sized existing sources and small new sources that is based on medium efficiency venturi scrubbers. See 62 FR at 48348. The alternative floor level of 0.030 gr/dscf that is adopted in this final rulemaking is appropriate when we include venturi scrubbers as an alternative floor control technology when superior feed rate control is being employed.[283]

Particulate matter control below 0.030 gr/dscf is still necessary to control metal emissions at sources with de minimis levels of hazardous air pollutant metals in their feedstreams for several reasons. Even if an incinerator obtains non-detect analytical results for one or more metals in its feedstream, this does not conclusively prove that metals are absent. Rather, all that such laboratory results mean is that the metals are not contained in the feedstream above the detection limit used in the analysis. This detection limit may be low but it can also be fairly high depending on the waste matrix. As previously discussed in Part Five, Section X.C.1, commenters have indicated that feedstream metal detection limits are highly dependent on the feedstream matrix.

Given that our prerequisite for the alternative standard is that de minimis levels of metals are present, we must take into account this phenomenon of matrix-dependent detection limits. We are unwilling simply to allow facilities upon a showing of non-detectable levels of metals to avoid particulate matter controls entirely, especially given the complementary controls in practice provided by both feedrate control and

[280] We do not require you to document that your feedstreams have de minimis mercury levels to qualify for this alternative standard because mercury is a volatile metal and is generally not controlled with particulate matter control technologies.

[281] As discussed in Part Four, Section VI.C.4.a, particulate matter floor control for hazardous waste incinerators is defined as the use of either fabric filters, electrostatic precipitators (dry or wet), or ionizing wet scrubbers (sometimes in combination with venturi, packed bed, or spray tower scrubbers) that achieve particulate matter emission levels of 0.015 gr/dscf or less.

[282] See Final Technical Support Document, Volume 3, Chapter Four, July, 1999, for further discussion.

[283] The cement kilns and lightweight aggregate kilns that are also covered by today's final rule have feedrates of metals far above any de minimis threshold. See Final Technical Support Document, Volume 3, Chapter Four, July, 1999, for further discussion. Therefore, in light of the commenters requesting alternative standards and in light of the feedstream levels of metals going into the kilns, we have elected to offer an alternative particulate matter standard only to incinerators.

particulate matter air pollution control devices. On the other hand, it would be overly narrow to give essentially no credit for superior feedrate control (shown by non-detectable levels of metals) by requiring these incinerators to meet 0.015 gr/dscf. It appears, therefore, to be an appropriate balance to allow facilities with non-detectable levels of metals (other than mercury) to meet a standard of 0.030 gr/dscf. This will assure control reflecting performance of the best performing plants that use superior (i.e., beyond MACT) feedrate control, especially in the event that detection limits for a particular waste matrix are unusually high. Because we are moving to a Performance Based Measurement System (PBMS) we cannot rely upon previously approved EPA standard methods as a means to predict detection levels in various matrices. Therefore, we are retaining a particulate matter standard 0.030 gr/dscf to offset the potential for high detection limits.

2. How Do I Demonstrate Eligibility for the Alternative Standard?

Although we adopt a particulate matter standard as a surrogate to control nonenumerated metal hazardous air pollutants, particulate matter control is an integral part of the semivolatile and low volatile metal emission standards as well, as discussed above. See Part Four, Section II.A.1, for further discussion. We therefore conclude that you must document that not only the nonenumerated metals meet the de minimis criteria explained below, but that the semivolatile and low volatile metals do as well. This provides assurance that superior feedrate control is being achieved for all hazardous air pollutant metals, which in turn allows us to provide you with the opportunity to use the alternative particulate matter standard.

To demonstrate eligibility, you must document that you meet two qualification requirements. First, you must document that your feedstreams do not contain detectable levels of CAA hazardous air pollutant metals, apart from mercury (i.e., antimony, cobalt, manganese, nickel, selenium, lead, cadmium, chromium, arsenic and beryllium). This requirement is necessary to ensure that you have de minimis levels of metals in your feedstreams, and assures us that you are using superior feedrate control. You must conduct feedstream analyses at least annually to document that your feedstreams do not contain detectable levels of these metals. Permitting officials may, on a site-specific basis, require more frequent feedstream analyses to better ensure that you comply with this eligibility requirement.

Second, you must document that your calculated uncontrolled metal emissions, i.e., no system removal efficiency, are below the numerical semivolatile and low volatile metal emission standards. When calculating these uncontrolled emissions, you must assume metals are present at one-half the detection limit and are categorized into their appropriate volatility grouping for purposes of this requirement. The one-half detection limit assumption provides a relatively, but not overly, conservative way assuring that de minimis determinations are not given to sources with very high detection limits.

For example, the combined uncontrolled emissions for lead, cadmium and selenium, when assuming these metals are present at one-half the detection limit, must be below 240 μg/dscm. The combined uncontrolled emissions for antimony, cobalt, manganese, nickel, chromium, arsenic and beryllium, when assuming these metals are present at one-half the detection limit, must be below 97 μg/dscm. We require this second eligibility requirement because (1) it ensures you have de minimis levels of metals in your feedstreams even though metals can be present at levels below the detection limit, and (2) it encourages you to obtain reasonable detection limits.

3. What Is the Process for the Alternative Standard Petition?

If you are seeking this alternative particulate matter standard, you must submit a petition request to the Administrator, or authorized regulatory Agency, that includes the documentation discussed above. You will not be allowed to operate under this alternative standard until the Administrator determines that you meet the above qualification requirements. Although we are not requiring that you include this petition as part of the comprehensive performance test workplan, we strongly recommend that you do so. This approach has several advantages: (1) It will clarify which PM standard you are complying with as of your documentation of compliance, and avoid potential confusion about your state of compliance; (2) it will help ensure that the planned performance tests cover all of the relevant parameters and standards and will facilitate interpretation of performance test results; (3) it will help avoid costs of having to conduct a separate performance test to show compliance with the alternative standard, which would include re-testing and re-establishment of many of the same parameters as would be covered in the initial comprehensive performance test; and (4) it will help maximize the time that the regulatory agency needs to evaluate your demonstration of the prerequisite, non-detect levels of metals in your feed, including the time needed for you to respond to any additional information that may be requested by the agency. Agency approval of a comprehensive performance test workplan that also includes this petition request will be deemed as approval for you to operate pursuant to this alternative standard. In our implementation of today's final rule, we will address as appropriate various considerations related to processing these petitions, including the timing of the submittal, review and approval. We fully expect that Agency permit officials will act expeditiously on these petitions so that both the source and the reviewing official know what particulate matter level the comprehensive performance test must show is being achieved.

XI. What Are the Permitting Requirements for Sources Subject to this Rule?

As indicated in Part One, we intend the requirements of this rule to meet our obligations for hazardous waste combustor air emission standards under two environmental statutes, the Clean Air Act and the Resource Conservation and Recovery Act. The overlapping air emission requirements of these two statutes have historically resulted in some duplication of effort. In developing a permitting scheme that accommodates the requirements of both statutes, with regard to the new air emissions limitations and standards being promulgated in this rule, our goal is to avoid any such duplication to the extent possible. This goal is consistent with the RCRA statutory directive of section 1006(b)(1) to "integrate all provisions of (RCRA) for purposes of administration and enforcement and (* * *) avoid duplication, to the maximum extent practicable, with the appropriate provisions of the Clean Air Act." [284] It also is consistent with our objectives to streamline requirements and follow principles that promote "good government."

[284] See also CAA section 112(n)(7) (requirements of section 112 should be consistent with those of RCRA Subtitle C to the maximum extent practicable).

A. What Is the Approach to Permitting in this Rule?

1. In General What Was Proposed and What Was Commenters' Reaction?

In the April 1996 NPRM, we proposed placing the MACT air emissions standards in the CAA regulations at 40 CFR part 63 and proposed to reference the standards in the RCRA regulations at 40 CFR parts 264 and 266. (see 61 FR 17451, April 19, 1996). At that time, we believed that placing the standards in both the CAA and RCRA regulations would provide maximum flexibility to regulatory authorities at the Regional, State, or local levels to coordinate permitting and enforcement activities in the manner most appropriate for their individual circumstances.[285] We also believed that this approach would alleviate the potential for duplicative requirements across permitting programs.

In addition, we presented two examples of ways for permitting hazardous waste combustors subject to the new MACT standards. These examples reflected, in part, the proposed approach of incorporating the new MACT standards into both RCRA and CAA implementing regulations.[286] (See 61 FR 17451, April 19, 1996.) In the first example, the two permitting programs would work together to issue one permit, under joint CAA and RCRA authority, that would meet all the requirements of both programs. In the second example, the two permitting programs would coordinate their efforts with each program issuing a separate permit; the items common to both (e.g., the air emissions standards) would be included in one permit and incorporated by reference into the other permit.

Comments on the April 1996 NPRM expressed widespread support for providing flexibility for regulatory agencies to implement common sense permitting schemes that fit their organization and resources. However, commenters disagreed as to which approach would best provide such flexibility. A few commenters thought that the April 1996 NPRM approach, placing the standards in both CAA and RCRA regulations, would both provide flexibility to choose which program would issue permits and therefore avoid duplication.

On the other hand, we received several comments challenging our assumption that placement of the standards in both CAA and RCRA regulations would optimize flexibility for regulatory agencies. These commenters believed that the regulatory agencies would be, in fact, more limited. They noted that both the RCRA and CAA programs would be responsible for incorporating the standards, to some extent, into their permits, even if just by referencing the other. Commenters also were concerned with the potential for conflicting conditions between the two permits, particularly with regard to testing, monitoring, and certification requirements. In addition, they felt that the conditions common to both permits might be subject to separate decision-making processes. For example, they might potentially be subject to two different administrative or judicial appeals procedures and two permit modification procedures. If this happened, the Agency would not achieve its stated objective of avoiding duplication between the two programs. Additionally, our example pointing to close coordination between programs to avoid duplication was countered by commenters examples where such coordination has not occurred, either due to logistical problems within regulatory agencies or to differences in administrative processes between the two programs.

Commenters also expressed concern about the potential for enforcement of the same requirement under two different statutes that they believed the proposed approach would create. Since the requirements would have to be incorporated into both RCRA permits and CAA title V permits, sources would have to comply with both. Although we stated in the proposal that we did not expect to take enforcement action under both permits (see 62 FR 17452), commenters noted that this would not restrain State or local authorities from initiating dual enforcement actions. In addition, commenters pointed out that they would be vulnerable to citizen suits under both statutes.

The majority of the commenters voiced a desire for the Agency to avoid duplicate requirements or redundant processes. We received several suggestions for alternative approaches, which can be grouped in three ways: (1) Requiring regulatory agencies to develop a separate permitting program to cover elements common to both CAA and RCRA (i.e., air emissions and related operating requirements) while maintaining separate permits for the other elements; (2) Developing a single multi-media permit to cover all RCRA and CAA requirements applicable to hazardous waste combustors; and (3) placing the standards only in CAA regulations and incorporation only into the title V permits.

The first alternative, i.e., requiring a separate permitting program for air emissions and related parameters, is a very different approach that would likely require the development of more new regulations. However, duplication may be avoided without promulgation of an "independent" permitting scheme just for the elements common to both RCRA and CAA programs. Other alternatives would not involve the time and effort needed to craft and adopt a new regulatory scheme, such as that suggested.

We believe that the second alternative, pursuing multi-media permits, had some merit. As commenters pointed out, the Agency's Permits Improvement Team expressed support for multimedia permits in its "Concept Paper." The Permits Improvement Team also acknowledged, however, that true multimedia permits have been difficult to develop. We still support multimedia permitting, and this rule does not preclude this approach. Nevertheless, we do not believe that, at this point, we can rely on multimedia permitting as an overall approach to implementing this rule. Some States have successfully piloted multi-media permitting or implemented "one-stop" permits that address both RCRA and CAA requirements. We encourage States to continue these efforts and to apply them to hazardous waste combustor permitting to the extent possible. Even for States that do not currently pursue multimedia or one-stop permits, this rule presents unique opportunities to start moving in that direction.

The third alternative had a couple of variations. The straightforward version was simply to place the MACT air emission standards in the CAA regulations, incorporate them into title V permits, and continue to issue RCRA permits for other RCRA-regulated aspects of the combustion unit, as well as of the rest of the facility (e.g., corrective action, general facility standards, other combustor-specific concerns such as materials handling, risk-based emissions limits and operating requirements, as appropriate, and other hazardous waste management units). A variation of this was to develop a RCRA permit-by-rule provision to defer to title V permits. The straightforward approach was favored by the majority of the commenters. Some offered, as further support for this

[285] When referring to permitting under the CAA, we mean operating permits under title V of the CAA. The regulations governing state and federal title V permit programs are codified in 40 CFR parts 70 and 71, respectively.

[286] The possibility of issuing only one EPA permit under either CAA or RCRA authority, and the ensuing legal barriers rendering that approach infeasible, also were discussed in the preamble for the proposed rule (61 FR 17451, April 19, 1996).

position, a reference to the recommendation put forth by the Permit Improvement Team's Alternatives to Individual Permits Task Force that called for permitting air emissions from hazardous waste combustors under the CAA. The variation of developing a RCRA permit-by-rule provision is not as responsive to commenters' concerns because, among other things, that approach would not avoid the potential for dual enforcement. Although the permit-by-rule has the effect of deferring to the title V permit, the facility is still considered to have a RCRA permit for the combustor's air emissions.

2. What Permitting Approach Is Adopted in Today's Rule?

We found the arguments for the straightforward approach (i.e., placing the standards only in the CAA regulations and relying on the title V permitting program) persuasive. Based on the comments we received, and our subsequent analysis, we narrowed our options for how to permit hazardous waste combustors subject to the new MACT standards and elaborated on our preferred approach in the May 1997 NODA (see 62 FR 24249). In the NODA, we described an approach to place the MACT emissions standards only in the CAA regulations at 40 CFR part 63 Subpart EEE, and rely on implementation through the air program, including operating permit programs developed under title V. Under this approach, which we are adopting in today's final rule, MACT air emissions and related operating requirements are to be included in title V permits; RCRA permits will continue to be required for all other aspects of the combustion unit and the facility that are governed by RCRA (e.g., corrective action, general facility standards, other combustor-specific concerns such as materials handling, risk-based emissions limits and operating requirements, as appropriate, and other hazardous waste management units).

Placement of the emissions standards solely in part 63 appears to be the most feasible way to avoid duplicative permitting requirements. We agree with the commenters' views that placement of the standards in both RCRA and CAA regulations would require both permits to address air emissions. Permitting authorities would not be able to choose which program would be responsible for implementing the requirements. Placing the standards in both sets of regulations would obligate both programs to address the standards in permits issued under their respective authorities. Simply put, permitting authorities would not be free to incorporate the new standards into either CAA title V permits or RCRA permits; rather, they would need to incorporate the new standards, to some degree, into both permits.[287] Having determined that placement of the standards in both sets of regulations is not desirable, we revisited the question of whether one program could defer to the other. The CAA does not provide authority to defer to other environmental statutes,[288] so we could not place the MACT standards solely in RCRA regulations, which would have consequently allowed them to be incorporated only into a RCRA permit. On the other hand, RCRA does provide authority to forego RCRA emissions standards in favor of MACT standards imposed under the CAA. As stated above in Part One, Section I, under the authority of RCRA section 3004(a), it is appropriate to eliminate these RCRA standards because they would only be duplicative and so are no longer necessary to protect human health and the environment. Also as discussed there, RCRA section 1006(b) provides further authority for the Administrator to eliminate the existing RCRA air emissions standards in order to avoid duplication with the new MACT standards. Thus, we use our authority to defer RCRA controls on the air emissions to the part 63 MACT standards, which ultimately are incorporated into title V permits issued under the CAA.

The majority of the comments received following publication of the May 1997 NODA supported our preferred approach to permitting the hazardous waste combustors. Several commenters expressed appreciation for this effort, and concluded that our approach would avoid duplication and have the RCRA and title V permits work to complement each other rather than potentially contradict each other. Although sources will still have two permits, the scope and subject matter of each will be distinguishable. The title V permit will focus on the operation of the combustion unit (e.g., air emissions and related parameters) while the RCRA permit will continue to focus on basic hazardous waste management at the facility (e.g., general facility standards, corrective action, other units, and so on). The only time there might be conditions in both RCRA and title V permits that address the same hazardous waste combustor operating requirements and limits is when there is a need to impose more stringent risk-based conditions, e.g., under RCRA "omnibus" authority, in the RCRA permit. The RCRA permitting authority would add terms and conditions based on the omnibus clause only if it found, at a specific facility, that the MACT standards were not sufficient to protect human health or the environment. This issue is discussed in greater detail in Part III, Section IV (RCRA Decision Process). In those limited cases, sources and permitting agencies may agree to identify the RCRA limit in the title V permit. Since one goal of the title V program is to clarify a source's compliance obligations, it will be beneficial, and convenient, to acknowledge the existence of more stringent limits or operating conditions derived from RCRA authority for the source in the title V permit, even though the requirements would not reflect CAA requirements. We strongly encourage Regional, State, and local permitting authorities to take advantage of this beneficial option.

Some commenters continued to maintain that flexibility to choose which program would permit air emissions would only be provided if we were to promulgate the standards in both CAA and RCRA regulations. They reiterated the position they had taken in their comments on the initial proposal that this approach would not result in duplication across the programs; they discounted concerns over duplicative requirements or dual enforcement scenarios by saying that it was basically not in a permitting authority's best interests to issue duplicate permits. We found the contrary, that placement of the standards in both sets of regulations does not provide flexibility for a regulatory agency to choose one permit program or another. Such an approach would obligate both permits to cover air emissions and related operating requirements. This result does not achieve our or the commenters' objective of avoiding duplication across programs. Although the actual burden on permit writers may not be significant if, for example, the title V permit were to just cross-reference the appropriate sections of the RCRA permit, the requirements would still be enforceable under both vehicles, and would go through dual administrative processes. As mentioned above, EPA would like to

[287] As discussed earlier, states may be able to develop combined permits that address both RCRA and CAA requirements. Such permits would have to cite the appropriate authority (CAA or RCRA) for each condition, and have to be signed by the appropriate officials of each program. Permit conditions would continue to be enforced under their respective authorities as well.

[288] Although CAA section 112(n)(7) is directed at harmonizing requirements with RCRA, it does not provide a jurisdictional basis for deferral (i.e., nonpromulgation of mandated section 112(d) MACT standards in light of the existence of RCRA standards).

avoid this type of dual enforcement and dual process scenario in implementing the new standards.

3. What Considerations Were Made for Ease of Implementation?

Our approach in the final rule does not limit the options available to state permitting authorities for implementing the new standards. The primary concern about which program (RCRA or CAA) assumes lead responsibility for administering air emissions requirements appears to revolve around resource issues. The RCRA program has been the lead program for permitting hazardous waste combustors for many years, consequently, RCRA program staff have developed a great deal of expertise in this area. They are familiar with source owners and operators, the combustion units, and special considerations associated with permitting hazardous waste combustion activities. Some commenters are concerned that by deferring regulation of air emissions standards to the CAA, that expertise will no longer be available. They express doubt about the ability of air toxics implementation programs and title V programs to take on these sources, given the complexity of hazardous waste combustor operations and the volume of title V permits that need to be issued over the next several years.[289]

In response to these comments, we note that many State Air programs currently play key roles in permitting hazardous waste combustors under RCRA. Furthermore, States may find that much of the expertise used to regulate other air sources is directly applicable to regulating the hazardous waste combustor sources subject to the new MACT standards, and that the resources in their air programs are sufficient to handle these additional sources. If, however, a State shares commenters' concerns that its air program, as it currently exists, may not be able to take on these sources, the State may continue using the resources and expertise of its RCRA program even though the new standards are being promulgated as part of the CAA regulations.

In the May 1997 NODA, we discussed the flexibility afforded to States by codifying the standards under only one statute (see 62 FR 24246). Two potential options were described in the NODA for how this might be achieved: (1) A State could simply have its RCRA staff implement the hazardous waste combustor MACT standards; or (2) a State could formally incorporate the standards into its State RCRA program. In response to the NODA, some State environmental agencies commented that, as a matter of State law, they would not be able to incorporate the new standards into their authorized hazardous waste programs unless they are included in federal RCRA regulations. We acknowledge, therefore, that some States may not be able to pursue the second option. In any case, we recommend against this option because, as discussed below, it would perpetuate having duplication between two permits. The first option would, however, still be feasible. For example, the States could explore the flexibility provided through Performance Partnership Agreements [290] if they would like to have their RCRA program staff continue their work with the hazardous waste combustors.

If a State chooses to use either of the above options to continue applying RCRA expertise to hazardous waste combustors, we anticipate that RCRA program staff would be responsible for many of the implementation activities, such as reviewing documents submitted by the source (e.g., the Notice of Intent to Comply, the progress report, and the performance test plan), and working with the source to resolve any differences (e.g., on anticipated operating requirements or on results of comprehensive performance tests).

Where the process issues would start to diverge between the two options is at the actual permitting stage. Under the first option (RCRA staff implementing CAA regulations), the standards would be incorporated only into title V permits. Title V permits cover a wide range of applicable requirements under the CAA; the hazardous waste combustor MACT standards are likely to be just one piece.[291] We believe that the RCRA permit writer would draft the hazardous waste combustor portion of the title V permit, and would coordinate with the title V permit writer in the CAA program who has responsibility for the source's overall permit to ensure that the hazardous waste combustor portion is properly incorporated. In short, the RCRA permit writer would simply be developing a component of a title V permit instead of developing a component of a RCRA permit. State permitting authorities that wish to continue using their RCRA expertise will undoubtedly explore this approach.

If a State pursues the second option of incorporating the new hazardous waste combustor MACT standards into its State RCRA program, there may still be a need to incorporate the standards into both title V and RCRA permits. The CAA does not provide authority to defer title V permitting to other environmental programs. Thus, the source would still be subject to title V requirements (i.e., a RCRA permit could not "replace" a title V permit). Furthermore, an EPA Region or a State who chooses to obtain authorization for the hazardous waste combustor MACT standards under RCRA would also have to start implementing the new standards under CAA authority (including title V permitting requirements) even as the State begins efforts to incorporate the standards into its State RCRA program.

Although close cooperation between the RCRA and title V permit writers could minimize duplicative efforts in developing permits and avoid conflicting conditions in the two permits (for example, by putting the conditions in one permit and just referencing them in the other), this approach still results in the potential for enforcement and citizen suits under both permits. [292] As discussed above, we intend to avoid duplicate permitting and enforcement scenarios for hazardous waste combustor MACT standards; thus, we strongly encourage States that choose to pursue this approach to develop implementation schemes that minimize the potential for such duplication to the extent practicable.

B. What Is the Applicability of the Title V and RCRA Permitting Requirements?

This section briefly summarizes the applicability of both title V and RCRA permitting requirements under the permitting scheme discussed in Section XI. A. above. It also discusses the relationship of this permitting scheme to both the proposed revisions to combustion permitting procedures from June 1994 and to the RCRA preapplication meeting requirements. Our decision to subject hazardous waste combustors that are considered area

[289] Title V permits are required for many more sources than those subject to the HWC MACT standards. Currently, there are approximately 20,000 sources that are subject to title V; there are only about HWCs subject to today's rule.

[290] Within negotiated agreements, there is flexibility in Performance Partnership Grants to strategically move funds, and flexibility in Performance Partnership Agreements found in the National Environmental Performance Partnership System to strategically integrate programs.

[291] If the HWC MACT standards are the only applicable CAA requirements, however, then there would be no other components of a title V permit for the source.

[292] Some States have successfully issued "one-stop" multimedia permits which include provisions from both the CAA and RCRA programs in a single permit. However, it is EPA's understanding that these permits cite both the RCRA and CAA authority; thus, the potential for enforcement under both statutes still remains.

sources under the CAA to title V permitting is discussed in a separate section.

1. How Are the Title V Permitting Requirements Applicable?

We intend, by placing the new standards only in 40 CFR part 63 and not cross-referencing them in RCRA regulations, to rely on existing air programs to implement the new requirements, including operating permits programs developed under title V. All hazardous waste combustors subject to the MACT standards promulgated in this rule will thus be subject to title V permitting requirements for air emissions and related operating requirements (this includes hazardous waste combustors that are considered area sources under the CAA, as discussed in more detail below). In this rule, we are not amending any of the existing air permitting procedures. The procedures of 40 CFR part 71 for federal operating permits, or a State title V program approved under part 70, will remain applicable. Thus, all current CAA requirements governing permit applications, permit content, permit issuance, renewal, reopenings and revisions will apply to air emissions from hazardous waste combustors pursuant to promulgation of the hazardous waste combustor MACT standards.[293]

The public participation requirements for title V permits in parts 70 and 71, such as allowing an opportunity for public hearing and public comments on draft permits, also apply (see 40 CFR 70.7(h) and 71.11). We are committed to enhancing public participation in all of our programs. In 1996, we published a guidance manual on public involvement in the RCRA program intended to improve cooperation and communication among all participants in the RCRA permitting process (*RCRA Public Participation Manual*, EPA530-R-96-007, September 1996). Although the Manual is written in the context of the RCRA program, the principles are common to all program areas. For example, the Manual encourages early and meaningful involvement for communities and open access to information. It also acknowledges the important role of public participation in addressing environmental justice concerns. Since these principles are applicable in all situations, we encourage air programs and sources subject to the hazardous waste combustor MACT standards to refer to the RCRA manual for additional guidance on implementing effective public participation activities.

2. What Is the Relationship Between the Notification of Compliance and the Title V Permit?

The hazardous waste combustor MACT standards promulgated in this final rule include emissions limitations for several hazardous air pollutants, as well as detailed compliance, testing, monitoring, and notification requirements. Under these provisions, you not only demonstrate compliance with the emissions limitations, but also demonstrate that you have established operating requirements and monitoring methods that ensure continuous compliance with those limits. These demonstrations are made during a comprehensive performance test and subsequently documented in an NOC.

We are requiring, in § 63.1210(f), that you comply with the general provisions governing the NOC codified in § 63.9(h). Those provisions specify that in addition to describing the air pollution control equipment (or method) for each emission point for each hazardous air pollutant, the NOC also must include information such as: methods that were used to demonstrate compliance; performance test results; and methods for determining continuous compliance (including descriptions of monitoring and reporting requirements and test methods). We also are requiring in § 63.1207(j) that you comply with the all of the operating requirements specified in the NOC upon submittal to the Administrator.

Although these requirements are self-implementing, in that you must comply in accordance with the time frames set forth in today's rule, the requirements are ultimately implemented through title V operating permits (see 40 CFR parts 70 and 71). Section 63.1206(c)(1) specifies that: (1) You can only operate under the operating requirements specified in the DOC or NOC (with some exceptions as laid out in the regulations); (2) the DOC and NOC must contain operating requirements including, but not limited to, those in § 63.1206 (compliance with the standards and general requirements) and § 63.1209 (monitoring requirements); (3) operating requirements in the NOC are applicable requirements for the purposes of 40 CFR parts 70 and 71; and, (4) operating requirements in the NOC must be incorporated into the title V permit. In addition, because title V permits can only be issued if, among other conditions, "the conditions of the permit provide for compliance with all applicable requirements" (see §§ 70.7(a)(1)(iv) and 71.7(a)(1(iv)), parts 70 and 71 are clear that title V permits must contain the operating requirements documented in the NOC.

As mentioned above, you must comply with all operating requirements specified in the NOC as of the postmark date when the NOC is submitted to the Administrator. Operating requirements documented in the NOC must be included in your title V permit—either through initial issuance if you do not yet have a title V permit, or through a permit revision if you already have a permit. Including information from the initial NOC in title V permits should not create the potential for any compliance conflicts. Because it is the first time the NOC operating requirements are incorporated into the permit, there would be no requirements already on permit with which the NOC would conflict.

However, the potential for compliance conflicts could be created when a subsequent NOC is submitted. For example, you are required to conduct periodic comprehensive performance testing (see § 63.1207(d)(1)). Subsequent to each test, you must submit another NOC to the Administrator. Because of the dynamics of the testing and permitting cycles, it is possible that once you have information from the initial NOC in the permit, you could find yourself, after subsequent testing, in a situation where there might be potentially conflicting requirements with which you must comply (i.e., requirements in the title V permit and requirements in the most recently submitted NOC). This might occur, for example, if any of the operating requirements changed from the previous test.[294] The potential for compliance conflicts that might arise from this situation can be avoided, however, by following the guidance presented below.

The requirements in parts 70 and 71 govern the timing and procedures for permit issuance, revisions, and renewals, and you should refer to those requirements when obtaining or maintaining your permit. For today's rule, we provide guidance on what we recommend as to how operating requirements in the NOC should be incorporated into title V permits.[295]

[293] Requirements of other CAA permitting programs, such as construction permits, will continue to apply, as appropriate, to the HWC's sources subject to today's rule.

[294] On the other hand, if the limits did not change, there would be no conflict between the NOC and the permit.

[295] We are recommending this approach as guidance in the preamble, but not including any associated regulatory provisions. This guidance is

Continued

For incorporating information from an initial NOC into a title V permit, when you have an existing title V permit, we recommend that you and your permitting agency follow the procedures for significant modifications. The primary rationale for using these procedures is to afford the public an opportunity to review all of the information pertinent to your compliance obligations. We want to ensure a level of public involvement when including operating requirements in title V permits that is commensurate with that under RCRA. In RCRA, operating parameters are initially developed pursuant to trial burns and incorporated into permits either through initial issuance (in the case of facilities operating under RCRA interim status) or through a RCRA class 2 or 3 permit modification (in the case of new facilities). In either situation, significant opportunities exist for public review and input parallel to those under initial title V permit issuance or significant permit modification procedures.

With regard to a subsequent NOC developed pursuant to periodic performance tests, we prefer an implementation scheme for this rule that avoids unnecessary permit revisions. Thus, we recommend that you coordinate your five-year comprehensive performance testing schedule with your five-year permit term to the extent possible. This would allow changes in the NOC to be incorporated into the permit at renewal rather than through separate permit revisions. This also helps to minimize the number of permit revisions, as well as, the likelihood of having two sets of requirements with which to comply.

We recognize, however, that such coordination may not always be possible or feasible. At times, it may be necessary to include information from the most recent NOC through a permit revision. We expect that this will be accomplished using, at most, the minor permit modification procedures in § 70.7(e)(2) or § 71.7(e)(1). Keeping in mind that the information from the initial NOC was included either as part of the initial permit issuance or as a significant revision, the information was already subject to review by both the regulatory agency and the public. Thus, the public should have a clear understanding of your compliance obligations. The obligation to comply with the emissions limitations in §§ 63.1203, 63.1204, or § 63.1205 does not change even if any of the associated compliance information, such as operating limits, is revised pursuant to subsequent performance tests. Given our experience in regulating (under RCRA) the types of sources subject to today's MACT standards, we do not expect the information in a NOC to change significantly over time. We have been regulating these sources for almost twenty years; the testing and monitoring requirements we are promulgating in this rule reflect the "lessons learned" over time. Thus, the initial set of compliance parameters are likely to need primarily minor changes over time. You and your regulatory agency also are experienced in setting operating parameter limits and monitoring systems to ensure compliance with performance standards. Again, this expertise and experience suggests that primarily minor adjustments will need to be made. In light these factors, we are confident that changes in the NOC may be appropriately incorporated into title V permits using the minor permit revisions procedures. Furthermore, regulatory agencies are obligated under § 63.1206(b)(3) to make a finding of compliance based on performance test results. This requirement provides an additional administrative safeguard to ensure that you are setting the proper operating limits.

The minor permit modification process will allow you to meet your compliance obligations under § 63.1207(j) and begin to comply with the conditions in the NOC upon submittal (i.e., post-mark). Under §§ 70.7(e)(2)(v) and 71.7(e)(1)(v), you may make the change proposed in the minor permit modification application immediately after filing such application. Following this, you must comply with both the applicable requirements governing the change and the proposed permit terms and conditions (i.e., the information from the NOC that you are incorporating into your permit). The provisions in this section also ensure that you will not be in the position of having to choose between compliance with the NOC or compliance with your permit because this section also specifies that during this time period, you need not comply with the existing permit terms and conditions you seek to modify.[296] Since the NOC is submitted to the Administrator once you have a title V permit (see § 63.9(h)(3)), we expect that you will submit the NOC together with a minor permit modification application. Any modifications added to the permit through this process can be reviewed by the public at the time of permit renewal.

We encourage permitting authorities to develop permits in a way that minimizes the need for future permit revisions and is consistent with the requirements in parts 70 and 71. For example, you may request that your permitting authority develop a permit that contains alternative operating scenarios. This would allow you to alternate among various approved operating scenarios while concurrently noting the change in your operating record.

3. Which RCRA Permitting Requirements Are Applicable?

The RCRA permitting requirements particular to incinerators and boilers and industrial furnaces are found in 40 CFR 270.19, 270.22, 270.62, and 270.66. These permitting requirements apply to new facilities, to those operating under interim status while they pursue a permit, and to sources seeking to renew their permits. In today's final rule, we amend the introductory text in each of these sections to reflect that RCRA permitting requirements for hazardous waste combustor air emissions and related operating parameters will not apply once you demonstrate compliance with the requirements of the new MACT standards by completing a comprehensive performance test and submitting a NOC to the Administrator.[297] The timing for the deferral of the RCRA permitting requirements is consistent with the timing in today's rule for the deferral of applicable standards in 40 CFR parts 264 and 265.

Even though we rely on the title V permitting program to address air emissions from hazardous waste combustors, we still need RCRA permits at these sources to address: (1) Other RCRA regulations applicable to all types of RCRA units, including hazardous waste combustors, that are not duplicated under the CAA; (2) any risk-based emissions limits and operating parameters, as appropriate; and (3) other RCRA units at the facility. Also, new facilities (including new hazardous waste combustor units) must obtain RCRA permits prior to starting construction. Thus, the remaining RCRA permitting requirements in 40 CFR part 270 governing permit applications and permit content continue to apply. These

essentially an interpretation of the current part 70 and 71 rules.

[296] If, however, the source fails to comply with its proposed permit terms and conditions during this time period, the existing terms and conditions it seeks to modify may be enforced against it (§§ 70.7(e)(2)(v) and 71.7(e)(1)(v)).

[297] The final rule language in these sections differs from that in the NPRM to reflect placement of the standards only in part 63 and deferral of RCRA controls to the air program.

include the provisions in §§ 270.10(k) and 270.32(b)(2), which together provide authority to require a facility owner or operator to submit information necessary to establish permit conditions and to impose site-specific conditions, including risk-based conditions, through the RCRA permit.

Even though you will still have two permits, the scope and subject matter of each are distinguishable. The title V permit will focus on the operation of the combustion unit (e.g., air emissions and related parameters) while the RCRA permit will continue to focus on the other basic aspects of hazardous waste management. The RCRA permit would thus include conditions to ensure compliance with relevant requirements in 40 CFR part 264, including: General facility standards; preparedness and prevention; contingency planning and emergency procedures; manifesting; recordkeeping and reporting; releases from solid waste management units; closure; post-closure; financial responsibility; corrective action; storage; materials handling; and air emissions standards for process vents and equipment leaks from tanks and containers.

The only time we foresee that conditions in both RCRA and title V permits may govern the same hazardous waste combustor operating parameters and limits is when there is a need to impose more stringent or more extensive risk-based conditions, e.g., under RCRA omnibus authority, to ensure protection of public health and the environment. This situation is discussed in greater detail in Part Three, Section IV (RCRA Site Specific Risk Assessment Decision Process).

4. What Is the Relationship of Permit Revisions to RCRA Combustion Permitting Procedures?

In June, 1994, we published a proposed rule for RCRA Expanded Public Participation and Revisions to Combustion Permitting Procedures (59 FR 28680, June 2, 1994). The proposal contained amended procedures for interim status combustion facilities during the trial burn period that were intended to make the procedures for interim status facilities more like those governing permitted facilities. We finalized the expanded public participation requirements (see section immediately below), but did not finalize the proposed permitting revisions. At the time we began to finalize the proposal, we were already committed to issuing comprehensive air emissions standards under MACT. It was anticipated that there would be overlap between the emissions standards in the proposed MACT rule and the combustion permitting procedures in the June 1994 proposed rule. It did not make sense to finalize provisions in one rulemaking effort only to propose changing them yet again in another rulemaking effort. Now, given the approach being adopted in today's final rule to permit hazardous waste combustor air emissions under title V of the CAA, there is no longer as strong a need to pursue the amended procedures for RCRA permitting in the June 1994 proposal. We do not, therefore, intend at this time to finalize these proposed permitting amendments.

5. What Is the Relationship to the RCRA Preapplication Meeting Requirements?

In 1995, we finalized the expanded RCRA public participation requirements (60 FR 63417, December 11, 1995). These included requirements for a facility to advertise and conduct an informal meeting with the neighboring community to discuss anticipated operations prior to submitting a RCRA Part B permit application. Since hazardous waste combustors subject to the new MACT standards (and title V permitting) still need RCRA permits for other hazardous waste management activities, you are still subject to the RCRA preapplication meeting requirements in 40 CFR 124.31. Even though operations and emissions associated with the combustor unit are now to be addressed primarily under CAA requirements, we anticipate that the public will continue to exhibit a great deal of interest in combustor activities at RCRA meetings. They may not always be familiar with our administrative "boundaries" dictated by the various environmental statutes. Given this potential lack of familiarity, and because combustor units and emissions are already discussed at these meetings, we strongly encourage you to continue including combustor unit operations in discussions during RCRA preapplication meetings. Furthermore, conditions for hazardous waste combustor activities may sometimes be imposed under RCRA, for example, in cases where the results of a site-specific risk assessment indicate a need for conditions more stringent or more extensive than those imposed under MACT. You should be prepared to discuss the site-specific risk assessment process and how it may result in additional conditions being included to their RCRA permits.

All other public participation requirements in 40 CFR part 124 associated with the RCRA permitting process continue to apply. These include requirements for public notice at application submittal, public notice of the draft permit, opportunity for public comments on the draft permit, and opportunity for public hearings. These requirements also are explained in the *RCRA Public Participation Manual* (EPA530-R-96-007, September 1996), which provides guidance on how to implement RCRA public participation requirements, as well as, recommendations on how to tailor public involvement activities to the situation at hand. For example, if the community around a facility does not speak English as a primary language, the manual encourages use of multilingual fact sheets. As mentioned previously, we encourage you and States to apply the principles contained in the RCRA manual to hazardous waste combustor MACT compliance and title V activities as well.

C. Is Title V Permitting Applicable to Area Sources?

Under today's rule, hazardous waste combustors meeting the definition of an area source will be subject to today's MACT standards (see discussion in Part One, Section III.B). As discussed in the May 1997 NODA, under § 63.1(c)(2), area sources subject to MACT are subject to title V permitting as well, unless the standards for that source category (e.g., subpart EEE for hazardous waste combustors) specify that: (1) States will have the option to exclude area sources from title V permit requirements; or (2) States will have the option to defer permitting of area sources. We received several comments on our NODA discussion (see 62 FR 24215) on the issue of subjecting area sources to title V permitting. The comments were fairly evenly split—several supported requiring area sources to obtain title V permits, while several were against it. After considering the comments, we have chosen not to provide the option to the States to exclude hazardous waste combustor area sources from title V permitting requirements or to defer permitting of these sources.

Commenters that support the Agency's position affirm that title V permits serve an important role to incorporate all requirements applicable to a source in one enforceable permitting document. They maintain that the compliance certifications and opportunities for public involvement inherent in the title V program will serve a useful and valuable public service. Other supporters note that requiring all hazardous waste combustors to obtain title V permits will help to ensure that the permits are both consistent and adequate. The idea of

consistency being a desirable end result is echoed by others as well. One commenter points out that area sources in several other source categories are not exempt from title V permitting requirements, and recommends that hazardous waste combustor area sources also be subject to title V to maintain consistency with the rest of the MACT program. Finally, some commenters state that if the Agency were not to pursue title V permitting for hazardous waste combustor area sources, then the Agency would have to strengthen the nontitle V permitting programs with respect to public involvement and agency approval of modifications relating to facility emissions.

We agree with these points. Title V permits clarify your regulatory obligation, thereby making it easier for you to keep track of your many compliance obligations across several air programs. Clarifying the regulatory obligations improves compliance in many cases; we have seen an increase in compliance among air sources with the advent of the title V permitting program. For example, through the process of applying for and issuing title V permits, applicable requirements of which a source is unaware or with which it is found to be out of compliance are identified. Once these requirements are included in a title V permit, the source must certify compliance with these requirements both initially and then on an annual basis.

We concur with commenters about the benefits of the public involvement opportunities afforded by the title V permit program. Our experience in the RCRA combustion program has shown that many of the sources that would fall into the area source classification (e.g., some commercial incinerators and cement kilns burning hazardous waste as fuel) are the ones in which the public is generally most interested. Subjecting hazardous waste combustor area sources to title V permitting will ensure that the public will continue to be involved in permit decisions under the CAA, as they have been under RCRA. For example, the public will have an opportunity to comment on and request a public hearing for a draft title V permit. They have access to State or Federal court to challenge title V permits, depending upon whether the permit is a part 70 or part 71 permit. Title V also provides greater access to information about sources in many cases. Under title V, States and EPA cannot deny basic information about sources to citizens unless it is protected as confidential business information. Conversely, there could be disparity in what information citizens might be able to obtain under State non-title V operating permits.

Consistency is a key objective as well. Part 70 sets out the minimum criteria that a State program must meet. If a State fails to develop and implement a program that meets these minimum criteria, then a part 71 federal operating permits program is put into place. These minimum criteria provide for consistency across State and Federal title V permitting programs, which might not occur under other State air permitting programs. Consistency within CAA programs is not the only concern. We also are, as part of our approach to integrating regulation of these sources under RCRA and the CAA, striving to maintain consistency with how sources have been regulated under RCRA. Under RCRA, all of the sources that would fall into an area source classification are currently treated the same as the sources that are classified as major under the CAA. It is appropriate to continue treating all hazardous waste combustor sources in the same manner (i.e., to apply the same permitting requirements to all of these sources) under the CAA.

Commenters that do not support applying title V requirements to area sources generally base their position on three arguments. First, they argue that Congress had consciously differentiated between area and major sources when developing the CAA, so that there would be a strong incentive for facilities to limit emissions and thus avoid the additional requirements imposed on major sources. These commenters maintain that subjecting area sources to title V requirements would create a disincentive for these sources to minimize emissions. Secondly, they suggest that other CAA permitting mechanisms, such as federally enforceable state operating permits, might be more appropriate for the hazardous waste combustor area sources. One commenter notes that some sources have already invested a lot of time and effort working with permitting authorities to develop federally enforceable state operating permits that limit their potential to emit below major source levels, and that the Agency's action subjecting these sources to title V permits would render this work meaningless. Finally, they assert that this would be the first time the Agency did not provide the option to the States to either defer title V permitting for area sources or exempt them entirely, and they express concern about the precedent that would be set if the Agency were to start requiring area sources to obtain title V permits in this rule.

After careful consideration, we are not persuaded by these counter-arguments. Although the CAA does differentiate in some provisions between area and major sources, it did not specify that area sources should be exempt from the title V permitting program. On the contrary, it provides discretionary authority in section 502(a) for the Administrator to decide whether to exempt a source category, in whole or in part, from title V permitting requirements. Furthermore, the implementing regulations in 40 CFR 70.3(b)(2), 71.3(b)(2), and 63.1(c)(2) specify that the Administrator will determine whether to exempt any or all area sources from the requirement to obtain a title V permit at the time new MACT standards are promulgated. Clearly, the decision to subject area sources to title V permitting is intended to be made in the context of both the source category and the applicable standards. The exemption from title V may only be provided if compliance with the requirements would be "impracticable, infeasible, or unnecessarily burdensome." CAA section 502(a). Given that the hazardous waste combustors subject to today's rule, including those that may meet the definition of area sources, have all been subject to common permitting regulations under RCRA, subjecting these sources to title V permitting is not impracticable, infeasible, or unnecessarily burdensome. Furthermore, if we exempt area sources from title V permitting requirements, we would most likely have continued to apply RCRA permit requirements for stack emissions to these sources. Thus, the area sources would have been subject to dual permitting regimes (e.g., federally enforceable state operating permits under the CAA and RCRA permits) and the resulting burden associated with duplicative regulation. This would be contrary to a major goal of today's rule. In conclusion, we decided that it is appropriate to subject all hazardous waste combustor sources subject to today's MACT standards to title V permitting requirements. As noted earlier in this preamble, this is also consistent with the Congressional scheme under RCRA that mandates regulation of all hazardous waste combustors for all pollutants of concern.

Although we provided the option to defer title V permitting for some area sources subject to other MACT standards, this rule is not the first time we have not allowed States to defer area sources from title V requirements. See, e.g., 64 FR 31898, 31925 (June 14, 1999) (NESHAP for Portland Cement Manufacturing Industry to be codified at

40 CFR part 63, subpart LLL). Moreover, EPA regulations governing other categories of solid waste combustors under CAA section 129 do not differentiate between major and minor sources in imposing title V permitting requirements. See, e.g., CAA section 129(e); 40 CFR 70.3(a) and 70.3(b)(1), and 40 CFR 60.32e(i). Given that the decision to apply title V requirements is made in a specific context, we do not share commenters' concern about the precedent our approach might set for other situations. We will continue to evaluate each situation on its own merit. Finally, we do not agree with commenters that this approach will provide a disincentive to limit emissions because sources will still be "capped" by the emissions limits being promulgated in today's rule. Neither would progress already achieved in developing federally enforceable state operating permits be rendered meaningless, as suggested by some commenters. We anticipate that a source will likely be able to use the information gathered during the process of developing a federally enforceable state operating permit (e.g., information about its emissions and applicable requirements) in completing a title V application. Commenters appear to think that sources will have to start totally anew and without an ability to use past experience and results. This is neither a realistic nor practical view of how sources are likely to act.

Commenters opposed to subjecting hazardous waste combustor area sources to title V had also noted that these sources would be receiving RCRA permits for the air emissions as well. This argument would have merit if we choose to promulgate the new standards in both CAA and RCRA regulations. Since we are promulgating the MACT standards only in the CAA regulations, however, requirements on air emissions from hazardous waste combustor area sources would not be included in RCRA permits.[298] Commenters also discount our position in the NODA about difficulties that would arise if an area source were to move from one permitting program to another as they make modifications to their emissions levels that could change their major/area source determination. They point to our "once in, always in" approach to MACT standards that is stringently applied. Under this approach, once a MACT standard goes into effect, a major source will always be regulated under that standard, even if it later decreases its emissions to below major source levels. This ensures that sources cannot routinely "flip" between being regulated or unregulated, which in turn means that sources would not be moving in and out of the title V permitting universe. The commenter was correct in raising this to our attention. We are not relying on this argument to support our decision to subject hazardous waste combustor area sources to the standards or to title V.

D. How will Sources Transfer from RCRA to MACT Compliance and Title V Permitting?

1. In General, How Will this Work?

As discussed in Section A (Placement of Standards and Approach to Permitting), we are deferring RCRA controls on hazardous waste combustor air emissions to the part 63 hazardous waste combustor MACT standards, which are ultimately incorporated into title V permits issued under the CAA. Promulgation of the new hazardous waste combustor MACT standards under the CAA does not, however, by itself implement this deferral or eliminate the need to continue complying with applicable RCRA requirements—either those in a source's RCRA permit or in RCRA interim status performance standards. These requirements include obligations for RCRA permitting (for example, interim status facilities will continue to be subject to RCRA permitting requirements, including trial burn planning and testing).

Therefore, today's rule adopts specific provisions that address the transition from RCRA permitting to the CAA regulatory scheme. As discussed in Section B.3 (Applicability of RCRA permitting requirements), the requirements in §§ 270.19, 270.22, 270.62, and 270.66 do not apply once a source demonstrates compliance with the standards in part 63 subpart EEE by conducting a comprehensive performance test and submitting an NOC to the regulatory agency.[299] In this section, we discuss how regulators can implement the deferral from RCRA to hazardous waste combustor MACT compliance and title V permitting.

a. What Requirements Apply Prior to Compliance Date? You have three years following promulgation of the MACT standards to achieve compliance with the emissions standards. However, the rule is effective shortly after promulgation. During the approximately three years between the effective date and the compliance date, you will be subject to applicable requirements for hazardous waste combustor MACT compliance and title V permitting. For example, there are compliance-related requirements in 40 CFR part 63 subpart EEE that are separate from the actual standards for emissions levels, such as those in §§ 63.1210(b) and 63.1211(b) for submitting a Notice of Intent to Comply and a progress report, respectively. Requirements in 40 CFR parts 70 and 71 for operating permit programs developed under title V will also apply. These include requirements governing timing for submitting initial applications, reopenings to include the standards, and revisions to incorporate applicable requirements into title V permits. The interface between an NOC and the title V permit has already been discussed. Consequently, our discussion on implementing the deferral of RCRA controls focuses on the transition away from RCRA permits and permit processing once a facility demonstrates compliance with the standards through a comprehensive performance test and submits a NOC to the regulatory agency.

Many of the activities undertaken during the three year compliance period play a role in implementing the transition of RCRA controls to MACT compliance and title V. For example, some of you may have to make changes to their design or operations to come into compliance with the new standards. If you have a RCRA permit, you may need to modify the RCRA permit to reflect any of these changes before they are actually made. This may be necessary to remain in compliance with the RCRA permit while setting the stage for demonstrating compliance with CAA MACT requirements. We urge you (the source) to seek guidance from your RCRA permitting authorities as early as possible in this process. As part of our "fast track rule" (see 63 FR 33781, June 19, 1998), we promulgated a streamlined process in 40 CFR 270.42(j) for modifying the RCRA permit, so that you can make these necessary changes and begin operating in accordance with the new limits before the compliance date arrives. To take advantage of the streamlined process, however, you must first comply with the Notice of Intent to Comply requirements in § 63.1210. The Notice of Intent to Comply requirements obligate you to advertise and conduct an informal meeting with the neighboring community to discuss plans to comply with the new standards, and to subsequently provide information about

[298] The exception would be, as discussed earlier, cases where States, at their own choosing, have incorporated the HWC MACT standards into their State RCRA programs.

[299] If, however, there is a need to collect information under § 270.10(k) then the permitting authority may require, on a case-by-case basis, that facilities use the provisions found in these sections.

these plans to the regulatory agency.[300] We anticipate discussion at this meeting will include modifications to the RCRA permit that must be processed before you can start upgrading equipment to meet the emissions limits set by MACT. The goal of these activities is to ensure that by the end of the three-year compliance period, you will be in compliance with both the MACT standards and their RCRA permits or interim status requirements.

b. What Requirements Apply After Compliance Date? After the compliance date, a transition period exists during which there will be, in effect, two sets of standards concerning emissions from hazardous waste combustors: (1) The MACT standards in 40 CFR part 63; and (2) the performance standards that are still in the RCRA permit or in the 40 CFR part 265 interim status regulations. During this period, in cases where operating parameters and limits are addressed by both programs (MACT and RCRA), you must comply with all applicable parameters and limits; those which are more stringent will govern. We anticipate that the MACT standards will be compatible with the RCRA performance standards, although in some cases the DOC is likely to set narrower or different operating conditions. Thus, in complying with the MACT standards, you also will comply with corresponding conditions in the RCRA permit or in the RCRA interim status regulations. However, at some sites, certain RCRA permit conditions may be more stringent than the corresponding MACT standards or may establish independent operating requirements. Some potential reasons why such a situation would occur are discussed in the May 2, 1997 Notice of Data Availability (62 FR 21249, 5/2/97). In these situations, you must comply with the more stringent or more extensive conditions in the RCRA permit.

We also note that there may be situations where it is not clear whether a RCRA compliance requirement is less stringent than a MACT requirement. This can occur, for example, when the two compliance requirements have different averaging periods and different numerical limits. In this situation, we recommend that the source coordinate with permitting officials early in the MACT process, perhaps when the source submits RCRA permit modification pursuant to the fast-track rulemaking, in order to determine which requirement is more stringent. We believe the permitting officials should give sources an appropriate level of flexibility when making this determination.

Our approach of placing the MACT air emission standards for hazardous waste combustors in 40 CFR part 63 subpart EEE and not including them, even by reference, in the RCRA regulations means that the air emissions must ultimately be incorporated into title V permits issued under the CAA. To completely implement the deferral of RCRA controls, conditions governing air emissions and related operating parameters should also be ultimately removed from RCRA permits. (For the special case of risk-based conditions derived from RCRA omnibus authority, see earlier discussions.) Similarly, hazardous waste combustors that are in the process of obtaining RCRA permits will likely need to have the combustor air emissions and related parameters transitioned to MACT compliance and title V permits at some point.

We intend to avoid duplication between the CAA and RCRA programs. We encourage you and regulators to work together to defer permit conditions governing air emissions and related operating parameters from RCRA to MACT compliance and title V, and to eliminate any RCRA provisions that are no longer needed from those permits. As discussed below, we are adopting a provision in today's final rule to help permitting authorities accomplish this task in the most streamlined way possible. The RCRA permits will, of course, retain conditions governing all other aspects of the hazardous waste combustor unit and the rest of the facility that continue to be regulated under RCRA (e.g., general facility standards, corrective action, financial responsibility, closure, and other hazardous waste management units). Furthermore, if any risk-based site-specific conditions have been previously included in the RCRA permit, based either on the BIF metals and/or hydrochloric acid/chlorine requirements[301] or the omnibus authority, the regulatory authority will need to evaluate those conditions vis-a-vis the MACT standards and the operating parameters identified in the NOC. If the MACT-based counterparts do not adequately address the risk in question, those conditions would need to be retained in the RCRA permit or included within an appropriate air mechanism. In those limited cases, sources and permitting agencies may instead agree to identify the RCRA limit in the title V permit. Since one goal of the title V program is to clarify a source's compliance obligations, it will be beneficial, and convenient, to acknowledge the existence of more stringent limits or operating conditions derived from RCRA authority for the source in the title V permit, even though the requirements would not reflect CAA requirements. We strongly encourage Regional, State, and local permitting authorities to take advantage of this beneficial option.

2. How Will I Make the Transition to CAA Permits?

In the May 1997 NODA, we expressed our intent to rely on the title V permitting program for implementation of the new standards, and asked for comments on how and when the transition from RCRA should occur (see 62 FR 24250, May 2, 1997). We are amending the regulations in 40 CFR part 270 to specify the point at which the RCRA regulatory requirements for permitting would cease to apply. However, once you have a permit, you must comply with the conditions in that permit until they are either removed or they expire. Many commenters expressed an interest in what happens to conditions in a RCRA permit once the new standards are published. We received a variety of suggestions, but a common thread was a request for EPA to lay out a clear path through the permit transition process. While we recognize the desirability of having a uniformly defined route for getting from one permit to another, it is important to provide flexibility to allow a plan that makes the most sense for the situation at hand. There is not a "one size fits all" approach that would be appropriate in all cases. Thus, we are not prescribing a transition process via regulation, but providing guidance in the following discussion which we hope will assist regulatory agencies in determining a route that makes the most sense in a given situation. Given the level of interest expressed, we will, in the ensuing discussion, map out a process for implementing the deferral of air emissions controls from RCRA to MACT compliance and title V permitting. We address key considerations that should factor into the decision of how and when to implement the deferral of permit conditions.[302]

[300] The requirements for providing notice of and conducting the public meeting as part of the Notice of Intent to Comply provisions are based on the RCRA preapplication meeting requirements in 40 CFR 124.31.

[301] The BIF limits for metals under RCRA are based on different level of site-specific testing and risk analysis (Tier I through Tier III). It is possible that, if it were based on the more stringent analysis, a RCRA BIF limit could be more stringent than the corresponding MACT standard.

[302] Although we are not mandating an approach to transition by regulation, we are, as discussed in Section 2, How Should RCRA Permit Be Modified?

In identifying key aspects of the transition, we seek the optimal balance of three basic considerations raised by commenters and other stakeholders. The considerations are to: (1) Address public perception issues associated with taking conditions out of a RCRA permit; (2) minimize the amount of time a source might be potentially subject to overlapping requirements of RCRA and the CAA (and thus subject to enforcement under both RCRA and the CAA for the same violation); and (3) provide flexibility to do what makes the most sense in a given situation. The first two considerations are primarily factors of time—when should conditions be removed from the RCRA permit? The third consideration is more a factor of how—what mechanism should be used for removing RCRA conditions?

Why do these particular considerations carry such importance? As for the first, one of the points emphasized in our National Hazardous Waste Minimization and Combustion Strategy is the importance of bringing hazardous waste combustors under permits as quickly as possible. The Strategy has been driving EPA Regions and authorized States to place their top permitting priority on the hazardous waste combustor universe. Consequently, the Strategy may have created a certain perception on behalf of the public about the importance of the actual permit document. The actual issue we are trying to address here is more of a concern about a potential break in regulatory coverage of a source as it transitions from RCRA permitting requirements to the CAA regulatory scheme.

While it might appear that we are altering the policy expressed in the Strategy if we allow removal of conditions from a RCRA permit before the title V permit is in place, it is not the actual permit document that is of paramount importance. Rather, our focus is and has been on maintaining a complete and enforceable set of operating conditions and standards. One of the underlying tenets of the position taken on permitting in the Combustion Strategy was a commitment to bring hazardous waste combustors under enforceable controls that demonstrate compliance with performance standards. Under RCRA, the permit was the available vehicle to achieve better enforcement of tighter conditions than exist in interim status.

We remain committed to this underlying tenet. However, the mechanism for achieving this objective under the CAA is not necessarily the title V permit. In RCRA, the permitting process provides the vehicle for the regulatory agency to approve testing protocols (including estimated operating parameters), to ensure completion of the testing, and to develop final operating parameters proven to achieve performance standards. The final RCRA permit is the culmination of these activities. Under MACT, these activities do not culminate in a permit, but in a NOC. The development of the NOC is separate from the development of the title V permit. The title V permitting process is primarily a vehicle for consolidating in one document all of the requirements applicable to the source. Conversely, it is the NOC that contains enforceable operating conditions demonstrated through the comprehensive performance test to achieve compliance with the hazardous waste combustor MACT standards (which are generally more stringent than the RCRA combustion performance standards). Thus, the NOC captures the intent of the Strategy with regard to ensuring enforceable controls demonstrated to achieve compliance with relevant standards are in place.

Another basis for our position on permitting in the Combustion Strategy is the level of oversight by the regulatory agency during the permitting process, which is typically greater than that which occurs during interim status. For example, although BIFs operating under interim status are required to conduct compliance testing and subsequently operate under conditions they identify in a certification of compliance, there are no requirements for the regulatory agency to review and approve compliance test plans or results. On the other hand, oversight by the regulatory agency is more intensive during the permitting process, *e.g.*, through the trial burn planning (including regulatory approval of the trial burn plan), testing, and development of permit conditions. Although the process required for interim status BIFs under RCRA may, at first, seem analogous to the CAA MACT process, *i.e.*, sources being required to conduct comprehensive performance tests and subsequently operate under conditions in an NOC, there is a significant difference. The difference is the level of oversight that occurs in the MACT process. According to the MACT requirements in 40 CFR 63.1207(e) and 63.1206(b)(3), the regulatory agency must review and approve the performance test protocol and must make a finding of compliance based on the test results that are reported in the NOC. The NOC consequently represents a level of agency oversight that is actually more analogous to the RCRA permit process than to interim status procedures.

An additional reason for the importance, under the Combustion Strategy, of bringing hazardous waste combustors under permits was to allow for the imposition of additional permit conditions where necessary to protect human health and the environment. In general, these conditions are established based on the results of a site-specific risk assessment and imposed under the RCRA omnibus authority. This objective will continue to be met even though we are deferring regulation of hazardous waste combustor air emissions, in general, to the CAA. Coming into compliance with the more stringent and more encompassing MACT standards will accomplish part of the Combustion Strategy's goal of improved protection. For any cases where the protection afforded by the MACT standards is not sufficient, the RCRA omnibus authority and RCRA permitting process will continue to be used to impose additional conditions in the RCRA permit (or, as discussed earlier, in a title V permit).

With regard to the remaining considerations, we seek here to reduce duplicative requirements across environmental media programs (*i.e.*, air emissions under the CAA and RCRA). This objective to reduce duplication is behind our goal of minimizing the amount of time a source might be potentially subject to dual permitting and enforcement scenarios. In order to allow for common sense in implementing environmental regulations, we need to provide flexibility here to do what makes sense in a given situation. We have provided this flexibility in today's rule by not prescribing only one process for transitioning from RCRA to the CAA.

3. When Should RCRA Permits Be Modified?

We identified two options in the May, 1997, NODA for when conditions should be ultimately removed from RCRA permits (see 62 FR 24250). Our preferred option at the time is to wait until the source had completed its comprehensive performance test and the standards had been included in its title V permit. The alternative option we identified would be to modify the RCRA permit once the facility submits the results of its comprehensive performance test.

below, providing a tool in the RCRA permit modification table in 40 CFR 270.42, Appendix I, that may be used to assist regulators and sources in effecting the transition.

Of the comments that spoke to the timing issue, some advocate waiting for the title V permit, but most opposed this position. The majority of commenters favor effecting the transition either on the compliance date, since we had said in the NODA that the pre-NOC would be due to the regulatory agency on that date [303] and would contain enforceable conditions, or upon submittal of the NOC, since it contains enforceable operating conditions demonstrated to achieve compliance with the standards. All three of these approaches are identified in the time line shown in Figure 1. Readers will note that the time line shows two potential points for the title V permit to be issued (options 1A and 1B). Option 1A is based on the statutory time frames for issuing title V permits. Under this option, the title V permit may be issued prior to the compliance date for the new standards, but it might only include the standards themselves and a schedule of compliance. Under option 1B, the operating requirements in the NOC that actually have been demonstrated to achieve compliance would be included in the permit.

We evaluated each of the options in terms of the two timing-related considerations listed above: addressing the perception issue that stems from removing conditions from the RCRA permit (which, as discussed above, is really a concern about a break in regulatory coverage—*i.e.*, that there might be a period of time when the source would not have enforceable controls demonstrated to achieve compliance with stack emissions standards), and minimizing the amount of time sources would potentially be subject to the same requirement(s) under both RCRA and CAA. These considerations may not always be compatible. For example, one way to address the perception of creating a break in regulatory coverage would be to continue to place emphasis on the permit, rather than on the tenet behind the permit (of having enforceable controls that demonstrate compliance with performance standards). This would mean waiting to remove conditions from a RCRA permit until a source has demonstrated compliance with the MACT standards and incorporated the appropriate combustion operating requirements in its NOC into the title V permit (*i.e.*, option 1B). However, this approach would maximize the amount of time the source potentially would be subject to overlapping requirements under RCRA and the CAA. On the other hand, one way to address the overlapping requirements consideration would be to allow removal of conditions from the RCRA permit at the time the standards are promulgated. But, this would create a time period during which the source would not have enforceable controls proven to achieve compliance, which would not address the concern about avoiding a break in regulatory coverage. Clearly neither of these extremes can provide a good balance between the two timing-related considerations.

BILLING CODE 6560–50–P

[303] We are adopting a DOC (previously the pre-NOC) requirement in today's final rule, but it is amended from how we presented it in the NODA (as discussed in Part Five, Section IV). Rather than submitting the DOC to the regulatory agency, a source must maintain it in their operating record. We encourage source owners and operators to set up the operating record in an unrestricted location that is reasonably accessible by the public.

FIGURE 1:

HAZARDOUS WASTE COMBUSTOR MACT IMPLEMENTATION TIME LINE: OPTIONS FOR TIMING OF PERMIT TRANSITION

				Option 1A	*Option 2*		*Option 3*	*Option 1B*	
HWC MACT rule published	NIC due to regulatory agency		Progress report due to regulatory agency	Performance test plans due	DOC in operating record [3]	Notification of test plan approval or intent to deny	Performance tests completed	NOC, including test results, due to regulatory agency	
Year 0 EFFECTIVE DATE	**Year 1**	**Year 1.5**	**Year 2**	**Year 2.5**	**Year 3 COMPLIANCE DATE**	**Year 3.25**	**Year 3.5**	**Year 3.75**	**Year 4.5 [4]**
	Title V permit applications due to permitting authority [1]	Reopenings complete for sources with 3 or more years left in permit term		Title V permit decisions made [2]				Revise title V permit to include NOC	

Notes:

1/ Sources newly subject to title V as a result of the hazardous waste combustor (HWC) MACT rule have 12 months to submit applications. Sources that have title V permits with a remaining permit term of 3 or more years when the HWC MACT rule is promulgated must reopen the permit to address HWC MACT. Such a reopening must be completed within 18 months of rule promulgation. Sources with title V permits with less than 3 years remaining in the permit term do not have to reopen; they can wait until renewal to address HWC MACT. However, in the interim, sources must meet the HWC MACT requirements.

2/ By statute, permitting authorities have 18 months to act on title V applications, if they are submitted after the first full year of a title V permit program. This means that decisions on title V applications or reopening requests submitted at Year 1 would be made by Year 2.5 -- still a year before sources conduct the performance test (which

(1) provides operating parameters for the unit, (2) demonstrates compliance with the standards, and (3) provides data for the notification of compliance (NOC)) However, permitting authorities are behind schedule in issuing title V permits; thus, we cannot assume that permits will have been issued by this point. We also cannot assume they will not be issued, because the permitting authorities may "catch up" with their schedule.

3/ Although the source is subject to enforceable *requirements* from the time of MACT promulgation (e.g., requirements for the Notice of Intent to Comply (NIC), the progress report, performance tests, and so on), this is the first point at which the source is subject to enforceable *operating conditions* (those contained in the DOC maintained in the source's operating record); however, these conditions have not yet been demonstrated to actually achieve the standards.

4/ It could take up to nine months to incorporate significant permit revisions (see 40 CFR 70.7(e)(4)(ii) and 71.7(e)(3)(ii)).

BILLING CODE 6560–50–C

We evaluated each option to determine which most effectively balances the relevant issues. Options 1A and 1B focus primarily on tying the transition timing to title V permitting. Option 2 links the timing for transition to the DOC (previously called the pre-NOC). Option 3, which we are recommending be followed, ties transition to submittal of the NOC.

a. Option 1A. This option is a variation of an option discussed in the May, 1997, NODA. There we stated, "The Agency's current thinking is that the RCRA permit should continue to apply until a facility completes its comprehensive performance testing and its title V permit is issued (or its existing title V permit is modified) to include the MACT standards. The RCRA permit would then be modified to remove the air emissions limitations which are covered in the title V permit." (see 62 FR 24250). Although this description basically applies to option 1B, the discussion in the NODA might also have been interpreted to mean that once the standards are in a title V permit, the corresponding emissions limits should be removed from the RCRA permit. When reviewing the implementation time line in terms of the statutory and regulatory time frames governing the title V process, we found that sources might well have title V permits issued or modified to include the new standards a year before they ever conduct performance testing. Although the permit would likely include the standards and a schedule for complying with the new limits, it would not include any of the key combustion operating requirements demonstrated in the performance test. Thus, even though option 1A would seem to address the concern about a break in coverage because the title V permit would have been issued, in actuality, the underlying tenet of the Combustion Strategy—that the source have enforceable operating parameters proven to achieve the new standards—is not fully addressed.

b. Option 1B. This option calls for the NOC to be incorporated into title V permits before any conditions could be removed from RCRA permits. As discussed earlier, this approach would not be consistent with our goal of minimizing duplication across permitting programs, even though it was identified as our current thinking in the NODA. As discussed in the NOC/title V Interface Section, the initial NOC must be incorporated into the title V permit as a significant permit modification, which could add another nine months to the transition period. Moreover, commenters express concern over impacts that existing delays in title V permitting activities might have. Commenters wrote that given the tremendous volume of permits to be issued (hazardous waste combustors being just one small subset) there would be no way to predict how long it might take regulatory agencies to initially issue or modify title V permits to include the standards, or to modify permits to include NOCs, despite time frames set forth in the title V regulations. We agree that delaying removal of air emissions and related parameters from RCRA permits until this occurs would unnecessarily extend the amount of time sources might be subject to overlapping requirements. As pointed out by commenters, having overlapping requirements may present technical and administrative difficulties. Examples of technical difficulties include, but are not limited to, the potential for conflicting requirements with regard to testing, monitoring, and compliance certifications. Examples of administrative difficulties include, but are not limited to, permit maintenance issues stemming from different permit modification procedures and appeals procedures.

c. Option 2. Option 2 reflects the time frame suggested by some commenters for effecting the transition upon submittal of the DOC, which, under the NODA discussion, would have been due to the regulatory agency on the compliance date (note: commenters appear to use the terms "compliance date" and "effective date" interchangeably, but they are quite different). Basing transition on the DOC was still a viable option to consider, even with our amended approach of having the source maintain the DOC in its operating record. The DOC contains enforceable operating conditions for key combustion parameters that the source anticipates will achieve compliance with the new standards. Although the source would have had to comply with other enforceable part 63 requirements by this point (*e.g.*, requirements for the Notice of Intent to Comply, the progress report, and the performance test plan), this would be the first point where a source might have overlapping requirements governing air emissions and related operating parameters—those in the DOC and those in the RCRA permit. Recommending removal of RCRA permit conditions at this point would thus minimize the potential for duplicative requirements. However, we conclude that it would still not address the perception issue adequately. Specifically, even though the source is subject to enforceable operating requirements, the source has not actually demonstrated compliance with the new standards.

d. Option 3. This option reflects the alternative approach we suggested in the May, 1997, NODA, as well as the preferred option of the majority of those who submitted comments on the timing issue. Under this recommended option, a source might well have a title V permit that addresses the new standards to some extent, even if just by including the standards themselves and a schedule for compliance. More importantly, the source will have conducted its comprehensive performance test, and submitted an NOC containing key operating parameters demonstrated to actually achieve compliance (and which are enforceable). Although there would be some time during which a source might have overlapping requirements (those in its NOC and those in its RCRA permit), this would be a finite and predictable amount of time. After considering all the comments, we conclude that option 3 best meets the dual challenges of ensuring the source is continuously subject to enforceable controls demonstrated to achieve compliance while minimizing the time you would be subject to permitting requirements for, and enforcement of, operating parameters and limits under both RCRA and the CAA. Therefore, today's rule adopts option 3.

We acknowledge that this approach does not completely eliminate concerns expressed by some commenters about the potential for facilities to be subject to dual enforcement mechanisms. Although this potential may exist during the brief transition period when a source has enforceable conditions under both CAA and RCRA, we will exercise enforcement discretion to avoid any duplicative inspections or actions, and we encourage States to do so as well. If any inspections are scheduled to occur during the brief transition period (which may be unlikely given how short this period is), the regulatory agency could conduct joint inspections by RCRA and CAA enforcement staff. Joint inspections might help to alleviate some of the potential for any duplicative efforts, either in terms of individual inspections targeting the same areas, or enforcement actions being taken under both RCRA and CAA authorities.

Under Option 3, you would most likely have a title V permit that addresses the hazardous waste combustor MACT standards to some extent. We expect that if the permit were issued prior to the comprehensive performance test and the submittal of the NOC, it would contain the standards

themselves, and related requirements in part 63 subpart EEE, such as the requirements to develop and public notice performance test protocols, to develop and maintain in its operating record the DOC with anticipated (and enforceable) operating limits, to conduct the comprehensive performance test and periodic confirmatory tests, and to submit the NOC, including the test results, to the regulatory agency.

The public would have had an opportunity to comment on the requirements in the title V permit as part of the normal CAA administrative process for issuing permits. Furthermore, the public would have had other opportunities to be involved in your compliance planning. For example, under the requirements for the Notice of Intent to Comply in § 63.1210(b), you would have had to conduct an informal meeting with the community to discuss how you intend to come into compliance with the new standards. You also are required in § 63.1207(e) to provide public notice of the performance test plan, so the public would have the opportunity to review the detailed testing protocol that describes how the operating parameters will achieve compliance.

4. How Should RCRA Permits Be Modified?

Once you have been issued a RCRA permit, you must comply with the conditions of that permit. Unless the conditions have been written into the permit with sunset (*i.e.*, automatic expiration) clauses governing their applicability, conditions remain in effect until the permit is either modified to remove them or the permit is terminated or expires. Promulgation of final MACT standards for hazardous waste combustors does not in itself eliminate your obligation to comply with your RCRA permit. In the May 1997 NODA, we stated that the RCRA permit would be modified to remove air emission limitations that are covered under MACT, but did not elaborate on what modification procedures would be followed. We solicited comments on how the transition should occur.

Of the commenters that addressed this issue, the recurring theme in the comments is for EPA to provide a mechanism that would impose minimal burden on sources and permit writers to process the modifications. Some express a desire to see the RCRA conditions removed in some automatic fashion once the MACT standards became effective. A mechanism for accomplishing this, suggests one commenter, would be to include a requirement in the final rule that would effect removal of conditions from all RCRA permits. One commenter suggests adding a new line item to Appendix I in § 270.42, designated as class 1, to address the transition to MACT. Another suggests a new line item designated as class 1 requiring prior agency approval. A third suggests a new line item designated as class 2.

We do not agree with eliminating conditions from all RCRA permits as part of a national rulemaking effort (*i.e.*, we do not agree with an "automatic" removal), particularly given the existence of authorized sate programs and state-issued permits. Permits may contain site-specific conditions developed to address particular situations, *e.g.*, conditions based on the results of a site-specific risk assessment. To ensure that the regulatory agency continues to meet its RCRA obligation to ensure protection of human health and the environment, these conditions may need to be evaluated on a case-by-case basis vis-a-vis the MACT standards before they are removed. If the RCRA risk-based conditions are more stringent or more extensive than the corresponding MACT requirements, the conditions must remain in the RCRA permit.

We do agree with commenters that there should be a streamlined approach to removing conditions from a RCRA permit that are covered by the hazardous waste combustor MACT regulations at the time an NOC demonstrating compliance is submitted to the regulatory agency. All other conditions would, of course, remain in the RCRA permit. Once you demonstrate compliance with MACT, we consider the transition from RCRA to be primarily an administrative matter since you will not only be subject to comparable enforceable requirements under CAA authority, but also will continue to be subject to any site-specific conditions under RCRA that are more stringent than MACT. Our intent is not to impose an additional burden on you or permit writers for a largely administrative requirement. To this end, we are adding a new line item to the permit modification table in 40 CFR 270.42, Appendix I, to specifically address the transition from RCRA to the CAA.

The approach of adding a new line item to the permit modification table is consistent with the comments we received pursuant to the May 1997 NODA. We agree with the commenter who suggests the new item be designated as a class 1 modification requiring prior Agency approval. This classification effectively balances the need to retain some regulatory oversight of the changes with the goal of minimizing the amount of time a source will be subject to regulation under both RCRA and the CAA for essentially the same requirements. A class 1 modification without prior approval, suggests one commenter, would not be sufficient to accomplish the transition with adequate confidence in proper regulatory coverage. Even though we consider the deferral to be an administrative matter, it is important to retain some level of regulatory oversight prior to effecting the change to provide the opportunity to address any differences between the two programs. On the other hand, the administrative exercise of transitioning from RCRA to the CAA does not warrant the extra measures (and attendant time commitment) of a class 2 modification procedure.

We are designating the new line item (A.8.) in the Appendix I table as class 1 requiring prior Agency approval. Thus, the administrative procedures associated with this mechanism will not be overly burdensome, yet RCRA permit writers will have an opportunity to confer with their counterparts in the air program prior to approving the request to eliminate conditions from the RCRA permit. This allows the RCRA permit writer to verify that you have completed the comprehensive performance test and submitted your NOC. In the few situations where site-specific, risk-based conditions have been incorporated into RCRA permits, it also provides the RCRA permit writer with the opportunity to review such conditions vis-a-vis the MACT standards to ensure any conditions that are more stringent or extensive than those applicable under MACT are retained in the RCRA permit. The public also would be informed that the transition from RCRA was being effected because the modification procedures require a notice to the facility mailing list. We recommend that the public notice for the RCRA permit modification also briefly mention that you have completed performance testing under the CAA, and are operating under enforceable conditions that are at least as stringent as those being removed from your RCRA permit.

One commenter offered suggestions for preparing the RCRA modification requests. We found some of these suggestions helpful and recommend that, to facilitate processing of the RCRA modification requests, you (1) identify in your modification requests which RCRA conditions should be removed, and (2) attach your NOC to the requests.

From another perspective, today's approach for removing conditions from the RCRA permit also may encourage

you to work closely with the air program to expeditiously resolve any potential or actual disagreements on the results of the comprehensive performance test and conditions in the NOC. The RCRA permit writer is not likely to approve the modification request until he or she has received confirmation that their air program counterpart is satisfied with your compliance demonstration under MACT (*i.e.*, that they have made the finding of compliance based on the test results documented in the NOC, as discussed in the following paragraph). Thus, you should continue to be subject to requirements under both RCRA and the CAA until the differences, if any, are resolved.

We are not including a requirement in either part 63 subpart EEE or part 270 specifically for the regulatory agency to approve the NOC before approving the RCRA modification request. We have incorporated the general provision for making a finding of compliance (see § 63.6(f)(3)) into the requirements of subpart EEE at § 63.1206(b)(3). According to these provisions, the regulatory agency has an obligation to make a finding of compliance with applicable emissions standards upon obtaining all of the compliance information, including the written reports of performance test results. Because of this obligation, air program staff currently review stack test results that are submitted in NOCs subsequent to performance testing, and routinely transmit an official letter to you indicating the acceptability of the test results. Furthermore, if you fail the comprehensive performance test, there are requirements in part 63 subpart EEE specifying what you must then do. Given this combination of regulatory obligations and current practices, we see no need to impose additional requirements governing review of performance test results. This approach is also consistent with the timing for when permit requirements are deferred to CAA (see the amended rule language for 40 CFR 270.19, 270.22, 270.62, and 270.66)).

5. How Should Sources in the Process of Obtaining RCRA Permits Be Switched Over to Title V?

In the initial NPRM and the May, 1997, NODA, we did not specifically describe, or solicit comment on, permit process issues for facilities operating under RCRA interim status, or facilities seeking to renew their RCRA permits (which can occur even after the nominal permit term has expired). In the above sections, we focused on implementing the deferral of RCRA controls by determining how and when to move conditions out of existing RCRA permits. For facilities that do not yet have RCRA permits, or that need to renew their RCRA permits, the focus of the discussion shifts to how and when to move nonrisk-based air emissions considerations out of the RCRA permitting process. As indicated earlier, RCRA interim status facilities will continue to be subject to RCRA permitting requirements for air emissions standards and related operating parameters, including trial burn planning and testing, until they have demonstrated compliance with the new standards by conducting a comprehensive performance test and submitting an NOC to the agency. Facilities in the process of renewing their RCRA permits will also continue to be subject to RCRA permitting requirements until the same point.

Again, there is no single approach for moving these two categories of facilities out of the RCRA permitting process (*i.e.*, for stack air emissions requirements). The most appropriate route to follow in each case depends on a host of factors, including, for example: (1) The status of the facility in the RCRA permitting process at the time this rule is published; (2) the priorities and schedule of the regulatory agency; (3) the level of environmental concern at a given site; and (4) the number of similar facilities in the permitting queue. The regulatory agency (presumably in coordination with the facility) will balance all of these factors. In mapping out a site-specific approach, we are encouraging permitting agencies to give weight to two key factors. First, we should minimize to the extent practicable the amount of time a facility would be subject to duplicative requirements between RCRA and CAA programs. Second, as indicated in Part Five, Section V.B (Risk Burn/ Comprehensive Performance Testing), testing under one program should not be unnecessarily delayed in order to coordinate with testing under the other. For example, if a facility is planning to conduct a RCRA trial burn within a fairly short amount of time after the rule is promulgated, they generally should not be allowed to delay the trial burn to coordinate with comprehensive performance testing under MACT that may not occur for three more years.[304]

Even though we cannot prescribe a single national approach for the transition from RCRA permitting for air emissions, we can provide some other recommendations to help permitting authorities and facility owners or operators determine a sound approach. In this section, we walk through some examples, intended as guidance, for transitioning facilities that are in the process of obtaining or renewing a RCRA permit. We hope that these examples will also enhance consistency among the various regulatory agencies.

a. Example 1. Facility has submitted a RCRA permit renewal application. Some sources, particularly hazardous waste incinerators, have RCRA permits that are close to expiring. These sources may already have initiated the renewal process by the time this rule is promulgated. In these situations, we anticipate the source might need to modify its current permit to accommodate any upgrades necessary to comply with the new standards. Facilities may modify RCRA permits that have been continued under § 270.51 pending final disposition of the renewal application. Thus, facilities will be able to use the streamlined permit modification procedures that were promulgated in § 270.42(j) to effect the necessary changes pending resolution of their renewal application. Depending on where they are in the renewal process, the permitting authority may, alternatively, elect to fold the modifications into the actual renewal process, thereby streamlining some of the administrative requirements.

Issuance of RCRA hazardous waste combustor permits often takes several years. If the source and the permitting authority are in the early stages of renewal, the schedule of permitting activities may not call for a trial burn to be conducted until sometime close to when the source would be required to conduct comprehensive performance testing under MACT. If so, the source may be able to either coordinate the testing requirements of the two programs, *e.g.*, if a RCRA risk burn is necessary, or to perform just the comprehensive performance test under MACT. If, on the other hand, they are further along in the renewal process, the trial burn might be scheduled for the near future. In this case, the approach outlined in Example 2 below might be more appropriate to follow.

Regardless of the approach followed to transition the air emissions and related operating parameters for the combustion unit to the Air program, the

[304] There may be a short delay allowed for the purpose of combining RCRA trial burn and MACT performance test plans. Of course, even if the timing for the two tests is such that they may be coordinated, that does not mean that one can simply replace the other, particularly because test conditions for one may not be applicable to the other (refer to Section V.B for additional discussion on this topic).

RCRA permit must still be renewed for all other aspects of hazardous waste management at the facility.

b. Example 2. Permitting authority has approved, or is close to approving, the RCRA trial burn plan at the time the final MACT standards are promulgated. Both interim status facilities and those seeking permit renewal are subject to requirements in §§ 270.62 and 270.66 to develop and obtain approval for trial burn plans. Requirements in these sections also call for permitting authorities to provide public notice of approved (or tentatively approved) trial burn plans and projected schedules for conducting the burns. We anticipate that many of the hazardous waste combustors seeking permits who are subject to this rulemaking will have already had their trial burn plans approved, or close to being approved, by the time this rule is promulgated. In such situations, we expect the facility to continue with the trial burn as planned.

If the burn is successful, we anticipate the permitting authority will issue a final RCRA permit that covers both the operations of the hazardous waste combustor unit as well as all other hazardous waste management activities at the site. We recommend that the permit be worded flexibly to facilitate transition to title V once the source subsequently demonstrates compliance with the MACT standards. For example, conditions in the RCRA permit that would ultimately be covered under title V might have associated sunset provisions indicating that the conditions will cease to apply once the combustor unit demonstrates compliance with the MACT standards. This would ensure that the amount of time the source might be subject to emissions limits and operating parameters under both RCRA and the CAA would be minimized. It would also eliminate the need to engage in a separate permit modification action to remove the conditions after the MACT compliance demonstration.

Facilities in this scenario may determine they need to make some changes to their equipment or operations to meet the new emissions limits. These facilities will be able to use the streamlined permit modification procedures that were promulgated in § 270.42(i).

If the trial burn is not successful, we expect permitting authorities to refer to the RCRA trial burn failure policy (see Memorandum on Trial Burns, EPA530-F-94-023, July 1994). This policy includes discussion in the following areas: (1) Taking immediate steps to restrict operations; (2) initiating procedures for permit denial (which would be appropriate for interim status or renewal candidates); (3) initiating proceedings to terminate the permit (which would be appropriate for proposed new facilities); and (4) authorizing trial burn retesting after the facility investigates reasons for the failure and makes changes to address them.

c. Example 3. The permitting authority does not anticipate approving the trial burn plan, or the trial burn is not scheduled to occur until after the Notice of Intent to Comply is submitted. As suggested in the previous example, if a facility is ready to proceed with a trial burn at the time the final hazardous waste combustor MACT rule is promulgated, we expect that activities will proceed as planned. Once the Notice of Intent to Comply is submitted, however, the regulatory authority will have a better understanding of how and when the facility intends to comply with the emissions standards, and how the trial burn would fit in with the MACT compliance demonstration. Thus, we expect the regulatory authority may wish to decide whether to separately continue with the trial burn schedule laid out in the RCRA permitting process or, conversely, coordinate with MACT comprehensive performance testing, based on a number of considerations, including, for example: (1) The facility's schedule and planned modifications for MACT compliance; (2) progress on completing and approving the RCRA trial burn plan; (3) whether the risk testing that may be necessary under RCRA is likely to fit in with the MACT performance test schedule; and (4) whether the facility wants to combine risk testing under RCRA with the MACT performance test.

Even after a source conducts its comprehensive performance test and subsequently submits the NOC to the regulatory agency, separate risk testing might be necessary. For example, if the comprehensive performance test did not generate sufficient data for a site-specific risk assessment, a RCRA "risk burn" might be required (see discussion in Part Five, Section V.B.).

E. What Is Meant by Certain Definitions?

When we considered incorporating MACT standards into both RCRA and CAA regulations, we anticipated some confusion about definitions that differ between the two programs. In the NPRM, we solicited comments on our expressed preference not to reconcile these issues on a national basis. (See 61 FR 17452). Several commenters suggest that EPA reconcile the issues and clarify definitions. In the final rule, we have made some changes, as discussed below, to ensure consistency of interpretation and to minimize uncertainty for facilities seeking to comply with today's rule. With these changes, we believe that revisions to the definitions themselves are not necessary.

1. Prior Approval

In the proposed rule, we stated that RCRA and CAA are similar in that they both require EPA prior approval before construction or reconstruction of a facility. There were no adverse comments received regarding this statement. The requirements for obtaining prior approval are apparently clear under both programs.

We suggested in the proposed rule that readers of part 63 might be unaware of their obligations under RCRA. Therefore, as proposed, we are inserting the following note into § 63.1206 Compliance Dates, "An owner or operator wishing to commence construction of a hazardous waste incinerator or hazardous waste-burning equipment for a cement kiln or lightweight aggregate kiln must first obtain some type of RCRA authorization, whether it be a RCRA permit, a modification to an existing RCRA permit, or a change under already existing interim status. See 40 CFR part 270". No adverse comments were submitted.

2. 50 Percent Benchmark

As stated in the proposed rule, RCRA and CAA both classify "reconstruction" as any modifications of a facility that cost more than 50 percent of the replacement cost of the facility. However, the significance of this term is different depending on which statute is being applied. Two commenters confirmed that the distinction is critical. Therefore, they concluded that, to avoid confusion, EPA should defer to the CAA definition of "reconstruction" under RCRA Section 1006(b) because it is the more flexible and appropriate definition.

The primary concern about the 50 percent benchmark is in relation to the limit imposed on RCRA interim status facilities for making modifications. To ensure that this limit would not present a barrier to making upgrades necessary to comply with MACT, we finalized a revision to § 270.72(b) to specify that interim status facilities can exceed the 50 percent limit if necessary to comply with MACT. (See 63 FR 33829, June 19, 1998). Therefore, there is no potential for practical conflict among the CAA and RCRA regulatory regimes, and no further amendment or clarification is needed.

3. Facility Definition

As stated in the NPRM, the definition of "facility" differs between CAA and RCRA. The definition has bearing in determining the value of the facility with respect to the 50 percent rule on modifications as discussed above. We proposed that the RCRA definition should be used for the RCRA application to changes during interim status, and the CAA definition should be used when determining applicability of MACT standards to new versus existing sources. Commenters disagreed with this approach and concluded that EPA should defer to the CAA definition of facility because it encompasses the entire operations at a site. We continue to believe that the CAA definition should apply to CAA requirements and that the RCRA definition should apply to RCRA requirements, since the definitions are used for a different purpose under each statute. By clarifying the 50 percent benchmark issue for RCRA interim status facilities as discussed above, we believe this satisfies commenters' concerns and, thus, it is not necessary to reconcile the facility definition.

4. No New Eligibility for Interim Status

RCRA bestows interim status on facilities that were in existence on November 19, 1980, or are in existence on the effective date of statutory or regulatory changes that render the facility subject to RCRA permitting requirements. The original RCRA rules for hazardous waste incinerators and BIFs were finalized in 1980 and 1991, respectively. Because these rules established the dates on which incinerators and BIFs were first subject to RCRA permitting requirements, the effective dates of those rules created the *only* opportunity for interim status eligibility. The interim status windows that occurred in 1980 and 1991 thus are not modified by this rule. The lone exception is that facilities currently burning only nonhazardous wastes that become newly listed or identified hazardous waste under other future rules would still be able, under existing law, to qualify for interim status (§ 270.42(g)).

5. What Constitutes Construction Requiring Approval?

The proposed rule noted that RCRA and CAA both have restrictions requiring approval prior to construction, but that each statute defines construction differently. We expressed our intent in the NPRM to retain the two definitions. In the final rule, we continue to support retaining the two definitions. Since most facilities currently possess RCRA and CAA permits, these definitions are already being applied concurrently with no apparent problems. Consequently, this is the most practical and least confusing approach for permittees and regulators.

XII. State Authorization

A. What Is the Authority for Today's Rule?

Today's rule is being issued under the joint authority of the Clean Air Act (CAA), 42 U.S.C. 7401 *et seq.*, and the Resource Conservation Recovery Act (RCRA), 42 U.S.C. 6924(o), 6924(q) and 6925. The new MACT air emissions standards are located in 40 CFR part 63. Pursuant to sections 1006(b) and 3004(a) of RCRA, 42 U.S.C. 6905(b) and 6924(a), the MACT program will only be carried out under the CAA delegated program. We strongly encourage States to adopt today's MACT standards under their CAA statute and to apply for delegation under the CAA if they do not have section 112 delegation. State implementation of the MACT portions of this rule through its delegated CAA program will facilitate coordination between the regulated entity and its State and reduce duplicative permitting requirements under the CAA and RCRA.

In addition to promulgating the MACT standards, today's rule modifies the RCRA program in other various respects and States authorized for the RCRA base program must revise their programs accordingly. For example, this rule revises the test for determining whether a facility's waste retains the Bevill exclusion by adding dioxins/furans to the list of constituents to be analyzed.

B. How Is the Program Delegated Under the Clean Air Act?

States can implement and enforce the new MACT standards through their delegated 112(l) CAA program and/or by having title V authority. A State's title V authority is independent of whether it has been delegated section 112(l) of the CAA.

Section 112(l) of the CAA allows us to approve State rules or programs to implement and enforce emission standards and other requirements for air pollutants subject to section 112. Under this authority, we developed delegation procedures and requirements located at 40 CFR part 63, subpart EEE, for National Emission Standards for Hazardous Air Pollutants (NESHAPS) under section 112 of the CAA (see 58 FR 62262, November 26, 1993, as amended, 61 FR 36295, July 10, 1996). Similar authority for our approval of state operating permit programs under title V of the CAA is located at 40 CFR part 70 (see 57 FR 32250, July 21, 1992).

Submission of rules or programs by States under 40 CFR part 63 (section 112) is voluntary. Once a State receives approval from us for a standard under section 112(l) of the CAA, the State is delegated the authority to implement and enforce the part 63 standards under the State's rules and regulations (the approved State standard would be federally enforceable). States also may apply for a partial 112 program, such that the State is not required to adopt all rules promulgated in 40 CFR part 63. We will implement the portions of the 112 program not delegated to the State. For example, documents such as the NOC will be submitted to the Administrator when due, if the State is not approved for the standards in today's rule.

Under 40 CFR 70.4(a) and section 502(d) of the CAA, States were required to submit to the Administrator a proposed part 70 (title V) permitting program by November 15, 1993. If a State did not receive our approval by November 15, 1995 for its title V program, the title V program had to be implemented by us in that State. As of today's rule, all States have approved title V programs.[305] This means that all States have the authority to incorporate all MACT standards (changes to section 112 of the CAA) into the title V permits as permit conditions, and have the authority to enforce all the terms and conditions of the title V permits. *See* 40 CFR 70.4(3)(vii).

The MACT standards are effective upon promulgation of this rule. Facilities with a remaining permit term of three or more years will be required to submit title V applications to their permitting authorities to revise their permits.[306] States will write the new

[305] Under the CAA, Indian tribes may apply to EPA to be treated as States and obtain approval of their own Clean Air Act programs. Section 301(d) of the Clean Air Act, 42 U.S.C. 7601(d); see also 40 CFR part 49. Tribes may thus become empowered to implement the section 112 and title V portions of today's rule is areas where they demonstrate jurisdiction and the capacity to do so. Currently under RCRA, there is no Tribal authorization for the RCRA Subtitle C hazardous waste program and thus EPA generally implements the RCRA portions of today's rule in Indian Country.

EPA has authority to implement the federal operating permits program 940 CFR part 71) where a State fails to adequately administer and enforce an approved part 70 program, or where a State fails to appropriately respond to an EPA objection to a part 70 permit. Additionally, some sources in U.S. Territories, the Outer Continental Shelf, and Indian Country, are subject, or will soon be subject, to part 71.

[306] Title V permits are issued for a period not to exceed five years. *See* 40 CFR 70.4(b)(3)(iii). You

Continued

MACT standards into any new, renewed, or revised title V permit and enforce all terms and conditions in the title V permit. A State's authority to write and enforce title V permits is independent of its authority to implement the changes to the MACT standards (changes to section 112 of the CAA). Therefore, while both we and the State can enforce the federal MACT standards within a title V permit, until the State receives approval from us for required changes to section 112 of the CAA, we will implement the 112 program.

C. How Are States Authorized Under RCRA?

Under section 3006(g) of RCRA, enacted as part of the Hazardous and Solid Waste Amendments (HSWA) of 1984, new requirements imposed by us as a result of authorities provided by HSWA take effect in authorized States at the same time as they do in unauthorized States—as long as the new requirements are more stringent than the requirements a State is authorized to implement. We implement these new requirements until the State is authorized for them. After receiving authorization, the State administers the program in lieu of the Federal government, although we retain enforcement authority under sections 3008, 3013, and 7003 of RCRA.

Most of the new Federal RCRA requirements in today's final rule are being promulgated through the HSWA amendments to RCRA. Regulatory changes based on HSWA authorities are considered promulgated through HSWA. The following RCRA sections, enacted as part of HSWA, apply to today's rule: 3004(o) (changes to the MACT standards), 3004(q) (fuel blending), and 3005 (omnibus). As a part of HSWA, these RCRA provisions are federally enforceable in an authorized State until the necessary changes to a State's authorization are approved by us. See RCRA section 3006, 42 U.S.C. 6926. The Agency is adding these requirements to Table 1 in § 271.1(j), which identifies rulemakings that are promulgated pursuant to HSWA.

In contrast, the change to the permit modification table (Appendix I to § 270.42) is promulgated through authorities provided to us prior to HSWA. Therefore, this change does not become effective until States adopt the revision and become authorized for that revision.

Under RCRA, States that have received authorization to implement and enforce RCRA regulatory programs are required to review and, if necessary, to modify their programs when we promulgate changes to the federal standards that result in the new federal program being more stringent or broader in scope than the existing federal standards. This is because under section 3009 of RCRA, States are barred from implementing requirements that are less stringent than the federal program. See also 40 CFR 271.21.

In four respects, we consider today's final rule to be more stringent than current federal RCRA requirements: (1) The added definitions for dioxins/furans and TEQ (40 CFR 260.10); (2) the requirement that permits for miscellaneous units must include appropriate terms and conditions from part 63, subpart EEE standards (40 CFR 264.601); (3) the establishment of new standards to control particulate matter (40 CFR 266.105(c)); and (4) the addition of dioxin/furans as listed potential Products of Incomplete Combustion (PIC) (40 CFR 266.112; Appendix VIII to 40 CFR part 266). Authorized States must adopt these requirements as part of their State programs and apply to us for approval of their program revisions. The procedures and deadlines for State program revisions are set forth in 40 CFR 271.21.

Section 3009 of RCRA allows States to impose standards that are more stringent or more extensive (*i.e.*, broader) in scope than those in the Federal program (see also 40 CFR 271.1(i)(1)). Thus, for those Federal changes that are less stringent, or reduce the scope of the Federal program, States are not required to modify their programs. Further, EPA will not implement those provisions promulgated under HSWA authority that are not more stringent than the previous federal regulations in States that have been authorized for those previous federal provisions. EPA will implement these new provisions in States that are not authorized to implement the previous federal regulations.

In two respects, we consider today's rule to be less stringent than current federal requirements: (1) The inapplicability of certain provisions of RCRA once specified part 63, subpart EEE and other requirements have been met (40 CFR 264.340(b)(1); 265.340(b)(1); 266.100(b)(1), 266.100(d)(1) and (d)(3); 266.100(h); 270.19; 270.22; 270.62; and 270.66); and (2) the provision for RCRA permit modifications to remove inapplicable RCRA conditions (Appendix I to 40 CFR part 270.42).[307]

The rest of the requirements in today's rule, in our view, are neither more nor less stringent than current regulatory requirements. They are either reiterations or clarifications of our existing regulations or policies (40 CFR 264.340(b)(2), 265.340(b)(2), 266.100(b)(2), and 266.101).

Although States must adopt only those requirements that are more stringent, in the spirit of RCRA section 1006(b), which directs us to avoid duplicative RCRA and CAA requirements, we strongly urge States to adopt all aspects of today's final rule (including the clarifying as well as less stringent sections). The adoption of all portions of today's final rule by state agencies will ensure clear, consistent requirements for owners, operators, affected sources, State regulators, and the public. Pursuant to today's rule, the permitting requirements will be implemented solely through the CAA title V program. If a RCRA permitted facility is required to use RCRA risk-based air emissions standards in addition to the CAA designated technology based standards, we will exercise our omnibus authority in section 3005 of RCRA to modify the facility's RCRA permit.[308] Therefore, we believe that the standards promulgated today properly implement the goals of sections 3004(o) and (q) of RCRA to ensure the safe and proper management of the affected combustion units and the goal of section 1006(b) of RCRA to avoid duplicative and potentially confusing permitting requirements under two different environmental statutes (RCRA and CAA). For these reasons, we encourage States to adopt these

will have three years to come into compliance with the new MACT standards. If you have fewer than three years remaining on your title V permit term, our part 70 regulations do not require you to reopen and revise your permit to incorporate the new MACT standard into the title V permit. See 40 CFR 70.7(f)(1)(i). However, the CAA does allow State programs to require revisions to your permit to incorporate the new MACT standard. Therefore, if you have fewer than three years remaining on your title V permit, you should consult your state permitting program regulations to determine whether a revision to your permit is necessary to incorporate the new part 63 MACT standards. If your are not required to revise your permit to incorporate the new standard, you must still fully comply with today's standard.

[307] States choosing to adopt the other less stringent changes to RCRA in today's rule also should adopt the change to 40 CFR 270.42. The change to 40 CFR 270.42 provides the RCRA permit modification procedure to eliminate inapplicable RCRA requirements once specified part 63, subpart EEE and other requirements have been met.

[308] If a State has a provision in its State air statute or regulation that is equivalent to the RCRA omnibus authority (RCRA section 3005(c)), we expect that the State will be able to use its air authority in pace of its RCRA omnibus authority.

regulations as quickly as their legislative and regulatory processes will allow.

Part Six: Miscellaneous Provisions and Issues

I. Does the Waiver of the Particulate Matter Standard or the Destruction and Removal Efficiency Standard Under the Low Risk Waste Exemption of the BIF Rule Apply?

Section 266.109 of the current BIF regulation provides a conditional exemption from the destruction and removal efficiency standard and the particulate matter standard for low risk wastes. We proposed to restrict eligibility for the waiver of the particulate matter standard to BIFs other than cement and lightweight aggregate kilns because the waiver could supersede the MACT requirements for the particulate matter standards. We had the same concern for the destruction and removal efficiency requirements. See 61 FR at 17470. After reconsidering the issue, we are clarifying that today's MACT requirements are separately applicable and enforceable and that no action is needed to ensure that a BIF waiver does not supersede the MACT requirements. See the discussions in Part Five of today's preamble regarding integration of the MACT and RCRA standards.

II. What Is the Status of the "Low Risk Waste" Exemption?

Section 264.340(b) and (c) exempts certain incinerators from the RCRA emission standards if the hazardous waste burned contains (or could reasonably be expected to contain) insignificant concentrations of Appendix VIII, part 261, hazardous constituents. We proposed that this "low risk waste" provision no longer be applicable incinerators on the MACT compliance date because a risk-based exemption from technology-based MACT standards seemed inappropriate. See 61 FR at 17470. After reconsidering the issue, we have determined that no specific action is necessary because the MACT standards are separately applicable and enforceable standards. See the discussion in Part Five of today's preamble regarding integration of the MACT and RCRA standards.

III. What Concerns Have Been Considered for Shakedown?

In the proposal, we expressed concern that some new units do not effectively use their allotted 720-hour pre-trial burn shakedown period or appropriate extensions to correct operational problems. This can potentially lead to trial burn failures and emission exceedances, which pose unnecessary risks to human health and the environment. Therefore, we proposed three shakedown options to enhance regulatory control over trial burn testing:

(1) Prior to scheduling trial burns, we would require facilities to provide the Director a minimum showing of operational readiness.

(2) We would require notification of operational readiness prior to, and following, the shakedown period.

(3) We would provide guidance on how to effectively prepare for a trial burn. These options were proposed for inclusion under both the CAA and RCRA regulations, and comments were requested regarding their usefulness.

A few commenters preferred Option 3 because it would be useful in determining how to effectively prepare for a trial burn. Regarding Options 1 and 2, two commenters felt the cost, time, and resources required for a trial burn already provide adequate financial incentive to prepare, plan, and conduct trial burns efficiently. Two commenters felt that Option 3 provided the potential for inequities in implementation of the guidance by the permit writer. In general, most commenters agreed that additional regulatory requirements are not necessary.

In light of the comments, we decided not to adopt any of the proposed options. We acknowledge that it is in the facility's best interest to conduct a successful trial burn that most facilities will properly utilize their shakedown period. However, during the transition period from RCRA to MACT compliance, we strongly encourage facilities to properly use their shakedown period to correct operational problems that pose unnecessary risks to human health and the environment.

Therefore, with the exception of risk burns, we are pursuing the deferral of RCRA trial burns to the MACT performance test requirements. A source remains subject to RCRA trial burns during the transition period to MACT compliance. For facilities where unique considerations make a SSRA necessary, risk-based permit conditions may result. In such cases, there likely would need to be conditions for all phases of operation in the RCRA permit. Thus, start-up and shakedown would still be an issue for some RCRA combustor facilities given that they would have to be in compliance with the unique RCRA emission standards even during startup and shakedown (unless the permit conditions specify otherwise).

IV. What Are the Management Requirements Prior to Burning?

Today, we are finalizing the proposal to revise 40 CFR 266.101 ("Management prior to burning") to clarify that fuel blending activities are regulated under RCRA. See 61 FR at 17474 (April 19, 1996). As described in detail in the proposal, this is already implicit (and for some units, explicit) in existing rules. Therefore, today's rule is more an interpretive clarification. See 52 FR 11820 (April 13, 1987). By incorporating the term "treatment" into the regulation, we are clarifying that fuel blending activities that are conducted in units other than 90-day tanks or containers also are subject to regulation.

We received two comments expressing concern that this would subject all fuel blending-related equipment permitting, without allowing for case-by-case determinations. For example, these commenters believe that some pre-processing activities conducted by blenders (shredding, drum crushing, and other physical handling) do not meet the definition of treatment and should not be subject to permitting standards. However, we feel that these activities meet the existing definition of treatment. They are "processe(s) . . . designed to change the physical . . . composition of . . . hazardous waste so as to . . . render such waste amenable for recovery" via combustion. See 40 CFR 260.10 (definition of "treatment").

Moreover, these pre-processing activities should be subject to permitting requirements. Controls on these activities are necessary to protect against releases of hazardous constituents to the environment due to the nature of those operations (*e.g.*, crushing or shredding of drums containing hazardous wastes, grinding of waste materials, etc.). *See Shell Oil* v. *EPA*, 950 F. 2d 741, 753–56 (D.C. Cir. 1991), which broadly construes the definition of treatment to assure that the RCRA goal of cradle-to-grave management of hazardous wastes is satisfied and that specific types of units remain subject to subtitle C regulation. For units that do not already meet the definition of a specific unit, subpart X is available to provide the appropriate standards.

V. Are There Any Conforming Changes to Subpart X?

In today's rule, we are making a *conforming change* to part 264 subpart X (§ 264.601) to make reference to part 63 subpart EEE.

Hazardous waste treatment, storage, and disposal facilities that are not

classified under other categories (*e.g.*, tank systems, surface impoundments, waste piles, incinerators, *etc.*) are classified as miscellaneous units and regulated under part 264 subpart X. However, due to the varying types and designs of miscellaneous units, subpart X does not include specific performance standards. Instead, subpart X makes reference to requirements in other sections of the regulations. Section 264.601 of subpart X states that "Permit terms and provisions shall include those requirements of subparts I through O and subparts AA through CC of this part, part 270, and part 146 that are appropriate for the miscellaneous unit being permitted ." This statement directs the permitting agency to look at the requirements (*e.g.*, performance standards, operating parameters, monitoring requirements, *etc.*) from other sections in the regulations when developing appropriate permit conditions for miscellaneous units.

In the past, permitting authorities have often looked to the part 264 subpart O regulations for incinerators to develop the appropriate permit conditions for units such as thermal desorbers and carbon regeneration units. Since today's rule upgrades the air emission standards for certain source categories, these new standards also should be considered when determining the appropriate requirements for miscellaneous units, most notably those engaged in any type of thermal operation. Therefore, the language in § 264.601 of subpart X is being modified to incorporate a reference to part 63 subpart EEE.

VI. What Are the Requirements for Bevill Residues?

A. Dioxin Testing of Bevill Residues

In the proposal, we proposed to add polychlorinated dibenzo-p-dioxin and polychlorinated dibenzo-furan compounds to appendix VIII of part 266. Appendix VIII lists those compounds that may be generated as products of incomplete combustion and that must be included in testing of Bevill residues conducted pursuant to 40 CFR 266.112. Products of incomplete combustion can be unburned organic compounds that were originally present in the waste, thermal decomposition products resulting from organic constituents in the waste, or compounds synthesized during or immediately after combustion. We noted in the proposal that there is a considerable body of evidence to show that dioxin and furan compounds can be formed in the post-combustion regions of hazardous waste burning boilers, industrial furnaces, and incinerators, especially at temperatures between 250–450°C.[309 310] Collected particulate matter in the post-combustion regions of furnaces can provide sites for adsorption of precursors, formation of dioxins and furans by surface chlorination of precursors, catalytic production of chlorine for subsequent chlorination of dioxin and furan precursors, and *de novo* synthesis of dioxins and furans. This same particulate matter may be subsequently managed as excluded Bevill residue.

No evidence was provided by commenters to show that dioxins and furans cannot be formed in cooler, post-combustion regions of furnaces (*e.g.*, ductwork, boiler tubes, heat exchange surfaces, and air pollution control devices). A few commenters referenced the total number of nondetects for all of the compounds in the cement kiln dust database. However, the relevance of this information specifically to dioxins and furans was unclear. Dioxins and furans have repeatedly been detected in cement kiln dust, as well as other Bevill residues.[311 312]

The majority of commenters were concerned about implementation issues. Many felt that the addition of dioxins and furans to part 266 appendix VIII, in conjunction with the proposed requirement for daily sampling and analysis of Bevill residues, would make Bevill demonstrations prohibitively expensive. They also noted that the turnaround time for daily dioxin and furan analyses would delay compliance demonstrations and result in shortages in storage capacity. One commenter felt that daily sampling for dioxins and furans is not warranted because cement kiln dust at their site has already been shown to meet the proposed Bevill exclusion criteria for dioxins and furans. None of these arguments directly address our basic premise that dioxin and furan compounds can be generated in combustion systems, are of concern to the protection of human health and the environment, and, as such, should be included in part 266 appendix VIII. Rather, these comments pertain to issues that are more readily and appropriately resolved within the context of site-specific Bevill testing plans.

The proposed daily residue test frequency, which was cited most often as an impediment in conjunction with dioxin and furan analysis, is not being promulgated as part of today's rule. The rule will leave maximum flexibility for development of appropriate dioxin and furan analysis frequencies considering site-specific factors. Most facilities should be able to substantially limit the number of dioxin and furan analyses after an initial sampling effort. Most residue test plans rely on the concentration-based comparisons to F039 nonwastewater levels (40 CFR 266.112(b)(2)) in combination with a phased testing approach. Under the phased approach, test frequency can be substantially reduced for those constituents where initial sampling efforts reveal that concentrations are well below the F039 levels. Of the facilities where residue testing for dioxins and furans has been performed, we are aware of only two facilities where dioxins and furans have exceeded the F039 levels. Thus, the burden of higher analytical costs is expected to be appropriately limited to those few sites with significant dioxin and furan residue concentrations.

Several commenters pointed out that some Bevill residues (*e.g.*, slag from primary smelters) are generated prior to the post-combustion regions typically associated with dioxin and furan formation. Indeed, the preamble discussion in the proposal focused exclusively on post-combustion residues and did not address Bevill-exempt primary smelter slags. We currently do not have analytical data on dioxins and furans in smelter slag. However, our current information on dioxin and furan formation mechanisms suggests that it would be highly unlikely to expect significant dioxins and furans in smelter slag. Therefore, we agree that dioxin and furan analyses should be limited to those residues where there is a reasonable expectation that dioxins and furans could be present (*e.g.*, post-combustion residues).

Finally, two commenters disagreed with our assertion that dioxins and furans have been shown, in a national comparison, to be higher in residues from hazardous waste burning cement kilns than from other cement kilns. Although this information was included in the proposal as background, it is not necessary to reconcile various interpretations regarding national trends for today's rule. The 40 CFR 266.112 provisions are site-specific, and 40 CFR 266.112(b)(1) provides ample opportunity for you to demonstrate, on a site-specific basis as necessary, that waste-derived residues are not

[309] USEPA, "Estimating Exposure to Dioxin-Like Compounds", EPA/600/6-88/005Ca, June 1994.

[310] USEPA, "Combustion Emissions Technical Resource Document (CETRED)", EPA/530/R-94/014, May 1994.

[311] USEPA, "Report to Congress on Cement Kiln Dust", EPA/530/R-94/001, December 1993.

[312] USEPA, "Dioxins/Furans, Metals, Chlorine, Hydrochloric acid, and Related Testing at a Hazardous Waste-Burning Light-Weight Aggregate Kiln", June 1997 Draft Report.

significantly different from normal residues.

After considering all of the comments on the proposal, we are adding dioxins and furans to part 266 appendix VIII in today's rule. A notation has been included to clarify that dioxin and furan analyses are required only for post-combustion residues. Commenters provided no compelling information to challenge the classification of dioxins and furans as products of incomplete combustion which can be formed in post-combustion regions of combustion systems, and the presence of dioxin and furan compounds in several post-combustion Bevill residues is clearly documented. Also, the increased use of carbon injection technology to achieve dioxin and furan stack emissions reductions could increase dioxin and furan contamination of Bevill residues in the future. The addition of dioxins and furans to part 266 appendix VIII is not expected to unduly burden the regulated community because facilities with dioxins and furans well below exclusion levels should be able to justify a minimum test frequency.

Dioxins and furans will be listed in part 266 appendix VIII simply as "Polychlorinated dibenzo-p-dioxins" and "Polychlorinated dibenzo-furans". However, the specific form of dioxins and furans that must be determined analytically will depend on the portion of the two-part test that is being implemented. If you are performing a comparison with normal residues pursuant to 40 CFR 266.112(b)(1), specific congeners and homologues must be measured and converted to TEQ values using the procedure provided in part 266, appendix IX, section 4.0. We received no comments regarding this portion of the proposal. If you are utilizing the concentration-based comparison to the F039 nonwastewater levels in 40 CFR 268.43 as outlined in 40 CFR 266.112(b)(2), then only the tetra-, penta-, and hexa-homologues need to be measured (these are the only homologues with established F039 concentration limits). One commenter seemed uncertain as to whether the tetra-, penta-, and hexa-homologue concentrations should be converted to TEQ values. We have revised the regulatory language to clarify that total concentrations for each homologue, not TEQs, should be used for the F039 comparisons. Another commenter objected to the use of F039 levels for the health-based comparison, noting that the F039 concentrations are technology-based levels. Our rationale for relying on the F039 concentrations has been explained previously (see 58 FR at 59598, November 9, 1993) and is not being revisited in today's rule.

B. Applicability of Part 266 Appendix VIII Products of Incomplete Combustion List

In the proposal, we noted the confusion regarding whether every constituent listed on the part 266 appendix VIII list must be included in residue testing at every facility. We proposed to clarify that the part 266 appendix VIII list is applicable in its entirety to every facility.

The only comments received on this issue were objections to our characterization of this change as a clarification. The commenters felt this was a substantive change that should not be enforced prior to the effective date of any final rule establishing the revision as law. The Agency is proceeding in today's rule to make the part 266 appendix VIII list applicable in its entirety to every facility by changing the title of the appendix from "Potential PICs for Determination of Exclusion of Waste-Derived Residues" to "Organic Compounds for Which Residues Must Be Analyzed." This change is considered a revision to the part 266 regulations effective 30 days after the date of publication of today's rule. We will not seek to retroactively enforce this provision.

VII. Have There Been Any Changes in Reporting Requirements for Secondary Lead Smelters?

We proposed that secondary lead smelters subject to MACT standards for the secondary lead source category not be subject to RCRA air emission standards. 61 FR at 17474 (April 19, 1996). This exemption would apply only if a secondary lead smelter processed the type of feed material we evaluated in promulgating the secondary lead MACT standards, namely, lead-bearing hazardous wastes containing less than 500 ppm toxic nonmetals and/or hazardous wastes listed in appendix XI to 40 CFR part 266. *Id.* at 14475. Secondary lead smelters are presently not subject to RCRA air emission standards under these circumstances. See existing § 266.100 (c)(1) and (c)(3). However, they are subject to certain notification and recordkeeping requirements found in § 266.100 (c)(1)(I) and (c) (3) and on-going sampling and analysis requirements in § 266.100 (c)(1)(ii) and § 266.100 (c)(3)(i)(D). The practical effect of the proposal was to continue to relieve secondary lead smelters of these administrative requirements.

The proposal was supported by the public commenters. The reason for the proposal remains. That is, now that secondary lead smelters are complying with MACT standards for their source category, it is not necessary for them to be regulated under RCRA also for their air emissions. 60 FR 29750 (June 23, 1995). For the same reason, it is unnecessary to have the same level of recordkeeping and other administrative oversight as when these units were exempt from RCRA air emission requirements but not yet complying with CAA standards for hazardous air pollutants. 61 FR at 14474. Consequently, we are finalizing this portion of the proposal.

Today's rule takes the form of an amendment to the RCRA BIF rule (new § 266.100 (h)) and indicates that secondary lead smelters are exempt from all provisions of the BIF rule except for § 266.101, which contains the restrictions on types of hazardous waste which may be burned, as described in the first paragraph above. As proposed, a secondary lead smelter must provide a one-time notice to the Regional Administrator or State Director identifying each hazardous waste burned and stating that the facility claims an exemption from other requirements in the BIF rules. Those secondary lead smelters which have already notified pursuant to existing regulatory provisions (namely § 266.100 (c) (1) (i) or § 266.100 (c) (3) (i) (D)) would not have to renotify.

VIII. What Are the Operator Training and Certification Requirements?

Section 129 of the CAA requires us to develop and promulgate a program for training and certification of operators of facilities that burn municipal and medical wastes. We accordingly promulgated operator training and certification requirements for the operators of municipal waste combustors (60 FR 65424 (December 19, 1995)) and medical waste incinerators (62 FR 48348 (September 15, 1997)). At proposal, we considered similar requirements for hazardous waste combustor operators also and requested comments on whether: (1) Operator certification requirements are necessary for hazardous waste combustors, and (2) the American Society of Mechanical Engineers (ASME) standards (or an equivalent state certification program) are appropriate and sufficient. We note that ASME has established a Standard for the Qualification and Certification of Hazardous Waste Incinerator Operators in collaboration with the American National Standards Institute (ASME Standard Number QHO-1-1994) and has been providing certifications since 1996.

Commenters differed widely on two key issues: (1) Whether such a training program should be voluntary, mandatory, or even necessary, considering that RCRA already requires some site-specific training program (40 CFR 264.16); and (2) whether the certifying agency should be an independent body like ASME versus an industry organization like the Cement Kiln Recycling Coalition. Most commenters favored the establishment of a mandatory operator certification program by an independent organization that develops consensus standards (*e.g.*, ASME, American Society for Testing and Materials, or American National Standards Institute) in order to preserve the integrity of certification. We agree and note that ASME has already done commendable work in developing certification programs for operators of municipal waste combustors, medical waste incinerators, high capacity fossil-fuel fired plants, and hazardous waste incinerators. Each combustor program includes defined criteria for certification, including operator qualifications, recommended training, examination content, minimum passing grades, and due process. These programs are incorporated (at least in part) into EPA's combustion regulations to satisfy the CAA section 129 mandate, and we are extending similar requirements in today's rule to all hazardous waste combustor operators also. We find that the concerns about good operator training and certification that underlie the section 129 requirement for municipal waste combustors and medical waste incinerators apply as well to those persons charged with the responsibility for safe handling and burning of hazardous waste.

Some kiln operators and the Cement Kiln Recycling Coalition have commented that cement and lightweight aggregate kilns are much larger and more diverse facilities than most hazardous waste incinerators, that these kilns operate with employee unions that object to additional outside certification when site-specific training programs are already in place, and that the ASME certification programs are not pertinent or applicable to them. We recognize that there are some differences in the operation of incinerators and cement and lightweight aggregate kilns. However, these differences do not suggest that operator training and certification should be abandoned. Rather, they serve to emphasize the importance of having a rigorous operator training and certification program in place and having it subject to regulatory agency scrutiny. In that regard, we are aware of the Cement Kiln Recycling Coalition's efforts to develop a suitable industry-wide training and certification program for the kilns. However, the Cement Kiln Recycling Coalition's efforts to date have not resulted in a final industry-wide set of standards that can be relied upon in today's rule, and we note that the current general facility training programs under § 264.16 do not fully cover the areas that would need to be addressed at facilities burning hazardous waste. For example, § 264.16 neither identifies important areas of training with respect to daily operations (such as hazardous waste and residues handling operations, air pollution control device operations, troubleshooting, normal start-up and shut-down procedures, continuous emissions monitoring system operation and maintenance *etc.*) nor discriminates among the different categories of operators. Also, § 264.16 does not specify any operator certification nor minimum standards for certification, which are needed to ensure the initial and continual competence of the hazardous waste combustor facility operators.

We expect that kiln specific programs will be developed in the near future after complete analysis for consistency, reliability and conformance with principles of good operating and operator practices (including training and certification). Today's rule therefore specifies that each hazardous waste combustor facility must develop an operator training and certification program. In the case of cement and lightweight aggregate kilns, the facility must submit its program to the Agency for approval. The submittal will be evaluated for completeness, reliability and conformance with appropriate principles of good operator and operating practices (including training and certification). If a state-approved certification program becomes available, the facility's program must conform to that state program. These are to ensure that sufficient specifics are included in each facility program. In the case of hazardous waste incinerators, the facility's program must conform to either a state-approved certification program or, if none exists, to the ASME certification program (Standard No. QHO-1-1994). Again, this is to ensure that sufficient specifics are contained in a facility program.

IX. Why Did the Agency Redesignate Existing Regulations Pertaining to the Notification of Intent To Comply and Extension of the Compliance Date?

In today's final rule, we redesignate existing regulations pertaining to the Notification of Intent to Comply with subpart EEE and extensions of the compliance date to install pollution prevention or waste minimization controls to meld them into the new provisions of the subpart. This ensures that similar topics (*e.g.*, notifications, compliance requirements) are grouped together in the rule. We also revise those existing regulations to: (1) Convert the regulatory language to plain language consistent with the new provisions; (2) include references to the new provisions; and (3) include references to the actual effective date of the rule.

We promulgated these regulations as Part 1 of revised standards for hazardous waste combustors. See 63 FR 33782 (June 19, 1998). We are promulgating part 2 today, which comprises the emission standards and compliance requirements. Today's revisions to the existing standards does not constitute a repromulgation and does not reopen the comment period for those standards.

We are redesignating the existing regulations as indicated in the following table:

Existing regulation	Topic	Predesignated regulation
§ 63.1211(a) and (b)	Notification requirements for the notification of intent to comply	§ 63.1210(b) and (c)
§ 63.1211(c)	Requirements for sources that do not intend to comply	§ 63.1206(a)(2)
§ 63.1212	Progress report requirements for the notification of intent to comply	§ 63.1211(b)
§ 63.1213	Certification that must accompany the notice of intent to comply	§ 63.1212(a)
§ 63.1214	Extension of the compliance date	§ 63.1206(a)(1)
§ 63.1215	Requirements for sources that become affected sources after the effective date of the emission standards.	§ 63.1212(b)

Existing regulation	Topic	Predesignated regulation
§ 63.1216	Extension of the compliance date to install pollution prevention or waste minimization controls.	§ 63.1213

Part Seven: National Assessment of Exposures and Risks

We received many public comments on the risk assessment for the proposed rule.[313] In addition, the risk assessment was peer reviewed in accordance with EPA guidelines. Many of the commenters commented on similar topics. These topics included the representativeness of the HWC facilities modeled, the estimation of facility emissions, the exposure scenarios evaluated, and the assessment of risks from mercury. As of result of these comments, we made significant changes in the risk assessment for the final rule. Also, new information became available after proposal on food intake rates for home-produced foods and methods for assessing exposures to mercury. In addition, EPA issued guidance for use of probabilistic techniques in risk assessments and a policy for evaluating risks to children. These were also considered in making revisions to the risk assessment. A complete discussion of the risk assessment for today's rule may be found in the background document.[314]

I. What Changes Were Made to the Risk Methodology?

A. How Were Facilities Selected for Analysis?

The representativeness of the example facilities used in the risk assessment at proposal was widely questioned by commenters. We analyzed eleven example facilities for the proposed rule: two commercial incinerators, two on-site incinerators, two lightweight aggregate kilns, and five cement kilns.[315] While these facilities represented a geographically diverse set of facilities in each source category, it was not possible to demonstrate in any formal way that the facilities were representative of the universe of facilities covered by the rule.

Because of this difficulty, we concluded that the most efficient approach for assuring the representativeness of the facilities analyzed was to select a stratified random sample. The number of strata was determined by the number of categories and subcategories of sources for which risk information was desired. The final sample of facilities chosen for analysis includes 66 randomly selected facilities and 10 of the 11 facilities selected at proposal for a total sample of 76 facilities out of a universe of 165 facilities within the contiguous United States.[316] The sample sizes are as follows:

HAZARDOUS WASTE COMBUSTION FACILITY STRATUM AND SAMPLE SIZES

Combustion facility category	Stratum size	Random sample size	NPRM sample size	Final sample size	High end sampling probability [1]
Cement Kilns	18	10	5	15	98
Lightweight Aggregate Kilns	5	3	2	5	100
Commercial Incinerators:					
Including Waste Heat Boilers	20	11	2	13	97
Excluding Waste Heat Boilers	12	7	2	9	95
Large On-Site Incinerators:					
Including Waste Heat Boilers	43	17	1	18	94
Excluding Waste Heat Boilers	36	15	0	15	90
Small On-Site Incinerators:					
Including Waste Heat Boilers	79	25	0	25	96
Excluding Waste Heat Boilers	65	16	0	16	88
Incinerators With Waste Heat Boilers	29	15	1	16	92

[1] Probability that a facility that lies in the upper 10% of the distribution of risk will be sampled.

For the randomly selected facilities, sample sizes within a given category were chosen such that the probability of sampling a facility in the upper ten percent of the distribution of risk would be 90 percent or greater. The probabilities actually achieved range from 88 to 100 percent depending on the size of the original, non-randomly chosen sample and changes in the sampling frame that occurred during the random sampling process.[317]

We did not target area sources specifically for sampling because the statutory definition of major sources versus area sources is based on facility-wide emissions of hazardous air pollutants and such information was not available at the time the sampling was performed. Therefore, it was not possible to determine the sampling frame. We expect that on-site incinerators, both large and small, at large industrial facilities are major sources rather than area sources. Because area sources are of interest, we made risk inferences based on those area source incinerators that could be identified and had otherwise been

[313] "Risk Assessment Support to the Development of Technical Standards for Emissions from Combustion Units Burning Hazardous Wastes: Background Information Document," February, 1996.

[314] See the background document, "Human Health and Ecological Risk Assessment Support to the Development of Technical Standards for Emissions from Combustion Units Burning Hazardous Wastes: Background Document—Final Report," July, 1999.

[315] See 61 FR 17370 and "Risk Assessment Support to the Development of Technical Standards for Emissions from Combustion Units Burning Hazardous Wastes: Background Information Document" (February, 1996).

[316] A large on-site incinerator analyzed at proposal that is undergoing RCRA closure was excluded from the analysis.

[317] Changes in the sampling frame occurred as a result of facilities that were missing from the original sampling frame were misclassified, or were no longer burning hazardous waste and had begun RCRA closure.

sampled.[318] For cement kilns, all area sources were sampled and used for making such inferences.

B. How Were Facility Emissions Estimated?

At proposal, we estimated baseline emissions (reflecting current conditions) for the example facilities from the distribution of stack gas concentrations for the corresponding category of sources. Both central tendency and high end emissions estimates were made based on the 50th and 90th percentiles of the stack gas concentration distributions. For the purpose of evaluating risks associated with the proposal, we assumed that facilities emitted at the design level determined to be necessary to meet the standard, even if this meant an increase in emissions over baseline. Many commenters thought that using percentiles to estimate emissions was inappropriate and that site-specific emissions should be used instead. Commenters also thought that it was incorrect to project an increase in risk with the proposed standards (which occurred as a result of allowing emissions to increase over baseline). We agree with these comments. For the final rule, we estimated emissions based on site-specific stack gas emission concentrations and flow rates. Site-specific stack gas concentration data were used where emissions measurements were available; otherwise, stack gas concentrations were imputed. For today's rule, we assumed emissions would remain unchanged from baseline in instances where a facility's emissions are already below the design level (which is taken as 70 percent of the MACT standard).[319] In instances where a facility's emissions exceed the design level, we determined the percentage reduction in emissions required to meet the design level. We then applied this reduction to each chemical constituent to which the standard applies.

The imputation approach we used in instances where measured data were not available involves the random selection of emissions concentrations from a pool of emissions concentrations for other facilities and test conditions that are believed to be reasonably representative of the facility in question. For groups of interrelated constituents (*e.g.*, different dioxin congeners or mercury species), imputation was carried out for the group of interrelated constituents taken together rather than each individual constituent separately. We used the random imputation approach to preserve the variability in emissions exhibited by the pooled data. Another commonly used approach for estimating emissions, emissions factors, generally represents average conditions and does not reflect the variability in emissions across facilities in a given source category. Because the objective of the risk assessment is to characterize the distribution of risks across a given source category, we deemed the use of average emissions to be inappropriate except where only very limited data are available (*i.e.*, for cobalt, copper, and manganese). Although the random imputation approach may significantly over or under estimate emissions for a given facility (a problem also inherent in emission factors), we expect that the distributions of risk across a given source category are better characterized using random imputation than with an emissions factor approach or any other approach that does not account for the variation in emissions from one facility to the next.

Emissions estimates were made for all chemical constituents covered by the rule for which sufficient data were available, including all 2,3,7,8-chlorine substituted dibenzo(p)dioxins and dibenzofurans, elemental mercury (Hg^0), divalent mercury (Hg^{+2}), lead, cadmium, arsenic, beryllium, trivalent chromium (Cr^{+3}), hexavalent chromium (Cr^{+6}), chlorine, and hydrogen chloride. In addition, emissions estimates were made for particulate matter (PM_{10} and $PM_{2.5}$) and nine other metals, three of which (cobalt, copper, and manganese) were not assessed at proposal but were included in the risk assessment for the final rule. Chemical-specific emissions estimates could not be made for organic constituents other than dioxins and furans (*e.g.*, various products of incomplete combustion) due to the lack of sufficient emission measurements. We assessed the risks from all constituents for which chemical-specific emissions estimates could be made, as well as from particulate matter. A complete discussion of the emissions estimates used in the risk assessment may be found in the technical support documents for today's rule.[320]

C. What Receptor Populations Were Evaluated?

The risk assessment at proposal examined risks to individuals engaged in subsistence activities such as farming and fishing. Some commenters viewed these types of activities as unlikely to occur and questioned whether these types of exposures are representative of actual exposures and risk. Other commenters thought the exposure pathways included in the analysis did not fully reflect potential exposures to individuals living a true subsistence lifestyle. We share the concerns raised by commenters and have refocused the assessment on non-subsistence receptor populations such as commercial farmers, recreational anglers, and non-farm residents whose numbers and locations can be estimated from available census data. At the same time, we retained the subsistence scenarios and revised them to be more reflective of a subsistence lifestyle. Although it is not known precisely how many individuals are engaged in subsistence activities or exactly where those activities take place, subsistence does occur in some segments of the U.S. population, and we believe it is important to evaluate the associated risks.

D. How Were Exposure Factors Determined?

Since the risk assessment at proposal, we have developed new information on factors that are used to estimate exposures. We obtained data collected from previously published studies and used the data to derive exposure factor information, including information for children.[321] In particular, we reanalyzed data collected by USDA to estimate consumption of home-produced foods, such as meat, milk, poultry, fish, and eggs. Over half of farm households report consuming home-produced meats, including nearly 40 percent that report consumption of home-produced beef. In the Northeast, nearly 40 percent of farm households report consuming home-produced dairy products, and, in the Midwest, nearly 20 percent do. The percentage is lower elsewhere, averaging about 13 percent nationally. Presumably most of these households are associated with dairy farms. Most farm households that consume home-produced foods are engaged in farming as an occupation rather than a means of subsistence.

The data indicate that individual consumption of home-produced foods is

[318] Area source incinerators that were identified included commercial incinerators and on-site incinerators at U.S. Department of Defense installations.

[319] This is also consistent with the assumption made in the cost and economic analysis that facilities that are currently emitting below the design level will not need to retrofit using new control technology.

[320] See "Final technical Support Document for HWC MACT Standards, Volume V: Emission Estimates and Engineering Costs," July, 1999.

[321] EPA published the new exposure factor information in the "Exposure Factors Handbook," EPA/600/P-95/002Fb, August, 1997.

higher than consumption of the same foods in the general populace. We have used the information on home-produced foods to estimate the exposures to farm households and to households engaged in subsistence farming. Only the primary food commodity produced on the farm was assumed to be consumed by farm households. In contrast, a wide variety of foods was assumed to be produced and consumed by households engaged in subsistence farming.

E. How Were Risks from Mercury Evaluated?

Commenters viewed the absence of a quantitative assessment of risks from mercury as a significant failing at proposal. However, a number of issues related to assessing risks from mercury had not been adequately resolved at the time of proposal that would have allowed us to proceed with a quantitative analysis. We have since issued our Mercury Study Report to Congress, a study that has been subject to extensive peer review, and the Utility Study Report to Congress.[322 323] With today's rule, we conclude that sufficient technical basis exists for conducting a quantitative assessment of mercury risks from hazardous waste combustors. We recognize, however, that significant uncertainties remain and the results of our mercury analysis should be interpreted with caution and be used only qualitatively.

Although the mercury analysis that accompanies today's rule is patterned after the analysis done for the Mercury Study, there are differences between the two studies in the methods used. The model we used for evaluating the fate and transport of mercury in lakes is the same as the IEM-2M model used in the Mercury Study Report to Congress. However, modifications were made to adapt it for use with rivers and streams.[324] Both studies used the ISC air dispersion model for modeling wet deposition of mercury. However, for the Mercury Study the ISC model was modified to include dry deposition of mercury vapor whereas, for the current analysis, we used a simplified treatment of dry vapor deposition. In the Mercury Study, air modeling was carried out to a distance of 50 kilometers whereas, for the current analysis, air modeling (and, therefore, the effective size of the modeled watersheds) was limited to a distance of 20 kilometers. Long-range transport of mercury emissions (beyond 50 kilometers) was considered in the Mercury Study but was not included in the current analysis. In the Mercury Study, a large number of different sources were investigated to identify whether reductions in anthropogenic or environmental sources of mercury would reduce the total exposures of mercury to the general population. The current analysis was designed to assess what reductions may occur in incremental exposures from specific industrial sources of mercury to specific individuals rather than what reductions would occur in total exposures of mercury. Also, the Mercury Study modeled exposures under varying background assumptions, but the current analysis did not assess the impact that variable background concentrations would have on the risk results. In addition, the Mercury Study received external peer review, whereas we have not conducted an external peer review of the current analysis.

In addition, there are a variety of uncertainties related to the fate and transport of mercury in the environment, such as the deposition of mercury emitted to the atmosphere via wet and dry removal processes, the transport of mercury deposited in upland areas of a watershed to a body of water, and the disposition of mercury in the water body itself, including methylation and demethylation processes, sequestering in the water column and sediments, and uptake in aquatic organisms. Furthermore, the form of mercury emitted by a given facility is thought to be a determining factor in the fate and transport of mercury in the atmosphere. Only limited data are available on the form of the mercury emitted from hazardous waste combustors. A more complete discussion of the uncertainties related to the fate and transport of mercury may be found in the Mercury Study Report to Congress.

Also important to consider is that the reference dose for methyl mercury represents a "no-effects" level that is presumed to be without appreciable risk. We used an uncertainty factor of 10 to derive the reference dose for methyl mercury from a benchmark dose that represents the lower 95% confidence level for the 10% incidence rate of neurologic abnormalities in children.[325] Therefore, there is a margin of safety between the reference dose and the level corresponding to the threshold for adverse effects, as indicated by the human health data. Furthermore, we applied the reference dose, which was developed for maternal exposures, to childhood exposures. This introduces additional uncertainty in the risk estimates for children. Additional uncertainties associated with assessing individual mercury risks to nonsubsistence populations and subsistence receptors are discussed under the "Human Health Risk Characterization" section below.

We do not know the direction or magnitude of many of the uncertainties discussed above and did not attempt to quantify the overall uncertainty of the analysis. Thus, the cumulative impact of these uncertainties is unknown, and the uncertainties implicit in the quantitative mercury analysis continue to be sufficiently great so as to limit its ultimate use for decision-making. Therefore, we have used the quantitative assessment to make qualitative judgments about the risks from mercury but have not relied on the quantitative assessment (nor do we believe it is appropriate) to draw quantitative conclusions about the risks associated with particular national emissions standards.

F. How Were Risks From Dioxins Evaluated?

Few changes have been made to the methods used for assessing risk from dioxins since proposal. Some commenters thought we should modify the toxicity equivalence factors that are used to characterize the relative risk from 2,3,7,8-chlorine substituted congeners relative to that from 2,3,7,8,-tetrachlorodibenzo(p)dioxin. As a matter of policy, we continue to use the international consensus values that were published by EPA in 1989. We are aware that revisions to the toxicity equivalence factors are being considered by the international scientific community. However, we have not adopted revised values and continue to use the 1989 toxicity equivalence factors.

We have changed the data being relied upon to characterize the bioaccumulation of dioxins in fish. Specifically, we believe that the biota-

[322] "Mercury Study Report to Congress, Volume III: Fate and Transport of Mercury in the Environment," U.S. Environmental Protection Agency, EPA-452/R-97-005, December 1997.

[323] "Study of Hazardous Air Pollutant Emissions from Electric Utility Steam Generating Units—Final Report to Congress," U.S. Environmental Protection Agency, EPA-453/R-98-004a and b, February 1998.

[324] For a discussion of the mercury surface water model, see the background document, "Human Health and Ecological Risk Assessment Support to the Development of Technical Standards for Emissions from Combustion Units Burning Hazardous Wastes: Background Document—Final Report," July, 1999.

[325] The uncertainty factor is intended to cover three areas of uncertainty: Lack of data from a two-generation reproductive assay; variability in the human population, in particular the wide variation in the distribution and biological half-life of methyl mercury; and lack of data on long term sequelae of developmental effects.

sediment accumulation factors used at proposal, which were derived from data for the Great Lakes, significantly understate the bioaccumulation potential in aquatic systems that have recent and ongoing contamination. Studies in Sweden and elsewhere show that where contamination is ongoing, biota-sediment accumulation factors may be higher by as much as an order of magnitude or more relative to the Great Lakes and other aquatic systems where levels in biota are influenced primarily by past contamination. For the risk assessment for today's rule, biota-sediment accumulation factors were derived from data collected by the Connecticut Department of Environmental Protection. The Connecticut study, which is discussed in detail in the dioxin reassessment, involved extensive monitoring of soils, sediments, and fish near resource recovery facilities operating in the state.[326] The data show biota-sediment accumulation factors that are a factor of two to nine times higher (depending on the individual congener) than those used previously.

G. How Were Risks from Lead Evaluated?

Risks from exposures to lead were assessed at proposal by comparing model-predicted lead levels in soil to a health-based soil benchmark criterion. Commenters pointed out that there are pathways of exposure other than those related to soils and that we should look at the overall impact of lead emissions on blood lead levels in children. We agree with these comments and have modified the risk assessment to include other pathways of exposure such as inhalation and dietary exposures, in addition to soil ingestion. The revised assessment employs the Intake/Exposure Uptake BioKinetic model to assess the incremental impact of lead intake on blood lead levels in children. The results of the blood lead modeling are used together with information on background levels of blood lead in the general population to estimate the number of children whose blood levels exceed 10 micrograms per deciliter. Our goal is to reduce children's blood lead to below this level.

H. What Analytical Framework Was Used To Assess Human Exposures and Risk?

As a result of the public and peer review comments received on the risk assessment at proposal, we modified the analysis to focus on the entire population of persons that are exposed to facility emissions rather than persons living on a few individual farms and residences. A study area was defined for each sample facility as the area surrounding the facility out to a distance of 20 kilometers (or about 12 miles). All persons residing within the study area were included in the analysis.[327] The study area was divided up into sixteen (16) sectors defined by the intersection of rings at two, five, ten and twenty kilometers and radii extending to the north, south, east, and west. For each sector, census data were used to estimate the population of those persons living in farm households by type of farm and the population of those persons living in non-farm households. Census data were also used to determine the age of all household members. Four age groups were delineated: Preschoolers (0 to 5 years), preteens (6 to 11 years), adolescents (12 to 19 years) and adults (20 years and older).

Within each study area, three or four bodies of water were chosen for analysis based on their proximity to the sample facility and the likelihood of their being used for recreational purposes, as indicated by factors such as size and accessibility. Water bodies were also chosen if they were used to supply drinking water to the surrounding community. The watershed of each water body was delineated out to a distance of 20 kilometers from the facility.

We conducted a multi-pathway exposure analysis for all the human receptors considered in the risk assessment. Household members regardless of the type of household were assumed to be exposed to facility emissions through direct inhalation and incidental ingestion of soil. In addition, in study areas where surface waters are used for drinking water, household members were also assumed to be exposed through tap water ingestion. A portion of non-farm households were assumed to engage in home gardening based on the prevalence of home gardening in national surveys. Farm households were assumed to consume the primary food commodity produced on the farm. This contrasts with the subsistence farmer who was assumed to consume predominantly home-produced foods, including meat, milk, poultry, fish, and eggs, as well as fruits and vegetables. For the purpose of characterizing the range of risks that could result from subsistence farming, it was assumed that a subsistence farm was located in every sector in a given study area. A portion of the households in each study area were assumed to engage in recreational fishing based on the prevalence of recreational fishing in national surveys. It was assumed that individual recreational anglers would fish at all of the water bodies delineated in a given study area. In contrast, households engaged in subsistence fishing were assumed to consume fish from only a single body of water. For the purpose of characterizing the range of risks that could result from subsistence fishing, the assumption was made that every body of water delineated in a given study area was used for subsistence fishing.

Air dispersion and deposition modeling were performed for each study area at all sample facilities using facility-specific information on stack configuration and emissions, along with site-specific meteorological data, terrain data (in areas of elevated terrain), and land use data. Air modeling was conducted to a distance of 20 kilometers. Long-range transport of emissions beyond this distance was not considered. Bioaccumulation in the terrestrial food chain was modeled from estimates of deposition and uptake in plants and subsequent uptake in agricultural livestock from consumption of forage and silage. Bioaccumulation in the aquatic food chain was modeled from estimates of deposition to watershed soils (and subsequent soil erosion and runoff) and direct deposition to water bodies and subsequent uptake in fish. Surface water modeling was conducted for each body of water using site-specific information relative to watershed size, surface runoff, soil erosion, water body size, and dilution flow.

Exposure modeling was performed using central tendency exposure factors (*e.g.*, duration of exposure and daily food intake) for all receptor populations. As noted below, an exposure variability analysis was also performed for selected constituents and receptor populations using exposure factor distributions. Exposure pathways varied depending on the particular human receptor and the types of activities that lead to human exposures. Age-specific rates of mean daily food intake and media contact rates, in conjunction with sector-specific media concentrations and concentrations in food, were used

[326] "Estimating Exposure to Dioxin-Like Compounds, Volume III: Site-Specfic Assessment Procedures, U.S. Environmental Protection Agency, External Review Draft, EPA/600/6-88/005Cc, June 1994

[327] Because the analysis at proposal indicated that exposures beyond 20 kilometers were well below levels of concern, we did not consider persons exposed to facility emissions that are transported beyond 20 kilometers. Also, as discussed elsewhere, the risk assessment was peer reviewed in accordance with EPA guidelines, and peer reviewes did not comment that the range of the local scale study area was insufficient (or recommend that it be increased to 50 or more kilometers).

to calculate the total (administered or potential) dose from all exposure pathways combined. Lifetime average daily dose was used as the exposure metric for assessing cancer risk and average daily dose (reflecting less than lifetime exposure) was used for assessing risks of non-cancer effects.

We estimated the risk of developing cancer from the estimated lifetime average daily dose and the slope of the dose-response curve. A cancer slope factor is derived from either human or animal data and is taken as the upper bound on the slope of the dose-response curve in the low-dose region, generally assumed to be linear, expressed as a lifetime excess cancer risk per unit exposure. Total carcinogenic risk was determined for each receptor population assuming additivity. The same approach was used for estimating cancer risks in both adults and children. This is also the same approach we used at proposal for estimating lifetime cancer risks stemming from childhood exposures. However, individuals exposed to carcinogens in the first few years of life may be at increased risk of developing cancer. For this reason, we recognize that significant uncertainties and unknowns exist regarding the estimation of lifetime cancer risks in children. Although the risk assessment at proposal was externally peer reviewed, EPA's charge to the peer review panel did not specifically identify the issue of cancer risk in children and the peer review panel did not address it.

To characterize the potential risk of non-cancer effects, we compared the average daily dose (reflecting less than lifetime exposure) to a reference dose and expressed the result as a ratio or hazard quotient. The reference dose is an estimate of a daily exposure to the human population, including sensitive subgroups, that is likely to be without an appreciable risk of deleterious effects during a lifetime. The hazard quotient, by indicating how close the average daily dose is to the reference dose, is a measure of relative risk. However, the hazard quotient is not an absolute measure of risk. For inhalation exposures, we compared modeled air concentrations to a reference concentration and expressed the result as a ratio or inhalation hazard quotient. The reference concentration is an estimate of a concentration in air that is likely to be without an appreciable risk of deleterious effects in the human population, including sensitive subgroups, from continuous exposures over a lifetime. In addition, inhalation and ingestion hazard indices were generated for each receptor population by adding the constituent-specific hazard quotients by route of exposure. The hazard index is an indicator of the potential for risk from exposures to chemical mixtures.

For dioxins, we used a margin of exposure approach to assess the potential risks of non-cancer effects. The average daily dose, in terms of 2,3,7,8-TCDD toxicity equivalents (TEQ), was compared to background TEQ exposures in the general population and expressed as a ratio or incremental margin of exposure. An incremental margin of exposure was generated for infants exposed through intake of breast milk and for other age groups exposed through dietary intake and other pathways of exposure. For lead, we characterized the risk of adverse effects in children by modeling body burden levels in blood that result from intake of lead in the diet, direct inhalation, and incidental soil ingestion and comparing these levels to levels at which community-wide efforts aimed at prevention of elevated blood levels are indicated.

Distributions of individual risk were generated for a given category of sources by weighting the individual risks using sector-specific population weights and facility-specific sampling weights. Such distributions, which were derived using central tendency exposure factors, were generated for all constituents and receptor populations. In addition, for those receptor populations and chemical constituents that exhibited risks within an order of magnitude of a potential level of concern (using central tendency exposure factors), we performed an exposure variability analysis. Normalized, age-specific distributions of food intake and exposure duration were used to adjust the risk estimates to generate a distribution of risks in each sector. For children, food intake changes significantly with age, which can affect the lifetime average daily dose. To adjust for this, a life table analysis was conducted in which individuals were followed over the duration of exposure to arrive at an age adjustment factor. The individual sector distributions were combined for a given source category using Monte Carlo sampling and the appropriate sector-specific population weights and facility-specific sampling weights.

Estimates of population risk, or the incidence of health effects in the exposed population, were made for selected receptor populations and chemical constituents. Local excess cancer incidence was estimated from the mean individual risk for a given sector and the number of persons who reside in a sector. These sector-specific cancer incidence rates were then adjusted using facility-specific sampling weights and summed for a given category of sources. Cancer incidence associated with the consumption of dioxin contaminated beef, pork, and milk by the general population was estimated at the sector level from the number of dairy cattle and the number of beef cattle and hogs slaughtered annually, adjusted using facility-specific sampling weights, and summed by source category. Excess incidence of lead poisoning in children (over and above background) was estimated at the sector level from the intake of lead in the diet, direct inhalation, and incidental soil ingestion, adjusted using facility-specific sampling weights, and summed.

Generally speaking, incidence rates for non-cancer effects can be estimated from the number of persons exposed above the reference dose (*i.e.*, the number of exceedances) and the annual turnover in the exposed population. However, non-cancer incidence rates of interest, such as the incidence of exceedances of the methyl mercury reference dose from consumption of freshwater fish, could not be estimated due to the difficulty in determining the number and frequency of visits made by recreational anglers to a given body of water. However, by making certain assumptions, it was possible to make an estimate of the portion of recreational anglers who consume fish from local water bodies that may be at risk.[328]

Due to concerns of commenters about the representativeness of the risk assessment, we also made estimates of confidence intervals about the risk estimates. Estimation of confidence intervals was made possible by virtue of the sampling design used for facility selection. The confidence intervals quantify the magnitude of the uncertainty of the risk estimates associated with sampling error only. We emphasize that the confidence intervals do not reflect other sources of uncertainty, which may be of considerably greater magnitude.

In addition to the risk estimates for individual chemical constituents, we estimated the incidence of excess mortality and morbidity associated with particulate matter emissions. Mortality and morbidity estimates were made for children and the elderly, as well as the general population, using concentration-response functions derived from human epidemiological studies. Incidence rates

[328] The assumption is that fishing activity typical of recreational fishing takes place only at the particular water bodies delineated in the analysis.

in a given sector were estimated from the size of the exposed population, including susceptible populations such as children and the elderly, and either annual mean PM_{10} and $PM_{2.5}$ concentrations or distributions of daily PM_{10} and $PM_{2.5}$ concentrations. Morbidity effects include respiratory and cardiovascular illnesses requiring hospitalization, as well as other illnesses not requiring hospitalization, such as acute and chronic bronchitis, acute upper and lower respiratory symptoms, and asthmatic attacks. As with other incidence estimates, sector-specific incidence rates were adjusted using facility-specific sampling weights and summed for a given source category.

I. What Analytical Framework Was Used to Assess Ecological Risk?

Public comments on the ecological assessment at proposal expressed the view that we should expand the assessment beyond water quality criteria. We agree with these commenters and have extended the ecological analysis to include the use of soil and sediment criteria, in addition to water quality criteria. Also, the analysis was expanded to include additional metals that are of ecological concern, such as mercury and copper.

The ecological assessment represents a screening level analysis that uses media-specific ecological criteria thought to be protective of a range of ecological receptors. Modeled surface water concentrations were compared to water quality criteria protective of aquatic life, such as algae, fish, and aquatic invertebrates, as well as piscivorous wildlife. Similarly, modeled soil concentrations were compared to soil criteria protective of the terrestrial soil community, as well as terrestrial plants and mammalian and avian wildlife. Modeled sediment concentrations were compared to sediment criteria protective of the benthic aquatic community. As a screening level analysis, we did not attempt to determine whether the specific ecological receptors upon which the media-specific criteria are based are actually present at a given site. Furthermore, we did not ascertain the occurrence of threatened or endangered species at individual sites. However, the ecological receptors upon which the media-specific criteria are based are commonly occurring species and may not be any less sensitive than other species and may be more sensitive than some, including perhaps threatened or endangered species.[329]

II. How Were Human Health Risks Characterized?

This section describes the conclusions of the human health risk assessment. For a full discussion of the methodology and the results of the assessment, see the background document for today's rule.[330]

A. What Potential Health Hazards Were Evaluated?

This section summarizes the potential health hazards from exposures to emissions from hazardous waste combustors, in particular the human health hazards associated with the chemical constituents evaluated in the risk assessment, including dioxins, mercury, lead, other metals, hydrogen chloride and chlorine, and particulate matter.

1. Dioxins

A large body of evidence demonstrates that chlorinated dibenzo(p)dioxins and dibenzofurans can have a wide variety of health effects, ranging from cancer to various developmental, reproductive and immunological effects. Dioxins are persistent and highly bioaccumulative in the environment and most human exposures occur through consumption of foods derived from animal products such as meat, milk, fish, poultry, and eggs. In 1985, we developed a carcinogenic slope factor for 2,3,7,8-TCDD of 1.56e−4 per picogram per kilogram body weight per day.[331] The slope factor represents the 95 percent upper confidence limit estimate of the lifetime excess cancer risk. Re-analysis of data from laboratory animals and cancer in humans lends support to the slope factor derived in 1985, and we continue to use the 1985 estimate pending completion of our dioxin reassessment.[332] [333]

For non-cancer effects, we believe it is inappropriate to develop a reference dose, or level which is without appreciable risk, using standard uncertainty factors. This is due to the high levels of background exposures in the general population and the low levels at which effects have been seen in laboratory animals. Instead, we have chosen to use a margin of exposure approach in which the average daily dose from a given facility is compared to the average daily dose in the general population. The ratio of the two represents the incremental margin of exposure and, as such, measures the relative increase in exposures over background.

2. Mercury

The most bioavailable form of mercury is methyl mercury, and most human exposures to methyl mercury occur through consumption of fish. Methyl mercury is known to cause neurological and developmental effects in humans at low levels. The most susceptible human population is thought to be developing fetuses. We have developed a reference dose for methyl mercury of 0.1 microgram per kilogram body weight per day that is presumed to be protective of the most sensitive human populations.[334] The reference dose is based on neurotoxic effects observed in children exposed *in utero*. Although epidemiological studies in fish-eating populations are ongoing, we believe that the reference dose is the best estimate at the present time of a daily exposure that is likely to be without an appreciable risk of deleterious effects. However, because it was derived from maternal exposures, application of the reference dose to assess children's exposures carries with it additional uncertainty beyond that otherwise related to the data and methods used for its development.

3. Lead

Exposures to lead in humans are associated with toxic effects in the nervous system at low doses and at higher doses in the kidneys and cardiovascular system. Infants and children are particularly susceptible to

[329] Multiple ecological criteria were available for most constituents and the lowest criteria were used to establish the media-specific values that were in the eco-analysis. In addition, ecotoxicological benchmarks for mammals and birds were typically derived from studies involving measures of reproductive success.

[330] "Human Health and Ecological Risk Assessment Support to the Development of Technical Standards for Emissions from Combustion Units Burning Hazardous Wastes: Background Document—Final Report," July 1999.

[331] USEPA, "Health Assessment Document for Polychlorinated Dibenzo-p-Dioxins," EPA/600/8-84-014F, September 1985.

[332] USEPA, "Health Assessment Document for 2,3,7,8-Tetrachlorodibenzo-p-Dioxin (TCDD) and Related Compounds," External Review Draft, EPA/600/BP-92/001b, June 1994.

[333] USEPA, "Dose Response Modeling of 2,3,7,8-TCDD," Workshop Review Draft, EPA/600/P-92/100C8, January 1997.

[334] USEPA, "Mercury Study Report to Congress," EPA-452/R-97-007, December 1997.

[335] For a complete description of the derivation of the chronic toxicity benchmark for chlorine, see the

the effects of lead due to behavioral characteristics such as mouthing behavior, heightened absorption in the respiratory and gastrointestinal tracts, and the intrinsic sensitivity of developing organ systems. Symptoms of neurotoxicity include impairment in psychomotor, auditory, and cognitive function. These effects extend down to levels in blood of at least 10 micrograms lead per deciliter. Impairment of intellectual development, as measured by standardized tests, is thought to occur at levels below 10 micrograms per deciliter. Maternal lead exposure has been shown to be a risk factor in premature infant mortality, lead being associated with reduced birth weight and decreases in gestational age. Lead has also been associated with hypertension in both men and women and, as such, may be a risk factor for coronary disease, stroke, and premature mortality. Although dose-response relationships have been developed between blood lead levels and many of these health effects, EPA has not applied the relationships in the HWC risk analysis due to uncertainties related to the relatively small changes in blood lead expected to occur as a consequence of the MACT standards and the uncertain significance of any health benefits that might be attributed to such changes. Instead, our characterization of risks from lead focuses on the reductions in blood levels themselves and EPA's goal of reducing blood lead in children to below 10 micrograms per deciliter.

4. Other Metals

Metals that pose a risk for cancer include arsenic, cadmium, and chromium. Human epidemiological studies have shown an increase in lung cancer from inhalation exposures to arsenic, primarily in occupationally exposed individuals, and multiple internal cancers (such as liver, lung, kidney, and bladder), as well as skin cancer, from exposures to arsenic through drinking water. Human epidemiological studies have also shown an association between exposures to cadmium and lung cancer in occupational settings. These studies have been confirmed by animal studies which have shown significant increases in lung tumors from inhalation exposures to cadmium. However, cadmium administered orally has shown no evidence of carcinogenic response. A strong association between occupational exposures to chromium and lung cancer has been found in multiple studies. Although workers were exposed to both trivalent and hexavalent chromium, animal studies have shown that only hexavalent chromium is carcinogenic. There have been no studies that have reported that either hexavalent or trivalent chromium is carcinogenic by the oral route of exposure.

Other metals may pose a risk of noncancer effects. For example, in animal studies thallium has been shown to have ocular, neurological, and dermatological effects and effects on blood chemistry and the reproductive system. Signs and symptoms of similar and other effects have been observed in occupational studies of thallium exposures.

5. Hydrogen Chloride

Data on the effects of low-level inhalation exposures to hydrogen chloride are limited to studies in laboratory animals. Based on a lifetime study in rats which showed histopathological changes in the nasal mucosa, larynx, and trachea associated with exposures to hydrogen chloride, we estimated a reference concentration of 0.02 milligrams per cubic meter. The reference concentration was derived from a human equivalent lowest observed adverse effects level of 6 milligrams per cubic meter using an uncertainty factor of 300 to account for extrapolation from a lowest observed adverse effects level to a no observed adverse effects level, as well as extrapolation from animals to humans (including sensitive individuals).

6. Chlorine

Chlorine gas is a potent irritant of the eyes and respiratory system. Based on a lifetime study in rats and mice which showed histopathological changes affecting all airway tissues in the nose, we derived an interim chronic toxicity benchmark for chlorine gas of 0.001 milligrams per cubic meter. This value was derived from a human equivalent no observed adverse effects level of 0.04 milligrams per cubic meter and an uncertainty factor of 30 to account for extrapolation from animals to humans (including sensitive individuals). The human equivalent no observed adverse effects level from this study is also supported by a year-long study in monkeys.[335]

[335] For a complete description of the derivation of the chronic toxicity benchmark for chlorine, see the background document, "Human Health and Ecological Risk Assessment Support to the Development of Technical Standards for Emissions from Combustion Units Burning Hazardous Wastes: Background—Final Report," July, 1999.

B. What Are the Health Risks to Individuals Residing Near HWC Facilities?

In this section, we address risks to populations that could be enumerated using estimation methods based on U.S. Census data and Census of Agriculture data. Estimates of the population of persons residing within 20 kilometers of hazardous waste combustion facilities were made for beef, dairy, produce, and pork farming households and for non-farm households. The number of home gardeners was estimated using national survey data on the portion of households that engage in home gardening. Estimates were made for each of four different age groups. In addition, population estimates were made for recreational anglers age 16 and older based on U.S. Fish and Wildlife Service survey data on recreational fishing and hunting.[336]

The risks to individuals of carcinogenic effects are expressed as the estimated increase in the probability that an individual will develop cancer over a lifetime. For non-cancer effects, risks are expressed as a hazard quotient, which is the ratio of an estimate of an individual's exposure to a health benchmark thought to be without appreciable risk. Both cancer and non-cancer risks are summarized in terms of percentiles of the national distribution of risks to individuals across a combustor category. High end risks are represented by the 90th to 99th percentiles of the distribution. Distributions for only the most highly exposed receptor populations are discussed here. The most highly exposed population varies depending on the particular chemical constituent, its fate and transport in the environment, and the pathways that lead to human exposures. Also, 90 percent confidence limits are estimated for each percentile. The size of the confidence interval reflects sampling error which is introduced by not sampling all the facilities in a given category of sources.[337] In some instances, estimates of the 90 percent confidence limits could not be made either because there were too few data points or there was insufficient spread in the data. For lightweight aggregate kilns, there is no sampling error because the sample included all known

[336] However, it was not possible to determine the number of recreational anglers that fish specifically at water bodies located in the vicinity of hazardous waste combustion facilities, such as those that were selected for modeling analyses.

[337] A 90 percent confidence interval indicates that there is a 10 percent chance that the actual value could lie outside the interval indicated, either higher or lower.

hazardous waste burning lightweight aggregate kilns.

1. Dioxins

For dioxins, our analysis shows that the most exposed population is children of dairy farmers who consume home-produced milk. High exposures were estimated for this population due to the relatively high consumption of milk by households that consume home-produced milk, the relatively high intake of milk by children compared to other age groups, and the tendency of chlorinated dioxins and furans to bioaccumulate in milk fat. A distribution of cancer risks for dioxins was generated which reflects variability in individual exposures due to site-specific differences in dioxin emissions, location of exposure, and other factors, as well as differences between individuals in exposure factors such as the length of exposure and the amount of milk consumed.

As a result of today's rule, we project that high end lifetime excess cancer risks will be reduced in this population from 2 in 100,000 (99th percentile) for both lightweight aggregate kilns and incinerators with waste heat recovery boilers to below one in one million (99th percentile) for lightweight aggregate kilns and 1 in one million (99th percentile, 90 percent upper confidence limit of 2 in one million) for incinerators with waste heat recovery boilers. For cement kilns, high end lifetime excess cancer risks are reduced only slightly, from 7 in one million (99th percentile) to 5 in one million (99th percentile). These reductions, which represent the reduction in the increment of exposure that results from dioxin emissions from hazardous waste combustors, are relatively small in relation to background exposures to dioxins generally. Considering that the number of individuals in the affected population is relatively small, only a few individuals may benefit from such reductions.

We also project that the incremental margin of exposure relative to background will be reduced in the same population from 0.2 (99th percentile for lightweight aggregate kilns) and 0.3 (99th percentile for incinerators with waste heat recovery boilers, 90 percent upper confidence limit of 0.5) to below 0.1 across all categories of combustors. Therefore, the risks associated with non-cancer effects from hazardous waste combustors are an order of magnitude or more lower than any (unknown and unquantifiable) risks that may be attributable to background exposures.

Unlike the distribution of cancer risks, the distribution of the margin of exposure reflects only site-to-site differences and does not reflect differences between individuals in the amount of milk consumed. Therefore, the exposures at the upper percentiles are likely to be underestimated.[338] Additional uncertainty is introduced because background exposures to dioxins in children have not been well characterized.

Other uncertainties include milk consumption rates and the limitations of the data available to assess consumption of home-produced milk. In addition, there are a variety of uncertainties related to the fate and transport of dioxins in the environment, including partitioning behavior into vapor and particle phases following release to the atmosphere and subsequent deposition via various wet and dry removal processes, uptake in plants such as forage and silage used by dairy cows for grazing and feeding, and the factors which affect the disposition of dioxins in dairy cattle and the extent of bioaccumulation in cow's milk.

2. Mercury

For mercury, our analysis shows that the most exposed population is recreational anglers and their families who consume recreationally-caught freshwater fish. This is because methyl mercury is readily formed in aquatic ecosystems and bioaccumulates in fish. Children have the highest exposures due to their higher consumption of fish, relative to body weight, compared to adults. Risks from exposures to methyl mercury are expressed here in terms of a hazard quotient, which is defined as the ratio of the modeled average daily dose to our reference dose. Although the reference dose was developed to be protective of exposures *in utero*, we applied the reference dose not just to maternal exposures but also to non-maternal adult and childhood exposures based on the presumption that the reference dose should be protective of neurological and developmental effects in these populations as well.

A distribution of hazard quotients was generated that reflects variability in individual exposures due to site-specific differences in mercury emissions, location of water bodies, and other factors, as well as differences between individuals in the amount of fish consumed. Other factors, such as water body-specific differences in the extent of methylation of inorganic mercury and the age and species of fish consumed were not reflected in the risk distribution. However, it is unclear what effect such factors would have on the distribution given the high degree of variability that is attributable to the factors that were considered in our analysis.

The results of our quantitative analysis for mercury are as follows. For cement kilns, we project that high end hazard quotients in adults will be reduced from a range of 0.09 to 0.4 (90th percentile, upper confidence limit of 0.1, and 99th percentile, respectively) at baseline to a range from 0.06 to 0.2 under today's rule (90th percentile, upper confidence limit of 0.08, and 99th percentile, respectively). In children, high end hazard quotients are projected to be reduced from a range of 0.2 to 0.8 (90th percentile, upper confidence limit of 0.3, and 99th percentile, respectively) at baseline to a range of 0.2 to 0.6 under today's rule (90th percentile, upper confidence limit of 0.2, and 99th percentile, respectively). For lightweight aggregate kilns, high end hazard quotients in both adults and children are below 0.1 at baseline and under today's rule. For incinerators, high end hazard quotients are below 0.01 in adults and below 0.1 in children at baseline and under today's rule. Taken together, these results appear to suggest that risks from mercury emissions (on an incremental basis) are likely to be small, although we cannot be certain of this for the reasons discussed below.

The risk results for mercury are subject to a considerable degree of uncertainty. In addition to the uncertainties discussed above in "Overview of Methodology—Mercury", there are other uncertainties when assessing individual mercury risks to nonsubsistence populations. In order to assess exposures to mercury emissions, we assumed that recreational anglers fish only at the water bodies within a given study area that were selected for modeling (and at no other water bodies) and that the extent of fishing activity at a given water body is related to the size of the water body.[339] As a result, in those situations where relatively low fish concentrations were modeled (and particularly if the water body was relatively large), a large portion of fish were assumed to have relatively low levels of mercury contamination and, therefore, recreational anglers who consume relatively large amounts of recreationally-caught fish were estimated to have relatively low levels

[338] The precise extent of underestimation at the upper percentiles associated with variability in milk consumption is unknown but is expected to be a factor of two.

[339] Ideally, detailed information on the fishing activities of individual anglers, including the size of the catch taken from individual locations, would be used to better assess exposures from consumption of recreationally-caught fish.

of exposure. In reality, some portion of the fish consumed by recreational anglers is likely to be contaminated with mercury at levels typical of background conditions. The effect of such background exposures is to increase actual exposures, except perhaps at the high end of the exposure distribution.[340]

We believe that the uncertainties implicit in the quantitative mercury analysis continue to be sufficiently great so as to limit its ultimate use for decision-making. Therefore, we have used the quantitative analysis to make qualitative judgments about the risks from mercury but have not relied on the quantitative analysis (nor do we believe it is appropriate) to draw quantitative conclusions about the risks associated with the MACT standards.

3. Lead

For lead, children are the population of primary concern for several reasons, including behavioral factors, absorption, and the susceptibility of the nervous system during a child's development. We have chosen to use blood lead level as the exposure metric, consistent with the U.S. Centers for Disease Control criteria for initiating intervention efforts. Lead exposures occur through a variety of pathways, including inhalation, incidental ingestion of soil and household dust, and dietary intake. Our analysis indicates that the population having the highest exposures are children who consume home-produced fruits and vegetables. However, children who do not consume home-produced foods also have relatively high exposures due to incidental ingestion of soil and household dust.

Blood lead distributions were generated that represent incremental exposures to lead emissions from hazardous waste combustors. These distributions reflect variability in individual exposures due to site-specific differences in lead emissions, location of exposure, and other factors, as well as differences between individual children in behavior patterns, absorption, and other pharmacokinetic factors. The IEUBK model that was used to estimate blood lead levels considers inter-individual variability in behavior related to lead exposure, such as mouthing activity. However, the model does not explicitly consider variability for the specific dietary pathways assessed for children of home gardeners, that is, consumption of home-produced fruits and vegetables. Therefore, the blood lead distributions may not fully reflect inter-individual variability that results from such individual differences.

Modeled blood lead (PbB) levels can be compared with background exposures in the same age group (children ages 0 to 5 years) in the general population. The median blood lead level in children in the general population is 2.7 micrograms per deciliter (μg/dL), and 4.4 and 1.3 percent of children have blood lead levels that exceed 10 and 15 μg/dL, the levels at which community wide prevention and individual intervention efforts, respectively, are recommended.[341] However, the percentages vary widely depending on such factors as race, ethnicity, income, and age of the housing units occupied. Children whose blood lead levels are already elevated are the most susceptible to further increases in blood lead levels.

As a result of today's rule, we project that high end (90th to 99th percentile) incremental blood lead (PbB) levels in children will decrease from 0.24 to 0.50 micrograms per deciliter to 0.02 to 0.03 μg/dL for cement kilns. For incinerators, incremental PbB levels are projected to decrease from 0.6 to 1.2 μg/dL (90th to 99th percentile) to 0.02 to 0.03 μg/dL. For lightweight aggregate kilns, incremental PbB levels are projected to decrease from 0.02 to 0.03 μg/dL (90th to 99th percentile) to less than 0.01 μg/dL under the MACT standards. Although these reductions in incremental exposures represent only a fraction of the PbB level of concern (10 μg/dL), they can be significant in children with PbB levels that are already elevated from exposures to other sources of lead. In addition, there is evidence that effects on the neurological development of children may occur at blood lead levels so low as to be essentially without a threshold. Under the MACT standards, blood lead levels attributable to HWCs will be one percent or less of background levels typical of children in the general population.

4. Other Metals

We assessed both direct and indirect human exposures to a dozen different metals in addition to mercury. Exposures to non-mercury metals are generally quite low. Under today's rule, we project that lifetime excess cancer risks from exposures to carcinogenic metals (i.e., arsenic) will be below 1 in 10 million for all source categories. Hazard quotients for all source categories are projected to be at or below 0.01 (99th percentile) for all non-mercury metals under the MACT standards. These risks reflect variability in individual exposures due to site-specific differences in emissions, location of exposure, and other factors. However, the risks do not reflect differences between individuals in exposure factors such as the length of exposure and the amount of food ingested. Therefore, we may have underestimated risks at the upper percentiles of the distribution.[342] A full exposure factor variability analysis was not carried out because the risks using mean exposure factors are comparatively low. Risks from exposure to metals are also subject to uncertainty related to modeling of fate and transport in the environment such as deposition of airborne metals to soils, forage, and silage and subsequent uptake in farm animals.

5. Inhalation Carcinogens

We also assessed the combined cancer risk associated with inhalation exposures to all inhalation carcinogens, assuming additivity of the risks from individual compounds. The populations that have the highest inhalation exposures are adult farm or non-farm residents. Adults have the longest exposure duration relative to other age groups and adult farmers have less mobility and, therefore, longer durations of exposure than non-farm residents. However, depending on the location of farms and non-farm households, adult non-farm residents can have lifetime average exposures that are as high as adult farm residents.

Under today's rule, we project that lifetime excess cancer risks from inhalation exposures will be below 1 in 10 million for all source categories. The risks for inhalation carcinogens reflect variability in individual exposures due to site-specific differences in metals emissions, location of exposure, and other factors. However, they do not reflect differences between individuals

[340] We have previously estimated that median exposures to methyl mercury in the general population from seafood consumption are in the range of 0.01 to 0.03 μg/kg BW/day (Mercury Study Report to Congress, December 1997). These exposures correspond to hazard quotients of 0.1 to 0.3, values which (except for cement kilns) are higher than the 90th to 99th percentile hazard quotients estimated here for incremental exposures among recreational anglers.

[341] Data from the Centers for Disease Control's National Health and Nutrition Examination survey (NHANES III, phase 2) conducted from October 1991 to September 1994.

[342] For dioxins, inclusion of exposure factor variability increased the risk of cancer at the upper (90th to 99th) percentiles by less than a factor of two to a factor of five. However, the effect on the distribution of risks could differ for metals depending on the health effect of concern (i.e., cancer versus non-cancer), the pathway of exposure, and relative differences in the site-to-site variability of emissions.

in the length of exposure or other exposure factors. Therefore, we may have underestimated risks at the upper percentiles of the distribution.[343] A full exposure factor variability analysis was not carried out for inhalation carcinogens because the risks using mean exposure factors are comparatively low.

Estimates of inhalation risks are subject to a number of uncertainties. Individuals spend a majority of their time indoors and it is uncertain how representative modeled, outdoor, ambient air concentrations are of concentrations indoors. Also, the daily activities of individuals living in the vicinity of a given facility will tend to moderate actual exposures compared to modeled exposures at a fixed location. Meteorological information was generally obtained from locations well removed from modeled facilities and, therefore, may not be representative of conditions in the immediate vicinity of the stack. Limited information was available on the size of structures located near or adjacent to stacks at the modeled facilities. Building downwash, that can result from the presence of such structures, may significantly increase ground-level ambient air concentrations, particularly at locations that are relatively close to the point of release. In addition, the effect of elevated terrain was only considered when the terrain rose above the height of the stack. However, elevated terrain below stack height can lead to an increase in ground-level concentrations depending on the distance from the stack. Nevertheless, our projections of inhalation cancer risks are sufficiently low that we do not believe the uncertainties introduced by these factors impacts our conclusion that these risks are relatively low.

6. Other Inhalation Exposures

Of the compounds we evaluated that are not carcinogenic, the highest inhalation exposures are for hydrogen chloride and chlorine gas. We express the risks from these in terms of an inhalation hazard quotient, which is defined as the ratio of the modeled air concentration to our reference concentration. The receptor population with the highest inhalation hazard quotients is variable and depends on site-to-site differences in the location of farm and non-farm households and differences in emissions. A distribution of hazard quotients was generated that reflects variability in individual exposures due to site-specific differences in chlorine emissions, location of exposure, and other factors. However, the distribution does not reflect individual differences in activity patterns or breathing rates.[344] Also, because the reference concentration is intended to be protective of long-term, chronic exposures over a lifetime, the distribution does not reflect temporal variations in exposure.[345]

Under today's rule, we project that inhalation hazard quotients will be at or below 0.01 for both hydrogen chloride and chlorine gas for all source categories. The same uncertainties related to indoor versus outdoor concentrations and atmospheric dispersion modeling are also applicable to hydrogen chloride and chlorine. However, our projections of non-cancer inhalation risks are sufficiently low that we do not believe the uncertainties impact our conclusion that these risks are relatively low.

C. What Are the Potential Health Risks to Highly Exposed Individuals?

We also assessed exposures to individuals that could be more highly exposed than the populations that could be characterized using census data. These include persons engaged in subsistence activities such as farming and fishing. Although the frequency of these activities is unknown, such activities do occur in some segments of the U.S. population, and we believe that it is important to evaluate risks associated with such activities. In addition, risks associated with subsistence farming place a bound on potential risks to farmers who raise more than one type of livestock. Information on the numbers of farms that produce more than one food commodity (*e.g.*, beef and milk) is not available from the U.S. Census of Agriculture. Therefore, in assessing risks to farm populations, we may have underestimated the risks to farmers and their families that consume more than one type of home-produced food commodity.

We assumed that subsistence farmers obtain substantially all of their dietary intake from home-produced foods, including meats, milk, poultry, fish, and fruits and vegetables. We used data on the mean rate of consumption of home-produced foods in households that consume home-produced foods to estimate the average daily intakes from subsistence farming. For subsistence fishing, we used data on the mean rate of fish consumption among Native American tribes that rely on fish for a major part of their dietary intake.

We do not have specific information on the existence or location of subsistence farms or water bodies used for subsistence fishing at sites where hazardous waste combustors are located. Therefore, we hypothetically assumed that subsistence farming does occur at each of the modeled facilities and, furthermore, that it occurs within each of the sixteen sectors within a study area. We also assumed that subsistence fishing takes places at each of the modeled water bodies. The results of the analysis are summarized in the form of frequency distributions of individual risk. The distributions must be interpreted in relation to the frequency of the modeled scenarios and not the likelihood of such exposures actually occurring.[346]

The risk results for subsistence receptors are highly uncertain, primarily due to the lack of information on the location of subsistence farms (or even the occurrence of subsistence farms within the study area of a given facility) and the assumption that individuals engaged in subsistence farming obtain essentially their entire dietary intake from home-produced foods.

1. Dioxins

Under today's rule, we project that lifetime excess cancer risks from dioxin exposures associated with subsistence farming will be below 1 in 100,000 for all categories of combustors, with the exception of cement kilns at the lowest frequency of occurrence. The lifetime excess cancer risk for cement kilns is estimated to be 2 in 100,000 at a frequency of 1 percent. This indicates that only 1 in 100 sectors are expected to have risks of this magnitude or greater, assuming that subsistence farms are located in all sectors at all hazardous waste burning cement kilns. However, because the sectors increase in size with increasing distance, the probability that a subsistence farm would be exposed to

[343] The precise extent of underestimation at the upper percentiles associated with variability in the duration of exposure is unknown but is expected to be a factor of three or less.

[344] Differences in breathing rates are not considered because the exposure factors used in deriving the reference concentration are fixed.

[345] Although short-term exposures to hydrogen chloride and chlorine gas resulting from routine releases can be significantly higher than long-term exposures, we do not believe that such exposures are high enough to pose a health concern because the threshold for acute effects is quite high in comparison to that for chronic effects.

[346] Moreover, the modeled scenarios cannot be considered equally probable because the sectors in which farms were located are of unequal area, being much smaller closer to a facility and much larger farther away and because any particular sector may be more or less likely to support farming activities depending on soils, precipitation, existing land uses, and other conditions. Similarly, the modeled water bodies may be more or less likely to support intensive fishing activity depending on their size, productivity, and other characteristics.

this level of risk is probably considerably less than 1 percent.

We project that the incremental margin of exposure relative to background will be reduced to 0.1 or below for incinerators under today's rule except at the lowest frequency of occurrence (*i.e.*, 1 percent) for which a margin of exposure of 0.2 is projected. However, the incremental margins of exposure for cement kilns and lightweight aggregate kilns are projected to remain above 0.1 at a frequency of 10 percent or greater (ranging up to 0.2 at a frequency of 5 percent for lightweight aggregate kilns and 0.7 at a frequency of 1 percent for cement kilns). This indicates that more than 1 in 10 sectors are expected to have risks associated with non-cancer effects that are within an order of magnitude of any (unknown and unquantifiable) risks that may be attributable to background exposures. However, for the reasons stated previously, the probability that a subsistence farm would be exposed to this level of risk is probably considerably lower than indicated by the number of sectors.

Under today's rule, we project lifetime excess cancer risks from dioxin exposures associated with subsistence fishing will be below 1 in one million for incinerators and lightweight aggregate kilns. For cement kilns, high end cancer risks under today's rule range from 3 in one million to 4 in one million (at frequencies of 10 and 5 percent, respectively) in adults and from 2 in one million to 4 in one million (at frequencies of 10 and 5 percent, respectively) in children (6 to 11 years of age). We project that the incremental margin of exposure relative to background will be below 0.1 for subsistence fishing for both children and adults for all categories of combustors under today's rule.

2. Metals

Our analysis indicates that the highest risks from metals (other than mercury) are from arsenic, thallium, and lead. Under today's rule, we project that lifetime excess cancer risks from arsenic exposures associated with subsistence farming will be below 1 in one million for all source categories. Hazard quotients for thallium are projected to be at or below 0.01 (99th percentile) under today's rule, except for cement kilns. For cement kilns, hazard quotients for thallium are projected to range from 0.03 to 0.4 (90th to 99th percentiles). Incremental blood lead levels are projected to be at or below 0.03 µg/dL for all source categories under today's rule. Blood lead at these levels are about one percent of background levels typical of children in the general population.

3. Mercury

From the results of our quantitative analysis we project that, under today's rule, hazard quotients for incremental exposures to mercury associated with subsistence fishing will be at or below 1 in both adults and children. These results apply to incinerators, lightweight aggregate kilns, and cement kilns at the very lowest frequency of occurrence that was analyzed (*i.e.*, 1 percent).

The risk results for mercury are subject to a considerable degree of uncertainty. In addition to the uncertainties discussed above in "Overview of Methodology—Mercury", there are other uncertainties when assessing individual mercury risks to subsistence receptors. We assumed that individuals engaged in subsistence fishing obtain all the fish they consume from a single water body. To the extent that individuals may fish at more than one water body, the effect of this assumption may be to exaggerate the risk from water bodies having relatively high modeled fish concentrations.

The uncertainties implicit in the quantitative mercury analysis continue to be sufficiently great so as to limit its ultimate use for decision-making. Therefore, we have used the quantitative analysis to make qualitative judgments about the risks from mercury but have not relied on the quantitative analysis (nor do we believe it is appropriate) to draw quantitative conclusions about the risks associated with the MACT standards.

D. What Is the Incidence of Adverse Health Effects in the Population?

We estimated the overall risk to human receptor populations for those chemical constituents that posed the highest individual risks and whose populations could be enumerated. These included excess cancer incidence in the general population from the consumption of agricultural commodities produced in the vicinity of hazardous waste burning facilities, excess cancer incidence in the local population, and excess incidence of children with elevated blood lead levels. In addition, we estimated the avoided incidence of mortality and morbidity in the local population associated with reductions in exposures to particulate matter emissions.[347]

Incidence is generally expressed in terms of the annual number of new cases of disease in the exposed population. However, for diseases such as cancer which have a long latency period, the annual incidence represents the lifetime incidence associated with an exposure of one year. For diseases with recurring symptoms, the annual incidence represents the number of episodes of disease over a year's time.

1. Cancer Risk in the General Population

Agricultural commodities produced in the vicinity of hazardous waste combustors may be consumed by the general population (*i.e.*, individuals who reside outside the study area). Commodities such as meat and milk may be contaminated with dioxins and, therefore, pose some risk to individuals that consume them. We estimated the amount of "diet accessible" dioxin in meat and milk produced at hazardous waste combustors that would be consumed by the general population and estimated the number of additional cancer cases that could result from such exposures. The approach is predicated on the assumption that cancer risks follow a linear, no-threshold model in the low dose region.

Our agricultural commodity analysis indicates that, as a result of today's rule, annual excess cancer incidence in the general population will be reduced from 0.5 cases per year (90 percent confidence interval, 0.4 to 0.6) to 0.1 cases per year (90 percent confidence interval, 0.1 to 0.2). Most of the risk is associated with the consumption of milk and other dairy products. The combustor categories that contribute most to the reduction are incinerators with waste heat recovery boilers and lightweight aggregate kilns.

2. Cancer Risk in the Local Population

Individuals that live and work in the vicinity of hazardous waste combustors are exposed to a number of compounds that are carcinogenic by oral or inhalation routes of exposure or both. These include dioxin, arsenic, beryllium, cadmium, chromium, and nickel. We estimated the annual cancer incidence in each of the enumerated receptor populations based on the mean individual risk in each sector and sector-specific population estimates. The resulting incidence estimates were weighted using facility-specific sampling weights and summed.

Our analysis of cancer risks in the local population indicates that, as a result of today's rule, annual excess

[347] Excess incidence refers to the incidence of disease beyond that which would otherwise be observed in the population, absent exposures to the sources in question. Avoided incidence is the reduction in incidence of disease in the population that would be expected from a reduction in exposures to the sources in question.

cancer incidence will be reduced from 0.1 cases per year (90 percent confidence interval, 0.08 to 0.2) to 0.02 cases per year (90 percent confidence interval, 0.01 to 0.03). Nearly all of the risk reduction, which occurs almost entirely among non-farm residents, is attributable to incinerators and results mainly from reductions in emissions of metals, primarily arsenic, cadmium, and chromium.

3. Risks From Lead Emissions

Children that live near hazardous waste combustor are exposed to lead emissions through the diet and through inhalation and incidental soil ingestion. Children that already have elevated blood lead levels may have their levels further increased as a result of such exposures, some of whom may have their blood lead levels increased beyond 10 µg/dL. We estimated the increase, or excess incidence, of elevated blood levels above 10 µg/dL by estimating the number of children in each sector with blood lead levels above 10 µg/dL as a result of background exposure and subtracting that from the number of children above 10 µg/dL as a result of both background exposure and incremental exposures from hazardous waste combustors. This estimate represents the annual rate of increase in the number of children with elevated blood lead beyond background.

Our analysis indicates that, as a result of today's rule, the excess incidence of elevated blood lead will be reduced from 7 cases per year to less than 0.1 cases per year. The reduction is primarily attributable to incinerators, although a small reduction (0.4 cases per year) is attributable to cement kilns. These reductions occur entirely among non-farm residents. Children of minority and low income households generally have higher background exposures to lead and are more likely to have blood levels elevated above 10 µg/dL than children from other demographic groups and, therefore, are more likely to benefit from reductions in lead exposures. However, our analysis did not consider the influence of such socioeconomic factors. For this reason, we believe that we may have underestimated the reductions in excess incidence of elevated blood lead levels, including potential reductions attributable to cement kilns and lightweight aggregate kilns.

4. Risks From Emissions of Particulate Matter

Human epidemiological studies have demonstrated a correlation between community morbidity and mortality and ambient levels of particulate matter, particularly fine particulate matter (below 2.5 or 10 microns in diameter, depending on the study), across a wide variety of geographic settings. Lower particulate matter is associated with lower mortality, lower rates of hospital admissions, and a lower incidence of respiratory disease. Concentration-response functions for various health endpoints have been derived from these studies, and we used these functions to estimate the reduction in the incidence of mortality and morbidity associated with a reduction in emissions of particulate matter.

Our analysis indicates that, as a result of today's rule, there will be between 1 and 4 fewer premature mortalities per year associated with particulate matter emissions (depending on which study is used). In addition, we project there will be 6 fewer hospitalizations, 25 fewer cases of chronic bronchitis, 180 fewer cases of lower respiratory disease, per year.

The mortality estimates are subject to some uncertainty due to the fact that the lower estimate (which is derived from long-term studies) assumes no threshold for effects and the upper estimate (which is derived from short-term studies) may include mortalities that are premature by as little as a few days. The no threshold assumption may be appropriate, however, considering that the reduction in mortality is projected to occur entirely from incinerators, especially on-site incinerators. Such incinerators are located at manufacturing facilities that are likely to have other particulate matter emissions and both on-site, and commercial incinerators are typically located in industrial areas where there may be many other sources of particulate matter emissions, resulting in ambient particulate matter levels that are well above any threshold. Also, because the particulate matter modeling was conducted to 20 rather than 50 kilometers, the inhalation risks may be understated, especially from PM that is 2.5 microns in diameter and smaller which can be transported over long distances from HWCs.

III. What Is the Potential for Adverse Ecological Effects?

The ecological assessment is based on a screening level analysis in which model-estimated media concentrations are compared to media-specific ecotoxicological criteria that are protective of multiple ecological receptors. The analysis used an ecological hazard quotient as the metric for assessing ecological risk. The ecological hazard quotient is the ratio of the model-estimated media concentration to the ecotoxicological criterion. Hazard quotients above 1 suggest that a potential for adverse ecological effects may exist. Ecotoxicological criteria for soils, surface waters, and sediments were used in the analysis. Ecotoxicological criteria for soil are intended to be broadly protective of terrestrial ecosystems, including the soil community, terrestrial plants, and consumers such as mammals and birds. Ecotoxicological criteria for surface water are intended to be protective of the aquatic community, including fish and aquatic invertebrates, primary producers such as algae and aquatic plants, and fish-eating mammals and birds. Sediment criteria are intended to be protective of the benthic community. The analysis was conducted for dioxins, mercury, and fourteen other metals. Only the results for dioxins and mercury are discussed here. Very low or no potential for ecological risk was found for the other metals.[348] For a full discussion of the ecological assessment, see the background document for today's rule.[349]

A. Dioxins

A variation on the general screening level approach was used for assessing ecological risks from dioxins in surface water. Rather than basing the assessment on ambient water quality criteria for the protection of wildlife, ecotoxicological benchmarks for 2,3,7,8-tetrachlorodibenzo(p)dioxin (TCDD) for fish-eating birds and mammals (i.e., no observed adverse effects levels) were used to make a direct comparison with estimated intakes of dioxins in fish in terms of 2,3,7,8–TCDD toxicity equivalents (TEQ). This approach accounts for the different rates of bioaccumulation of the various 2,3,7,8 dibenzo(p)dioxin and dibenzofuran congeners and avoids the conservatism of comparing an ambient water quality criterion for 2,3,7,8–TCDD to model-estimated water concentrations in terms of 2,3,7,8–TCDD TEQs. The results of our analysis indicate no exceedances of the ecotoxicological benchmarks for 2,3,7,8–TCDD for any category of hazardous waste combustors. One limitation of the ecological assessment for dioxins is that water quality criteria for the protection of aquatic life are not

[348] Although minor exceedances of the ecotoxicological criteria for lead were noted for incinerators, the exceedances were eliminated under today's rule.

[349] "Human Health and Ecological Risk Assessment Support to the Development of Technical Standards for Emissions from Combustion Units Burning Hazardous Wastes: Background Document—Final Report," July, 1999.

available. However, fish and aquatic invertebrates are generally less sensitive to dioxins than mammals and birds.

For assessing the potential for ecological risk in terrestrial ecosystems, soil criteria developed for 2,3,7,8–TCDD for the protection of mammals and birds were compared to model-estimated soil concentrations in terms of 2,3,7,8–TCDD TEQs. Because the more highly chlorinated 2,3,7,8 dibenzo(p)dioxin and dibenzofuran congeners are expected to bioaccumulate in prey species more slowly than 2,3,7,8–TCDD, the potential for ecological risk is likely to be overstated. Our analysis indicates that, at baseline, less than one percent of the study areas surrounding hazardous waste combustors have the potential for ecological risk from dioxins in soil. Under today's rule, we project no exceedances of the ecotoxicological criteria for dioxins in soil. The soil ecotoxicological criterion for dioxins is derived from studies of reproductive and developmental effects in mammals. Potential impacts to terrestrial plant and soil communities could not be evaluated due to a lack of sufficient ecological toxicity data. However, vertebrates such as mammals and birds are known to be more sensitive to dioxin exposure than invertebrates. Therefore, we consider the potential for risk to invertebrate receptors to be low.

B. Mercury

The ecological assessment of mercury is based on water quality criteria for the protection of wildlife that were developed for the Mercury Study Report to Congress. The assessment used the lowest of the available water quality criteria for individual fish-eating avian and mammalian wildlife species. The frequency distribution of ecological hazard quotients for total mercury indicates the potential for adverse ecological effects for cement kilns. Our analysis indicates that, for cement kilns, exceedances of the ecotoxicological criteria for total mercury may occur over 40 percent of study area surface waters at baseline. Above a hazard quotient of 1, the frequency of exceedances drops off quickly, with hazard quotients above 2 occurring at a frequency of 1 percent. The ecological hazard quotients remain essentially unchanged under today's rule. However, we project no exceedances of the ecotoxicological criteria for methyl mercury. Because methyl mercury is the form of mercury that is of greatest concern for fish-eating mammals and birds, the lack of exceedances suggests that the potential for ecological effects is relatively low. Our analysis also suggests relatively low potential for ecological effects for incinerators and lightweight aggregate kilns. Although our analysis indicates that exceedances of the ecotoxicological criteria for total mercury may occur over 22 percent of study area surface waters for lightweight aggregate kilns and 6 percent for incinerators at baseline, these are reduced to no exceedances and less than 1 percent, respectively, under today's rule. Moreover, we project no exceedances of the ecotoxicological criteria for methyl mercury. The significance of these results must be judged in the context of the considerable uncertainties related to the fate and transport of mercury in the environment, as discussed elsewhere in today's notice, the presence of background levels of mercury, and the level of protection afforded by the underlying ecotoxicological criteria.

For soils, our analysis indicates that less than one percent of the study areas surrounding hazardous waste combustors have the potential for ecological risk at baseline. Under today's rule, we project no exceedances of the ecotoxicological criteria for mercury for incinerators and lightweight aggregate kilns. For cement kilns, we project exceedances at a frequency of much less than one percent. The soil ecotoxicological criterion for mercury is derived from studies of the reproductive capacity of earthworms. Although earthworms serve a vital function in the soil community, given the redundancy and abundance of soil organisms and the low frequency of exceedances, we believe that adverse impacts to the terrestrial ecosystem, including higher trophic levels such as terrestrial mammals, are unlikely.

As a screening level analysis, the ecological assessment is subject to a number of limitations. The analysis assumes the occurrence of the ecological receptors on which the ecotoxicological criteria are based in all modeled sectors and water bodies. Although the ecological receptors included in the analysis are commonly occurring species, they may not be present in the same locations at which exceedances are predicted due to a lack of suitable habitat or other factors. Furthermore, the range of predator and prey species may exceed the spatial extent of the estimated exceedances. Many primary and secondary consumers are opportunistic feeders with substantial variability in both the type of food items consumed as well as the seasonal patterns of feeding and foraging. These behaviors can be expected to moderate exposures to chemical contaminants and reduce the potential for risk. On the other hand, gaps exist in the ecotoxicological data base such that not all combinations of chemical constituents and ecological receptors could be evaluated. In addition, media concentrations could not be estimated for all habitats that may be important to ecological receptors, such as wetlands. Also, our analysis did not consider the possible impact of background concentrations. Therefore, although as a screening level analysis the ecological assessment has a tendency toward conservatism, we cannot say for certain that no potential exists for ecological risks that fall beyond the scope of the assessment.

Part Eight: Analytical and Regulatory Requirements

I. Executive Order 12866: Regulatory Planning and Review (58 FR 51735)

Is This a Significant Regulatory Action?

Under Executive Order 12866 (58 FR 51735, October 4, 1993), we must determine whether a regulatory action is "significant" and, therefore, subject to OMB review and the requirements of the Executive Order. The Order defines "significant regulatory action" as one that is likely to result in a rule that may:

(1) Have an annual effect on the economy of $100 million or more, adversely affect in a material way the economy, a sector of the economy, productivity, competition, jobs, the environment, public health or safety, or state, local, or tribal governments or communities;

(2) Create a serious inconsistency or otherwise interfere with an action taken or planned by another agency;

(3) Materially alter the budgetary impact of entitlement, grants, user fees, or loan programs or the rights and obligations of recipients thereof; or

(4) Raise novel legal or policy issues arising out of legal mandates, the President's priorities, or the principles set forth in this Executive Order.

Under the terms of Executive Order 12866, we have reviewed today's rule and determined that it does not represent an "economically significant" regulatory action, as defined under point one above. The aggregate annualized social costs for this rule are under $100 million (ranging from $50 to $63 million for the final standards). However, it has been determined that this rule is a "significant regulatory action" because it may raise novel legal or policy issues (point four above). As such, this action was submitted to OMB for review. Changes made in response to OMB suggestions or recommendations will be documented in the public record.

We have prepared economic support materials for today's final action. These documents are entitled: Assessment of the Potential Costs, Benefits, and Other Impacts of the Hazardous Waste Combustion MACT Standards—Final Rule, and, Addendum To The Assessment of the Potential Costs, Benefits, and Other Impacts of the Hazardous Waste Combustion MACT Standards—Final Rule. The Addendum and Assessment documents were designed to adhere to analytical requirements established under the Executive Order, and corresponding Agency and OMB guidance; subject to data, analytical, and resource limitations.

This part of the Preamble is organized as follows: I. Executive Order 12866 (as addressed above), II. What Activities have Led to Today's Rule?—presenting a summary of the analytical methodology and findings from the 1996 RIA for the proposed action, and, a summary of substantive peer review and public stakeholder comments on this document, with Agency responses, III. Why is Today's Rule Needed?—justifying the need for Federal intervention, IV. What Were The Regulatory Options?—presenting a brief discussion of the scope of alternative regulatory options examined, V. What Are the Potential Costs and Benefits of Today's Rule?—summarizing methodology and findings from the final Assessment document, VI. What Considerations Were Given to Issues Like Equity and Children's Health?, VII. Is Today's Rule Cost-Effective?, VIII. How Do the Costs of Today's Rule Compare to the Benefits?, IX. What Consideration Was Given to Small Businesses? X. Were Derived Air Quality and Non-Air Impacts Considered? XI. Is Today's Rule Subject to Congressional Review?, XII. How is the Paperwork Reduction Act Considered in Today's Rule?, XIII. Was the National Technology Transfer and Advancement Act Considered?, and, XIV. Were Tribal Government Issues Considered? (Executive Order 13084).

The RCRA docket established for today's final rulemaking maintains a copy of the complete final Assessment and Addendum documents for public review. Readers interested in these economic support materials are strongly encouraged to read both documents to ensure full understanding of the methodology, data, findings, and limitations of the analysis.

II. What Activities Have Led to Today's Rule?

In May of 1993, we introduced a draft Waste Minimization and Combustion Strategy designed to reduce reliance on the combustion of hazardous waste and encourage reduced generation of these wastes. Among the key objectives of the strategy was the reduction of health and ecological risks posed by the combustion of hazardous wastes. As part of this strategy, we initiated the development of MACT emissions standards for hazardous waste combustion facilities.

On April 19, 1996, we published the proposal, which included revisions to standards for hazardous waste incinerators and hazardous waste burning cement kilns and lightweight aggregate kilns. These proposed MACT standards were designed to address a variety of hazardous air pollutants, including dioxins/furans, mercury, semivolatile and low volatile metals, and chlorine. We also proposed to use emissions of carbon monoxide and hydrocarbons as surrogates for products of incomplete combustion.

A. What Analyses Were Completed for the Proposal?

We completed an economic analysis in support of the proposal. This Regulatory Impact Assessment (RIA), examined and compared the costs and benefits of the proposed standards, as required under Executive Order 12866. Industry economic impacts, environmental justice, waste minimization incentives, and other impacts were also examined. This RIA also fulfilled the requirements of the Regulatory Flexibility Act by evaluating the effects of regulations on small entities. This document, Regulatory Impact Assessment for Proposed Hazardous Waste Combustion MACT Standards (November 13, 1995), Appendices (November 13, 1995), and two Addenda (November 13, 1995 and February 12, 1996) are available in the docket established for the proposed action.

Throughout the development of the proposal, we considered many alternative regulatory options. A full discussion of the methodology and findings of all options considered is in the Regulatory Impact Assessment (RIA). Only the floor option and our preferred option (*i.e.*, the floor option and beyond-the-floor options for selected hazardous air pollutants) are discussed in this summary.

1. Costs

To develop industry compliance cost estimates, we categorized or modeled combustion units based on source category and size and estimated engineering costs for the air pollution control devices needed to achieve the proposed standards. Based on current emissions and air pollution control device information, we developed assumptions regarding the type of upgrades that units would require. This "model plants" engineering cost analysis was used because our data were limited.

Total annual compliance cost estimates for the floor option and the beyond-the-floor standards ranged from $93 million to $136 million, respectively, beyond the baseline. For the floor option, on-site incinerators represented 55 percent of total nationwide costs, cement kilns represented 29 percent, commercial incinerators represented 14 percent, and lightweight aggregate kilns represented 2 percent. Of the total beyond-the-floor costs, on-site incinerators represented 50 percent, cement kilns represented 32 percent, commercial incinerators represented 15 percent, and lightweight aggregate kilns represented 3 percent. For the incremental impacts of going from the floor to beyond-the-floor, lightweight aggregate kilns were projected to experience a 100 percent increase in compliance costs, cement kilns would experience a 63 percent increase, commercial incinerators and on-site incinerators, at 54 and 34 percent, respectively. Overall, compliance costs associated with the proposed action were projected to result in significant economic impacts to the combustion industry.

The RIA also examined average total annual compliance costs per combustion unit. This indicator was designed to assess the relative impact of the rule on each facility type in the combustion universe. Findings projected that cement kilns were likely to incur the greatest average incremental cost per unit, totaling $770,000 annually at the floor and $1.1 million annually for the proposed beyond-the-floor standards. The costs for LWAKs ranged from $490,000 to $825,000. The costs for on-site incinerators ranged from $340,000 to $486,000. The costs for commercial incinerators ranged from $493,000 to $730,000. These costs assume no market exits. Once market exit occurs, average per unit costs may be significantly lower, particularly for on-site incinerators.

The analysis also examined the floor and proposed beyond-the-floor impacts on a per ton basis. In the baseline, average prices charged to burn hazardous waste were estimated to be $178 per ton for cement kilns, $188 per ton for lightweight aggregate kilns, $646 per ton for commercial incinerators, and $580 per ton for on-site incinerators (approximate internal transfer price).

Baseline burn costs (before consolidation) for these facilities were found to average $104 per ton for cement kilns, $194 per ton for lightweight aggregate kilns, $806 per ton for commercial incinerators, and $28,460 per ton for on-site incinerators.[350] Incremental compliance costs at the floor and proposed BTF levels were estimated to be $23 to $31 per ton for commercial incinerators, $40 to $50 per ton for cement kilns, $39 to $56 per ton for lightweight aggregate kilns, and $47 to $57 per ton for on-site incinerators.

From comparison of these prices and baseline burn costs, some high-cost facilities, especially commercial and on-site incinerators, appeared to be burning below break-even levels. The incremental compliance costs of the proposal would make these facilities even less competitive. The RIA estimated that, of the facilities which are currently burning hazardous waste, three cement kilns, two lightweight aggregate kilns, six commercial incinerators, and eighty-two on-site incinerators would likely stop burning hazardous waste over the long term. These were incremental to projected baseline market exits estimated at the time of proposal. Most of the facilities that exit the market were ones that burned smaller amounts of hazardous waste.

We also conducted a generalized cost effectiveness analysis for the proposal. We found that the cost per hazardous air pollutant is often difficult to estimate because the air pollution control devices often control more than one pollutant. Therefore, it was not feasible to estimate precise costs per pollutant. Once the compliance expenditures had been estimated, the total mass emission reduction achieved when facilities comply with the standards option was estimated. The total incremental cost per incremental reduction in pollutant emissions was then estimated. Considering all facilities together, dioxin, mercury, and metals costs per unit reduction are quite high because small amounts of the dioxin and metals are released into the environment. For other pollutants, expenditures per ton are much lower. Please refer to the November 13, 1995 draft RIA for a complete discussion of the methodology and findings.

2. Benefits

Our evaluation showed that background levels of dioxin in beef, milk, pork, chicken, and eggs were approximately 0.50, 0.07, 0.30, 0.20, and 0.10 parts per trillion fresh weight, respectively, on a toxicity equivalent (TEQ) basis. These background levels and information on food consumption were then used to estimate dietary intake in the general population. That estimate was 120 picograms TEQ per day. We also collected background data on dioxins in fish, taken from 388 locations nationwide. At 89 percent of the locations, fish contained detectable levels of at least two of the dioxin and furan compounds for which analyses were conducted. We then estimated total dioxin emissions from hazardous waste combustors at 0.94 kg TEQ per year. This represented about 9 percent of total anthropogenic emissions of dioxins in the U.S. at the time. The dioxin estimates have been revised since then.

While no one-to-one relationship between emissions and risk exists, it was inferred that hazardous waste-burning sources were likely to contribute significantly to dioxin levels in foods. In the proposal, we estimated that these dioxin emissions would be reduced to 0.07 kg TEQ per year at the floor levels and to 0.01 kg TEQ per year at the beyond the floor levels. We estimated this to result in decreases of approximately 8 and 9 percent in total estimated anthropogenic U.S. emissions, respectively. Our position at proposal was that reductions in these emissions, in conjunction with reductions from other dioxin-emitting sources, would help reduce dioxin levels in foods over time and, therefore, reduce the likelihood of adverse health effects, including cancer.

Mercury is a concern in both occupational and environmental settings. Human exposures to methyl mercury occur primarily from ingestion of fish. Mercury contamination results in routine fish consumption bans or advisories in over two thirds of the States. At the proposal, we estimated a safe exposure level to methyl mercury (the reference dose) at 0.0001 mg per kg per day. We collected data on chemical residues in fish from 388 locations nationwide and found that fish contained detectable levels of mercury at 92 percent of the locations. Similar results have been obtained in other studies, strongly suggesting that long-range atmospheric transport and deposition of anthropogenic emissions is occurring. Our research found that, for persons who eat significant amounts of freshwater fish, exposures to mercury may be significant compared to the threshold at which effects may occur in susceptible individuals.

Our estimates for the proposal indicated that hazardous waste combustors emitted a total of 10.1 Mg of mercury per year, representing about 4 percent of the U.S. anthropogenic total. Implementation of the floor levels were estimated to reduce mercury emissions from all hazardous waste-burning sources to 3.3 Mg per year. The proposed beyond-the-floor levels would drop this to an estimated 2.0 Mg per year. Such reductions were estimated to lower total anthropogenic U.S. emissions by approximately 3 percent. Reductions in these mercury emissions, in conjunction with the Agency's efforts to reduce emissions from other mercury-emitting sources, would help diminish mercury levels in fish over time and, therefore, reduce the likelihood of adverse health effects occurring in fish-consuming populations.

Other benefits we investigated for the proposal included ecological benefits, property value benefits, soiling and material damage, aesthetic damages, and recreational and commercial fishing impacts. Overall, the analysis of the ecological risk suggested that water quality criteria may be exceeded only in small watersheds located near waste combustion facilities. Furthermore, such exceedances would occur only when assuming very high emissions. The preliminary analysis for the proposal indicated that property value impacts may be very significant because of emission reductions from hazardous waste combustion facilities. A detailed review of this analysis, as well as other benefits (*e.g.*, avoided clean-up as result of reduced particulate matter releases), is presented in chapter 5 of the November 13, 1995 Regulatory Impact Assessment.

3. Other Regulatory Issues

We also examined other issues associated with the proposal. These included environmental justice, unfunded federal mandates, regulatory takings, and waste minimization.

a. Environmental Justice. We completed an analysis of demographic characteristics of populations near cement plants and commercial hazardous waste incinerators and compared them to county and state populations. This analysis focused on spatial relationships between these

[350] Baseline costs were calculated by identifying all costs of hazardous waste burning. For commercial incinerators and on-site incinerators, all costs of construction, operation and maintenance are included. This also includes RCRA permits and existing air pollution control devices. The costs for on-site burners are extremely high because the costs are distributed across the small amount of hazardous waste burned. For cement kilns and lightweight aggregate kilns, only the incremental costs of with burning hazardous waste are included (e.g., permits). The cost of the actual units (which are primarily for producing cement or aggregate) are not included in the baseline.

facilities and the adjacent minority and low income populations. The study did not describe the actual health status of these populations nor how their health might be affected in proximity to hazardous waste facilities. Results indicated that 27 percent of all cement plants and 37 percent of the sample of incinerators had minority percentages within a one mile radius which exceed the corresponding county minority percentages by more than five percentage points. Eighteen percent of all cement plants and 36 percent of the sample of incinerators had poverty percentages which exceed the county poverty percentages by more than five percentage points. Please see chapter seven of the November 13, 1995 RIA for a full discussion of the environmental justice methodology and findings conducted for the proposal.

b. Unfunded Federal Mandates. Our analysis of compliance with the Unfunded Mandates Reform Act (UMRA) of 1995 found that the proposal contained no State, local, tribal government, or private sector Federal mandates as defined under the regulatory provisions of Title II of UMRA. We concluded that the rule implements requirements specifically set forth by Congress, as stated in the CAA and RCRA. The proposed standards were not projected to result in mandated annualized costs of $100 million or more to any state, local, or tribal government. Furthermore, the proposed standards would not significantly or uniquely affect small governments.

c. Regulatory Takings. We found no indication that the proposed MACT standards would be considered a taking, as defined by legislation being considered by Congress at the time. Property would not be physically invaded or taken for public use without the consent of the owner. Also, the proposed standards would not deprive property owners of economically beneficial or productive use of their property or reduce the property's value.

d. Incentives for Waste Minimization and Pollution Prevention. We briefly examined the potential for waste minimization in the proposal. Preliminary results suggested that generators have a number of options for reducing or eliminating waste. To evaluate whether facilities would adopt applicable waste minimization measures, a simplified pay back analysis was used. Using information on per-facility capital costs for each technology, we estimated the time period required for the cost of the waste minimization measure to be returned in reduced combustion expenditures. Our assessment of waste minimization found that approximately 630,000 tons of waste may be amenable to waste minimization. For a complete description of the analysis please see the November 13, 1995 Regulatory Impact Assessment.

4. Small Entity Impacts

The Regulatory Flexibility Act (RFA) of 1980 requires Federal agencies to consider impacts on small entities throughout the regulatory process. Section 603 of the RFA calls for an initial screening analysis to determine whether small entities will be adversely affected by the regulation. If affected small entities are identified, regulatory alternatives must be considered to mitigate the potential impacts. Small entities, as described by the Act, are only those "businesses, organizations, and governmental jurisdictions subject to regulation." We used information from Dunn & Bradstreet, the American Business Directory, and other sources to identify small businesses. Based on the number of employees and annual sales information, we identified eleven firms which might be considered directly affected small entities. We found that directly affected small entities were unlikely to be significantly affected and that over one-third of those that were considered small, while having a relatively small number of employees, had annual sales in excess of $50 million per year. Also, small entities impacted by the proposal were found to be those that burn very little waste and hence face very high cost per ton burned. These facilities were expected to discontinue burning hazardous waste rather than complying with the proposal. These costs of discontinuing waste burning would not be so high as to be a significant impact. Thus, we found that the proposal may, at most, have a minor impact on a limited number of affected small businesses.

B. What Major Comments Were Received on the Proposal RIA?

The November 13, 1995 Regulatory Impact Assessment (RIA) received comment from many concerned stakeholders. We also conducted a formal peer review of the RIA. We appreciate all comments received and incorporated many of the suggestions into the final Assessment document to improve the analysis. A summary of the key issues presented by stakeholders and the peer reviewers is presented below, along with our responses. You are requested to review the complete documents: Comment Response Document—Addressing The Public Comments Received On: Regulatory Impact Assessment for Proposed Hazardous Waste Combustion MACT Standards, Draft, November 13, 1995, and, Peer Review Response Document—Addressing The Peer Review Received On: Regulatory Impact Assessment for Proposed Hazardous Waste Combustion MACT Standards, Draft, November 13, 1995. These documents, available in the RCRA docket established for today's action, present complete responses to all substantive comments received on the 1995 RIA.

1. Public Comments

We received several general comments on the accuracy of the baseline and compliance costs applied in the RIA. Several commenters suggested that we revise baseline and compliance costs to improve their accuracy, which we did. Instead of using a model plant approach for assigning compliance and baseline costs to modeled combustion facilities, costs for today's rule have been estimated using combustion system-specific parameters including gas flow rate, baseline emissions, air pollution control devices currently in place, total chlorine in feed, stack moisture, and temperature at the inlet to the air pollution control device. These system-specific baseline and compliance costs allow for greater accuracy in estimating national costs and predicting which facilities are likely to stop burning hazardous waste. Also, the baseline costs include clinker production penalties at cement kilns and use updated incinerator capital costs, labor requirements, and ash disposal costs.

Various commenters were concerned that the consolidation routine in the economic modeling was unrealistic. For the final economic assessment, we revised the consolidation routine to incorporate capacity constraints that affect the ability of combustion facilities to consolidate wastes into fewer systems at a given facility. Maximum capacity rates (tons per year) were derived by using the feed rates in OSW's database (pounds per year) and assuming 8,000 hours per year of operation. Wastes are assumed to be consolidated into fewer combustion systems at a single facility to the extent that the capacity constraints allow the systems to absorb the displaced hazardous wastes.

Many commenters felt that the waste minimization analysis of the 1995 RIA was unrealistic and overestimated gains. They suggested that the waste minimization analysis be improved to reflect other constraints faced by waste generators. For the 1999 Assessment, we conducted an expanded and significantly improved analysis of waste

minimization alternatives, using a more detailed decision framework for evaluating waste minimization investment decisions. This framework attempts to capture the full inventory of costs, savings, and revenues, including indirect, less tangible items typically omitted from waste minimization analysis, such as liability and corporate image. For each alternative that was identified as viable for currently combusted waste streams, cost curves were developed for a range of waste quantities, as cost varies by waste quantity. These cost curves were then used to determine whether a waste generator would shift from combustion to waste minimization alternatives as combustion prices rise.

Some commenters suggested that we model waste markets to reflect segmentation across waste types, instead of simply applying different prices for kilns and incinerators. In response, we have developed a revised pricing approach that covers seven categories of waste types and prices. The economic model used for the 1999 Assessment incorporates these seven different waste types and prices. Waste management prices depend on several factors: Waste form (solid/liquid/sludge), heat content, method of delivery (*e.g.*, bulk versus drum), and contamination level (*e.g.*, metals or chlorine content). In addition, regulatory constraints (*e.g.*, prohibitions against burning certain types of wastes) and technical constraints (*e.g.*, adverse effects of certain waste streams on cement product quality) also influence combustion prices. Although data limitations prevent the inclusion of all factors, the information on heat content and constituent concentrations from EPA's National Hazardous Waste Constituent Survey (NHWCS) allowed us to enhance the characterization of combusted waste.

A few commenters indicated that the baseline costs of waste burning for cement kilns should include the shared joint costs of cement production. We do not include cement production costs in the costs of waste burning because they are not part of the incremental costs introduced by hazardous waste burning at kilns. We believe this assumption is appropriate, given that cement production is the principal activity of cement kilns that burn hazardous waste. Furthermore, that same kiln would be required in the production of cement regardless of hazardous waste combustion activities. We did, however, evaluate whether some of the more economical marginal kilns may be covering cement production costs with hazardous waste burning revenues. These findings are reported in the 1999 Assessment document.

Some were concerned that shutdown costs and environmental risks associated with combustion facility closures were not accounted for in the 1995 economic analysis. We found that many of the facilities that are expected to close are those that are were operating significantly below capacity in the baseline. This suggests that such facilities may not have been fully recovering their capital costs and are likely to close, even in the absence of the MACT standards. Therefore, while closure is not costless, closure costs attributable directly to the MACT standards are likely to be relatively small. With regard to increased risks from transportation of hazardous wastes, the incremental health risks will be minimal since these facilities are burning small quantities of waste. In fact, we estimate that less than 1.5 percent of the wastes currently burned at combustion facilities will be reallocated due to facility closure. Moreover, spills and other accidents caused by trucking hazardous waste (the most common means of shipment for hazardous materials) generally are considered low-probability events, especially relative to the total number of accidents occurring within transportation overall.

Some commenters felt that potential impacts on generators and fuel blenders were not adequately addressed. In the 1995 RIA, we considered these costs and determined that hazardous waste generators and fuel blenders would likely see price increases for combusted waste streams, though the magnitude of the price increase will depend on the type of waste and the non-combustion waste management alternatives available for that waste type. The price increase faced by generators was estimated at 10 percent of market prices.

The major hazardous waste burning sectors frequently presented alternative views regarding various key waste burning issues. These included: Facility market exits, revenues, impacts resulting from waste feedrate modifications, impacts from alternative fuel usage, price impacts, and available practical capacity. We have reviewed and evaluated the substantiative information submitted by all concerned stakeholders and believe our final Assessment and Addendum documents reflect a fair and balanced representation of baseline conditions and post-rule incremental economic impacts.

2. Peer Review

The peer reviewers suggested that we clarify the aims, objectives, and organizing principles for the 1995 RIA. They stated that, while the 1995 RIA generally meets the requirements set forth by OMB's Guidance regarding the economic analysis of federal regulations under Executive Order 12866, the RIA would be substantially improved if it fully conformed with OMB's Guidance, especially with regard to organization and statement of objectives. For the 1999 Assessment, we have tried to restructure the document to be more in line with OMB's 1996 Guidance for conducting Economic Analysis of Federal Regulations Under Executive Order 12866. The 1999 Assessment includes the following elements in the first chapter to address concerns of the reviewers: the objectives of the Economic Assessment, the analytical requirements the document fulfills, the rationale for regulatory action, an examination of alternative regulatory options, the anticipated effect of the MACT standards, and the analytic approach and organization for the subsequent chapters.

The peer reviewers also suggested that the compliance costs need to be clearly distinguished from social costs, as defined by the theory of applied welfare economics. For the 1999 Assessment, we have been careful to clarify the difference between compliance costs and social costs and explain how the rule will likely affect producers and consumers. The final Assessment explicitly lays out the economic framework for the social cost analysis and distinguishes these from compliance cost estimates. The hazardous waste combustion market is diverse, dynamic, and segmented. Because data are not adequate to support a full econometric analysis at this level of complexity, we have applied a simplified approach that brackets the welfare loss attributable to today's rule. This approach bounds potential economic welfare losses by considering two scenarios: (1) Compliance costs assuming no market adjustments (the upper bound) and (2) market adjusted compliance costs (the lower bound).

The peer reviewers also suggested that the benefits analysis was not fully responsive to the requirements of Executive Order 12866. For the 1999 Assessment, we have applied results from an extensive multi-pathway risk assessment to develop human health and ecological benefit estimates. For the human health analysis, benefits are estimated from cancer and noncancer

risk reductions. Cancer risk reduction estimates are monetized by applying the value of a statistical life (VSL) to the risk reduction expected to result from the MACT standards. Monetary values are assigned to noncancer benefits using a direct-cost approach which focuses on the expenditures averted by decreasing the occurrence of an illness or other health effect. Ecological benefits are also included in the 1999 Assessment.

The peer reviewers suggested that easily burned waste streams would command lower prices and that this should be reflected in the economic modeling. They also indicated that certain combustion sectors may only handle these easy-to-burn waste types and that this should be reflected in baseline costs for these combustors. The pricing approach used in the 1999 Assessment assigns different prices to different types of wastes. Waste management prices depend on several factors, which include: waste form (solid/liquid/sludge), heat content, method of delivery (*e.g.*, bulk versus drum), and contamination level (*e.g.*, metals or chlorine content). In addition, regulatory constraints (*e.g.*, prohibitions against burning certain types of wastes) and technical constraints (*e.g.*, adverse effects of certain waste streams on cement product quality) also influence combustion prices. Although data limitations prevent us from accounting for all factors, the information on heat content and constituent concentrations from EPA's National Hazardous Waste Constituent Survey (NHWCS) allowed us to enhance the characterization of combusted waste. In addition to pricing refinements, the 1999 Assessment adjusts baseline costs to reflect differences in the performance and capabilities across combustion systems.

The peer reviewers were also concerned that the 1995 RIA applied outdated data in the analysis. The most recent available data were used in the 1995 RIA. The 1999 Assessment, once again, applies the most recently available, and verified data.

The peer reviewers suggested that fully-loaded cost-per-ton estimates should be provided for each waste minimization alternative so that these could be compared with combustion prices. For the 1999 Assessment, we conducted an expanded and significantly improved analysis of waste minimization alternatives. This analysis used a more detailed decision framework for evaluating waste minimization investment decisions that captures the full inventory of costs, savings, and revenues, including indirect, less tangible items typically omitted from waste minimization analysis, such as liability and corporate image. For each viable waste minimization alternative for currently combusted waste streams, cost curves were developed for a range of waste quantities because cost varies by waste quantity. These cost curves were then used to determine whether a waste generator would shift from combustion to waste minimization alternatives as combustion prices rise.

III. Why Is Today's Rule Needed?

Today's rule will reduce the level of several hazardous air pollutants, including dioxins and furans, mercury, semi-volatile and low volatile metals, and chlorine gas. Carbon monoxide, hydrocarbons, and particulate matter will also be reduced. Most hazardous waste combustion facilities are currently operating with some air pollution control devices in place. However, existing pollutants from these facilities are still emitted at levels found to result in risks to human health and the environment. Human exposure to these combustion air toxics occurs both directly and indirectly and leads to cancer, respiratory diseases, and possibly developmental abnormalities. A preliminary screening analysis suggests that ecosystems are also at risk from these air pollutants.

The hazardous waste combustion industry operates in a dynamic market. Several combustion facilities and systems have closed or consolidated over the past several years and this trend is likely to continue. These closures and consolidations may lead to reduced air pollution, in the aggregate, from hazardous waste facilities. However, the ongoing demand for hazardous waste combustion services will ultimately result in a steady equilibrium as the market adjusts over the long-term. We therefore expect that air pollution problems from these facilities, and the corresponding threats to human health and ecological receptors, will continue if today's rule were not implemented.

The market has generally failed to correct the air pollution problems resulting from the combustion of hazardous wastes. This has occurred for several reasons. First, there exists no natural market incentive for hazardous waste combustion facilities to incur additional costs implementing control measures because the individuals and entities who bear the negative human health and ecological impacts associated with these actions have no direct control over waste burning decisions. This may be referred to as an environmental externality, where the private industry costs of combustion do not fully reflect the human health and environmental costs of hazardous waste combustion. Second, the parties injured by the combusted pollutants are not likely to have the resources or technological expertise to seek compensation from the damaging entity (combustion facility) through legal or other means. Finally, emissions from hazardous waste combustion facilities directly affect a "public good," the air. Improved air quality benefits human health and the environment. These benefits cannot be limited to just those who pay for reduced pollution. The absence of government intervention, therefore, will result in a free market that does not provide the socially optimal quantity and quality of public goods, such as air.

We recognize the need for federal regulation as the optimal means of correcting market failures leading to the negative environmental externalities resulting from the combustion of hazardous waste. The complex nature of the pollutants, waste feeds, waste generators, and the diverse nature of the combustion market would limit the effectiveness of a non-regulatory approach such as taxes, fees, or an educational-outreach program. Furthermore, requirements for MACT standards under the Clean Air Act, as mandated by Congress, has compelled us to select today's regulatory approach.

IV. What Were the Regulatory Options?

We carefully assembled and evaluated all data and relevant information acquired since the proposal. We considered several alternative MACT options since the proposal, ultimately leading to today's rule. Please refer to Part Four of this preamble for more detail on option development and the specific approach and methodology used in developing the final standards. This section of today's preamble briefly discusses and assesses the final regulatory levels and two primary options. The final regulatory levels, as discussed in Part Four, establish a combination of floor and beyond-the-floor standards for the pollutants of concern. Of the options analyzed, one addresses a floor only scenario and the other examines beyond-the-floor levels for dioxins/furans and mercury, based on activated carbon injection (ACI). The reader may wish to examine the Assessment document for a complete discussion of the analytical methodology, costs, benefits, and other projected impacts of today's rule and options. This Assessment document is available in the RCRA docket for today's rule.

V. What Are the Potential Costs and Benefits of Today's Rule?

A. Introduction

The value of any regulatory policy is traditionally measured by the net change in social welfare that it generates. Our economic assessment for today's rule evaluates costs, benefits, economic impacts, and other impacts such as environmental justice, children's health, unfunded mandates, waste minimization incentives, and small entity impacts. To conduct this analysis, we examined the current combustion market and practices, developed and implemented a methodology for examining compliance and social costs, applied an economic model to analyze industry economic impacts, quantified (and, where possible, monetized) benefits, and followed appropriate guidelines and procedures for examining equity considerations, children's health, and other impacts. The data we used in this analysis were the most recently available at the time of the analysis. Data verification, relevance, and public disclosure issues prevented us from incorporating data from certain sources. Furthermore, because our data were limited, the estimated findings from these analyses should be viewed as national, not site specific impacts.

B. Combustion Market Overview

The hazardous waste industry comprises three key segments: hazardous waste generators, fuel blenders and intermediaries, and hazardous waste incinerators. Hazardous waste is combusted at three main types of facilities: Commercial incinerators, on-site incinerators, and waste burning kilns (cement kilns and lightweight aggregate kilns). Commercial incinerators are generally larger in size and designed to manage virtually all types of solids, as well as liquid wastes. On-site incinerators are more often designed as liquid-injection systems that handle liquids and pumpable solids. Waste burning kilns burn hazardous wastes to generate heat and power for their manufacturing processes.

As of the date of our analysis, 172 combustion facilities are permitted to burn hazardous waste in the United States. On-site incinerators (private and government) represent 129 facilities (or 75 percent of this total), commercial incinerators represent 20 facilities, cement kilns represent 18 facilities, and lightweight aggregate kilns represent five facilities. A facility may have one or more combustion systems. Companies that generate large quantities of uniform hazardous wastes generally find it more economical and efficient to combust these wastes on-site using their own noncommercial systems. Commercial incineration facilities manage a wide range of waste streams generated in small to medium quantities by diverse industries. Cement kilns and lightweight aggregate kilns derive heat and energy by combining clean burning (solvents and organics) high-Btu liquid hazardous wastes with conventional fuels. The EPA Biennial Reporting System (BRS) reports a total demand for all combusted hazardous waste, across all three types of facilities, at nearly 3.3 million tons in 1995.

Most of the waste managed by combustion comes from a relatively narrow set of industries. The entire chemical industry in 1995 generated 74 percent of all combusted waste. Within this sector, the organic chemicals subsector was the largest source of waste sent to combustion, providing about 32 percent of all combusted waste. The pesticide and agricultural chemical industry generated 12 percent of the total. No other single sector generated more than 10 percent of the total.

Regulatory requirements, liability concerns, and economics influence the demand for combustion services. Regulatory forces influence the demand for combustion by mandating certain hazardous waste treatment standards (land disposal restriction requirements, etc.). Liability concerns of waste generators affect combustion demand because combustion, by destroying organic wastes, greatly reduces the risk of future environmental problems. Finally, if alternative waste management options are more expensive, hazardous waste generators will likely choose to send their wastes to combustion facilities in order to increase their overall profitability.

Throughout much of the 1980s, hazardous waste combustors enjoyed a strong competitive position and generally maintained a high level of profitability. During this period, EPA regulations requiring combustion greatly expanded the waste tonnage for this market. In addition, federal permitting requirements, as well as powerful local opposition to siting of new incinerators, constrained the entry of new combustion systems. As a result, combustion prices rose steadily, ultimately reaching record levels in 1987. The high profits of the late 1980s induced many firms to enter the market, in spite of the difficulties and delays anticipated in the permitting and siting process. Hazardous waste markets have changed significantly since the late 1980s. In the early 1990s, substantial overcapacity resulted in fierce competition, declining prices, poor financial performance, numerous project cancellations, and some facility closures. Since the mid 1990s, several additional combustion facilities have closed, while many of those that have remained open have consolidated their operations. There still remains significant overcapacity throughout the hazardous waste combustion industry.

C. Baseline Specification

Proper and consistent baseline specification is vital to the accurate assessment of incremental costs, benefits, and other economic impacts associated with today's rule. The baseline essentially describes the world absent today's rule. The incremental impacts of today's rule are evaluated by predicting post MACT compliance responses with respect to the baseline. The baseline, as applied in this analysis, is the point at which today's rule is promulgated. We recognize that the baseline should not simply describe a point in time, but rather should describe the state of the world over time, absent today's rule. The Assessment describes the data sources used in specifying the baseline and examines how each of these factors are likely to change over time in the absence of today's rule. Finally, because this analysis precedes final rule promulgation, data sources used to determine the baseline will necessarily predate the point of rule promulgation. A full discussion of baseline specification is presented in the Assessment document for today's rule.

D. Analytical Methodology and Findings—Engineering Compliance Cost Analysis

The total compliance costs for existing hazardous waste combustion facilities are developed using engineering models that assign pollution control measures and costs to each modeled combustion system. The engineering model also incorporates other compliance costs, such as monitoring requirements, permit modifications, sampling and analyses, and other recordkeeping and reporting requirements. We applied the same basic approach in developing compliance costs for new sources as was used for existing sources. Please see the Assessment document for a complete discussion of the analytical methodology applied for existing and new facilities.

Compliance costs presented in this section are based on a static analysis assuming no market adjustments.

Results from this static analysis should therefore be considered "high-end" estimates. The engineering compliance cost analysis reveals that each combustion system will likely comply with the final standards through a different combination of pollution control measures. This is likely to result in widely diverse per system compliance costs across combustion sectors. The average annualized per system costs, across all sectors, are projected to range from about $0.16 to $0.72 million for compliance with the final standards. Per system costs at the floor are estimated to range from $0.16 to $0.68 million, while these costs under the beyond-the-floor activated carbon injection (ACI) option would range from $0.36 to $0.99 million. Cement kilns were generally found to experience the highest per system compliance costs, while the commercial and on-site incinerators would generally experience the lowest per system costs. The compliance costs per ton of hazardous waste burned are projected to increase from 31 to 41 percent for cement kilns and about 35 percent for lightweight aggregate kilns. The increase for commercial incinerators is estimated at 20 percent of the baseline burn costs. The regulated community is also likely to experience some cost savings as a result of the streamlined administrative procedures established through today's final rule.

The compliance cost analysis contains a variety of uncertainties. The most significant include: The limited availability of emissions data upon which engineering controls are based, lack of baseline air pollution control device data for a number of facilities, and the difficulty in determining the extent to which feed control may be used as a feasible alternative method of compliance. While uncertainties are acknowledged, we do not believe that the above data limitations significantly bias the results either upward or downward.

In addition to costs incurred by the private sector, today's rule is also likely to result in incremental costs and savings to government regulatory entities at different levels as they administer and enforce the new emissions standards and related requirements. EPA Regional offices, state agencies, as well as some local agencies may incur some combination of incremental costs associated with permitting. Modifications of the permitting process related to Clean Air Act provisions could cost governmental entities, nationwide, approximately $330,000 per year. Potential government activities could also include the state rulemaking efforts necessary for agencies to modify their RCRA permitting processes as part of the "Fast-Track" provisions. State rulemakings and authorization of the modified procedures could cost states between $500,000 and $700,000, nationwide. Streamlined RCRA permit modification procedures may also result in aggregate savings ranging from $0.4 to $2.1 million. Overall economic impacts on particular governmental regulatory entities will depend on a variety of factors that are difficult to characterize with precision. Furthermore, economic impacts associated with governmental activities will differ in the way in which a particular governmental entity may choose to implement the requirements.

E. Analytical Methodology and Findings—Social Cost Analysis

We examined social cost impacts potentially associated with today's rule. Total social costs include the value of resources used to comply with the standards by the private sector, the value of resources used to administer the regulation by the government, and the value of output lost due to shifts of resources to less productive uses. To evaluate these shifts in resources and changes in output requires predicting changes in behavior by all affected parties in response to the regulation, including responses of directly-affected entities, as well as indirectly-affected private parties.

For this analysis, social costs are grouped into two categories: economic welfare (changes in consumer and producer surplus), and government administrative costs. The economic welfare analysis conducted for today's rule uses a simplified partial equilibrium approach to estimate social costs. In this analysis, changes in economic welfare are measured by summing the changes in consumer and producer surplus. This simplified approach bounds potential economic welfare losses associated with the rule by considering two scenarios: Compliance costs assuming no market adjustments, and market adjusted compliance costs.

Social costs presented in this section assume market adjustments. Under this scenario, increased compliance costs are examined in the context of likely incentives combustion facilities would have to continue burning hazardous wastes and the competitive balance in different combustion sectors. Furthermore, combustion facilities are likely to try to recover these increased costs by charging higher prices to generators and fuel blenders. This scenario estimates market adjusted compliance costs by assessing baseline profitability, profitability post-rule using different price increase scenarios, and waste management alternatives in order to help predict combustion price increases.

Overall, the difference in aggregate compliance costs for all sectors of the existing regulated community to meet any of the examined scenarios is not substantial. Total annualized market adjusted costs for all sectors are estimated to range from $44 to $50 million under the floor option. Under the beyond-the-floor (ACI) option, these costs are estimated to range from $98 to $107 million. For all sectors to meet the final standards, our best estimate of total annualized costs ranges from $50 to $63 million, depending upon level of price pass-through. All cost estimates are incremental to the baseline. These estimates, however, are not incremental to any mutual requirements potentially associated with cement kilns meeting standards established under the nonhazardous waste burner cement kiln rule.

Cement kilns ($17–24 million) and private on-site incinerators ($20–24 million) make up about 76 percent of aggregate national costs under the final standards. For cement kilns, this is due primarily to the high costs per system. For private on-site incinerators, the high costs are primarily due to the large number of combustion systems. Total costs are less for commercial incinerators ($5–6 million, or 10 percent) because of lower costs per system relative to cement kilns and due to the limited number of commercial units relative to on-site incinerators. Lightweight aggregate kilns ($3 million) represent about 5 to 6 percent of the total costs, due primarily to the limited number of units. Government on-site units make up the remainder.

F. Analytical Methodology and Findings—Economic Impact Analysis

Various market adjustments are expected in response to the increased costs of hazardous waste combustion associated with today's rule. Economic impacts may be measured through numerous factors. This analysis examines market exit estimates, waste reallocations, employment impacts, combustion price increases, industry impacts, and the multirule or joint impacts analysis. Economic impacts presented in this section are distinct from the social costs analysis, which represents only the monetary value of market disturbances.

1. Market Exit Estimates

The hazardous waste combustion industry operates in a dynamic market, with a number of systems/facilities projected to exit the hazardous waste burning market under baseline conditions (see Section V. B of this Part). As a result, this analysis presents market exit estimates expected to result under the baseline, as well as from today's rule. This approach is developed in an effort to present a more accurate estimate of "real-world" incremental impacts resulting from the final standards. Market exit estimates are derived from a breakeven analysis designed to determine system and facility viability. This analysis is subject to several assumptions, including: engineering cost data on the baseline costs of waste burning, cost estimates for pollution control devices, prices for combustion services, and assumptions about the waste quantities burned at these facilities. It is important to note that, for most sectors, exiting the hazardous waste combustion market is not equivalent to closing a plant. (Actual plant closure would only be expected in the case of an exit from the hazardous waste combustion market of a commercial incinerator closing all its systems.)

A relatively small percentage of facilities (including no lightweight aggregate kilns) are projected to stop burning hazardous waste as a result of the incremental requirements associated with today's rule. Those facilities that do exit were found to be marginally profitable in the baseline, burning low quantities of hazardous waste. The economic model post-consolidation results indicate that, in response to today's rule, the following number of combustion facilities are expected to cease burning hazardous waste in the short term: Cement kilns, zero out of 18 facilities; lightweight aggregate kilns, zero out of five facilities; commercial incinerators, zero out of 20 facilities; and private on-site incinerators, 16 out of 111 facilities.

The number of anticipated market exits increases in the long term due to the necessity of recovering the capital costs of combustion. However, because this also holds true in the baseline, an increased number of projected long-term baseline market exits may, in some cases, actually decrease the number of incremental long-term exits. There remain zero incremental market exits for LWAKs and commercial incinerators over the long-term. Incremental market exits for cement kilns, however, increase from zero in the short-term to up to two over the long-term. Incremental market exits for private on-site incinerators decline from 16 in the short-term to 13 over the long-term. This is due to a 62 percent increase in baseline market exits from the short-term to the long-term.

2. Quantity of Waste Reallocated

Combustion systems that can no longer cover costs (i.e., those below the dynamic breakeven quantity) are projected to stop burning hazardous waste. Hazardous wastes from these systems will likely be reallocated to other viable combustion systems at the same facility if there is sufficient capacity, alternative combustion facilities that continue burning, or waste management alternatives (*e.g.*, solvent reclamation). Because combustion is likely to remain the lowest cost option, we expect most reallocated wastes will continue to be managed at combustion facilities.

The economic model indicates that, in response to today's rule, between 14,000 to 42,000 tons of currently burned hazardous waste could be reallocated to other facilities or waste management alternatives. This estimate represents between 0.4 and 1.3 percent of the total quantity of combusted hazardous wastes and is incremental to projected long-term baseline reallocations of approximately 100,000 tons. Currently, there is more than adequate capacity within the remaining sources of the combustion market to accommodate this reallocated waste, even at the high-end estimate.

3. Employment Impacts

Today's rule is likely to cause employment shifts across all of the hazardous waste combustion sectors. These shifts will occur as specific combustion facilities find it no longer economically feasible to keep all of their systems running, or to stay in the hazardous waste market at all. When this occurs, workers at these locations may lose their jobs. At the same time, the rule may result in employment gains, as new purchases of pollution control equipment stimulate additional hiring in the pollution control manufacturing sector and as additional staff are required at combustion facilities for various compliance activities.

a. Employment Impacts—Losses. Primary employment losses in the combustion industry are likely to occur when combustion systems consolidate the waste they are burning into fewer systems or when a facility exits the hazardous waste combustion market altogether. Operation and maintenance labor hours are expected to be reduced for each system that stops burning hazardous waste. For each facility that completely exits the market, employment losses will likely also include supervisory and administrative labor.

Total incremental employment dislocations potentially resulting from the final standards range from approximately 100 to 230 full-time-equivalent (FTE) jobs under the floor and the recommended options. Under the beyond-the-floor (ACI) option the high-end estimate of employment dislocations increases by almost 9 percent to approximately 250 FTEs. Among the different sectors, on-site incinerators are responsible for most of the total estimated number of job losses. Their significant share of the losses is a function of both the large number of on-site incinerators in the universe as well as the relatively high number of expected exits within this sector. Cement kilns are responsible for the second largest number of expected employment losses due to the number of systems that consolidate waste-burning at these facilities.

b. Employment Impacts—Gains. In addition to employment losses, today's rule will also lead to job gains as firms invest to comply with the various requirements of the rule and add additional operation and maintenance personnel for the new pollution equipment and other compliance activities, such as new reporting and record keeping requirements.

The total annual employment gains (without particulate matter continuous emission monitors) associated with the floor and recommended final standards are approximately 300 FTEs. The beyond-the-floor (ACI) option may increase the high-end employment gain estimate to as much as 620 FTEs. About one-third to one-half of all estimated job gains are projected to occur in the pollution control equipment industry. The remaining job gains will occur at the combustion facilities as additional personnel are hired for operation and maintenance and permitting requirements.

While it may appear that this analysis suggests overall net job creation under particular options and within particular combustion sectors, such a conclusion would be inappropriate. Because the gains and losses occur in different sectors of the economy, they should not be added together. Doing so would mask important distributional effects of the rule. In addition, the employment gain estimates reflect within sector impacts only and therefore do not account for job displacement across sectors as

investment funds are diverted from other areas of the larger economy.

4. Combustion Price Increases

All combustion facilities that remain in operation will experience increased operational costs under today's rule. To protect their profits, each facility will have an incentive to pass these increased costs on to their customers (generators and blenders) in the form of higher combustion prices. Generators and blenders are expected to pay these higher prices unless they have less expensive waste management alternatives.

Under the theory of market price adjustments, as applied in the economic model, waste would be sent to the least expensive alternatives first, all else being equal. At the same time, prices would rise to the point at which all demand for waste management is met. In theory, the last tons would be managed by substituting non-combustion or waste minimization alternatives. The most efficient waste management substitute for these wastes would cap price increases, resulting in a new market price. Combustion facilities, in turn, would each set their prices at this market price in order to maximize profits. Less efficient waste management scenarios may earn just enough to stay in business over the short term, but would not recover capital costs. Combustion systems operating above the market price would lower their prices or exit the market. In reality, the hazardous waste combustion marketplace is very complex, and the determination of an adjusted market price would be an ongoing process affected by numerous factors, including price differentials among regions, waste stream types, and generators.

Available economic data on the cost of waste management alternatives for combusted hazardous waste, including source reduction and other waste minimization options, are not precise enough to allow for an accurate estimate of the maximum price increase that combustors may pass through to generators and fuel blenders. However, available data do indicate that the demand for hazardous waste combustion is relatively inelastic and that combustion facilities are likely to pass through approximately 75 percent of compliance costs in the least-cost sector. High-cost sectors, however, may pass through less than the 75 percent estimate. We also analyzed a 25 percent price pass through scenario. Under the recommended final standards, the weighted average combustion price per ton is projected to increase anywhere from about 0.5 to 11 percent, depending upon sector and scenario. Prices were found to increase by as much as 25 percent under the beyond-the-floor (ACI) option.

5. Industry Profits

Hazardous waste-burning profits for all combustion sectors, on average, are expected to decline post-rule. This decline, however, will not be consistent across sectors. Hazardous waste-burning profits for cement kilns are projected to decrease by no more than 10 percent, while profits for commercial incinerators would decrease by no more than 2 percent. These profit margin estimates are based on a simple calculation that subtracts projected operating costs from revenues. These estimates provide relative measures of profit changes and should not be used to predict absolute profit margins in these industries.

Compliance costs associated with meeting today's rule are estimated to represent less than 2 percent of the pollution control expenditures in industries that contain facilities with on-site incinerators. For cement kilns, however, compliance costs are expected to increase total pollution control expenditures by no more than 60 percent at waste-burning facilities.

To comply with today's rule, many facilities will need to purchase additional pollution control equipment. From the perspective of the pollution control industry, these expenditures will translate into additional revenues and profits. Total profits for the air pollution control industry are likely to increase as a result of today's rule.

6. National-Level Joint Economic Impacts

Analyzing national-level economic impacts in a market context provides an opportunity to assess the distributional effects on cement producers, lightweight aggregate kilns, and commercial incinerators. As a supplement to today's analysis, we used the model developed for the Portland Cement MACT rulemaking to estimate national-level economic impacts of today's Hazardous Waste Combustion (HWC) MACT rule in an interactive market context. This analysis was conducted to estimate joint impacts of today's rule in conjunction with the Portland Cement MACT rule and the Cement Kiln Dust rule. The Portland Cement MACT model incorporates compliance costs for each affected cement kiln, lightweight aggregate kiln, and commercial incinerator and then projects national level impacts associated with these facilities and for the general Portland cement market. On-site incinerators were not included in this analysis because they do not generally compete in the commercial hazardous waste combustion market. Results from this analysis are separated into three categories: Market-, industry-, and social-level impacts associated with imposition of the recommended final standards and the two HWC MACT options (floor and beyond-the-floor (ACI)).

Joint national-level economic impact results combining the HWC MACT options with the Portland Cement MACT and Cement Kiln Dust Rule are summarized in this section. Market, industry, and social cost impacts are discussed. This analysis assumes simultaneous implementation of all three rules.

Market-level impacts for this joint scenario, assuming the floor option, result in increased costs of cement production and burning hazardous waste at affected cement kilns. The national market price of Portland cement is projected to increase by about 2.0 percent, while domestic production would decline by about 4.0 percent. Market impacts for the joint scenario with the recommended final standards and the beyond-the-floor (ACI) option were found to be generally equivalent to results under the floor option. The extent to which domestic cement producers face competition from foreign cement imports will limit the degree of domestic price increases. Furthermore, the U.S. cement market is regionally specific. While nationwide average market price and production impacts are estimated to be relatively minor, producers in selected regions may experience significant revenue and production impacts, either positive or negative.

Under the joint scenario with the floor option, the market prices for both liquid and solid hazardous waste incineration are projected to increase by about 8.6 percent and 1.4 percent, respectively. The price change for liquids is higher than that observed for the floor only, while the price change for solids is virtually the same. For cement kilns, the increased costs associated with all three regulations, combined with their reductions in cement production, is projected to cause their supply of hazardous waste incineration services to fall by around 11.0 percent for both liquids and solids. In response to the regulatory costs, lightweight aggregate kilns also reduce their supply of liquid hazardous waste incineration by around 9.0 percent. For commercial incinerators, the supply of hazardous waste incineration increases by nearly 6.0 percent for liquids and close to 3.0

percent for solids. The market impacts for the joint scenario, using the recommended final standards and the beyond-the-floor (ACI) alternative, were found to be similar to those for the floor option. One exception is the market price for liquids, which increases by a greater percentage under the joint scenario with the beyond-the-floor (ACI) alternative. This results in a greater reduction in liquid hazardous waste burned at cement kilns and lesser decreases in liquids incinerated at commercial incinerators.

Industry-level impacts under the joint impacts scenario with the floor option indicate that Portland cement plants may see total gross revenues decline by nearly 3.0 percent from their current baseline. This decline in total revenue results from foregone revenues associated with producing less Portland cement and lost revenues from burning hazardous waste. The total net costs for these cement plants are also projected to decrease, reflecting the increase in costs associated with burning hazardous waste, plus the increase in cement kiln dust management costs, and the decrease in costs associated with producing less cement. The net result, indicates a decline in aggregate nationwide earnings before interest and taxes (EBIT) of about 5.5 percent from the current baseline. Lightweight aggregate kilns are also projected to incur a decline in hazardous waste-related EBIT of about 5.5 percent. Alternatively, as a group, the commercial incinerators are expected to experience a net gain of around 11.0 percent in annual earnings under this joint scenario with the floor option. These joint industry-level impacts on EBIT indicate a similar pattern across each regulatory scenario, except for lightweight aggregate kilns under the beyond-the-floor (ACI) option, where EBIT declines by nearly 14.0 percent. Industry-level impacts under the joint impact analysis also includes estimates of plant or system closures. The joint analysis under each hazardous waste combustion scenario indicates that three cement plants and 14 to 15 kilns may cease production. Furthermore, five cement kilns are projected to stop burning hazardous waste. The analysis also indicates that one lightweight aggregate kiln may discontinue burning hazardous waste and one to two commercial incinerators may close operations and stop burning hazardous waste with the joint implementation of all three rules. These market exit estimates include projected baseline closures.

Social-level impacts, or social costs, under the joint scenarios indicate that, for both Portland cement and hazardous waste incineration services, consumers are worse off due to the increase in prices and reductions in consumption. For producers of Portland cement and incineration services, cement kilns and lightweight aggregate kilns are worse off (on a nationwide basis) due to the decline in market share, while commercial incinerators are better off due to the increase in prices and market share.

Refer to the final Assessment document and appendices for a complete discussion of joint impacts.

G. Analytical Methodology and Findings—Benefits Assessment

This section discusses the benefits assessment for today's rule. Results from our multi-pathway human health and ecological risk assessment are used to evaluate incremental benefits to society of emission reductions at hazardous waste combustion facilities.[351] Total monetized benefits are estimated at $19.2 million. This section also summarizes how today's rule may lead to changes in the types and quantities of wastes generated and managed at combustion facilities through increased waste minimization.

1. Human Health and Ecological Benefits

a. Risk Assessment Overview. The basis for the benefits assessment is our multi-pathway risk assessment model. This model estimates baseline risks from hazardous waste combustion emissions, as well as expected risks after today's rule is implemented. The model examines both inhalation and ingestion pathways to estimate human health risks. A less detailed screening-level analysis is used to identify the potential for ecological risks. The risk assessment is carried out for the regulatory baseline (no regulation), the final recommended standards, and the two MACT options (floor and beyond-the-floor (ACI)). The assessment uses a case study approach in which 76 hazardous waste combustion facilities and their site-specific land uses and environmental settings are characterized. The randomly selected facilities in the study include 43 on-site incinerators, 13 commercial incinerators, 15 cement kilns, and five lightweight aggregate kilns.

The pollutants analyzed in the risk assessment are dioxins and furans, selected metals, particulate matter, chlorine, and hydrogen chloride. The metals modeled in the analysis include antimony, arsenic, barium, beryllium, cadmium, chromium, copper, cobalt, lead, manganese, mercury, nickel, selenium, silver, and thallium. The fate and transport of the emissions of these pollutants is modeled to arrive at concentrations in air, soil, surface water, and sediments. To assess human health risks, these concentrations can be converted to estimated doses to the exposed populations using exposure factors such as inhalation and ingestion rates. These doses are then used to calculate cancer and noncancer risks, if the appropriate health benchmarks are available. To assess potential ecological risks, soil, surface water and sediment concentrations are compared with eco-toxicological criteria representing protective screening values for ecological risks. Because these criteria are based on *de minimis* ecological effects and thus represent conservative values, an exceedance of the eco-toxicological criteria does not necessarily indicate ecological damages. It simply suggests that potential damages cannot be ruled out.

To characterize the cancer and noncancer risks to the populations listed above, the risk assessment breaks down the area surrounding each modeled combustion facility into 16 polar grid sectors. For each polar grid sector, risk estimates can be developed for different age groups and receptor populations (*e.g.*, 0 to 5 year old children of subsistence fishers). This approach is used because geographic and demographic differences across polar grid sectors leads to sectoral variation in individual risks. Thus, individual risk results are aggregated across sectors to generate the distribution of risk to individuals in the affected area. An additional Monte Carlo analysis was conducted to incorporate variability in other exposure factors such as inhalation and ingestion rates for three scenarios that were thought to comprise the majority of the risk to the study area population. These scenarios address cancer risk from dioxin exposure to beef and dairy farms and noncancer risk from methyl mercury exposure to recreational anglers.

b. Human Health Benefits—Methodology. Human health benefits are assessed by identifying those pollutants for which emission reductions are expected to result in improvements to human health or the

[351] The RIA for the proposal included results from a screening analysis designed to assess the potential magnitude of property value benefits caused by the MACT standards. This analysis is not included in the Economic Assessment for the Final Rule due to limitations of the benefits transfer approach and because property value benefits likely overlap with human health and ecological benefits. Including property value benefits would result in double-counting.

environment. The relevant results from the risk assessment for the pollutants of concern are then examined, focusing on population risk results based on central tendency exposure parameters. The risk assessment data are expressed as indicators of potential benefits, such as reduced cancer incidence or reduced potential for developing particular illnesses or abnormalities. Where possible, monetary values are assigned to these benefits using a benefits transfer approach.

To assign monetary values to cancer risk reduction estimates, we apply the value of a statistical life to the risk reduction expected to result from the MACT standards. The value of a statistical life is based on an individual's willingness to pay to reduce a risk of premature death or their willingness to accept increases in mortality risk. Because there are many different estimates of value of a statistical life in the economic literature, we estimate the reduced mortality benefits using a range of value of a statistical life estimates from 26 policy-relevant value-of-life studies. The estimated value of a statistical life figures from these studies range from $0.7 million to $15.9 million (adjusted to 1996 dollars), with a mean value of $5.6 million. The expected number of annual premature statistical deaths avoided are multiplied by the value of a statistical life estimate to determine the estimated monetary value of the mortality risk reductions.

A variety of approaches are used to evaluate the benefits associated with noncancer risk reductions. For particulate matter, both morbidity and mortality benefits are estimated. Particulate matter is the only non-carcinogen in the risk assessment for which there is sufficient dose-response information to estimate numbers of cases of disease and deaths from exposures. For lead and mercury, upper bound estimates of the population at risk are used. This is because information is only available on the potential of an adverse effect, with no estimates available on the likelihood of these effects.

We assign monetary values to noncancer benefits using a direct cost approach which focuses on the expenditures averted, and the opportunity cost of time spent in the hospital, by decreasing the occurrence of an illness or other health effect. While the willingness to pay approach used for valuing the cancer risk reductions is conceptually superior to the direct cost approach, measurement difficulties, such as estimating the severity of various illnesses, precludes us from using this approach here. Direct cost measures are expected to understate true benefits because they do not include cost of pain, suffering, and time lost. On the other hand, because we use upper bound estimates of the population at risk, we cannot conclude that the results are biased in one direction or the other.

c. Human Health Benefits—Results. Human health benefits are expected from both cancer and noncancer risk reductions. Less than one cancer case per year is expected to be avoided due to reduced emissions from combustion facilities. The majority of the cancer risk reductions are linked to consumption of dioxin-contaminated agricultural products exported beyond the boundaries of the study area. Less than one-third of the cancer risk reductions occur in local populations living near combustion facilities. Cancer risks for local populations are attributed primarily to reductions in arsenic and chromium emissions. These pollutants account for almost 85 percent of total local cancer incidences in the baseline. By applying value of a statistical life estimates to these cases, the total annual cancer risk reductions (benefits) in going from the baseline to the final standards, are valued at between $0.13 and $9.9 million, with a best estimate of approximately $2.02 million.

Across all receptor populations, individual cancer risks are greatest for subsistence farmers. Dioxin is the primary pollutant that drives the cancer risk for this sensitive receptor population. A lack of population data prevented us from quantifying benefits for this sub-population. It is possible, however, to characterize the reduction in risk from baseline to implementation of today's rule. With the exception of one particular scenario, the cancer risk for all subsistence farmers is reduced to below levels of concern after implementation of today's rule. Today's rule is also expected to result in lower cancer risks for children of subsistence farmers.

Most of the noncancer human health benefits from today's rule come from reductions in particulate matter. Some additional noncancer benefits come from reduced blood lead levels in children living near combustion facilities. Total annual noncancer benefits from quantifiable sources are valued at between $9.85 and $73.8 million, with a best estimate of about $17.2 million. Uncertainties implicit in the quantitative mercury analysis continue to be sufficiently great so as to limit its ultimate use in the monetization of noncancer benefits. Please review the Addendum and chapter six of the Assessment document for a complete discussion of human health benefits resulting from today's rule.

d. Ecological Benefits—Methodology. Ecological benefits are based on a screening analysis for ecological risks that compares soil, surface water, and sediment concentrations with eco-toxicological criteria based on *de minimis* thresholds for ecological effects. Because these criteria represent conservative values, an exceedance of the eco-toxicological criteria only indicates the potential for adverse ecological effects and does not necessarily indicate ecological damages. For this reason, benefits of avoiding adverse ecological impacts are discussed only in qualitative terms.

The basic approach for determining whether ecosystems or biota are potentially at risk consists of five steps: (1) Identify susceptible ecological receptors that represent relatively common species and communities of wildlife, (2) develop eco-toxicological criteria for receptors that represent acceptable pollutant concentrations, (3) estimate baseline and post-rule pollutant concentrations in sediments, soils, and surface waters of the study areas, (4) for each land area or water body modeled, compare the modeled media concentrations to ecologically protective levels to estimate eco-toxicological hazard quotients, and (5) total the land and water areas containing hazard quotients exceeding one and compare this number for the baseline and post-rule scenario. The reduction in the land and water area potentially at risk indicates a potential for avoiding adverse ecological impacts. Monetary values are not assigned to these potential benefits.

e. Ecological Benefits—Results. Ecological benefits are attributable primarily to reductions in dioxin and mercury for terrestrial ecosystems. For these ecosystems, hazard quotients are reduced to acceptable levels for approximately 115 to 150 square kilometers of land located within 20 kilometers of all combustion facilities. Ecological benefits associated with freshwater aquatic ecosystems are attributable to reductions in lead, with hazard quotients reduced to acceptable levels for approximately 35 to 40 square kilometers of these surface waters. These reductions of ecological risk criteria below levels of concern only indicates a potential for ecological improvement.

2. Waste Minimization Benefits

While many facilities may implement end-of-pipe controls such as fabric

filters and high-energy scrubbers to achieve MACT control, emission reductions may also be accomplished by reducing the volume or toxicity of wastes currently combusted. In addition, generators may also consider waste management alternatives such as solvent recycling. For purposes of this analysis, these types of responses will be referred to as "waste minimization." This section summarizes the potential waste minimization benefits resulting from implementation of today's rule.

As today's rule is implemented, the costs of burning hazardous waste will increase, resulting in market incentives for greater waste minimization. To predict the quantity of waste that could be reallocated from combustion to waste minimization due to economic considerations, we conducted a comprehensive waste minimization analysis that considered in-process recycling, out-of-process recycling, and source reduction. The objective of the analysis was to predict the quantity of hazardous wastes that may be reallocated to these waste minimization alternatives under different combustion price increase scenarios.

Overall, the analysis shows that a variety of waste minimization alternatives are available for managing those hazardous waste streams that are currently combusted. The quantity projected to be reallocated from combustion to waste minimization alternatives, however, depends upon the expected price increase for combustion services. At potential price increases ranging from $10 to $20 per ton, as much as 240,000 tons of hazardous waste may be reallocated from combustion to waste minimization alternatives. This represents approximately 7 percent of the total quantity of hazardous waste currently combusted.

VI. What Considerations Were Given to Issues Like Equity and Children's Health?

By applicable statute and executive order, we are required to complete an analysis of today's rule with regard to equity considerations and other regulatory concerns. This section assesses the potential impacts of today's rule as it relates to environmental justice, children's health issues, and unfunded federal mandates. Small entity impacts are examined in a separate section.

A. Executive Order 12898, "Federal Actions To Address Environmental Justice in Minority Populations and Low-Income Populations" (February 11, 1994)

This Order is designed to address the environmental and human health conditions of minority and low-income populations. To comply with the Executive Order, we have assessed whether today's rule may have disproportionate effects on minority populations or low-income populations. We have analyzed demographic data presented in the reports "Race, Ethnicity, and Poverty Status of the Populations Living Near Cement Plants in the United States" (EPA, August 1994) and "Race, Ethnicity, and Poverty Status of the Populations Living Near Hazardous Waste Incinerators in the United States" (EPA, October 1994). These reports examine the number of low-income and minority individuals living near a relatively large sample of cement kilns and hazardous waste incinerators and provide county, state, and national population percentages for various sub-populations. The demographic data in these reports provide several important findings when examined in conjunction with the risk reductions projected from today's rule.

We find that combustion facilities, in general, are not located in areas with disproportionately high minority and low-income populations. However, there is evidence that hazardous waste burning cement kilns are somewhat more likely to be located in areas that have relatively higher low-income populations. Furthermore, there are a small number of commercial hazardous waste incinerators located in highly urbanized areas where there is a disproportionately high concentration of minorities and low-income populations within one and five mile radii. The reduced emissions at these facilities due to today's rule could represent meaningful environmental and health improvements for these populations. Overall, today's rule should not result in any adverse environmental or health effects on minority or low-income populations. Any impacts on these populations are likely to be positive due to the reduction in emissions from combustion facilities near minority and low-income population groups. The Assessment document available in the RCRA docket established for today's rule presents the full Environmental Justice Analysis.

B. Executive Order 13045: Protection of Children From Environmental Health Risks and Safety Risks (62 FR 19885, April 23, 1997)

Executive Order 13045: "Protection of Children from Environmental Health Risks and Safety Risks" (62 FR 19885, April 23, 1997) applies to any rule that: (1) Is determined to be "economically significant" as defined under E.O. 12866, and (2) concerns an environmental health or safety risk that EPA has reason to believe may have a disproportionate effect on children. If the regulatory action meets both criteria, the Agency must evaluate the environmental health or safety effects of the planned rule on children, and explain why the planned regulation is preferable to other potentially effective and reasonably feasible alternatives considered by the Agency.

Today's final rule is not subject to the Executive Order because it is not economically significant as defined under point one of the Order, and because the Agency does not have reason to believe the environmental health or safety risks addressed by this action present a disproportionate risk to children.

The topic of environmental threats to children's health is growing in regulatory importance as scientists, policy makers, and village members continue to recognize the extent to which children are particularly vulnerable to environmental hazards. Recent EPA actions including today's rule, are in the forefront of addressing environmental threats to the health of children. The risk assessment conducted in support of today's rule indicates that children are the beneficiaries of much of the reduction in potential illnesses and other adverse effects associated with combustion facility emissions. The risk assessment used a multi-pathway and multi-constituent evaluation in order to examine potential effects of combined exposures on children. Setting environmental standards that address combined exposures and that are protective of the heightened risks faced by children are both goals named within EPA's "National Agenda to Protect Children's Health from Environmental Threats." Areas for potential reductions in risks and related health effects that were identified by the risk assessment are all targeted as priority issues within EPA's September 1996 report, Environmental Health Threats to Children.

A few significant physiological characteristics are largely responsible for children's increased susceptibility to

environmental hazards. First, children eat proportionately more food, drink proportionately more fluids, and breathe more air per pound of body weight than do adults. As a result, children potentially experience greater levels of exposure to environmental threats than do adults. Second, because children's bodies are still in the process of development, their immune systems, neurological systems, and other immature organs can be more easily and considerably affected by environmental hazards. The connection between these physical characteristics and children's susceptibility to environmental threats are reflected in the higher baseline risk levels for children living near hazardous waste combustion facilities. The risk assessment addresses threats to children's health associated with hazardous waste combustion by evaluating reductions in risk for children as well as for adults and the population overall. For all exposed sub-populations, the assessment evaluated risks to four different age groups: 0 to 5 years, 6 to 11 years, 12 to 19 years, and adults over 20 years. Where possible, the risk assessment has provided both population and individual risk results for children. Both cancer and noncancer risks are examined across the age groups of children, focusing on the most susceptible sub-populations. The combined effects of several carcinogens, one of the goals named within the Agency's "National Agenda to Protect Children's Health from Environmental Threats," were examined.

The key findings from the risk assessment indicate that children do not face significant cancer risks from hazardous waste combustion emissions. Only in the case of children of subsistence farmers do baseline cancer risks exceed 1×10^{-5} for the most highly exposed children. Implementation of the final standards would reduce these risks below levels of concern[352].

The analysis also found that much of the noncancer risk reductions resulting from implementation of today's rule may benefit children specifically. These are projected as a result of lower exposures to mercury, lead, and particulate matter, three types of pollutants addressed in the noncancer risk reductions which primarily affect children. Mercury emission reductions may reduce risks of developmental abnormalities in potential future offspring of recreational anglers and subsistence fishermen. In addition, particulate matter reductions may prevent some asthma attacks affecting children, but these benefits have not been quantified. Finally, reduced lead exposures for children are expected from today's rule. This benefit may help prevent cognitive and nervous system developmental abnormalities for children of the most highly exposed sub-populations, including subsistence fishermen and beef and dairy farmers. Analytical and data limitations prevented reasonable monetization of these findings.

C. Unfunded Mandates Reform Act of 1995 (UMRA) (Pub. L. 104–4)

Executive Order 12875, "Enhancing the Intergovernmental Partnership" (October 26, 1993), calls on federal agencies to provide a statement supporting the need to issue any regulation containing an unfunded federal mandate and describing prior consultation with representatives of affected state, local, and tribal governments. Signed into law on March 22, 1995, the Unfunded Mandates Reform Act (UMRA) supersedes Executive Order 12875, reiterating the previously established directives while also imposing additional requirements for federal agencies issuing any regulation containing an unfunded mandate.

Today's rule is not subject to the requirements of sections 202, 204 and 205 of UMRA. In general, a rule is subject to the requirements of these sections if it contains "Federal mandates" that may result in the expenditure by State, local, and tribal governments, in the aggregate, or by the private sector, of $100 million or more in any one year. Today's final rule does not result in $100 million or more in expenditures. The aggregate annualized social costs for today's rule are projected to range from $50 to $63 million under the final standards.

For rules that are subject to the requirements of these sections, key requirements include a written statement with an analysis of benefits and costs; input from state, local and tribal governments; and selection of the least burdensome option (if allowed by law) or an explanation for the option selected. We recognize the potential for aggregate one-time capital expenditures to exceed $100 million in any one year should various industry sectors choose not to amortize capital expenditures. Under this scenario, the Assessment document for today's rule meets analytical requirements established under UMRA.

Today's rule is not subject to the requirements of section 203 of UMRA. Section 203 requires agencies to develop a small government Agency plan before establishing any regulatory requirements that may significantly or uniquely affect small governments, including tribal governments. EPA has determined that this rule will not significantly or uniquely affect small governments. The small entity impacts analysis, presented in Appendix G of the final Assessment, found that no hazardous waste combustion units are owned by small governments.

Finally, because we are issuing today's rule under the statutory authority of the Clean Air Act, the rule should be exempt from all relevant requirements of the UMRA. In addition, compliance with the rule is voluntary for nonfederal governmental entities since state and local agencies choose whether or not to apply to EPA for the permitting authority necessary to implement today's rule.

VII. Is Today's Rule Cost Effective?

We have developed a cost-effectiveness measure that examines cost per unit reduction of emissions for each hazardous air pollutant, pollutant group, or surrogate. Cost-effectiveness measures are useful for comparing across different air pollution regulations. Moreover, we have typically used cost-effectiveness measures (defined as "dollar-per-unit of pollutant removed") to assess the decision to go beyond-the-floor for MACT standards.

Developing cost-effectiveness estimates for individual air pollutants assists us in making beyond-the-floor decisions for individual pollutants. The two analytic components of the individual cost-effectiveness analysis are: (1) Estimates of emission control expenditures per air pollutant for each regulatory option, and (2) estimates of emission reductions under each regulatory option. Individual cost-effectiveness measures for each MACT option are calculated as follows:

- HWC MACT Floor—Costs and emission reductions are incremental to the baseline,
- HWC MACT Final Standards—Costs and emission reductions are incremental to the MACT Floor, and
- Beyond-the-Floor—Activated Carbon Injection (ACI) MACT—Costs and emission reductions are incremental to the MACT Floor.

Single-level cost-effectiveness results across all HWC MACT options range

[352] Also, the analysis used the same approach to estimate cancer risks in both adults and children. However, individuals exposed to carcinogens in the first few years of life may be at increased risk of developing cancer. For this reason, we recognize that significant uncertainties and unknowns exist regarding the estimation of lifetime cancer risks in children. We also note that this analysis of cancer risks in children has not been externally peer reviewed.

from seven hundred dollars to $34.3 million per megagram reduced for all pollutants, individually, except dioxin. Dioxin control ranges from $25,000 to $903,000 per gram reduced. Dioxin control for incinerators to meet the floor standard is estimated at $903,000 per gram, with an additional $368,000 per gram to go from the floor to the final BTF TEQ standard. The control of SVM emitted from cement kilns is estimated to cost $67,000 per megagram from the baseline to the floor. Moving from the floor standard to the final BTF SVM standard for cement kilns is estimated to cost $502,000 per megagram. These results indicate that the more highly toxic pollutants such as dioxin are often much more expensive to control on a per-gram basis.

We did not apply cost-effectiveness alone in establishing beyond-the-floor levels for selected constituents regulated under the final HWC MACT standards. Several other measurement factors were incorporated into the beyond-the-floor decision, including: health benefits (especially those for children), regulatory precedent, cost-effectiveness of other MACT standards, and reliability of baseline data.

The method for calculating cost-effectiveness makes several simplifying assumptions. The two most important address the metrics employed for measuring cost-effectiveness and the actual methodology used to estimate the cost and emission reduction figures. Alternative measurement criteria for different constituents may lead to perceived distortions in scope. The cost-effectiveness methodology assumes that all facilities continue operating and install pollution control equipment or implement feed reductions to comply with the MACT standards. Both of these limiting assumptions may lead to overstatement or understatement of results. Other limitations that will influence these cost-effectiveness estimates include: (1) The feed control costing approach, which may lead to the overstatement of expenditures per pollutant due to the assumption of upper-bound cost estimates, (2) apportionment of costs, which are currently assigned according to the percentage reduction required to meet the standard for each pollutant controlled by the device, and (3) the assumption that units control emissions to the 70 percent design level.

VIII. How Do the Costs of Today's Rule Compare to the Benefits?

Comparing overall costs and benefits may help provide an assessment of this rule's overall efficiency and impacts on society. This section compares the total social costs of today's rule with its total monetized and nonmonetized benefits. The total annual monetized benefits of today's rule are estimated at $19.2 million (undiscounted) for the recommended final standards. These monetized benefits, however, may represent only a subset of potential avoided health effects, both cancer and noncancer cases. In comparison, the total annualized social costs of the rule are projected to range from $50 to $63 million. Social costs also include government administrative costs.

Across regulatory options, costs exceed monetized benefits more than two-fold. However, today's rule is expected to provide benefits that cannot be readily expressed in monetary terms. These benefits include health benefits to sensitive sub-populations such as subsistence anglers and improvements to terrestrial and aquatic ecological systems. When these benefits are taken into account, along with equity-enhancing effects such as environmental justice and impacts on children's health, the benefit-cost comparison becomes more complex but also more favorable. Consequently, the final regulatory decision becomes a policy judgment which takes into account efficiency as well as equity concerns and the positive direction of real, but unquantifiable, benefits.

IX. What Consideration Was Given to Small Businesses?

A. Regulatory Flexibility Act (RFA) as amended by the Small Business Regulatory Enforcement Fairness Act of 1996 (SBREFA), 5 USC 601 et seq.

This Act generally requires an agency to prepare a regulatory flexibility analysis of any rule subject to notice and comment rulemaking requirements under the Administrative Procedure Act or any other statute unless the agency certifies that the rule will not have a significant economic impact on a substantial number of small entities. Small entities include small businesses, small not-for-profit enterprises, and small governmental jurisdictions.

We have determined that hazardous waste combustion facilities are not owned by small entities (local governments, tribes, etc.) other than businesses. Therefore, only businesses were analyzed. For the purposes of the impact analyses, small entity is defined either by the number of employees or by the dollar amount of sales. The level at which a business is considered small is determined for each Standard Industrial Classification (SIC) code by the Small Business Administration.[353]

Affected individual waste combustors (incinerators, cement kilns, and lightweight aggregate kilns) will bear the impacts of today's rule. These units will incur direct economic impacts as a result of today's rule. While not required under the Act and guidelines, we have also examined potential secondary impacts on small business units potentially affected by today's rule, such as hazardous waste generators and fuel blenders. Although hazardous waste combustors are the only group that would bear direct economic impacts from today's rule, this "secondary impacts" analysis was conducted because we assume that some portion of the burden would be passed on to customers of combustion facilities through price increases. This section describes the small entity analysis we conducted in support of today's rule.

B. Analytical Methodology

For combustors and blenders, we conducted facility-by-facility analyses of small businesses. We examined company data on employment and sales and then compared these data to statutory small business thresholds based on employment or annual sales, as defined for its industry by the Small Business Administration in 13 CFR part 121. Combustion or blender units where the facility or parent company data fell below the small business thresholds were classified as small businesses. The analysis was more complex for generators, however, because the rule may indirectly affect more than 11,000 generators. Given the large number of generators who would be affected by today's rule, it was necessary to conduct an initial, broad screening analysis to identify small business generators that might face significant secondary impacts. This screening analysis involved assigning each facility to an industry group, identifying industry groups that are dominated by small businesses, and then assuming that all generators in those small business dominated industries are small. Further analyses were then conducted on these groups or specific facilities.

We next compiled compliance cost data in an effort to establish a threshold for measuring "significant economic impact." This threshold was set where compliance costs exceed one percent of

[353] SIC codes are used rather than the new NAICS codes because waste generator, blender, and combustor data were only available according to SIC code. However, a general conversion table containing NAICS codes for each reported SIC code is presented in the Assessment document.

facility gross sales. If costs do not exceed one percent of sales, then the regulation is unlikely to have a significant economic impact on small businesses within the category examined. Finally, we examined whether the significant economic impact (if any) would be borne by a "substantial number" of small businesses. If the regulation results in required compliance costs exceeding one percent of gross sales for more than 100 small businesses or 20 percent of all small businesses within the industry category examined, then the "substantial number" threshold is exceeded.

The cost of compliance with the new standards will determine the severity of impacts on small businesses. The costs to combustors used in this analysis coincide with the 70 percent engineering standard analyzed in the full economic assessment. The price increases experienced by generators and blenders were calculated on a per ton basis of waste shipped using 25 and 75 percent price pass-through scenarios. The price impacts were assumed to be uniform across facility types, with both generators and blenders experiencing the price pass-through effect. In practice, this pass through would likely be split between the two, depending on market factors. Note that the impacts from these price increases are indirect effects, as only hazardous waste combustors bear direct economic impact of today's rule.

C. Results—Direct Impacts

Only six facilities, out of the total universe of 172 hazardous waste combustion facilities, met the definition of small businesses. Of these six, two were found to experience annual compliance costs exceeding one percent of sales. Both of these facilities are owned by a common parent that qualifies as a small business. Therefore, this final rule affects a very limited number of small business combustors and has effects of greater than one percent on only two of these facilities (one business).

While the significant economic impact threshold was exceeded for two facilities (one corporation), these impacts do not extend to a substantial number of small entities. With just two facilities exceeding the one percent threshold, neither a substantial number of facilities nor a substantial fraction of an affected industry would face these impacts. After considering the economic impacts of today's final rule on small entities, I certify that this action will not have a significant economic impact on a substantial number of small entities.

Although this final rule will not have a significant economic impact on a substantial number of directly impacted small entities, EPA nonetheless has assessed the potential of this rule to adversely impact small entities subject to the rule.

D. Results—Indirect Impacts

Direct impacts of the rule extend only to combustors of hazardous waste. To supplement our analysis, indirect impacts on generators and blenders were also examined. We understand that some portion of the combustor's compliance costs would most likely be passed on to generators and blenders, and we have made an effort to analyze these impacts in the spirit of the legislation.

We found that indirect economic effects on generators would not impose a significant impact on a substantial number of small generators. Under both price pass-through scenarios (25 and 75 percent), some generators exceeded the one percent cost as percentage of sales threshold for "significant impacts." In no case, however, was the "substantial number" threshold exceeded. Under the 25 percent pass-through scenario, 18 generators had a cost as percentage of sales greater than one percent, but that accounts for only 0.85 percent of all small business generators. While the impact threshold was exceeded by 58 generators in the 75 percent pass through scenario, this is still less than the 100 entity threshold established for a substantial number. You should note that the sales thresholds were selected conservatively as the average sales for the smallest establishments in the SIC code.

Like generators, blenders do not incur direct costs as a result of the rule. However, they may bear a portion of its impact indirectly as costs are passed through from combustors. A total of 21 small business blenders were identified. Depending on the pass-through assumption, between six and 14 blenders exceed the significant impact threshold. Impacts for some of these facilities were found to represent a significant share of their annual gross sales.

Under the 25 percent price pass-through scenario, the number of blenders exceeding the cost as percentage of sales threshold do not represent a substantial number of facilities, either in absolute number or as a percentage of total blenders. Under the 75 percent scenario, however, the 14 establishments with cost as percentage of sales greater than one percent represent just over 20 percent of the 67 blenders identified for this analysis. In a few cases, the cost as percentage of sales could exceed 10 percent.

E. Key Assumptions and Limitations

This analysis was based on several simplifying assumptions. Four key assumptions may have the most significant impact on findings. First, not all small generators may be captured in our analysis of small business dominated industries. This exclusion may be offset by the fact that some generators who are not small may be incorporated in the small business dominated industries. Second, to calculate the benchmark sales for generators, we used average sales by four-digit SIC code for firms with fewer than 20 employees. This may understate economic impacts for the smallest firms in the industry while overstating impacts for larger firms. Third, compliance costs were assumed to be passed through almost completely to the shipper of the waste. This may overstate the impact on generators and blenders. Finally, we assumed that all waste currently managed by combustion continues to be disposed of in this manner. Impacts on combustors, generators, and blenders may be overstated if waste minimization or other lower cost alternatives are available.

Results from this report should also be evaluated within the context of some key analytical limitations. For example, in recent years there has been significant volatility in market behavior and pricing practices in the hazardous waste combustion industry. Furthermore, combustion prices have experienced a general downward tend since 1985 as a result of overcapacity in the market and slow growth in the generation of hazardous waste. Accounting for this price trend, the increase expected under today's rule may affect generators and blenders less significantly than anticipated. Finally, many hazardous waste generators may be more concerned about other aspects of waste management than with prices.

X. Were Derived Air Quality and Non-Air Impacts Considered?

The final Combustion MACT standards are projected to result in the reallocation and diversion of relatively small amounts of hazardous waste resulting in an unspecified increase in the level of fossil fuel substitution. This substitution with nonhazardous waste fuel sources may result in marginal increases in the annual number of mining and transport injuries, in addition to potential increased emissions of criteria pollutants (SO_x, NO_x, and CO_2). We recognize these

concerns but feel any potential non-air impacts are largely addressed through alternative regulatory or market scenarios. First, some of the hazardous waste reallocated from current combustors will likely be sent to other waste-burning facilities, thereby off-setting primary or supplementary fossil fuel usage. Even if fossil fuel burning does increase to some degree, these SO_2 and NO_x emissions are expected to be regulated under existing standards, *e.g.*, criteria pollutant emissions are currently addressed by the Clean Air Act. Finally, we find that even if fossil fuel use is increased, the risks to miners (primarily coal miners) are voluntary risks. Miners are compensated for these increased risks through wage premiums established in response to market dynamics and recurrent negotiations between union and corporate representatives.

While the primary environmental impact of the MACT standards are improvements in air quality resulting from emissions reductions at combustion facilities, other non-air environmental impacts also result from the rule. Namely, use of some air pollution control equipment and shifts in waste burning result in increased water, solid waste, and energy impacts. We did not assess the monetary costs of these impacts because we expect the incremental costs will be small relative to the total compliance costs of the rule. You are requested to review the Addendum prepared in support of today's final rule for an expanded discussion of these impacts.

XI. The Congressional Review Act (5 U.S.C. 801 et seq., as Added by the Small Business Regulatory Enforcement Fairness Act of 1996)

Is Today's Rule Subject to Congressional Review?

The Congressional Review Act, 5 U.S.C. 801 *et seq.*, as added by the Small Business Regulatory Enforcement Fairness Act of 1996, generally provides that before a rule may take effect, the agency promulgating the rule must submit a rule report, which includes a copy of the rule, to each House of the Congress and to the Comptroller General of the United States. EPA will submit a report containing this rule and other required information to the U.S. Senate, the U.S. House of Representatives, and the Comptroller General of the United States prior to publication of the rule in the **Federal Register**. A Major rule cannot take effect until 60 days after it is published in the **Federal Register**. This action is not a "major rule" as defined by 5 U.S.C. 804(2). This rule will be effective September 30, 1999.

XII. Paperwork Reduction Act (PRA), 5 U.S.C. 3501-3520

How Is the Paperwork Reduction Act Considered in Today's Rule?

The Office of Management and Budget (OMB) has approved the information collection requirements (ICR) contained in this rule under the provisions of the Paperwork Reduction Act, 44 U.S.C. 3501 *et seq.* and has assigned OMB control numbers 2050-0073 ("New and Amended RCRA Reporting and Recordkeeping Requirements for Boilers and Industrial Furnaces Burning Hazardous Waste") for the RCRA provisions and 2060-0349 ("New and Amended Reporting and Recordkeeping Requirements for National Emissions Standards for Hazardous Air Pollutants from Hazardous Waste Combustors") for the CAA provisions.

EPA is required under section 112(d) of the Clean Air Act to regulate emissions of HAPs listed in section 112(b). The requested information is needed as part of the overall compliance and enforcement program. The ICR requires that affected sources retain records of parameter and emissions monitoring data at facilities for a period of five years, which is consistent with the General Provisions to 40 CFR part 63 and the permit requirements under 40 CFR part 70. All sources subject to this rule will be required to obtain operating permits either through the State-approved permitting program or, if one does not exist, in accordance with the provisions of 40 CFR part 71, when promulgated. Section 3007(b) of RCRA and 40 CFR part 2, subpart B, which defines EPA's general policy on the public disclosure of information, contain provisions for confidentiality.

The public reporting burden for this collection of information for the CAA provisions under OMB control number 2060-0349 is estimated to average 297 hours per respondent per year for an estimated 229 respondents. The annual public reporting and record keeping burden for collection of information is estimated to be 67,977 hours and a cost of approximately $1.6 million. The total annualized capital costs and total annualized operation and maintenance costs associated with these requirements are $15,000 and nearly $1.6 million, respectively.

The estimates for RCRA provisions under OMB control number 2050-0073 include an annual public reporting and record keeping burden *reduction* for collection of information of 131,228 hours and a cost burden *reduction* of $4.9 million. The reductions in total annualized capital costs and total annualized operation and maintenance costs associated with these requirements are $2.1 million and $2.8 million, respectively. The negative cost represents the reduced burden on 25 facilities getting out of the hazardous waste combustor universe due to the comparable fuels exemption. A further reduction in this RCRA information collection requirement burden will occur after three years when the combustors will start reporting under the CAA information collection requirements.

Burden means the total time, effort, or financial resources expended by persons to generate, maintain, retain, or disclose or provide information to or for a Federal agency. This includes the time needed to review instructions; develop, acquire, install, and utilize technology and systems for the purposes of collecting, validating, and verifying information, processing and maintaining information, and disclosing and providing information; adjust the existing ways to comply with any previously applicable instructions and requirements; train personnel to be able to respond to a collection of information; search data sources; complete and review the collection of information; and transmit or otherwise disclose the information.

An Agency may not conduct or sponsor, and a person is not required to respond to a collection of information unless it displays a currently valid OMB control number. The OMB control numbers for EPA's regulations are listed in 40 CFR part 9 and 48 CFR Chapter 15. EPA is amending the table in 40 CFR part 9 of currently approved ICR control numbers issued by OMB for various regulations to list the information requirements contained in this final rule.

XIII. National Technology Transfer and Advancement Act of 1995 (Pub L. 104-113, § 12(d) (15 U.S.C. 272 Note)

Was the National Technology Transfer and Advancement Act Considered?

The rulemaking involves technical standards. Therefore, EPA conducted a search to identify potentially applicable voluntary consensus standards (VCS). However, we identified no such standards, and none were brought to our attention in the comments, that would ensure consistency throughout the regulated community. Our response-to-comments document discusses this determination. Therefore, we have decided to use the Air Methods contained in part 60, appendix A.

As noted in the proposed rule, the National Technology Transfer and Advancement Act of 1995 (NTTAA) directs EPA to use voluntary consensus standards in its regulatory activities unless to do so would be inconsistent with applicable law or otherwise impractical. Voluntary consensus standards are technical standards (*e.g.*, materials specifications, test methods, sampling procedures, and business practices) that are developed or adopted by voluntary consensus standards bodies. The NTTAA directs EPA to provide Congress, through OMB, explanations when the Agency decides not to use available and applicable voluntary consensus standards.

In the proposal, we discussed the manual emission test methods that would be required for emission tests and calibration of continuous emission monitors and relied heavily on the BIF methods in 40 CFR part 266, appendix IX. On December 30, 1997, we published a NODA which in part questioned whether the task of determining the appropriate manual method tests to be used for compliance should be simplified. The stack sampling and analysis methods for hazardous waste combustors are under the current BIF and incinerator rules for compliance tests (with a few exceptions) that are located in SW-846. For compliance with the New Source Performance Standard and other air rules, methods are located in 40 CFR part 60, appendix A. Potentially, you could be required to perform two identical tests, one for compliance with MACT or RCRA and one for compliance with other air rules, using identical test methods simply because one method is an "SW-846" method and the other an "air method." Further, the NODA stated that stack test methods hazardous waste combustors use for compliance should be found in one place to facilitate compliance. Therefore, we stated our intention to reference 40 CFR part 60, appendix A (Except for dioxin/furans, where we stated method 0023A of SW-846.), when it requires a specific stack-sampling test method.

Since the time of the proposal, we instituted the "Performance-Based Measurement System." This system identifies performance related criteria that can be used to evaluate alternative methods. Methods determined to contain criteria or are a "Methods-Based Parameters" method are required, and are the only methods that can be used for regulatory tests.

Commenters generally supported use of the Air Methods contained in part 60, appendix A, or their "SW-846" equivalent. Furthermore, because these methods were used to establish the final standards contained in today's rulemaking, application of non approved methods would result in unreliable and inconsistent measurements. Therefore, today's rule will require the use of the Air Methods contained in part 60, appendix A. Section 63.7 describes procedures for the use of alternative test methods for MACT sources. This procedure involves using Method 301 of part 63, appendix A, to validate an alternate test method and submitting the data to us. We then decide if the proposed method is acceptable. Absent this approval under § 63.7 procedures, alternate methods cannot be used.

Today's rule, by requiring the use of only part 60, appendix A methods (method 0023A of SW-846 for dioxin/furans) for compliance determinations and particulate matter continuous emission monitor correlations, would maintain national consistency with the selection of specific manual stack sampling methods. We have determined that this approach would facilitate ease of implementation with today's "self implementing" MACT rule. Again, alternate methods may be approved by the Administrator via the provisions of § 63.7(f) and part § 63, appendix A, Method 301, Field Validation or Pollutant Measurement Methods from Various Waste Media.

XIV. Executive Order 13084: Consultation and Coordination With Indian Tribal Governments (63 FR 27655)

Were Tribal Government Issues Considered?

The requirements of section 3(b) of Executive Order 13084 do not apply to this rule. They apply to rules that are not required by statute, that significantly or uniquely affect the communities of Indian tribal governments, and that impose substantial direct compliance costs on those communities. EPA cannot issue those rules unless the Federal government provides the funds necessary to pay the direct compliance costs incurred by the tribal governments, or EPA consults with those governments and gives required information to OMB. But today's rule does not significantly or uniquely affect the communities of Indian tribal governments.

For many of the same reasons described in the Unfunded Mandates Reform Act discussion (section VI.C above), the requirements of Executive Order 13084 do not apply to today's rule. Promulgation of today's rule is under the statutory authority of the CAA. Also, while Executive Order 13084 does not provide a specific gauge for determining whether a regulation "significantly or uniquely affects" an Indian tribal government, today's rule does not impose substantial direct compliance costs on tribal governments and their communities. Tribal communities are not predominantly located near hazardous waste combustion facilities, when compared with other communities throughout the nation. Finally, tribal governments will not be required to assume any permitting responsibilities associated with this final rule because permitting authority is voluntary for nonfederal government entities.

Shortly after forming the regulatory workgroup for this rulemaking in April 1994, we looked for ways to obtain the input of state, local, and tribal governments into the rulemaking process. As a result, representatives from four State environmental agencies agreed to participate in the workgroup. These representatives were asked to consider the impacts of this rule of the state, local, and tribal level. These representatives served on the workgroup until Final Agency Review in November 1998. As members of the workgroup, they participated in workgroup meetings and conference calls resulting in the development of rulemaking issues and their solutions. They also provided written comments on our work products on several occasions, including the proposal, the May 1997 NODA, and the Final Agency Review package.

In their comments on the proposal and subsequent notices of data availability, these representatives raised concerns over the following issues:

—Use of site-specific risk assessments under RCRA
—Continuous emissions monitors
—Manual sampling methods
—Compliance schedule
—Use of test data to establish operating limits
—Automatic waste feed cutoffs
—Performance testing schedule
—Recordkeeping requirements
—Permitting issues
—Assessment of potential costs and benefits
—Human health benefits
—Area sources
—Notification and reporting requirements
—Protectiveness of human health as required by RCRA
—Redundant requirements
—State authorization
—Public participation
—CAAA and RCRA coordination

—Adequate public comment
—Implementation flexibility
—Allocation of grants
—And many other technical issues

We addressed the issues raised by these four representatives to the fullest extent possible in today's rule. The comments received from these representatives are included in the rulemaking docket, together with all other comments received. We highlighted and addressed some of these comments in today's preamble. We responded to all comments in the Response to Comments document, which has been made available to the Office of Management and Budget and is available in the docket for today's rule.

Part Nine: Technical Amendments to Previous Regulations

I. Changes to the June 19, 1998 "Fast-Track" Rule

A. Permit Streamlining Section

Today's regulations correct a typographical error to § 270.42 Appendix I entry L(9) promulgated in the Fast-track rule. Entry L(9) incorrectly cited § 270.42(i), whereas today's regulations correctly amends entry L(9) to cite § 270.42(j).

B. Comparable Fuels Section

In the June 19th rule, we explained that our methodology for identifying the comparable fuels specifications was to select the highest benchmark fuel value in our data base for each constituent (see 63 FR at 33786). However, the results reported in the final rule—Table 1 to § 261.38—do not consistently follow our methodology. In several instances, the highest value was not presented in the table, as pointed out by commenters to the final rule. Therefore, in today's rule, we are amending the comparable fuels portion of the Fast-track rule to make necessary conforming changes to the comparable fuels specifications as listed in Table 1 of § 261.38—Detection and Detection Limit Values for Comparable Fuel Specifications. Please see the USEPA, "Final Technical Support Document for HWC MACT Standards, Volume 4" July 1999, for a detailed discussion of the changes to Table 1.

In addition, because these are technical corrections (i.e. corrections where we made arithmetic or other inadvertent mistakes in applying our stated methodology for calculating the comparative fuel levels) we find that giving notice and opportunity for public comment is unnecessary within the meaning of 5 U.S.C. 553 (b) (B). In fact, the errors were brought to our attention by an entity that applied the stated methodology and derived the correct values which we are restoring in this amendment. (We did, however, provide actual notice of these intended corrections to entities we believed most interested in the issue, so that these entities did have an opportunity for comment to us.) For the same reasons, we find that there is good cause for the rule to take effect immediately, rather than wait 30 days. See 5 U.S.C. 553 (d) (3). Finally, since notice and comment is unnecessary, this correction is not a "rule" for purposes of the Regulatory Flexibility Act (see 5 U.S.C. 601 (2)), and may take effect immediately before submission to Congress for review (see 5 U.S.C. 808 (2)).

List of Subjects

40 CFR Part 60

Environmental protection, Administrative practice and procedure, Air pollution control, Aluminum, Ammonium sulfate plants, Batteries, Beverages, Carbon monoxide, Cement industry, Coal, Copper, Dry cleaners, Electric power plants, Fertilizers, Fluoride, Gasoline, Glass and glass products, Grains, Graphic arts industry, Heaters, Household appliances, Insulation, Intergovernmental relations, Iron, Labeling, Lead, Lime, Metallic and nonmetallic mineral processing plants, Metals, Motor vehicles, Natural gas, Nitric acid plants, Nitrogen dioxide, Paper and paper products industry, Particulate matter, Paving and roofing materials, Petroleum, Phosphate, Plastics materials and synthetics, Polymers, Reporting and recordkeeping requirements, Sewage disposal, Steel, Sulfur oxides, Sulfuric acid plants, Tires, Urethane, Vinyl, Volatile organic compounds, Waste treatment and disposal, Zinc.

40 CFR Part 63

Air pollution control, Hazardous substances, Incorporation by Reference, Reporting and recordkeeping requirements

40 CFR Part 260

Administrative practice and procedure, Confidential business information, Environmental protection, Hazardous waste.

40 CFR Part 261

Environmental Protection Hazardous waste, Recycling, Reporting and recordkeeping requirements.

40 CFR Part 264

Air pollution control, Environmental protection, Hazardous waste, Insurance, Packaging and containers, Reporting and recordkeeping requirements, Security measures, Surety bonds.

40 CFR Part 265

Air pollution control, Environmental protection, Hazardous waste, Insurance, Packaging and containers, Reporting and recordkeeping requirements, Security measures, Surety bonds, Water supply.

40 CFR Part 266

Environmental protection, Energy, Hazardous waste, Recycling, Reporting and recordkeeping requirements.

40 CFR Part 270

Administrative practice and procedure, Confidential business information, Environmental Protection Agency, Hazardous materials transportation, Hazardous waste, Reporting and recordkeeping requirements, Water pollution control, Water supply.

40 CFR Part 271

Administrative practice and procedure, Confidential business information, Environmental Protection Agency, Hazardous materials transportation, Hazardous waste, Indians-lands, Intergovernmental relations, Penalties, Reporting and recordkeeping requirements, Water pollution control, Water supply.

Dated: July 30, 1999.

Carol M. Browner,

Administrator.

For the reasons set out in the preamble, title 40 of the Code of Federal Regulations is amended as follows:

PART 60—STANDARDS OF PERFORMANCE FOR NEW STATIONARY SOURCES

1. The authority citation for part 60 continues to read as follows:

Authority: 42 U.S.C. 7401–7601.

2. Appendix A to part 60 is amended by adding a new entry for "Method 5I" in numerical order to read as follows:

Appendix A—Test Methods

* * * * *

Method 5I—Determination of Low Level Particulate Matter Emissions From Stationary Sources

Note: This method does not include all of the specifications (*e.g.*, equipment and supplies) and procedures (*e.g.*, sampling and analytical) essential to its performance. Certain information is contained in other EPA procedures found in this part. Therefore, to obtain reliable results, persons using this method should have experience with and a thorough knowledge of the following Methods: Methods 1, 2, 3, 4 and 5.

1. *Scope and Application.*

1.1 Analyte. Particulate matter (PM). No CAS number assigned.

1.2 Applicability. This method is applicable for the determination of low level particulate matter (PM) emissions from stationary sources. The method is most effective for total PM catches of 50 mg or less. This method was initially developed for performing correlation of manual PM measurements to PM continuous emission monitoring systems (CEMS), however it is also useful for other low particulate concentration applications.

1.3 Data Quality Objectives. Adherence to the requirements of this method will enhance the quality of the data obtained from air pollutant sampling methods. Method 5I requires the use of paired trains. Acceptance criteria for the identification of data quality outliers from the paired trains are provided in Section 12.2 of this Method.

2. *Summary of Method.*

2.1. Description. The system setup and operation is essentially identical to Method 5. Particulate is withdrawn isokinetically from the source and collected on a 47 mm glass fiber filter maintained at a temperature of 120 ± 14°C (248 ± 25°F). The PM mass is determined by gravimetric analysis after the removal of uncombined water. Specific measures in this procedure designed to improve system performance at low particulate levels include:

1. Improved sample handling procedures
2 Light weight sample filter assembly
3. Use of low residue grade acetone

Accuracy is improved through the minimization of systemic errors associated with sample handling and weighing procedures. High purity reagents, all glass, grease free, sample train components, and light weight filter assemblies and beakers, each contribute to the overall objective of improved precision and accuracy at low particulate concentrations.

2.2 Paired Trains. This method must be performed using a paired train configuration. These trains may be operated as co-located trains (to trains operating collecting from one port) or as simultaneous trains (separate trains operating from different ports at the same time). Procedures for calculating precision of the paired trains are provided in Section 12.

2.3 Detection Limit. a. Typical detection limit for manual particulate testing is 0.5 mg. This mass is also cited as the accepted weight variability limit in determination of "constant weight" as cited in Section 8.1.2 of this Method. EPA has performed studies to provide guidance on minimum PM catch. The minimum detection limit (MDL) is the minimum concentration or amount of an analyte that can be determined with a specified degree of confidence to be different from zero. We have defined the minimum or target catch as a concentration or amount sufficiently larger than the MDL to ensure that the results are reliable and repeatable. The particulate matter catch is the product of the average particulate matter concentration on a mass per volume basis and the volume of gas collected by the sample train. The tester can generally control the volume of gas collected by increasing the sampling time or to a lesser extent by increasing the rate at which sample is collected. If the tester has a reasonable estimate of the PM concentration from the source, the tester can ensure that the target catch is collected by sampling the appropriate gas volume.

b. However, if the source has a very low particulate matter concentration in the stack, the volume of gas sampled may need to be very large which leads to unacceptably long sampling times. When determining compliance with an emission limit, EPA guidance has been that the tester does not always have to collect the target catch. Instead, we have suggested that the tester sample enough stack gas, that if the source were exactly at the level of the emission standard, the sample catch would equal the target catch. Thus, if at the end of the test the catch were smaller than the target, we could still conclude that the source is in compliance though we might not know the exact emission level. This volume of gas becomes a target volume that can be translated into a target sampling time by assuming an average sampling rate. Because the MDL forms the basis for our guidance on target sampling times, EPA has conducted a systematic laboratory study to define what is the MDL for Method 5 and determined the Method to have a calculated practical quantitation limit (PQL) of 3 mg of PM and an MDL of 1 mg.

c. Based on these results, the EPA has concluded that for PM testing, the target catch must be no less than 3 mg. Those sample catches between 1 mg and 3 mg are between the detection limit and the limit of quantitation. If a tester uses the target catch to estimate a target sampling time that results in sample catches that are less than 3 mg, you should not automatically reject the results. If the tester calculated the target sampling time as described above by assuming that the source was at the level of the emission limit, the results would still be valid for determining that the source was in compliance. For purposes other than determining compliance, results should be divided into two categories—those that fall between 3 mg and 1 mg and those that are below 1 mg. A sample catch between 1 and 3 mg may be used for such purposes as calculating emission rates with the understanding that the resulting emission rates can have a high degree of uncertainty. Results of less than 1 mg should not be used for calculating emission rates or pollutant concentrations.

d. When collecting small catches such as 3 mg, bias becomes an important issue. Source testers must use extreme caution to reach the PQL of 3 mg by assuring that sampling probes are very clean (perhaps confirmed by low blank weights) before use in the field. They should also use low tare weight sample containers, and establish a well-controlled balance room to weigh the samples.

3. *Definitions.*

3.1 *Light Weight Filter Housing.* A smaller housing that allows the entire filtering system to be weighed before and after sample collection. (See. 6.1.3)

3.2 *Paired Train.* Sample systems trains may be operated as co-located trains (two sample probes attached to each other in the same port) or as simultaneous trains (two separate trains operating from different ports at the same time).

4. *Interferences.*

a. There are numerous potential interferents that may be encountered during performance of Method 5I sampling and analyses. This Method should be considered more sensitive to the normal interferents typically encountered during particulate testing because of the low level concentrations of the flue gas stream being sampled.

b. Care must be taken to minimize field contamination, especially to the filter housing since the entire unit is weighed (not just the filter media). Care must also be taken to ensure that no sample is lost during the sampling process (such as during port changes, removal of the filter assemblies from the probes, etc.).

c. Balance room conditions are a source of concern for analysis of the low level samples. Relative humidity, ambient temperatures variations, air draft, vibrations and even barometric pressure can affect consistent reproducible measurements of the sample media. Ideally, the same analyst who performs the tare weights should perform the final weights to minimize the effects of procedural differences specific to the analysts.

d. Attention must also be provided to weighing artifacts caused by electrostatic charges which may have to be discharged or neutralized prior to sample analysis. Static charge can affect consistent and reliable gravimetric readings in low humidity environments. Method 5I recommends a relative humidity of less than 50 percent in the weighing room environment used for sample analyses. However, lower humidity may be encountered or required to address sample precision problems. Low humidity conditions can increase the effects of static charge.

e. Other interferences associated with typical Method 5 testing (sulfates, acid gases, etc.) are also applicable to Method 5I.

5. *Safety.*

Disclaimer. This method may involve hazardous materials, operations, and equipment. This test method may not address all of the safety concerns associated with its use. It is the responsibility of the user to establish appropriate safety and health practices and to determine the applicability and observe all regulatory limitations before using this method.

6. *Equipment and Supplies.*

6.1 Sample Collection Equipment and Supplies. The sample train is nearly identical in configuration to the train depicted in Figure 5-1 of Method 5. The primary difference in the sample trains is the lightweight Method 5I filter assembly that attaches directly to the exit to the probe. Other exceptions and additions specific to Method 5I include:

6.1.1 Probe Nozzle. Same as Method 5, with the exception that it must be constructed of borosilicate or quartz glass tubing.

6.1.2 Probe Liner. Same as Method 5, with the exception that it must be

constructed of borosilicate or quartz glass tubing.

6.1.3 Filter Holder. The filter holder is constructed of borosilicate or quartz glass front cover designed to hold a 47-mm glass fiber filter, with a wafer thin stainless steel (SS) filter support, a silicone rubber or Viton O-ring, and Teflon tape seal. This holder design will provide a positive seal against leakage from the outside or around the filter. The filter holder assembly fits into a SS filter holder and attaches directly to the outlet of the probe. The tare weight of the filter, borosilicate or quartz glass holder, SS filter support, O-ring and Teflon tape seal generally will not exceed approximately 35 grams. The filter holder is designed to use a 47-mm glass fiber filter meeting the quality criteria in of Method 5. These units are commercially available from several source testing equipment vendors. Once the filter holder has been assembled, desiccated and tared, protect it from external sources of contamination by covering the front socket with a ground glass plug. Secure the plug with an impinger clamp or other item that will ensure a leak-free fitting.

6.2 Sample Recovery Equipment and Supplies. Same as Method 5, with the following exceptions:

6.2.1 Probe-Liner and Probe-Nozzle Brushes. Teflon® or nylon bristle brushes with stainless steel wire handles, should be used to clean the probe. The probe brush must have extensions (at least as long as the probe) of Teflon, nylon or similarly inert material. The brushes must be properly sized and shaped for brushing out the probe liner and nozzle.

6.2.2 Wash Bottles. Two Teflon wash bottles are recommended however, polyethylene wash bottles may be used at the option of the tester. Acetone should not be stored in polyethylene bottles for longer than one month.

6.2.3 Filter Assembly Transport. A system should be employed to minimize contamination of the filter assemblies during transport to and from the field test location. A carrying case or packet with clean compartments of sufficient size to accommodate each filter assembly can be used. This system should have an air tight seal to further minimize contamination during transport to and from the field.

6.3 Analysis Equipment and Supplies. Same as Method 5, with the following exception:

6.3.1 Lightweight Beaker Liner. Teflon or other lightweight beaker liners are used for the analysis of the probe and nozzle rinses. These light weight liners are used in place of the borosilicate glass beakers typically used for the Method 5 weighings in order to improve sample analytical precision.

6.3.2 Anti-static Treatment. Commercially available gaseous anti-static rinses are recommended for low humidity situations that contribute to static charge problems.

7. *Reagents and Standards.*

7.1 Sampling Reagents. The reagents used in sampling are the same as Method 5 with the following exceptions:

7.1.1 Filters. The quality specifications for the filters are identical to those cited for Method 5. The only difference is the filter diameter of 47 millimeters.

7.1.2 Stopcock Grease. Stopcock grease cannot be used with this sampling train. We recommend that the sampling train be assembled with glass joints containing O-ring seals or screw-on connectors, or similar.

7.1.3 Acetone. Low residue type acetone, ≤0.001 percent residue, purchased in glass bottles is used for the recovery of particulate matter from the probe and nozzle. Acetone from metal containers generally has a high residue blank and should not be used. Sometimes, suppliers transfer acetone to glass bottles from metal containers; thus, acetone blanks must be run prior to field use and only acetone with low blank values (≤0.001 percent residue, as specified by the manufacturer) must be used. Acetone blank correction is not allowed for this method; therefore, it is critical that high purity reagents be purchased and verified prior to use.

7.1.4 Gloves. Disposable, powder-free, latex surgical gloves, or their equivalent are used at all times when handling the filter housings or performing sample recovery.

7.2 Standards. There are no applicable standards or audit samples commercially available for Method 5I analyses.

8. *Sample Collection, Preservation, Storage, and Transport.*

8.1 Pretest Preparation. Same as Method 5 with several exceptions specific to filter assembly and weighing.

8.1.1 Filter Assembly. Uniquely identify each filter support before loading filters into the holder assembly. This can be done with an engraving tool or a permanent marker. Use powder free latex surgical gloves whenever handling the filter holder assemblies. Place the O-ring on the back of the filter housing in the O-ring groove. Place a 47 mm glass fiber filter on the O-ring with the face down. Place a stainless steel filter holder against the back of the filter. Carefully wrap 5 mm (¼ inch) wide Teflon™ tape one timearound the outside of the filter holder overlapping the stainless steel filter support by approximately 2.5 mm (⅛ inch). Gently brush the Teflon tape down on the back of the stainless steel filter support. Store the filter assemblies in their transport case until time for weighing or field use.

8.1.2 Filter Weighing Procedures. a. Desiccate the entire filter holder assemblies at 20 ± 5.6°C (68 ± 10°F) and ambient pressure for at least 24 hours. Weigh at intervals of at least 6 hours to a constant weight, *i.e.*, 0.5 mg change from previous weighing. Record the results to the nearest 0.1 mg. During each weighing, the filter holder assemblies must not be exposed to the laboratory atmosphere for a period greater than 2 minutes and a relative humidity above 50 percent. Lower relative humidity may be required in order to improve analytical precision. However, low humidity conditions increase static charge to the sample media.

b. Alternatively (unless otherwise specified by the Administrator), the filters holder assemblies may be oven dried at 105°C (220°F) for a minimum of 2 hours, desiccated for 2 hours, and weighed. The procedure used for the tare weigh must also be used for the final weight determination.

c. Experience has shown that weighing uncertainties are not only related to the balance performance but to the entire weighing procedure. Therefore, before performing any measurement, establish and follow standard operating procedures, taking into account the sampling equipment and filters to be used.

8.2 Preliminary Determinations. Select the sampling site, traverse points, probe nozzle, and probe length as specified in Method 5.

8.3 Preparation of Sampling Train. Same as Method 5, Section 8.3, with the following exception: During preparation and assembly of the sampling train, keep all openings where contamination can occur covered until justbefore assembly or until sampling is about to begin. Using gloves, place a labeled (identified) and weighed filter holder assembly into the stainless steel holder. Then place this whole unit in the Method 5 hot box, and attach it to the probe. Do not use stopcock grease.

8.4 Leak-Check Procedures. Same as Method 5.

8.5 Sampling Train Operation.

8.5.1. Operation. Operate the sampling train in a manner consistent with those described in Methods 1, 2, 4 and 5 in terms of the number of sample points and minimum time per point. The sample rate and total gas volume should be adjusted based on estimated grain loading of the source being characterized. The total sampling time must be a function of the estimated mass of particulate to be collected for the run. Targeted mass to be collected in a typical Method 5I sample train should be on the order of 10 to 20 mg. Method 5I is most appropriate for total collected masses of less than 50 milligrams, however, there is not an exact particulate loading cutoff, and it is likely that some runs may exceed 50 mg. Exceeding 50 mg (or less than 10 mg) for the sample mass does not necessarily justify invalidating a sample run if all other Method criteria are met.

8.5.2 Paired Train. This Method requires PM samples be collected with paired trains.

8.5.2.1 It is important that the systems be operated truly simultaneously. This implies that both sample systems start and stop at the same times. This also means that if one sample system is stopped during the run, the other sample systems must also be stopped until the cause has been corrected.

8.5.2.2 Care should be taken to maintain the filter box temperature of the paired trains as close as possible to the Method required temperature of 120 ± 14°C (248 ± 25°F). If separate ovens are being used for simultaneously operated trains, it is recommended that the oven temperature of each train be maintained within ± 14°C (± 25°F) of each other.

8.5.2.3 The nozzles for paired trains need not be identically sized.

8.5.2.4 Co-located sample nozzles must be within the same plane perpendicular to the gas flow. Co-located nozzles and pitot assemblies should be within a 6.0 cm × 6.0 cm square (as cited for a quadruple train in Reference Method 301).

8.5.3 Duplicate gas samples for molecular weight determination need not be collected.

8.6 Sample Recovery. Same as Method 5 with several exceptions specific to the filter housing.

8.6.1 Before moving the sampling train to the cleanup site, remove the probe from the train and seal the nozzle inlet and outlet of the probe. Be careful not to lose any condensate that might be present. Cap the filter inlet using a standard ground glass plug and secure the cap with an impinger clamp. Remove the umbilical cord from the last impinger and cap the impinger. If a flexible line is used between the first impinger condenser and the filter holder, disconnect the line at the filter holder and let any condensed water or liquid drain into the impingers or condenser.

8.6.2 Transfer the probe and filter-impinger assembly to the cleanup area. This area must be clean and protected from the wind so that the possibility of losing any of the sample will be minimized.

8.6.3 Inspect the train prior to and during disassembly and note any abnormal conditions such as particulate color, filter loading, impinger liquid color, etc.

8.6.4 Container No. 1, Filter Assembly. Carefully remove the cooled filter holder assembly from the Method 5 hot box and place it in the transport case. Use a pair of clean gloves to handle the filter holder assembly.

8.6.5 Container No. 2, Probe Nozzle and Probe Liner Rinse. Rinse the probe and nozzle components with acetone. Be certain that the probe and nozzle brushes have been thoroughly rinsed prior to use as they can be a source of contamination.

8.6.6 All Other Train Components. (Impingers) Same as Method 5.

8.7 Sample Storage and Transport. Whenever possible, containers should be shipped in such a way that they remain upright at all times. All appropriate dangerous goods shipping requirements must be observed since acetone is a flammable liquid.

9. *Quality Control.*

9.1 Miscellaneous Field Quality Control Measures.

9.1.1 A quality control (QC) check of the volume metering system at the field site is suggested before collecting the sample using the procedures in Method 5, Section 4.4.1.

9.1.2 All other quality control checks outlined in Methods 1, 2, 4 and 5 also apply to Method 5I. This includes procedures such as leak-checks, equipment calibration checks, and independent checks of field data sheets for reasonableness and completeness.

9.2 Quality Control Samples.

9.2.1 Required QC Sample. A laboratory reagent blank must be collected and analyzed for each lot of acetone used for a field program to confirm that it is of suitable purity. The particulate samples cannot be blank corrected.

9.2.2 Recommended QC Samples. These samples may be collected and archived for future analyses.

9.2.2.1 A field reagent blank is a recommended QC sample collected from a portion of the acetone used for cleanup of the probe and nozzle. Take 100 ml of this acetone directly from the wash bottle being used and place it in a glass sample container labeled "field acetone reagent blank." At least one field reagent blank is recommended for every five runs completed. The field reagent blank samples demonstrate the purity of the acetone was maintained throughout the program.

9.2.2.2 A field bias blank train is a recommended QC sample. This sample is collected by recovering a probe and filter assembly that has been assembled, taken to the sample location, leak checked, heated, allowed to sit at the sample location for a similar duration of time as a regular sample run, leak-checked again, and then recovered in the same manner as a regular sample. Field bias blanks are not a Method requirement, however, they are recommended and are very useful for identifying sources of contamination in emission testing samples. Field bias blank train results greater than 5 times the method detection limit may be considered problematic.

10. *Calibration and Standardization* Same as Method 5, Section 5.

11. *Analytical Procedures.*

11.1 Analysis. Same as Method 5, Sections 11.1—11.2.4, with the following exceptions:

11.1.1 Container No. 1. Same as Method 5, Section 11.2.1, with the following exception: Use disposable gloves to remove each of the filter holder assemblies from the desiccator, transport container, or sample oven (after appropriate cooling).

11.1.2 Container No. 2. Same as Method 5, Section 11.2.2, with the following exception: It is recommended that the contents of Container No. 2 be transferred to a 250 ml beaker with a Teflon liner or similar container that has a minimal tare weight before bringing to dryness.

12. *Data Analysis and Calculations.*

12.1 Particulate Emissions. The analytical results cannot be blank corrected for residual acetone found in any of the blanks. All other sample calculations are identical to Method 5.

12.2 Paired Trains Outliers. a. Outliers are identified through the determination of precision and any systemic bias of the paired trains. Data that do not meet this criteria should be flagged as a data quality problem. The primary reason for performing dual train sampling is to generate information to quantify the precision of the Reference Method data. The relative standard deviation (RSD) of paired data is the parameter used to quantify data precision. RSD for two simultaneously gathered data points is determined according to:

$$RSD = 100\% * \left|(C_a - C_b)\right| / (C_a + C_b)$$

where, Ca and Cb are concentration values determined from trains A and B respectively. For RSD calculation, the concentration units are unimportant so long as they are consistent.

b. A minimum precision criteria for Reference Method PM data is that RSD for any data pair must be less than 10% as long as the mean PM concentration is greater than 10 mg/unit volume. If the mean PM concentration is less than 10 mg/unit volume higher RSD values are acceptable. At mean PM concentration of 1 mg/unit volume acceptable RSD for paired trains is 25%. Between 1 and 10 mg/unit volume acceptable RSD criteria should be linearly scaled from 25% to 10%. Pairs of manual method data exceeding these RSD criteria should be eliminated from the data set used to develop a PM CEMS correlation or to assess RCA.

13. *Method Performance. [Reserved]*

14. *Pollution Prevention. [Reserved]*

15. *Waste Management. [Reserved]*

16. *Alternative Procedures.* Same as Method 5.

17. *Bibliography.* Same as Method 5.

18. *Tables, Diagrams, Flowcharts and Validation Data.* Figure 5I-1 is a schematic of the sample train.

BILLING CODE 6560-50-P

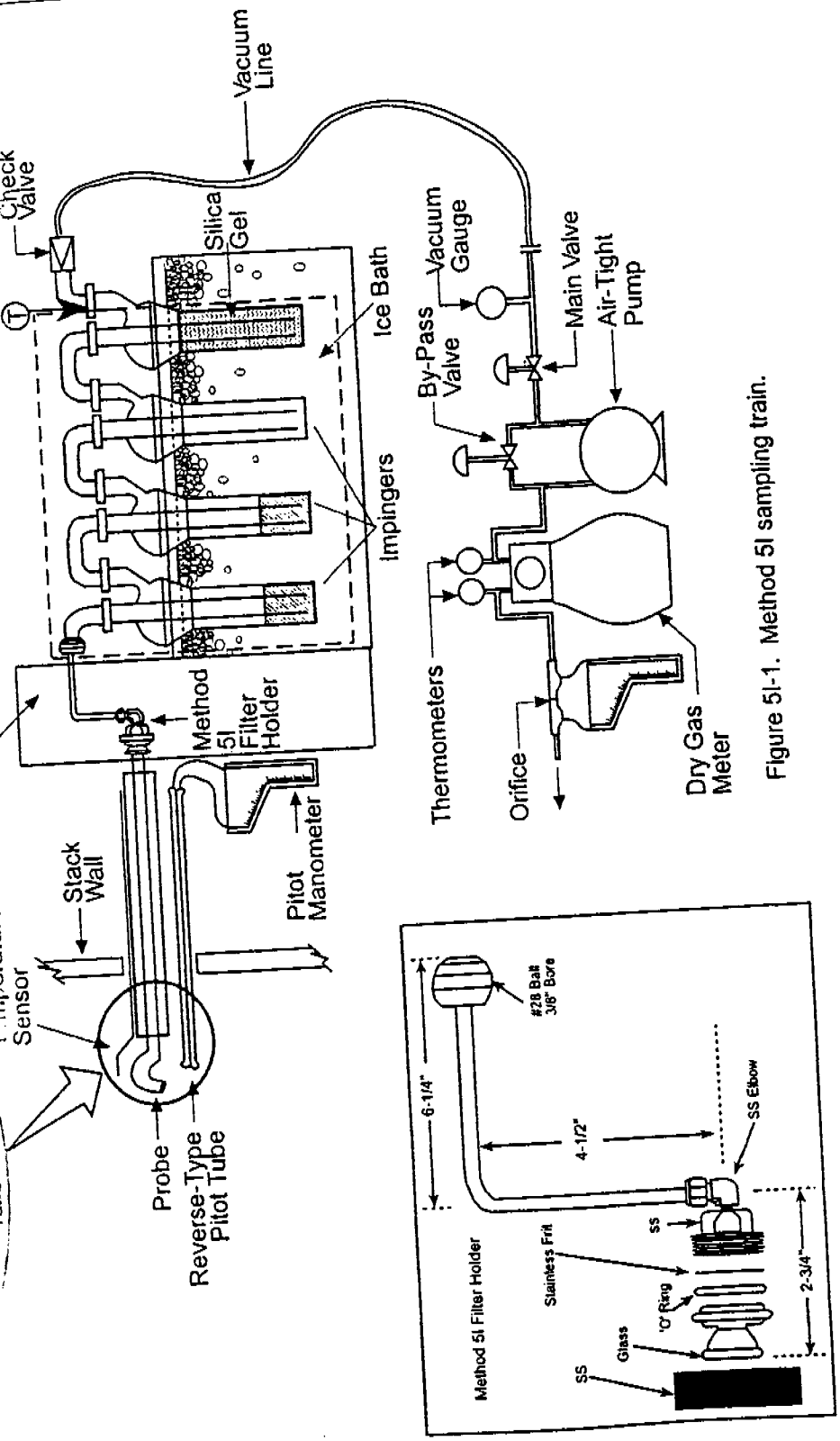

Figure 5I-1. Method 5I sampling train.

3. Appendix B to part 60 is amended by adding Performance Specifications 4B and 8A in numerical order to read as follows:

Appendix B—Performance Specifications

* * * * *

Performance Specification 4B—-Specifications and test procedures for carbon monoxide and oxygen continuous monitoring systems in stationary sources

a. Applicability and Principle

1.1 Applicability. a. This specification is to be used for evaluating the acceptability of carbon monoxide (CO) and oxygen (O_2) continuous emission monitoring systems (CEMS) at the time of or soon after installation and whenever specified in the regulations. The CEMS may include, for certain stationary sources, (a) flow monitoring equipment to allow measurement of the dry volume of stack effluent sampled, and (b) an automatic sampling system.

b. This specification is not designed to evaluate the installed CEMS' performance over an extended period of time nor does it identify specific calibration techniques and auxiliary procedures to assess the CEMS' performance. The source owner or operator, however, is responsible to properly calibrate, maintain, and operate the CEMS. To evaluate the CEMS' performance, the Administrator may require, under section 114 of the Act, the operator to conduct CEMS performance evaluations at times other than the initial test.

c. The definitions, installation and measurement location specifications, test procedures, data reduction procedures, reporting requirements, and bibliography are the same as in PS 3 (for O_2) and PS 4A (for CO) except as otherwise noted below.

1.2 Principle. Installation and measurement location specifications, performance specifications, test procedures, and data reduction procedures are included in this specification. Reference method tests, calibration error tests, calibration drift tests, and interferant tests are conducted to determine conformance of the CEMS with the specification.

b. Definitions

2.1 *Continuous Emission Monitoring System (CEMS).* This definition is the same as PS 2 Section 2.1 with the following addition. A continuous monitor is one in which the sample to be analyzed passes the measurement section of the analyzer without interruption.

2.2 *Response Time.* The time interval between the start of a step change in the system input and when the pollutant analyzer output reaches 95 percent of the final value.

2.3 *Calibration Error (CE).* The difference between the concentration indicated by the CEMS and the known concentration generated by a calibration source when the entire CEMS, including the sampling interface is challenged. A CE test procedure is performed to document the accuracy and linearity of the CEMS over the entire measurement range.

3. Installation and Measurement Location Specifications

3.1 *The CEMS Installation and Measurement Location.* This specification is the same as PS 2 Section 3.1 with the following additions. Both the CO and O_2 monitors should be installed at the same general location. If this is not possible, they may be installed at different locations if the effluent gases at both sample locations are not stratified and there is no in-leakage of air between sampling locations.

3.1.1 *Measurement Location.* Same as PS 2 Section 3.1.1.

3.1.2 *Point CEMS.* The measurement point should be within or centrally located over the centroidal area of the stack or duct cross section.

3.1.3 *Path CEMS.* The effective measurement path should: (1) Have at least 70 percent of the path within the inner 50 percent of the stack or duct cross sectional area, or (2) be centrally located over any part of the centroidal area.

3.2 *Reference Method (RM) Measurement Location and Traverse Points.* This specification is the same as PS 2 Section 3.2 with the following additions. When pollutant concentration changes are due solely to diluent leakage and CO and O_2 are simultaneously measured at the same location, one half diameter may be used in place of two equivalent diameters.

3.3 *Stratification Test Procedure.* Stratification is defined as the difference in excess of 10 percent between the average concentration in the duct or stack and the concentration at any point more than 1.0 meter from the duct or stack wall. To determine whether effluent stratification exists, a dual probe system should be used to determine the average effluent concentration while measurements at each traverse point are being made. One probe, located at the stack or duct centroid, is used as a stationary reference point to indicate change in the effluent concentration over time. The second probe is used for sampling at the traverse points specified in Method 1 (40 CFR part 60 appendix A). The monitoring system samples sequentially at the reference and traverse points throughout the testing period for five minutes at each point.

d. Performance and Equipment Specifications

4.1 Data Recorder Scale. For O_2, same as specified in PS 3, except that the span must be 25 percent. The span of the O_2 may be higher if the O_2 concentration at the sampling point can be greater than 25 percent. For CO, same as specified in PS 4A, except that the low-range span must be 200 ppm and the high range span must be 3000 ppm. In addition, the scale for both CEMS must record all readings within a measurement range with a resolution of 0.5 percent.

4.2 *Calibration Drift.* For O_2, same as specified in PS 3. For CO, the same as specified in PS 4A except that the CEMS calibration must not drift from the reference value of the calibration standard by more than 3 percent of the span value on either the high or low range.

4.3 *Relative Accuracy (RA).* For O_2, same as specified in PS 3. For CO, the same as specified in PS 4A.

4.4 *Calibration Error (CE).* The mean difference between the CEMS and reference values at all three test points (see Table I) must be no greater than 5 percent of span value for CO monitors and 0.5 percent for O_2 monitors.

4.5 *Response Time.* The response time for the CO or O_2 monitor must not exceed 2 minutes.

e. Performance Specification Test Procedure

5.1 *Calibration Error Test and Response Time Test Periods.* Conduct the CE and response time tests during the CD test period.

F. The CEMS Calibration Drift and Response Time Test Procedures

The response time test procedure is given in PS 4A, and must be carried out for both the CO and O_2 monitors.

7. Relative Accuracy and Calibration Error Test Procedures

7.1 *Calibration Error Test Procedure.* Challenge each monitor (both low and high range CO and O_2) with zero gas and EPA Protocol 1 cylinder gases at three measurement points within the ranges specified in Table I.

TABLE I. CALIBRATION ERROR CONCENTRATION RANGES

Measurement point	CO Low range (ppm)	CO High range (ppm)	O_2 (%)
1	0–40	0–600	0–2
2	60–80	900–1200	8–10
3	140–160	2100–2400	14–16

Operate each monitor in its normal sampling mode as nearly as possible. The calibration gas must be injected into the sample system as close to the sampling probe outlet as practical and should pass through all CEMS components used during normal sampling. Challenge the CEMS three non-consecutive times at each measurement point and record the responses. The duration of each gas

injection should be sufficient to ensure that the CEMS surfaces are conditioned.

7.1.1 *Calculations.* Summarize the results on a data sheet. Average the differences between the instrument response and the certified cylinder gas value for each gas. Calculate the CE results according to:

$$CE = |d/FS| \times 100 \qquad (1)$$

where *d* is the mean difference between the CEMS response and the known reference concentration and *FS* is the span value.

7.2 *Relative Accuracy Test Procedure.* Follow the RA test procedures in PS 3 (for O_2) section 3 and PS 4A (for CO) section 4.

7.3 *Alternative RA Procedure.* Under some operating conditions, it may not be possible to obtain meaningful results using the RA test procedure. This includes conditions where consistent, very low CO emission or low CO emissions interrupted periodically by short duration, high level spikes are observed. It may be appropriate in these circumstances to waive the RA test and substitute the following procedure.

Conduct a complete CEMS status check following the manufacturer's written instructions. The check should include operation of the light source, signal receiver, timing mechanism functions, data acquisition and data reduction functions, data recorders, mechanically operated functions, sample filters, sample line heaters, moisture traps, and other related functions of the CEMS, as applicable. All parts of the CEMS must be functioning properly before the RA requirement can be waived. The instrument must also successfully passed the CE and CD specifications. Substitution of the alternate procedure requires approval of the Regional Administrator.

8. Bibliography

1. 40 CFR Part 266, Appendix IX, Section 2, "Performance Specifications for Continuous Emission Monitoring Systems."

* * * * *

Performance Specification 8A—Specifications and test procedures for total hydrocarbon continuous monitoring systems in stationary sources

1. Applicability and Principle

1.1 *Applicability.* These performance specifications apply to hydrocarbon (HC) continuous emission monitoring systems (CEMS) installed on stationary sources. The specifications include procedures which are intended to be used to evaluate the acceptability of the CEMS at the time of its installation or whenever specified in regulations or permits. The procedures are not designed to evaluate CEMS performance over an extended period of time. The source owner or operator is responsible for the proper calibration, maintenance, and operation of the CEMS at all times.

1.2 *Principle.* A gas sample is extracted from the source through a heated sample line and heated filter to a flame ionization detector (FID). Results are reported as volume concentration equivalents of propane. Installation and measurement location specifications, performance and equipment specifications, test and data reduction procedures, and brief quality assurance guidelines are included in the specifications. Calibration drift, calibration error, and response time tests are conducted to determine conformance of the CEMS with the specifications.

2. Definitions

2.1 *Continuous Emission Monitoring System (CEMS).* The total equipment used to acquire data, which includes sample extraction and transport hardware, analyzer, data recording and processing hardware, and software. The system consists of the following major subsystems:

2.1.1 *Sample Interface.* That portion of the system that is used for one or more of the following: Sample acquisition, sample transportation, sample conditioning, or protection of the analyzer from the effects of the stack effluent.

2.1.2 *Organic Analyzer.* That portion of the system that senses organic concentration and generates an output proportional to the gas concentration.

2.1.3 *Data Recorder.* That portion of the system that records a permanent record of the measurement values. The data recorder may include automatic data reduction capabilities.

2.2 *Instrument Measurement Range.* The difference between the minimum and maximum concentration that can be measured by a specific instrument. The minimum is often stated or assumed to be zero and the range expressed only as the maximum.

2.3 *Span or Span Value.* Full scale instrument measurement range. The span value must be documented by the CEMS manufacturer with laboratory data.

2.4 *Calibration Gas.* A known concentration of a gas in an appropriate diluent gas.

2.5 *Calibration Drift (CD).* The difference in the CEMS output readings from the established reference value after a stated period of operation during which no unscheduled maintenance, repair, or adjustment takes place. A CD test is performed to demonstrate the stability of the CEMS calibration over time.

2.6 *Response Time.* The time interval between the start of a step change in the system input (e.g., change of calibration gas) and the time when the data recorder displays 95 percent of the final value.

2.7 *Accuracy.* A measurement of agreement between a measured value and an accepted or true value, expressed as the percentage difference between the true and measured values relative to the true value. For these performance specifications, accuracy is checked by conducting a calibration error (CE) test.

2.8 *Calibration Error (CE).* The difference between the concentration indicated by the CEMS and the known concentration of the cylinder gas. A CE test procedure is performed to document the accuracy and linearity of the monitoring equipment over the entire measurement range.

2.9 *Performance Specification Test (PST) Period.* The period during which CD, CE, and response time tests are conducted.

2.10 *Centroidal Area.* A concentric area that is geometrically similar to the stack or duct cross section and is no greater than 1 percent of the stack or duct cross-sectional area.

3. Installation and Measurement Location Specifications

3.1 *CEMS Installation and Measurement Locations.* The CEMS must be installed in a location in which measurements representative of the source's emissions can be obtained. The optimum location of the sample interface for the CEMS is determined by a number of factors, including ease of access for calibration and maintenance, the degree to which sample conditioning will be required, the degree to which it represents total emissions, and the degree to which it represents the combustion situation in the firebox (where applicable). The location should be as free from in-leakage influences as possible and reasonably free from severe flow disturbances. The sample location should be at least two equivalent duct diameters downstream from the nearest control device, point of pollutant generation, or other point at which a change in the pollutant concentration or emission rate occurs and at least 0.5 diameter upstream from the exhaust or control device. The equivalent duct diameter is calculated as per 40 CFR part 60, appendix A, method 1, section 2.1. If these criteria are not achievable or if the location is otherwise less than optimum, the possibility of stratification should be investigated as described in section 3.2. The measurement point must be within the centroidal area of the stack or duct cross section.

3.2 *Stratification Test Procedure.* Stratification is defined as a difference in excess of 10 percent between the average concentration in the duct or stack and the concentration at any point more than 1.0 meter from the duct or stack wall. To determine whether effluent stratification exists, a dual probe system should be used to determine the average effluent concentration while measurements at each traverse point are being made. One probe, located at the stack or duct centroid, is used as a stationary reference point to indicate the change in effluent concentration over time. The second probe is used for sampling at the traverse points specified in 40 CFR part 60 appendix A, method 1. The monitoring system samples sequentially at the reference and traverse points throughout the testing period for five minutes at each point.

4. CEMS Performance and Equipment Specifications

If this method is applied in highly explosive areas, caution and care must be exercised in choice of equipment and installation.

4.1 *Flame Ionization Detector (FID) Analyzer.* A heated FID analyzer capable of meeting or exceeding the requirements of these specifications. Heated systems must maintain the temperature of the sample gas between 150 °C (300 °F) and 175 °C (350 °F) throughout the system. This requires all system components such as the probe, calibration valve, filter, sample lines, pump, and the FID to be kept heated at all times such that no moisture is condensed out of the

system. The essential components of the measurement system are described below:

4.1.1 *Sample Probe.* Stainless steel, or equivalent, to collect a gas sample from the centroidal area of the stack cross-section.

4.1.2 *Sample Line.* Stainless steel or Teflon tubing to transport the sample to the analyzer.

Note: Mention of trade names or specific products does not constitute endorsement by the Environmental Protection Agency.

4.1.3 *Calibration Valve Assembly.* A heated three-way valve assembly to direct the zero and calibration gases to the analyzer is recommended. Other methods, such as quick-connect lines, to route calibration gas to the analyzers are applicable.

4.1.4 *Particulate Filter.* An in-stack or out-of-stack sintered stainless steel filter is recommended if exhaust gas particulate loading is significant. An out-of-stack filter must be heated.

4.1.5 *Fuel.* The fuel specified by the manufacturer (e.g., 40 percent hydrogen/60 percent helium, 40 percent hydrogen/60 percent nitrogen gas mixtures, or pure hydrogen) should be used.

4.1.6 *Zero Gas.* High purity air with less than 0.1 parts per million by volume (ppm) HC as methane or carbon equivalent or less than 0.1 percent of the span value, whichever is greater.

4.1.7 *Calibration Gases.* Appropriate concentrations of propane gas (in air or nitrogen). Preparation of the calibration gases should be done according to the procedures in EPA Protocol 1. In addition, the manufacturer of the cylinder gas should provide a recommended shelf life for each calibration gas cylinder over which the concentration does not change by more than ±2 percent from the certified value.

4.2 *CEMS Span Value.* 100 ppm propane. The span value must be documented by the CEMS manufacturer with laboratory data.

4.3 *Daily Calibration Gas Values.* The owner or operator must choose calibration gas concentrations that include zero and high-level calibration values.

4.3.1 The zero level may be between zero and 0.1 ppm (zero and 0.1 percent of the span value).

4.3.2 The high-level concentration must be between 50 and 90 ppm (50 and 90 percent of the span value).

4.4 *Data Recorder Scale.* The strip chart recorder, computer, or digital recorder must be capable of recording all readings within the CEMS' measurement range and must have a resolution of 0.5 ppm (0.5 percent of span value).

4.5 *Response Time.* The response time for the CEMS must not exceed 2 minutes to achieve 95 percent of the final stable value.

4.6 *Calibration Drift.* The CEMS must allow the determination of CD at the zero and high-level values. The CEMS calibration response must not differ by more than ±3 ppm (±3 percent of the span value) after each 24-hour period of the 7-day test at both zero and high levels.

4.7 *Calibration Error.* The mean difference between the CEMS and reference values at all three test points listed below must be no greater than 5 ppm (±5 percent of the span value).

4.7.1 *Zero Level.* Zero to 0.1 ppm (0 to 0.1 percent of span value).

4.7.2 *Mid-Level.* 30 to 40 ppm (30 to 40 percent of span value).

4.7.3 *High-Level.* 70 to 80 ppm (70 to 80 percent of span value).

4.8 *Measurement and Recording Frequency.* The sample to be analyzed must pass through the measurement section of the analyzer without interruption. The detector must measure the sample concentration at least once every 15 seconds. An average emission rate must be computed and recorded at least once every 60 seconds.

4.9 *Hourly Rolling Average Calculation.* The CEMS must calculate every minute an hourly rolling average, which is the arithmetic mean of the 60 most recent 1-minute average values.

4.10 *Retest.* If the CEMS produces results within the specified criteria, the test is successful. If the CEMS does not meet one or more of the criteria, necessary corrections must be made and the performance tests repeated.

5. Performance Specification Test (PST) Periods

5.1 *Pretest Preparation Period.* Install the CEMS, prepare the PTM test site according to the specifications in section 3, and prepare the CEMS for operation and calibration according to the manufacturer's written instructions. A pretest conditioning period similar to that of the 7-day CD test is recommended to verify the operational status of the CEMS.

5.2 *Calibration Drift Test Period.* While the facility is operating under normal conditions, determine the magnitude of the CD at 24-hour intervals for seven consecutive days according to the procedure given in section 6.1. All CD determinations must be made following a 24-hour period during which no unscheduled maintenance, repair, or adjustment takes place. If the combustion unit is taken out of service during the test period, record the onset and duration of the downtime and continue the CD test when the unit resumes operation.

5.3 *Calibration Error Test and Response Time Test Periods.* Conduct the CE and response time tests during the CD test period.

6. Performance Specification Test Procedures

6.1 *Relative Accuracy Test Audit (RATA) and Absolute Calibration Audits (ACA).* The test procedures described in this section are in lieu of a RATA and ACA.

6.2 *Calibration Drift Test.*

6.2.1 *Sampling Strategy.* Conduct the CD test at 24-hour intervals for seven consecutive days using calibration gases at the two daily concentration levels specified in section 4.3. Introduce the two calibration gases into the sampling system as close to the sampling probe outlet as practical. The gas must pass through all CEM components used during normal sampling. If periodic automatic or manual adjustments are made to the CEMS zero and calibration settings, conduct the CD test immediately before these adjustments, or conduct it in such a way that the CD can be determined. Record the CEMS response and subtract this value from the reference (calibration gas) value. To meet the specification, none of the differences may exceed 3 percent of the span of the CEM.

6.2.2 *Calculations.* Summarize the results on a data sheet. An example is shown in Figure 1. Calculate the differences between the CEMS responses and the reference values.

6.3 *Response Time.* The entire system including sample extraction and transport, sample conditioning, gas analyses, and the data recording is checked with this procedure.

6.3.1 Introduce the calibration gases at the probe as near to the sample location as possible. Introduce the zero gas into the system. When the system output has stabilized (no change greater than 1 percent of full scale for 30 sec), switch to monitor stack effluent and wait for a stable value. Record the time (upscale response time) required to reach 95 percent of the final stable value.

6.3.2 Next, introduce a high-level calibration gas and repeat the above procedure. Repeat the entire procedure three times and determine the mean upscale and downscale response times. The longer of the two means is the system response time.

6.4 *Calibration Error Test Procedure.*

6.4.1 *Sampling Strategy.* Challenge the CEMS with zero gas and EPA Protocol 1 cylinder gases at measurement points within the ranges specified in section 4.7.

6.4.1.1 The daily calibration gases, if Protocol 1, may be used for this test.

BILLING CODE 6560–50–P

PERCENT OF SPAN[1]

6.4.1.2 Operate the CEMS as nearly as possible in its normal sampling mode. The calibration gas should be injected into the sampling system as close to the sampling probe outlet as practical and must pass through all filters, scrubbers, conditioners, and other monitor components used during normal sampling. Challenge the CEMS three non-consecutive times at each measurement point and record the responses. The duration of each gas injection should be for a sufficient period of time to ensure that the CEMS surfaces are conditioned.

6.4.2 *Calculations.* Summarize the results on a data sheet. An example data sheet is shown in Figure 2. Average the differences between the instrument response and the certified cylinder gas value for each gas. Calculate three CE results according to Equation 1. No confidence coefficient is used in CE calculations.

7. Equations

Calibration Error. Calculate CE using Equation 1.

$$CE = |d/FS| \times 100 \qquad \text{(Eq. 1)}$$

Where:

d = Mean difference between CEMS response and the known reference concentration, determined using Equation 2.

$$d = \frac{1}{n}\sum_{i=1}^{n} d_i \qquad \text{(Eq. 2)}$$

Where:

d_i = Individual difference between CEMS response and the known reference concentration..

8. Reporting

At a minimum, summarize in tabular form the results of the CD, response time, and CE test, as appropriate. Include all data sheets, calculations, CEMS data records, and cylinder gas or reference material certifications.

BILLING CODE 6560–50–P

TE:
CATION:
AN:

DIFFERENCE		
Zero/Low	Mid	High
%	%	%

rror Determination

9. References

1. Measurement of Volatile Organic Compounds-Guideline Series. U.S. Environmental Protection Agency, Research Triangle Park, North Carolina, 27711, EPA-450/2-78-041, June 1978.

2. Traceability Protocol for Establishing True Concentrations of Gases Used for Calibration and Audits of Continuous Source Emission Monitors (Protocol No. 1). U.S. Environmental Protection Agency ORD/EMSL, Research Triangle Park, North Carolina, 27711, June 1978.

3. Gasoline Vapor Emission Laboratory Evaluation-Part 2. U.S. Environmental Protection Agency, OAQPS, Research Triangle Park, North Carolina, 27711, EMB Report No. 76-GAS-6, August 1975.

* * * * *

PART 63—NATIONAL EMISSION STANDARDS FOR HAZARDOUS AIR POLLUTANTS FOR SOURCE CATEGORIES

1. The authority citation for part 63 continues to read as follows:

Authority: 42 U.S.C. 7401 *et seq.*

2. Part 63, subpart EEE, is revised to read as follows:

Subpart EEE—National Emission Standards for Hazardous Air Pollutants from Hazardous Waste Combustors

General

Sec.
63.1200 Who is subject to these regulations?
63.1201 Definitions and acronyms used in this subpart.
63.1202 [Reserved]

Emissions Standards and Operating Limits

63.1203 What are the standards for hazardous waste incinerators?
63.1204 What are the standards for hazardous waste burning cement kilns?
63.1205 What are the standards for hazardous waste burning lightweight aggregate kilns?

Monitoring and Compliance Provisions

63.1206 When and how must you comply with the standards and operating requirements?
63.1207 What are the performance testing requirements?
63.1208 What are the test methods?
63.1209 What are the monitoring requirements?

Notification, Reporting and Recordkeeping

63.1210 What are the notification requirements?
63.1211 What are the recordkeeping and reporting requirements?
63.1212 What are the other requirements pertaining to the NIC and associated progress reports?

Other

63.1213 How can the compliance date be extended to install pollution prevention or waste minimization controls?
Table 1 to Subpart EEE of Part 63—General Provisions Applicable to Subpart EEE
Appendix A to Subpart EEE—Quality Assurance Procedures for Continuous Emissions Monitors Used for Hazardous Waste Combustors

Subpart EEE—National Emission Standards for Hazardous Air Pollutants from Hazardous Waste Combustors

General

§ 63.1200 Who is subject to these regulations?

The provisions of this subpart apply to all hazardous waste combustors: hazardous waste incinerators, hazardous waste burning cement kilns, and hazardous waste burning lightweight aggregate kilns, except as provided in Table 1 of this section. Hazardous waste combustors are also subject to applicable requirements under parts 260–270 of this chapter.

(a) *What if I am an area source?* (1) Both area sources and major sources are subject to this subpart.

(2) Both area sources and major sources, not previously subject to title V, are immediately subject to the requirement to apply for and obtain a title V permit in all States, and in areas covered by part 71 of this chapter.

(b) These regulations in this subpart do not apply to sources that meet the criteria in Table 1 of this Section, as follows:

TABLE 1 TO § 63.1200.— HAZARDOUS WASTE COMBUSTORS EXEMPT FROM SUBPART EEE

If	And if	Then
(1) You are a previously affected source	(i) You ceased feeding hazardous waste for a period of time greater than the hazardous waste residence time (*i.e.*, hazardous waste no longer resides in the combustion chamber);. (ii) You are in compliance with the closure requirements of subpart G, parts 264 or 265 of this chapter;. (iii) You begin complying with the requirements of all other applicable standards of this part (Part 63); and. (iv) You notify the Administrator in writing that you are no longer an affected source under this subpart (Subpart EEE).	You are no longer subject to this subpart (Subpart EEE).
(2) You are a research, development, and demonstration source.	You operate for no longer than one year after first burning hazardous waste (Note that the Administrator can extent this one-year restriction on a case-by-case basis upon your written request documenting when you first burned hazardous waste and the justification for needing additional time to perform research, development, or demonstration operations.).	You are not subject to this subpart (Subpart EEE). This exemption applies even if there is a hazardous waste combustor at the plant site that is regulated under this subpart. You still, however, remain subject to § 270.65 of this chapter.
(3) The only hazardous wastes you burn are exempt from regulation under § 266.100(b) of this chapter.	.....	You are not subject to the requirements of this subpart (Subpart EEE).

(c) Table 1 of this section specifies the provisions of subpart A (General Provisions, §§ 63.1–63.15) that apply and those that do not apply to sources affected by this subpart.

§ 63.1201 Definitions and acronyms used in this subpart.

(a) The terms used in this subpart are defined in the Act, in subpart A of this part, or in this section as follows:

Air pollution control system means the equipment used to reduce the release of particulate matter and other pollutants to the atmosphere.

Automatic waste feed cutoff (AWFCO) system means a system comprised of cutoff valves, actuator, sensor, data manager, and other necessary components and electrical circuitry designed, operated and maintained to stop the flow of hazardous waste to the combustion unit automatically and immediately (except as provided by § 63.1206(c)(2)(viii)) when any operating requirement is exceeded.

By-pass duct means a device which diverts a minimum of 10 percent of a cement kiln's off gas, or a device which the Administrator determines on a case-by-case basis diverts a sample of kiln gas that contains levels of carbon monoxide or hydrocarbons representative of the levels in the kiln.

Combustion chamber means the area in which controlled flame combustion of hazardous waste occurs.

Continuous monitor means a device which continuously samples the regulated parameter specified in § 63.1209 without interruption, evaluates the detector response at least once every 15 seconds, and computes and records the average value at least every 60 seconds, except during allowable periods of calibration and except as defined otherwise by the CEMS Performance Specifications in appendix B, part 60 of this chapter.

Dioxin/furan and dioxins and furans mean tetra-, penta-, hexa-, hepta-, and octa-chlorinated dibenzo dioxins and furans.

Existing source means any affected source that is not a new source.

Feedrate operating limits means limits on the feedrate of materials (*e.g.*, metals, chlorine) to the combustor that are established based on comprehensive performance testing. The limits are established and monitored by knowing the concentration of the limited material (*e.g.*, chlorine) in each feedstream and the flowrate of each feedstream.

Feedstream means any material fed into a hazardous waste combustor, including, but not limited to, any pumpable or nonpumpable solid, liquid, or gas.

Flowrate means the rate at which a feedstream is fed into a hazardous waste combustor.

Hazardous waste is defined in § 261.3 of this chapter.

Hazardous waste burning cement kiln means a rotary kiln and any associated preheater or precalciner devices that produce clinker by heating limestone and other materials for subsequent production of cement for use in commerce, and that burns hazardous waste at any time.

Hazardous waste combustor means a hazardous waste incinerator, hazardous waste burning cement kiln, or hazardous waste burning lightweight aggregate kiln.

Hazardous waste incinerator means a device defined as an incinerator in § 260.10 of this chapter and that burns hazardous waste at any time.

Hazardous waste lightweight aggregate kiln means a rotary kiln that produces clinker by heating materials such as slate, shale and clay for subsequent production of lightweight aggregate used in commerce, and that burns hazardous waste at any time.

Hazardous waste residence time means the time elapsed from cutoff of the flow of hazardous waste into the combustor (including, for example, the time required for liquids to flow from the cutoff valve into the combustor) until solid, liquid, and gaseous materials from the hazardous waste, excluding residues that may adhere to combustion chamber surfaces, exit the combustion chamber. For combustors with multiple firing systems whereby the residence time may vary for the firing systems, the hazardous waste residence time for purposes of complying with this subpart means the longest residence time for any firing system in use at the time of waste cutoff.

Initial comprehensive performance test means the comprehensive performance test that is used as the basis for initially demonstrating compliance with the standards.

In-line kiln raw mill means a hazardous waste burning cement kiln design whereby kiln gas is ducted through the raw material mill for portions of time to facilitate drying and heating of the raw material.

Instantaneous monitoring means continuously sampling, detecting, and recording the regulated parameter without use of an averaging period.

Monovent means an exhaust configuration of a building or emission control device (*e.g.* positive pressure fabric filter) that extends the length of the structure and has a width very small in relation to its length (*i.e.*, length to width ratio is typically greater than 5:1). The exhaust may be an open vent with or without a roof, louvered vents, or a combination of such features.

MTEC means maximum theoretical emissions concentration of metals or HCl/Cl, expressed as μg/dscm, and is calculated by dividing the feedrate by the gas flowrate.

New source means any affected source the construction or reconstruction of which is commenced after April 19, 1996.

One-minute average means the average of detector responses calculated at least every 60 seconds from responses obtained at least every 15 seconds.

Operating record means a documentation retained at the facility for ready inspection by authorized officials of all information required by the standards to document and maintain compliance with the applicable regulations, including data and information, reports, notifications, and communications with regulatory officials.

Operating requirements means operating terms or conditions, limits, or operating parameter limits developed under this subpart that ensure compliance with the emission standards.

Raw material feed means the prepared and mixed materials, which include but are not limited to materials such as limestone, clay, shale, sand, iron ore, mill scale, cement kiln dust and flyash, that are fed to a cement or lightweight aggregate kiln. Raw material feed does not include the fuels used in the kiln to produce heat to form the clinker product.

Research, development, and demonstration source means a source engaged in laboratory, pilot plant, or prototype demonstration operations:

(1) Whose primary purpose is to conduct research, development, or short-term demonstration of an innovative and experimental hazardous waste treatment technology or process; and

(2) Where the operations are under the close supervision of technically-trained personnel.

Rolling average means the average of all one-minute averages over the averaging period.

Run means the net period of time during which an air emission sample is collected under a given set of operating conditions. Three or more runs constitutes a test. Unless otherwise specified, a run may be either intermittent or continuous.

Run average means the average of the one-minute average parameter values for a run.

TEQ means toxicity equivalence, the international method of relating the toxicity of various dioxin/furan congeners to the toxicity of 2,3,7,8-tetrachlorodibenzo-p-dioxin.

You means the owner or operator of a hazardous waste combustor.

(b) The acronyms used in this subpart refer to the following:

AWFCO means automatic waste feed cutoff.

CAS means chemical abstract services registry.

CEMS means continuous emissions monitoring system.

CMS means continuous monitoring system.

DRE means destruction and removal efficiency.

MACT means maximum achievable control technology.

MTEC means maximum theoretical emissions concentration.

NIC means notification of intent to comply.

§ 63.1202 [Reserved]

Emissions Standards and Operating Limits

§ 63.1203 What are the standards for hazardous waste incinerators?

(a) *Emission limits for existing sources* You must not discharge or cause combustion gasses to be emitted into the atmosphere that contain:

(1) For dioxins and furans:

(i) Emissions in excess of 0.20 ng TEQ/dscm corrected to 7 percent oxygen; or

(ii) Emissions in excess of 0.40 ng TEQ/dscm corrected to 7 percent oxygen provided that the combustion gas temperature at the inlet to the initial particulate matter control device is 400°F or lower based on the average of the test run average temperatures; [1]

(2) Mercury in excess of 130 µg/dscm corrected to 7 percent oxygen;

(3) Lead and cadmium in excess of 240 "g/dscm, combined emissions, corrected to 7 percent oxygen;

(4) Arsenic, beryllium, and chromium in excess of 97 "g/dscm, combined emissions, corrected to 7 percent oxygen;

(5) For carbon monoxide and hydrocarbons, either:

(i) Carbon monoxide in excess of 100 parts per million by volume, over an hourly rolling average (monitored continuously with a continuous emissions monitoring system), dry basis and corrected to 7 percent oxygen, and hydrocarbons in excess of 10 parts per million by volume over an hourly rolling average (monitored continuously with a continuous emissions monitoring system), dry basis, corrected to 7 percent oxygen, and reported as propane, at any time during the destruction and removal efficiency (DRE) test runs or their equivalent as provided by § 63.1206(b)(7); or

(ii) Hydrocarbons in excess of 10 parts per million by volume, over an hourly rolling average (monitored continuously with a continuous emissions monitoring system), dry basis, corrected to 7 percent oxygen, and reported as propane;

(6) Hydrochloric acid and chlorine gas in excess of 77 parts per million by volume, combined emissions, expressed as hydrochloric acid equivalents, dry basis and corrected to 7 percent oxygen; and

(7) Particulate matter in excess of 34 mg/dscm corrected to 7 percent oxygen.

(b) *Emission limits for new sources.* You must not discharge or cause combustion gases to be emitted into the atmosphere that contain:

(1) Dioxins and furans in excess of 0.20 ng TEQ/dscm, corrected to 7 percent oxygen;

(2) Mercury in excess of 45 µg/dscm corrected to 7 percent oxygen;

(3) Lead and cadmium in excess of 24 µg/dscm, combined emissions, corrected to 7 percent oxygen;

(4) Arsenic, beryllium, and chromium in excess of 97 µg/dscm, combined emissions, corrected to 7 percent oxygen;

(5) For carbon monoxide and hydrocarbons, either:

(i) Carbon monoxide in excess of 100 parts per million by volume, over an hourly rolling average (monitored continuously with a continuous emissions monitoring system), dry basis and corrected to 7 percent oxygen, and hydrocarbons in excess of 10 parts per million by volume over an hourly rolling average (monitored continuously with a continuous emissions monitoring system), dry basis, corrected to 7 percent oxygen, and reported as propane, at any time during the destruction and removal efficiency (DRE) test runs or their equivalent as provided by § 63.1206(b)(7); or

(ii) Hydrocarbons in excess of 10 parts per million by volume, over an hourly rolling average (monitored continuously with a continuous emissions monitoring system), dry basis, corrected to 7 percent oxygen, and reported as propane;

(6) Hydrochloric acid and chlorine gas in excess of 21 parts per million by volume, combined emissions, expressed as hydrochloric acid equivalents, dry basis and corrected to 7 percent oxygen; and

(7) Particulate matter in excess of 34 mg/dscm corrected to 7 percent oxygen.

(c) *Destruction and removal efficiency (DRE) standard.* (1) *99.99% DRE.* Except as provided in paragraph (c)(2) of this section, you must achieve a destruction and removal efficiency (DRE) of 99.99% for each principle organic hazardous constituent (POHC) designated under paragraph (c)(3) of this section. You must calculate DRE for each POHC from the following equation:

$$DRE = \left[1 - \left(W_{out} / W_{in}\right)\right] \times 100\%$$

Where:

W_{in}=mass feedrate of one principal organic hazardous constituent (POHC) in a waste feedstream; and

W_{out}=mass emission rate of the same POHC present in exhaust emissions prior to release to the atmosphere

(2) *99.9999% DRE.* If you burn the dioxin-listed hazardous wastes FO20, FO21, FO22, FO23, FO26, or FO27 (see § 261.31 of this chapter), you must achieve a destruction and removal efficiency (DRE) of 99.9999% for each principle organic hazardous constituent (POHC) that you designate under paragraph (c)(3) of this section. You must demonstrate this DRE performance on POHCs that are more difficult to incinerate than tetro-, penta-, and hexachlorodibenzo-p-dioxins and dibenzofurans. You must use the equation in paragraph (c)(1) of this section calculate DRE for each POHC. In addition, you must notify the Administrator of your intent to incinerate hazardous wastes FO20, FO21, FO22, FO23, FO26, or FO27.

(3) *Principal organic hazardous constituents (POHCs).* (i) You must treat the Principal Organic Hazardous Constituents (POHCs) in the waste feed that you specify under paragraph (c)(3)(ii) of this section to the extent required by paragraphs (c)(1) and (c)(2) of this section.

(ii) You must specify one or more POHCs from the list of hazardous air pollutants established by 42 U.S.C. 7412(b)(1), excluding caprolactam (CAS number 105602) as provided by § 63.60, for each waste to be burned. You must base this specification on the degree of difficulty of incineration of the organic constituents in the waste and on their concentration or mass in the waste feed, considering the results of waste analyses or other data and information.

(d) *Significant figures.* The emission limits provided by paragraphs (a) and (b) of this section are presented with two significant figures. Although you must perform intermediate calculations using at least three significant figures, you may round the resultant emission levels to two significant figures to document compliance.

[1] For purposes of compliance, operation of a wet particulate control device is presumed to meet the 400°F or lower requirement.

(e) *Air emission standards for equipment leaks, tanks, surface impoundments, and containers.* You are subject to the air emission standards of subparts BB and CC, part 264, of this chapter.

§ 63.1204 What are the standards for hazardous waste burning cement kilns?

(a) *Emission limits for existing sources.* You must not discharge or cause combustion gases to be emitted into the atmosphere that contain:

(1) For dioxins and furans:

(i) Emissions in excess of 0.20 ng TEQ/dscm corrected to 7 percent oxygen; or

(ii) Emissions in excess of 0.40 ng TEQ/dscm corrected to 7 percent oxygen provided that the combustion gas temperature at the inlet to the initial dry particulate matter control device is 400°F or lower based on the average of the test run average temperatures;

(2) Mercury in excess of 120 µg/dscm corrected to 7 percent oxygen;

(3) Lead and cadmium in excess of 240 µg/dscm, combined emissions, corrected to 7 percent oxygen;

(4) Arsenic, beryllium, and chromium in excess of 56 µg/dscm, combined emissions, corrected to 7 percent oxygen;

(5) Carbon monoxide and hydrocarbons. (i) For kilns equipped with a by-pass duct or midkiln gas sampling system, either:

(A) Carbon monoxide in the by-pass duct or midkiln gas sampling system in excess of 100 parts per million by volume, over an hourly rolling average (monitored continuously with a continuous emissions monitoring system), dry basis and corrected to 7 percent oxygen, and hydrocarbons in the by-pass duct in excess of 10 parts per million by volume over an hourly rolling average (monitored continuously with a continuous emissions monitoring system), dry basis, corrected to 7 percent oxygen, and reported as propane, at any time during the destruction and removal efficiency (DRE) test runs or their equivalent as provided by § 63.1206(b)(7); or

(B) Hydrocarbons in the by-pass duct or midkiln gas sampling system in excess of 10 parts per million by volume, over an hourly rolling average (monitored continuously with a continuous emissions monitoring system), dry basis, corrected to 7 percent oxygen, and reported as propane;

(ii) For kilns not equipped with a by-pass duct or midkiln gas sampling system, either:

(A) Hydrocarbons in the main stack in excess of 20 parts per million by volume, over an hourly rolling average (monitored continuously with a continuous emissions monitoring system), dry basis, corrected to 7 percent oxygen, and reported as propane; or

(B) Carbon monoxide in the main stack in excess of 100 parts per million by volume, over an hourly rolling average (monitored continuously with a continuous emissions monitoring system), dry basis and corrected to 7 percent oxygen, and hydrocarbons in the main stack in excess of 20 parts per million by volume over an hourly rolling average (monitored continuously with a continuous emissions monitoring system), dry basis, corrected to 7 percent oxygen, and reported as propane, at any time during the destruction and removal efficiency (DRE) test runs or their equivalent as provided by § 63.1206(b)(7).

(6) Hydrochloric acid and chlorine gas in excess of 130 parts per million by volume, combined emissions, expressed as hydrochloric acid equivalents, dry basis, corrected to 7 percent oxygen; and

(7) Particulate matter in excess of 0.15 kg/Mg dry feed and opacity greater than 20 percent.

(i) You must use suitable methods to determine the kiln raw material feedrate.

(ii) Except as provided in paragraph (a)(7)(iii) of this section, you must compute the particulate matter emission rate, E, from the following equation:

$$E = (C_s \times Q_{sd})/P$$

where:

E = emission rate of particulate matter, kg/Mg of kiln raw material feed;

C_s = concentration of particulate matter, kg/dscm;

Q_{sd} = volumetric flowrate of effluent gas, dscm/hr;

P = total kiln raw material feed (dry basis), Mg/hr.

(iii) If you operate a preheater or preheater/precalciner kiln with dual stacks, you must test simultaneously and compute the combined particulate matter emission rate, E_c, from the following equation:

$$E_c = (C_{sk} \times Q_{sdk} + C_{sb} \times Q_{sdb})/P$$

where:

E_c = the combined emission rate of particulate matter from the kiln and bypass stack, kg/Mg of kiln raw material feed;

C_{sk} = concentration of particulate matter in the kiln effluent, kg/dscm;

Q_{sdk} = volumetric flowrate of kiln effluent gas, dscm/hr;

C_{sb} = concentration of particulate matter in the bypass stack effluent, kg/dscm;

Q_{sdb} = volumetric flowrate of bypass stack effluent gas, dscm/hr;

P = total kiln raw material feed (dry basis), Mg/hr.

(b) *Emission limits for new sources.* You must not discharge or cause combustion gases to be emitted into the atmosphere that contain:

(1) For dioxins and furans:

(i) Emissions in excess of 0.20 ng TEQ/dscm corrected to 7 percent oxygen; or

(ii) Emissions in excess of 0.40 ng TEQ/dscm corrected to 7 percent oxygen provided that the combustion gas temperature at the inlet to the initial dry particulate matter control device is 400 °F or lower based on the average of the test run average temperatures;

(2) Mercury in excess of 56 µg/dscm corrected to 7 percent oxygen;

(3) Lead and cadmium in excess of 180 µg/dscm, combined emissions, corrected to 7 percent oxygen;

(4) Arsenic, beryllium, and chromium in excess of 54 µg/dscm, combined emissions, corrected to 7 percent oxygen;

(5) Carbon monoxide and hydrocarbons. (i) For kilns equipped with a by-pass duct or midkiln gas sampling system, carbon monoxide and hydrocarbons emissions are limited in both the bypass duct or midkiln gas sampling system and the main stack as follows:

(A) Emissions in the by-pass or midkiln gas sampling system are limited to either:

(*1*) Carbon monoxide in excess of 100 parts per million by volume, over an hourly rolling average (monitored continuously with a continuous emissions monitoring system), dry basis and corrected to 7 percent oxygen, and hydrocarbons in excess of 10 parts per million by volume over an hourly rolling average (monitored continuously with a continuous emissions monitoring system), dry basis, corrected to 7 percent oxygen, and reported as propane, at any time during the destruction and removal efficiency (DRE) test runs or their equivalent as provided by § 63.1206(b)(7); or

(*2*) Hydrocarbons in the by-pass duct or midkiln gas sampling system in excess of 10 parts per million by volume, over an hourly rolling average (monitored continuously with a continuous emissions monitoring system), dry basis, corrected to 7 percent oxygen, and reported as propane; and

(B) Hydrocarbons in the main stack are limited, if construction of the kiln

commenced after April 19, 1996 at a plant site where a cement kiln (whether burning hazardous waste or not) did not previously exist, to 50 parts per million by volume, over a 30-day block average (monitored continuously with a continuous monitoring system), dry basis, corrected to 7 percent oxygen, and reported as propane.

(ii) For kilns not equipped with a by-pass duct or midkiln gas sampling system, hydrocarbons and carbon monoxide are limited in the main stack to either:

(A) Hydrocarbons not exceeding 20 parts per million by volume, over an hourly rolling average (monitored continuously with a continuous emissions monitoring system), dry basis, corrected to 7 percent oxygen, and reported as propane; or

(B) (*1*) Carbon monoxide not exceeding 100 part per million by volume, over an hourly rolling average (monitored continuously with a continuous emissions monitoring system), dry basis, corrected to 7 percent oxygen; and

(*2*) Hydrocarbons not exceeding 20 parts per million by volume, over an hourly rolling average (monitored continuously with a continuous monitoring system), dry basis, corrected to 7 percent oxygen, and reported as propane at any time during the destruction and removal efficiency (DRE) test runs or their equivalent as provided by § 63.1206(b)(7); and

(*3*) If construction of the kiln commenced after April 19, 1996 at a plant site where a cement kiln (whether burning hazardous waste or not) did not previously exist, hydrocarbons are limited to 50 parts per million by volume, over a 30-day block average (monitored continuously with a continuous monitoring system), dry basis, corrected to 7 percent oxygen, and reported as propane.

(6) Hydrochloric acid and chlorine gas in excess of 86 parts per million, combined emissions, expressed as hydrochloric acid equivalents, dry basis and corrected to 7 percent oxygen; and

(7) Particulate matter in excess of 0.15 kg/Mg dry feed and opacity greater than 20 percent.

(i) You must use suitable methods to determine the kiln raw material feedrate.

(ii) Except as provided in paragraph (a)(7)(iii) of this section, you must compute the particulate matter emission rate, E, from the equation specified in paragraph (a)(7)(ii) of this section.

(iii) If you operate a preheater or preheater/precalciner kiln with dual stacks, you must test simultaneously and compute the combined particulate matter emission rate, Ec, from the equation specified in paragraph (a)(7)(iii) of this section.

(c) *Destruction and removal efficiency (DRE) standard*—(1) *99.99% DRE.* Except as provided in paragraph (c)(2) of this section, you must achieve a destruction and removal efficiency (DRE) of 99.99% for each principle organic hazardous constituent (POHC) designated under paragraph (c)(3) of this section. You must calculate DRE for each POHC from the following equation:

$$DRE = \left[1 - \left(W_{out} / W_{in}\right)\right] \times 100\%$$

Where:

W_{in}=mass feedrate of one principal organic hazardous constituent (POHC) in a waste feedstream; and

W_{out}=mass emission rate of the same POHC present in exhaust emissions prior to release to the atmosphere

(2) *99.9999% DRE.* If you burn the dioxin-listed hazardous wastes FO20, FO21, FO22, FO23, FO26, or FO27 (see § 261.31 of this chapter), you must achieve a destruction and removal efficiency (DRE) of 99.9999% for each principle organic hazardous constituent (POHC) that you designate under paragraph (c)(3) of this section. You must demonstrate this DRE performance on POHCs that are more difficult to incinerate than tetro-, penta-, and hexachlorodibenzo-p-dioxins and dibenzofurans. You must use the equation in paragraph (c)(1) of this section calculate DRE for each POHC. In addition, you must notify the Administrator of your intent to burn hazardous wastes FO20, FO21, FO22, FO23, FO26, or FO27.

(3) *Principal organic hazardous constituents (POHCs).* (i) You must treat the Principal Organic Hazardous Constituents (POHCs) in the waste feed that you specify under paragraph (c)(3)(ii) of this section to the extent required by paragraphs (c)(1) and (c)(2) of this section.

(ii) You must specify one or more POHCs from the list of hazardous air pollutants established by 42 U.S.C. 7412(b)(1), excluding caprolactam (CAS number 105602) as provided by § 63.60, for each waste to be burned. You must base this specification on the degree of difficulty of incineration of the organic constituents in the waste and on their concentration or mass in the waste feed, considering the results of waste analyses or other data and information.

(d) *Cement kilns with in-line kiln raw mills*—(1) *General.* (i) You must conduct performance testing when the raw mill is on-line and when the mill is off-line to demonstrate compliance with the emission standards, and you must establish separate operating parameter limits under § 63.1209 for each mode of operation, except as provided by paragraph (d)(1)(iv) of this section.

(ii) You must document in the operating record each time you change from one mode of operation to the alternate mode and begin complying with the operating parameter limits for that alternate mode of operation.

(iii) You must establish rolling averages for the operating parameter limits anew (*i.e.*, without considering previous recordings) when you begin complying with the operating limits for the alternate mode of operation.

(iv) If your in-line kiln raw mill has dual stacks, you may assume that the dioxin/furan emission levels in the by-pass stack and the operating parameter limits determined during performance testing of the by-pass stack when the raw mill is off-line are the same as when the mill is on-line.

(2) *Emissions averaging.* You may comply with the mercury, semivolatile metal, low volatile metal, and hydrochloric acid/chlorine gas emission standards on a time-weighted average basis under the following procedures:

(i) *Averaging methodology.* You must calculate the time-weighted average emission concentration with the following equation:

Where:

C_{total}=time-weighted average concentration of a regulated constituent considering both raw mill on time and off time.

$C_{mill\text{-}off}$=average performance test concentration of regulated constituent with the raw mill off-line.

$C_{mill\text{-}on}$=average performance test concentration of regulated constituent with the raw mill on-line.

$T_{mill\text{-}off}$=time when kiln gases are not routed through the raw mill

$T_{mill\text{-}on}$=time when kiln gases are routed through the raw mill

$$C_{total} = \left\{C_{mill\text{-}off} \times \left(T_{mill\text{-}off} / \left(T_{mill\text{-}off} + T_{mill\text{-}on}\right)\right)\right\} + \left\{C_{mill\text{-}on} \times \left(T_{mill\text{-}on} / \left(T_{mill\text{-}off} + T_{mill\text{-}on}\right)\right)\right\}$$

(ii) *Compliance.* (A) If you use this emission averaging provision, you must document in the operating record compliance with the emission standards on an annual basis by using the equation provided by paragraph (d)(2) of this section.

(B) Compliance is based on one-year block averages beginning on the day you submit the initial notification of compliance.

(iii) *Notification.* (A) If you elect to document compliance with one or more emission standards using this emission averaging provision, you must notify the Administrator in the initial comprehensive performance test plan submitted under § 63.1207(e).

(B) You must include historical raw mill operation data in the performance test plan to estimate future raw mill down-time and document in the performance test plan that estimated emissions and estimated raw mill down-time will not result in an exceedance of an emission standard on an annual basis.

(C) You must document in the notification of compliance submitted under § 63.1207(j) that an emission standard will not be exceeded based on the documented emissions from the performance test and predicted raw mill down-time.

(e) *Preheater or preheater/precalciner kilns with dual stacks.*—(1) *General.* You must conduct performance testing on each stack to demonstrate compliance with the emission standards, and you must establish operating parameter limits under § 63.1209 for each stack, except as provided by paragraph (d)(1)(iv) of this section for dioxin/furan emissions testing and operating parameter limits for the by-pass stack of in-line raw mills.

(2) *Emissions averaging.* You may comply with the mercury, semivolatile metal, low volatile metal, and hydrochloric acid/chlorine gas emission standards specified in this section on a gas flowrate-weighted average basis under the following procedures:

(i) *Averaging methodology.* You must calculate the gas flowrate-weighted average emission concentration using the following equation:

$$C_{tot} = \left\{C_{main} \times \left(Q_{main} / \left(Q_{main} + Q_{bypass}\right)\right)\right\} + \left\{C_{bypass} \times \left(Q_{bypass} / \left(Q_{main} + Q_{bypass}\right)\right)\right\}$$

Where

C_{tot}=gas flowrate-weighted average concentration of the regulated constituent

C_{main}=average performance test concentration demonstrated in the main stack

C_{bypass}=average performance test concentration demonstrated in the bypass stack

Q_{main}=volumetric flowrate of main stack effluent gas

Q_{bypass}=volumetric flowrate of bypass effluent gas

(ii) *Compliance.* (A) You must demonstrate compliance with the emission standard(s) using the emission concentrations determined from the performance tests and the equation provided by paragraph (e)(1) of this section; and

(B) You must develop operating parameter limits for bypass stack and main stack flowrates that ensure the emission concentrations calculated with the equation in paragraph (e)(1) of this section do not exceed the emission standards on a 12-hour rolling average basis. You must include these flowrate limits in the Notification of Compliance.

(iii) *Notification.* If you elect to document compliance under this emissions averaging provision, you must:

(A) Notify the Administrator in the initial comprehensive performance test plan submitted under § 63.1207(e). The performance test plan must include, at a minimum, information describing the flowrate limits established under paragraph (e)(2)(ii)(B) of this section; and

(B) Document in the Notification of Compliance submitted under § 63.1207(j) the demonstrated gas flowrate-weighted average emissions that you calculate with the equation provided by paragraph (e)(2) of this section.

(f) *Significant figures.* The emission limits provided by paragraphs (a) and (b) of this section are presented with two significant figures. Although you must perform intermediate calculations using at least three significant figures, you may round the resultant emission levels to two significant figures to document compliance.

(g) *Air emission standards for equipment leaks, tanks, surface impoundments, and containers.* You are subject to the air emission standards of subparts BB and CC, part 264, of this chapter.

(h) When you comply with the particulate matter requirements of paragraphs (a)(7) or (b)(7) of this section, you are exempt from the New Source Performance Standard for particulate matter and opacity under § 60.60 of this chapter.

§ 63.1205 What are the standards for hazardous waste burning lightweight aggregate kilns?

(a) *Emission limits for existing sources.* You must not discharge or cause combustion gases to be emitted into the atmosphere that contain:

(1) For dioxins and furans:

(i) Emissions in excess of 0.20 ng TEQ/dscm corrected to 7 percent oxygen; or

(ii) Emissions in excess of 0.40 ng TEQ/dscm corrected to 7 percent oxygen provided that the combustion gas temperature at the exit of the (last) combustion chamber (or exit of any waste heat recovery system) is rapidly quenched to 400°F or lower based on the average of the test run average temperatures;

(2) Mercury in excess of 47 μg/dscm corrected to 7 percent oxygen;

(3) Lead and cadmium in excess of 250 μg/dscm, combined emissions, corrected to 7 percent oxygen;

(4) Arsenic, beryllium, and chromium in excess of 110 μg/dscm, combined emissions, corrected to 7 percent oxygen;

(5) Carbon monoxide and hydrocarbons. (i) Carbon monoxide in excess of 100 parts per million by volume, over an hourly rolling average (monitored continuously with a continuous emissions monitoring system), dry basis and corrected to 7 percent oxygen, and hydrocarbons in excess of 20 parts per million by volume over an hourly rolling average (monitored continuously with a continuous emissions monitoring system), dry basis, corrected to 7 percent oxygen, and reported as propane, at any time during the destruction and removal efficiency (DRE) test runs or their equivalent as provided by § 63.1206(b)(7); or

(ii) Hydrocarbons in excess of 20 parts per million by volume, over an hourly rolling average, dry basis, corrected to 7 percent oxygen, and reported as propane;

(6) Hydrochloric acid and chlorine gas in excess of 230 parts per million by volume, combined emissions, expressed as hydrochloric acid equivalents, dry

basis and corrected to 7 percent oxygen; and

(7) Particulate matter in excess of 57 mg/dscm corrected to 7 percent oxygen.

(b) *Emission limits for new sources.* You must not discharge or cause combustion gases to be emitted into the atmosphere that contain:

(1) For dioxins and furans:

(i) Emissions in excess of 0.20 ng TEQ/dscm corrected to 7 percent oxygen; or

(ii) Emissions in excess of 0.40 ng TEQ/dscm corrected to 7 percent oxygen provided that the temperature at the exit of the (last) combustion chamber (or exit of any waste heat recovery system) is rapidly quenched to 400°F or lower based on the average of the test run average temperatures;

(2) Mercury in excess of 33 μg/dscm corrected to 7 percent oxygen;

(3) Lead and cadmium in excess of 43 μg/dscm, combined emissions, corrected to 7 percent oxygen;

(4) Arsenic, beryllium, and chromium in excess of 110 μg/dscm, combined emissions, corrected to 7 percent oxygen;

(5) Carbon monoxide in excess of 100 parts per million by volume, over an hourly rolling average (monitored continuously with a continuous emissions monitoring system), dry basis and corrected to 7 percent oxygen, and hydrocarbons in excess of 20 parts per million by volume over an hourly rolling average (monitored continuously with a continuous emissions monitoring system), dry basis, corrected to 7 percent oxygen, and reported as propane, at any time during the destruction and removal efficiency (DRE) test runs or their equivalent as provided by § 63.1206(b)(7); or

(ii) Hydrocarbons in excess of 20 parts per million by volume, over an hourly rolling average, dry basis, corrected to 7 percent oxygen, and reported as propane;

(6) Hydrochloric acid and chlorine gas in excess of 41 parts per million by volume, combined emissions, expressed as hydrochloric acid equivalents, dry basis and corrected to 7 percent oxygen; and

(7) Particulate matter in excess of 57 mg/dscm corrected to 7 percent oxygen.

(c) *Destruction and removal efficiency (DRE) standard*—(1) *99.99% DRE.* Except as provided in paragraph (c)(2) of this section, you must achieve a destruction and removal efficiency (DRE) of 99.99% for each principal organic hazardous constituent (POHC) designated under paragraph (c)(3) of this section. You must calculate DRE for each POHC from the following equation:

$$DRE = \left[1 - \left(W_{out} / W_{in}\right)\right] \times 100\%$$

Where:

W_{in}=mass feedrate of one principal organic hazardous constituent (POHC) in a waste feedstream; and

W_{out}=mass emission rate of the same POHC present in exhaust emissions prior to release to the atmosphere

(2) *99.9999% DRE.* If you burn the dioxin-listed hazardous wastes FO20, FO21, FO22, FO23, FO26, or FO27 (see § 261.31 of this chapter), you must achieve a destruction and removal efficiency (DRE) of 99.9999% for each principal organic hazardous constituent (POHC) that you designate under paragraph (c)(3) of this section. You must demonstrate this DRE performance on POHCs that are more difficult to incinerate than tetro-, penta-, and hexachlorodibenzo-dioxins and dibenzofurans. You must use the equation in paragraph (c)(1) of this section calculate DRE for each POHC. In addition, you must notify the Administrator of your intent to burn hazardous wastes FO20, FO21, FO22, FO23, FO26, or FO27.

(3) *Principal organic hazardous constituents (POHCs).* (i) You must treat the Principal Organic Hazardous Constituents (POHCs) in the waste feed that you specify under paragraph (c)(3)(ii) of this section to the extent required by paragraphs (c)(1) and (c)(2) of this section.

(ii) You must specify one or more POHCs from the list of hazardous air pollutants established by 42 U.S.C. 7412(b)(1), excluding caprolactam (CAS number 105602) as provided by § 63.60, for each waste to be burned. You must base this specification on the degree of difficulty of incineration of the organic constituents in the waste and on their concentration or mass in the waste feed, considering the results of waste analyses or other data and information.

(d) *Significant figures.* The emission limits provided by paragraphs (a) and (b) of this section are presented with two significant figures. Although you must perform intermediate calculations using at least three significant figures, you may round the resultant emission levels to two significant figures to document compliance.

(e) *Air emission standards for equipment leaks, tanks, surface impoundments, and containers.* You are subject to the air emission standards of subparts BB and CC, part 264, of this chapter.

Monitoring and Compliance Provisions

§ 63.1206 When and how must you comply with the standards and operating requirements?

(a) *Compliance dates*— (1) *Compliance date for existing sources.* You must comply with the standards of this subpart no later than September 30, 2002 unless the Administrator grants you an extension of time under § 63.6(i) or § 63.1213, or you comply with the requirements of paragraph (a)(2) of this section for sources that do not intend to comply with the emission standards.

(2) *Sources that do not intend to comply.* Except for those sources meeting the requirements of § 63.1210(b)(1)(iv), sources:

(i) That signify in their Notification of Intent to Comply (NIC) an intent not to comply with the requirements of this subpart, must stop burning hazardous waste on or before October 1, 2001.

(ii) That do not intend to comply with this subpart must include in their NIC a schedule that includes key dates for the steps to be taken to stop burning hazardous waste. Key dates include the date for submittal of RCRA closure documents required under subpart G, part 264, of this chapter.

(3) *New or reconstructed sources.* (i) If you commenced construction or reconstruction of your hazardous waste combustor after April 19, 1996, you must comply with this subpart by the later of September 30, 1999 or the date the source starts operations, except as provided by paragraph (a)(3)(ii) of this section.

(ii) For a standard in this subpart that is more stringent than the standard proposed on April 19, 1996, you may achieve compliance no later than September 30, 2002 if you comply with the standard proposed on April 19, 1996 after September 30, 1999. This exception does not apply, however, to new or reconstructed area source hazardous waste combustors that become major sources after September 30, 1999. As provided by § 63.6(b)(7), such sources must comply with this subpart at startup.

(b) *Compliance with standards*—(1) *Applicability.* The emission standards

and operating requirements set forth in this subpart apply at all times except:

(i) During startup, shutdown, and malfunction, provided that hazardous waste is not in the combustion chamber (*i.e.*, the hazardous waste feed to the combustor has been cutoff for a period of time not less than the hazardous waste residence time) during those periods of operation, as provided by paragraph (c)(2)(ii) of this section; and

(ii) When hazardous waste is not in the combustion chamber (i.e., the hazardous waste feed to the combustor has been cutoff for a period of time not less than the hazardous waste residence time), and you have:

(A) Submitted a written, one-time notice to the Administrator documenting compliance with all applicable requirements and standards promulgated under authority of the Clean Air Act, including sections 112 and 129; and

(B) Documented in the operating record that you are complying with such applicable requirements in lieu of the emission standards and operating requirements of this subpart.

(2) *Methods for determining compliance.* The Administrator will determine compliance with the emission standards of this subpart as provided by § 63.6(f)(2). Conducting performance testing under operating conditions representative of the extreme range of normal conditions is consistent with the requirements of §§ 63.6(f)(2)(iii)(B) and 63.7(e)(1) to conduct performance testing under representative operating conditions.

(3) *Finding of compliance.* The Administrator will make a finding concerning compliance with the emission standards and other requirements of this subpart as provided by § 63.6(f)(3).

(4) *Extension of compliance with emission standards.* The Administrator may grant an extension of compliance with the emission standards of this subpart as provided by §§ 63.6(i) and 63.1213.

(5) *Changes in design, operation, or maintenance*—(i) *Changes that may adversely affect compliance.* If you plan to change (as defined in paragraph (b)(6)(iii) of this section) the design, operation, or maintenance practices of the source in a manner that may adversely affect compliance with any emission standard that is not monitored with a CEMS:

(A) *Notification.* You must notify the Administrator at least 60 days prior to the change, unless you document circumstances that dictate that such prior notice is not reasonably feasible. The notification must include:

(1) A description of the changes and which emission standards may be affected; and

(2) A comprehensive performance test schedule and test plan under the requirements of § 63.1207(f) that will document compliance with the affected emission standard(s);

(B) *Performance test.* You must conduct a comprehensive performance test under the requirements of §§ 63.1207(f)(1) and (g)(1) to document compliance with the affected emission standard(s) and establish operating parameter limits as required under § 63.1209, and submit to the Administrator a Notification of Compliance under §§ 63.1207(j) and 63.1210(d); and

(C) *Restriction on waste burning.* (1) Except as provided by paragraph (b)(5)(i)(C)(2) of this section, after the change and prior to submitting the notification of compliance, you must not burn hazardous waste for more than a total of 720 hours and only for purposes of pretesting or comprehensive performance testing.

(2) You may petition the Administrator to obtain written approval to burn hazardous waste in the interim prior to submitting a Notification of Compliance for purposes other than testing or pretesting. You must specify operating requirements, including limits on operating parameters, that you determine will ensure compliance with the emission standards of this subpart based on available information. The Administrator will review, modify as necessary, and approve if warranted the interim operating requirements.

(ii) *Changes that will not affect compliance.* If you determine that a change will not adversely affect compliance with the emission standards or operating requirements, you must document the change in the operating record upon making such change. You must revise as necessary the performance test plan, Documentation of Compliance, Notification of Compliance, and start-up, shutdown, and malfunction plan to reflect these changes.

(iii) *Definition of "change".* For purposes of paragraph (b)(6) of this section, "change" means any change in design, operation, or maintenance practices that were documented in the comprehensive performance test plan, Notification of Compliance, or startup, shutdown, and malfunction plan.

(6) *Compliance with the carbon monoxide and hydrocarbon emission standards.* This paragraph applies to sources that elect to comply with the carbon monoxide and hydrocarbon emissions standards under §§ 63.1203 through 63.1205 by documenting continuous compliance with the carbon monoxide standard using a continuous emissions monitoring system and documenting compliance with the hydrocarbon standard during the destruction and removal efficiency (DRE) performance test or its equivalent.

(i) If a DRE test performed after March 30, 1998 is acceptable as documentation of compliance with the DRE standard, you may use the highest hourly rolling average hydrocarbon level achieved during those DRE test runs to document compliance with the hydrocarbon standard. An acceptable DRE test is a test that was used to support successful issuance or reissuance of an operating permit under part 270 of this chapter.

(ii) If during this acceptable DRE test you did not obtain hydrocarbon emissions data sufficient to document compliance with the hydrocarbon standard, you must either:

(A) Perform, as part of the performance test, an "equivalent DRE test" to document compliance with the hydrocarbon standard. An equivalent DRE test is comprised of a minimum of three runs each with a minimum duration of one hour during which you operate the combustor as close as reasonably possible to the operating parameter limits that you established based on the initial DRE test. You must use the highest hourly rolling average hydrocarbon emission level achieved during the equivalent DRE test to document compliance with the hydrocarbon standard; or (B) Perform a DRE test as part of the performance test.

(7) *Compliance with the DRE standard.* (i) Except as provided in paragraphs (b)(7)(ii) and (b)(7)(iii) of this section:

(A) You must document compliance with the Destruction and Removal Efficiency (DRE) standard under §§ 63.1203 through 63.1205 only once provided that you do not modify the source after the DRE test in a manner that could affect the ability of the source to achieve the DRE standard; and

(B) You may use DRE testing performed after March 30, 1998 for purposes of issuance or reissuance of a RCRA permit under part 270 of this chapter to document conformance with the DRE standard if you have not modified the design or operation of the source since the DRE test in a manner that could affect the ability of the source to achieve the DRE standard.

(ii) For sources that feed hazardous waste at a location in the combustion system other than the normal flame zone:

(A) You must demonstrate compliance with the DRE standard during each comprehensive performance test; and

(B) You may use DRE testing performed after March 30, 1998 for purposes of issuance or reissuance of a RCRA permit under part 270 of this chapter to document conformance with the DRE standard in lieu of DRE testing during the initial comprehensive performance test if you have not modified the design or operation of the source since the DRE test in a manner that could affect the ability of the source to achieve the DRE standard.

(iii) For sources that do not use DRE testing performed prior to the compliance date to document conformance with the DRE standard, you must perform DRE testing during the initial comprehensive performance test.

(8) *Applicability of particulate matter and opacity standards during particulate matter CEMS correlation tests.* (i) Any particulate matter and opacity standards of parts 60, 61, 63, 264, 265, and 266 of this chapter (*i.e.*, any title 40 particulate or opacity standards) applicable to a hazardous waste combustor do not apply while you conduct particulate matter continuous emissions monitoring system (CEMS) correlation tests (*i.e.*, correlation with manual stack methods) under the conditions of paragraphs (b)(8)(iii) through (vii) of this section.

(ii) Any permit or other emissions or operating parameter limits or conditions, including any limitation on workplace practices, that are applicable to hazardous waste combustors to ensure compliance with any particulate matter and opacity standards of parts 60, 61, 63, 264, 265, and 266 of this chapter (*i.e.*, any title 40 particulate or opacity standards) do not apply while you conduct particulate matter CEMS correlation tests under the conditions of paragraphs (b)(8)(iii) through (vii) of this section.

(iii) For the provisions of this section to apply, you must:

(A) Develop a particulate matter CEMS correlation test plan that includes the following information. This test plan may be included as part of the comprehensive performance test plan required under §§ 63.1207(e) and (f):

(1) Number of test conditions and number of runs for each test condition;

(2) Target particulate matter emission level for each test condition;

(3) How you plan to modify operations to attain the desired particulate matter emission levels; and

(4) Anticipated normal particulate matter emission levels; and

(B) Submit the test plan to the Administrator for approval at least 90 calendar days before the correlation test is scheduled to be conducted.

(iv) The Administrator will review and approve/disapprove the correlation test plan under the procedures for review and approval of the site-specific test plan provided by § 63.7(c)(3)(i) and (iii). If the Administrator fails to approve or disapprove the correlation test plan within the time period specified by § 63.7(c)(3)(i), the plan is considered approved, unless the Administrator has requested additional information.

(v) The particulate matter and opacity standards and associated operating limits and conditions will not be waived for more than 96 hours, in the aggregate, for a correlation test, including all runs of all test conditions.

(vi) The stack sampling team must be on-site and prepared to perform correlation testing no later than 24 hours after you modify operations to attain the desired particulate matter emissions concentrations, unless you document in the correlation test plan that a longer period of conditioning is appropriate.

(vii) You must return to operating conditions indicative of compliance with the applicable particulate matter and opacity standards as soon as possible after correlation testing is completed.

(9) *Alternative standards for existing or new hazardous waste burning lightweight aggregate kilns using MACT.* (i) You may petition the Administrator to recommend alternative semivolatile metal, low volatile metal, mercury, or hydrochloric acid/chlorine gas emission standards if:

(A) You cannot achieve one or more of these standards while using maximum achievable control technology (MACT) because of the raw material contribution to emissions of the regulated metals or hydrochloric acid/chlorine gas; or

(B) You determine that mercury is not present at detectable levels in your raw material.

(ii) The alternative standard that you recommend under paragraph (b)(9)(i)(A) of this section may be an operating requirement, such as a hazardous waste feedrate limitation for metals and/or chlorine, and/or an emission limitation.

(iii) The alternative standard must include a requirement to use MACT, or better, applicable to the standard for which the source is seeking relief, as defined in paragraphs (b)(9)(viii) and (ix) of this section.

(iv) *Documentation required.* (A) The alternative standard petition you submit under paragraph (b)(9)(i)(A) of this section must include data or information documenting that raw material contributions to emissions of the regulated metals or hydrochloric acid/chlorine gas prevent you from complying with the emission standard even though the source is using MACT, as defined in paragraphs (b)(9)(viii) and (ix) of this section, for the standard for which you are seeking relief.

(B) Alternative standard petitions that you submit under paragraph (b)(9)(i)(B) of this section must include data or information documenting that mercury is not present at detectable levels in raw materials.

(v) You must include data or information with semivolatile metal and low volatility metal alternative standard petitions that you submit under paragraph (b)(9)(i)(A) of this section documenting that increased chlorine feedrates associated with the burning of hazardous waste, when compared to non-hazardous waste operations, do not significantly increase metal emissions attributable to raw materials.

(vi) You must include data or information with semivolatile metal, low volatile metal, and hydrochloric acid/chlorine gas alternative standard petitions that you submit under paragraph (b)(9)(i)(A) of this section documenting that semivolatile metal, low volatile metal, and hydrochloric acid/chlorine gas emissions attributable to the hazardous waste only will not exceed the emission standards in § 63.1205(a) and (b).

(vii) You must not operate pursuant to your recommended alternative standards in lieu of emission standards specified in § 63.1205(a) and (b):

(A) Unless the Administrator approves the provisions of the alternative standard petition request or establishes other alternative standards; and

(B) Until you submit a revised Notification of Compliance that incorporates the revised standards.

(viii) For purposes of this alternative standard provision, MACT for existing hazardous waste burning lightweight aggregate kilns is defined as:

(A) For mercury, a hazardous waste feedrate corresponding to an MTEC of 24μg/dscm or less;

(B) For semivolatile metals, a hazardous waste feedrate corresponding to an MTEC of 280,000 μg/dscm or less, and use of a particulate matter control device that achieves particulate matter emissions of 57 mg/dscm or less;

(C) For low volatile metals, a hazardous waste feedrate corresponding to an MTEC of 120,000 μg/dscm or less, and use of a particulate matter control

device that achieves particulate matter emissions of 57 mg/dscm or less; and

(D) For hydrochloric acid/chlorine gas, a hazardous waste chlorine feedrate corresponding to an MTEC of 2,000,000 µg/dscm or less, and use of an air pollution control device with a hydrochloric acid/chlorine gas removal efficiency of 85 percent or greater.

(ix) For purposes of this alternative standard provision, MACT for new hazardous waste burning lightweight aggregate kilns is defined as:

(A) For mercury, a hazardous waste feedrate corresponding to an MTEC of 4 µg/dscm or less;

(B) For semivolatile metals, a hazardous waste feedrate corresponding to an MTEC of 280,000 µg/dscm or less, and use of a particulate matter control device that achieves particulate matter emissions of 57 mg/dscm or less;

(C) For low volatile metals, a hazardous waste feedrate corresponding to an MTEC of 46,000 µg/dscm or less, and use of a particulate matter control device that achieves particulate matter emissions of 57 mg/dscm or less;

(D) For hydrochloric acid/chlorine gas, a hazardous waste chlorine feedrate corresponding to an MTEC of 14,000,000 µg/dscm or less, and use of a wet scrubber with a hydrochloric acid/chlorine gas removal efficiency of 99.6 percent or greater.

(10) *Alternative standards for existing or new hazardous waste burning cement kilns using MACT.* (i) You may petition the Administrator to recommend alternative semivolatile, low volatile metal, mercury, and/or hydrochloric acid/chlorine gas emission standards if:

(A) You cannot achieve one or more of these standards while using maximum achievable control technology (MACT) because of raw material contributions to emissions of the regulated metals or hydrochloric acid/chlorine gas; or (B) You determine that mercury is not present at detectable levels in your raw material.

(ii) The alternative standard that you recommend under paragraph (b)(10)(i)(A) of this section may be an operating requirement, such as a hazardous waste feedrate limitation for metals and/or chlorine, and/or an emission limitation.

(iii) The alternative standard must include a requirement to use MACT, or better, applicable to the standard for which the source is seeking relief, as defined in paragraphs (b)(10)(viii) and (ix) of this section.

(iv) *Documentation required.* (A) The alternative standard petition you submit under paragraph (b)(10)(i)(A) of this section must include data or information documenting that raw material contributions to emissions prevent you from complying with the emission standard even though the source is using MACT, as defined in paragraphs (b)(10)(viii) and (ix) of this section, for the standard for which you are seeking relief.

(B) Alternative standard petitions that you submit under paragraph (b)(10)(i)(B) of this section must include data or information documenting that mercury is not present at detectable levels in raw materials.

(v) You must include data or information with semivolatile metal and low volatile metal alternative standard petitions that you submit under paragraph (b)(10)(i)(A) of this section documenting that increased chlorine feedrates associated with the burning of hazardous waste, when compared to non-hazardous waste operations, do not significantly increase metal emissions attributable to raw materials.

(vi) You must include data or information with semivolatile metal, low volatile metal, and hydrochloric acid/chlorine gas alternative standard petitions that you submit under paragraph (b)(10)(i)(A) of this section documenting that emissions of the regulated metals and hydrochloric acid/chlorine gas attributable to the hazardous waste only will not exceed the emission standards in § 63.1204(a) and (b).

(vii) You must not operate pursuant to your recommended alternative standards in lieu of emission standards specified in § 63.1204(a) and (b):

(A) Unless the Administrator approves the provisions of the alternative standard petition request or establishes other alternative standards; and

(B) Until you submit a revised Notification of Compliance that incorporates the revised standards.

(viii) For purposes of this alternative standard provision, MACT for existing hazardous waste burning cement kilns is defined as:

(A) For mercury, a hazardous waste feedrate corresponding to an MTEC of 88µg/dscm or less;

(B) For semivolatile metals, a hazardous waste feedrate corresponding to an MTEC of 31,000 µg/dscm or less, and use of a particulate matter control device that achieves particulate matter emissions of 0.15 kg/Mg dry feed or less;

(C) For low volatile metals, a hazardous waste feedrate corresponding to an MTEC of 54,000 µg/dscm or less, and use of a particulate matter control device that achieves particulate matter emissions of 0.15 kg/Mg dry feed or less; and

(D) For hydrochloric acid/chlorine gas, a hazardous waste chlorine feedrate corresponding to an MTEC of 720,000 µg/dscm or less.

(ix) For purposes of this alternative standard provision, MACT for new hazardous waste burning cement kilns is defined as:

(A) For mercury, a hazardous waste feedrate corresponding to an MTEC of 7 µg/dscm or less;

(B) For semivolatile metals, a hazardous waste feedrate corresponding to an MTEC of 31,000 µg/dscm or less, and use of a particulate matter control device that achieves particulate matter emissions of 0.15 kg/Mg dry feed or less;

(C) For low volatile metals, a hazardous waste feedrate corresponding to an MTEC of 15,000 µg/dscm or less, and use of a particulate matter control device that achieves particulate matter emissions of 0.15 kg/Mg dry feed or less;

(D) For hydrochloric acid/chlorine gas, a hazardous waste chlorine feedrate corresponding to an MTEC of 420,000 µg/dscm or less.

(11) *Calculation of hazardous waste residence time.* You must calculate the hazardous waste residence time and include the calculation in the performance test plan under § 63.1207(f) and the operating record. You must also provide the hazardous waste residence time in the Documentation of Compliance under § 63.1211(d) and the Notification of Compliance under §§ 63.1207(j) and 63.1210(d).

(12) *Documenting compliance with the standards based on performance testing.* (i) You must conduct a minimum of three runs of a performance test required under § 63.1207 to document compliance with the emission standards of this subpart.

(ii) You must document compliance with the emission standards based on the arithmetic average of the emission results of each run, except that you must document compliance with the destruction and removal efficiency standard for each run of the comprehensive performance test individually.

(13) *Cement kilns and lightweight aggregate kilns that feed hazardous waste at a location other than the end where products are normally discharged and where fuels are normally fired.* (i) Cement kilns that feed hazardous waste at a location other than the end where products are normally discharged and where fuels are normally fired must comply with the hydrocarbon standards of § 63.1204 as follows:

(A) Existing sources must comply with the 20 parts per million by volume hydrocarbon standard in the main stack under § 63.1204(a)(5)(ii)(A);

(B) New sources must comply with the 20 parts per million by volume hydrocarbon standard in the main stack under § 63.1204(b)(5)(ii)(A).

(ii) Lightweight aggregate kilns that feed hazardous waste at a location other than the end where products are normally discharged and where fuels are normally fired must comply with the hydrocarbon standards of § 63.1205 as follows:

(A) Existing sources must comply with the 20 parts per million by volume hydrocarbon standard under § 63.1205(a)(5)(ii);

(B) New sources must comply with the 20 parts per million by volume hydrocarbon standard under § 63.1205(b)(5)(ii).

(14) *Alternative particulate matter standard for incinerators with de minimis metals.* (i) *General.* You may petition the Administrator for an alternative particulate matter standard of 68 mg/dscm, corrected to 7% oxygen, if you meet the *de minimis* metals criteria of paragraph (b)(14)(ii) of this section.

(ii) *Documentation required.* The alternative standard petition you submit under paragraph (b)(14)(i) of this section must include data or information documenting that:

(A) Your feedstreams do not contain detectable levels of antimony, cobalt, manganese, nickel, selenium, lead, cadmium, chromium, arsenic and beryllium;

(B) Your combined uncontrolled lead, cadmium and selenium emissions, when assuming these metals are present in your feedstreams at one-half the detection limit, are below 240 ug/dscm, corrected to 7% oxygen.

(C) Your combined uncontrolled antimony, cobalt, manganese, nickel, chromium, arsenic and beryllium emissions, when assuming these metals are present in your feedstreams at one-half the detection limit, are below 97 ug/dscm, corrected to 7% oxygen.

(iii) *Frequency of analysis.* You must sample and analyze your feedstreams at least annually to document that you meet the de minimis criteria in paragraph (b)(14)(ii) of this section.

(iv) You must not operate pursuant to this alternative standard unless the Administrator determines and provides written confirmation that you meet the eligibility requirements in paragraph (b)(14)(ii) of this section.

(c) *Operating requirements.*—(1) *General.* (i) You must operate only under the operating requirements specified in the Documentation of Compliance under § 63.1211(d) or the Notification of Compliance under §§ 63.1207(j) and 63.1210(d), except:

(A) During performance tests under approved test plans according to § 63.1207(e), (f), and (g), and

(B) Under the conditions of paragraph (b)(1)(i) or (ii) of this section;

(ii) The Documentation of Compliance and the Notification of Compliance must contain operating requirements including, but not limited to, the operating requirements in this section and § 63.1209

(iii) Failure to comply with the operating requirements is failure to ensure compliance with the emission standards of this subpart;

(iv) Operating requirements in the Notification of Compliance are applicable requirements for purposes of parts 70 and 71 of this chapter;

(v) The operating requirements specified in the Notification of Compliance will be incorporated in the title V permit.

(2) *Startup, shutdown, and malfunction plan.* (i) Except as provided by paragraph (c)(2)(ii) of this section, you are subject to the startup, shutdown, and malfunction plan requirements of § 63.6(e)(3).

(ii) Even if you follow the startup and shutdown procedures and the corrective measures upon a malfunction that are prescribed in the startup, shutdown, and malfunction plan, the emission standards and operating requirements of this subpart apply if hazardous waste is in the combustion chamber (*i.e.*, if you are feeding hazardous waste or if startup, shutdown, or a malfunction occurs before the hazardous waste residence time has transpired after hazardous waste cutoff).

(iii) You must identify in the plan a projected oxygen correction factor based on normal operations to use during periods of startup and shutdown.

(iv) You must record the plan in the operating record.

(3) *Automatic waste feed cutoff (AWFCO).*— (i) *General.* Upon the compliance date, you must operate the hazardous waste combustor with a functioning system that immediately and automatically cuts off the hazardous waste feed, except as provided by paragraph (c)(3)(viii) of this section:

(A) When any of the following are exceeded: Operating parameter limits specified under § 63.1209; an emission standard monitored by a CEMS; and the allowable combustion chamber pressure;

(B) When the span value of any CMS detector, except a CEMS, is met or exceeded;

(C) Upon malfunction of a CMS monitoring an operating parameter limit specified under § 63.1209 or an emission level; or

(D) When any component of the automatic waste feed cutoff system fails.

(ii) *Ducting of combustion gases.* During an AWFCO, you must continue to duct combustion gasses to the air pollution control system while hazardous waste remains in the combustion chamber (*i.e.*, if the hazardous waste residence time has not transpired since the hazardous waste feed cutoff system was activated).

(iii) *Restarting waste feed.* You must continue to monitor during the cutoff the operating parameters for which limits are established under § 63.1209 and the emissions required under that section to be monitored by a CEMS, and you must not restart the hazardous waste feed until the operating parameters and emission levels are within the specified limits.

(iv) *Failure of the AWFCO system.* If the AWFCO system fails to automatically and immediately cutoff the flow of hazardous waste upon exceedance of parameter required to be interlocked with the AWFCO system under paragraph (c)(3)(i) of this section, you have failed to comply with the AWFCO requirements of paragraph (c)(3) of this section.

(v) *Corrective measures.* If, after any AWFCO, there is an exceedance of an emission standard or operating requirement, irrespective of whether the exceedance occurred while hazardous waste remained in the combustion chamber (*i.e.*, whether the hazardous waste residence time has transpired since the hazardous waste feed cutoff system was activated), you must investigate the cause of the AWFCO, take appropriate corrective measures to minimize future AWFCOs, and record the findings and corrective measures in the operating record.

(vi) *Excessive exceedance reporting.* (A) For each set of 10 exceedances of an emission standard or operating requirement while hazardous waste remains in the combustion chamber (*i.e.*, when the hazardous waste residence time has not transpired since the hazardous waste feed was cutoff) during a 60-day block period, you must submit to the Administrator a written report within 5 calendar days of the 10th exceedance documenting the exceedances and results of the investigation and corrective measures taken.

(B) On a case-by-case basis, the Administrator may require excessive exceedance reporting when fewer than 10 exceedances occur during a 60-day block period.

(vii) *Testing.* The AWFCO system and associated alarms must be tested at least weekly to verify operability, unless you

document in the operating record that weekly inspections will unduly restrict or upset operations and that less frequent inspection will be adequate. At a minimum, you must conduct operability testing at least monthly. You must document and record in the operating record AWFCO operability test procedures and results.

(viii) *Ramping down waste feed.* (A) You may ramp down the waste feedrate of pumpable hazardous waste over a period not to exceed one minute, except as provided by paragraph (c)(3)(viii)(B) of this section. If you elect to ramp down the waste feed, you must document ramp down procedures in the operating and maintenance plan. The procedures must specify that the ramp down begins immediately upon initiation of automatic waste feed cutoff and the procedures must prescribe a bona fide ramping down. If an emission standard or operating limit is exceeded during the ramp down, you have failed to comply with the emission standards or operating requirements of this subpart.

(B) If the automatic waste feed cutoff is triggered by an exceedance of any of the following operating limits, you may not ramp down the waste feed cutoff: Minimum combustion chamber temperature, maximum hazardous waste feedrate, or any hazardous waste firing system operating limits that may be established for your combustor.

(4) *ESV openings.*—(i) *Failure to meet standards.* If an emergency safety vent (ESV) opens when hazardous waste remains in the combustion chamber (*i.e.*, when the hazardous waste residence time has not transpired since the hazardous waste feed cutoff system was activated) such that combustion gases are not treated as during the most recent comprehensive performance test (*e.g.*, if the combustion gas by-passes any emission control device that was operating during the performance test), it is evidence of your failure to comply with the emission standards of this subpart.

(ii) *ESV operating plan.* (A) You must develop an ESV operating plan, comply with the operating plan, and keep the plan in the operating record.

(B) The ESV operating plan must provide detailed procedures for rapidly stopping the waste feed, shutting down the combustor, and maintaining temperature and negative pressure in the combustion chamber during the hazardous waste residence time, if feasible. The plan must include calculations and information and data documenting the effectiveness of the plan's procedures for ensuring that combustion chamber temperature and negative pressure are maintained as is reasonably feasible.

(iii) *Corrective measures.* After any ESV opening that results in a failure to meet the emission standards as defined in paragraph (c)(4)(i) of this section, you must investigate the cause of the ESV opening, take appropriate corrective measures to minimize such future ESV openings, and record the findings and corrective measures in the operating record.

(iv) *Reporting requirement.* You must submit to the Administrator a written report within 5 days of an ESV opening that results in failure to meet the emission standards of this subpart (as defined in paragraph (c)(4)(i) of this section) documenting the result of the investigation and corrective measures taken.

(5) *Combustion system leaks.* (i) Combustion system leaks of hazardous air pollutants must be controlled by:

(A) Keeping the combustion zone sealed to prevent combustion system leaks; or

(B) Maintaining the maximum combustion zone pressure lower than ambient pressure using an instantaneous monitor; or

(C) Upon prior written approval of the Administrator, an alternative means of control to provide control of combustion system leaks equivalent to maintenance of combustion zone pressure lower than ambient pressure; and

(ii) You must specify in the operating record the method used for control of combustion system leaks.

(6) *Operator training and certification.* (i) You must establish a training and certification program for each person who has responsibilities affecting operations that may affect emissions of hazardous air pollutants from the source. Such persons include, but are not limited to, chief facility operators, control room operators, continuous monitoring system operators, persons that sample and analyze feedstreams, persons that manage and charge feedstreams to the combustor, persons that operate emission control devices, ash and waste handlers, and maintenance personnel.

(ii) You must ensure that the source is operated and maintained at all times by persons who are trained and certified to perform these and any other duties that may affect emissions of hazardous air pollutants.

(iii) For hazardous waste incinerators, the training and certification program must conform to a state-approved training and certification program or, if there is no such state program, to the American Society of Mechanical Engineers Standard Number QHO-1-1994.

(iv) For hazardous waste burning cement and lightweight aggregate kilns, the training and certification program must be approved by the state or the Administrator, and must be complete and reliable and conform to principles of good operator and operating practices (including training and certification).

(v) You must record the operator training and certification program in the operating record.

(7) *Operation and maintenance plan.*—(i) *General.* (A) You must prepare and at all times operate according to an operation and maintenance plan that describes in detail procedures for operation, inspection, maintenance, and corrective measures for all components of the combustor, including associated pollution control equipment, that could affect emissions of regulated hazardous air pollutants.

(B) The plan must prescribe how you will operate and maintain the combustor in a manner consistent with good air pollution control practices for minimizing emissions at least to the levels achieved during the comprehensive performance test.

(C) This plan ensures compliance with the operation and maintenance requirements of § 63.6(e) and minimizes emissions of pollutants, automatic waste feed cutoffs, and malfunctions.

(D) You must record the plan in the operating record.

(ii) *Requirements for baghouses at lightweight aggregate kilns and incinerators.* If you own or operate a hazardous waste incinerator or hazardous waste burning lightweight aggregate kiln equipped with a baghouse (fabric filter), you must prepare and at all times operate according to an operations and maintenance plan that describes in detail procedures for inspection, maintenance, and bag leak detection and corrective measures for each baghouse used to comply with the standards under this subpart.

(A) The operation and maintenance plan for baghouses must be submitted to the Administrator with the initial comprehensive performance test plan for review and approval.

(B) The procedures specified in the operations and maintenance plan for inspections and routine maintenance of a baghouse must, at a minimum, include the following requirements:

(*1*) Daily visual observation of baghouse discharge or stack;

(*2*) Daily confirmation that dust is being removed from hoppers through visual inspection, or equivalent means

of ensuring the proper functioning of removal mechanisms;

(3) Daily check of compressed air supply for pulse-jet baghouses;

(4) Daily visual inspection of isolation dampers for proper operation;

(5) An appropriate methodology for monitoring cleaning cycles to ensure proper operation;

(6) Weekly check of bag cleaning mechanisms for proper functioning through visual inspection or equivalent means;

(7) Weekly check of bag tension on reverse air and shaker-type baghouses. Such checks are not required for shaker-type baghouses using self-tensioning (spring loaded) devices;

(8) Monthly confirmation of the physical integrity of the baghouse through visual inspection of the baghouse interior for air leaks;

(9) Monthly inspection of bags and bag connections;

(10) Quarterly inspection of fans for wear, material buildup, and corrosion through visual inspection, vibration detectors, or equivalent means; and

(11) Continuous operation of a bag leak detection system as a continuous monitor.

(C) The procedures for maintenance specified in the operation and maintenance plan must, at a minimum, include a preventative maintenance schedule that is consistent with the baghouse manufacturer's instructions for routine and long-term maintenance.

(D) The bag leak detection system required by paragraph (c)(7)(ii)(B)(11) of this section must meet the following specifications and requirements:

(1) The bag leak detection system must be certified by the manufacturer to be capable of continuously detecting and recording particulate matter emissions at concentrations of 1.0 milligram per actual cubic meter or less;

(2) The bag leak detection system sensor must provide output of relative particulate matter loadings;

(3) The bag leak detection system must be equipped with an alarm system that will sound an audible alarm when an increase in relative particulate loadings is detected over a preset level;

(4) The bag leak detection system shall be installed and operated in a manner consistent with available written guidance from the U.S. Environmental Protection Agency or, in the absence of such written guidance, the manufacturer's written specifications and recommendations for installation, operation, and adjustment of the system;

(5) The initial adjustment of the system shall, at a minimum, consist of establishing the baseline output by adjusting the sensitivity (range) and the averaging period of the device, and establishing the alarm set points and the alarm delay time;

(6) Following initial adjustment, you must not adjust the sensitivity or range, averaging period, alarm set points, or alarm delay time, except as detailed in the operation and maintenance plan required under paragraph (c)(7)(ii)(A) of this section. You must not increase the sensitivity by more than 100 percent or decrease the sensitivity by more than 50 percent over a 365 day period unless such adjustment follows a complete baghouse inspection which demonstrates the baghouse is in good operating condition;

(7) For negative pressure or induced air baghouses, and positive pressure baghouses that are discharged to the atmosphere through a stack, the bag leak detector must be installed downstream of the baghouse and upstream of any wet acid gas scrubber; and

(8) Where multiple detectors are required, the system's instrumentation and alarm system may be shared among the detectors.

(E) The operation and maintenance plan required by paragraph (c)(7)(ii) of this section must include a corrective measures plan that specifies the procedures you will follow in the case of a bag leak detection system alarm. The corrective measures plan must include, at a minimum, the procedures used to determine and record the time and cause of the alarm as well as the corrective measures taken to correct the control device malfunction or minimize emissions as specified below. Failure to initiate the corrective measures required by this paragraph is failure to ensure compliance with the emission standards in this subpart.

(1) You must initiate the procedures used to determine the cause of the alarm within 30 minutes of the time the alarm first sounds; and

(2) You must alleviate the cause of the alarm by taking the necessary corrective measure(s) which may include, but are not to be limited to, the following measures:

(i) Inspecting the baghouse for air leaks, torn or broken filter elements, or any other malfunction that may cause an increase in emissions;

(ii) Sealing off defective bags or filter media;

(iii) Replacing defective bags or filter media, or otherwise repairing the control device;

(iv) Sealing off a defective baghouse compartment;

(v) Cleaning the bag leak detection system probe, or otherwise repairing the bag leak detection system; or

(vi) Shutting down the combustor.

§ 63.1207 What are the performance testing requirements?

(a) *General.* The provisions of § 63.7 apply, except as noted below.

(b) *Types of performance tests*—(1) *Comprehensive performance test.* You must conduct comprehensive performance tests to demonstrate compliance with the emission standards provided by §§ 63.1203, 63.1204, and 63.1205, establish limits for the operating parameters provided by § 63.1209, and demonstrate compliance with the performance specifications for continuous monitoring systems.

(2) *Confirmatory performance test.* You must conduct confirmatory performance tests to:

(i) Demonstrate compliance with the dioxin/furan emission standard when the source operates under normal operating conditions; and

(ii) Conduct a performance evaluation of continuous monitoring systems required for compliance assurance with the dioxin/furan emission standard under § 63.1209(k).

(c) *Initial comprehensive performance test*—(1) *Test date.* Except as provided by paragraph (c)(2) of this section, you must commence the initial comprehensive performance test not later than six months after the compliance date.

(2) *Data in lieu of the initial comprehensive performance test.* (i) You may request that previous emissions test data serve as documentation of conformance with the emission standards of this subpart provided that the previous testing was:

(A) Initiated after March 30, 1998;

(B) For the purpose of demonstrating emissions under a RCRA permit issuance or reissuance proceeding under part 270 of this chapter;

(C) In conformance with the requirements of paragraph (g)(1) of this section; and

(D) Sufficient to establish the applicable operating parameter limits under § 63.1209.

(ii) You must submit data in lieu of the initial comprehensive performance test in lieu of (i.e., if the data are in lieu of all performance testing) or with the notification of performance test required under paragraph (e) of this section.

(d) *Frequency of testing.* You must conduct testing periodically as prescribed in paragraphs (d)(1) through (3) of this section. The date of commencement of the initial comprehensive performance test is the basis for establishing the deadline to commence the initial confirmatory performance test and the next

comprehensive performance test. You may conduct performance testing at any time prior to the required date. The deadline for commencing subsequent confirmatory and comprehensive performance testing is based on the date of commencement of the previous comprehensive performance test. Unless the Administrator grants a time extension under paragraph (i) of this section, you must conduct testing as follows:

(1) *Comprehensive performance testing.* You must commence testing no later than 61 months after the date of commencing the previous comprehensive performance test. If you submit data in lieu of the initial performance test, you must commence the subsequent comprehensive performance test within 61 months of the date six months after the compliance date.

(2) *Confirmatory performance testing.* You must commence confirmatory performance testing no later than 31 months after the date of commencing the previous comprehensive performance test. If you submit data in lieu of the initial performance test, you must commence the initial confirmatory performance test within 31 months of the date six months after the compliance date. To ensure that the confirmatory test is conducted approximately midway between comprehensive performance tests, the Administrator will not approve a test plan that schedules testing within 18 months of commencing the previous comprehensive performance test.

(3) *Duration of testing.* You must complete performance testing within 60 days after the date of commencement, unless the Administrator determines that a time extension is warranted based on your documentation in writing of factors beyond your control that prevent you from meeting the 60-day deadline.

(e) *Notification of performance test and CMS performance evaluation, and approval of test plan and CMS performance evaluation plan.* (1) The provisions of § 63.7(b) and (c) and § 63.8(e) apply, except:

(i) *Comprehensive performance test.* You must submit to the Administrator a notification of your intention to conduct a comprehensive performance test and CMS performance evaluation and a site-specific test plan and CMS performance evaluation plan at least one year before the performance test and performance evaluation are scheduled to begin.

(A) The Administrator will notify you of approval or intent to deny approval of the test plan and CMS performance evaluation plan within 9 months after receipt of the original plan.

(B) You must submit to the Administrator a notification of your intention to conduct the comprehensive performance test at least 60 calendar days before the test is scheduled to begin.

(ii) *Confirmatory performance test.* You must submit to the Administrator a notification of your intention to conduct a confirmatory performance test and CMS performance evaluation and a test plan and CMS performance evaluation plan at least 60 calendar days before the performance test is scheduled to begin. The Administrator will notify you of approval or intent to deny approval of the test and CMS performance evaluation plans within 30 calendar days after receipt of the original plans.

(2) After the Administrator has approved the test and CMS performance evaluation plans, you must make the plans available to the public for review. You must issue a public notice announcing the approval of the plans and the location where the plans are available for review.

(f) *Content of performance test plan.* The provisions of §§ 63.7(c)(2)(i)–(iii) and (v) regarding the content of the test plan apply. In addition, you must include the following information in the test plan:

(1) *Content of comprehensive performance test plan.* (i) An analysis of each feedstream, including hazardous waste, other fuels, and industrial furnace feedstocks, as fired, that includes:

(A) Heating value, levels of ash (for hazardous waste incinerators only), levels of semivolatile metals, low volatile metals, mercury, and total chlorine (organic and inorganic); and

(B) Viscosity or description of the physical form of the feedstream;

(ii) For organic hazardous air pollutants established by 42 U.S.C. 7412(b)(1), excluding caprolactam (CAS number 105602) as provided by § 63.60:

(A) An identification of such organic hazardous air pollutants that are present in the feedstream, except that you need not analyze for organic hazardous air pollutants that would reasonably not be expected to be found in the feedstream. You must identify any constituents you exclude from analysis and explain the basis for excluding them. You must conduct the feedstream analysis according to § 63.1208(g);

(B) An approximate quantification of such identified organic hazardous air pollutants in the feedstreams, within the precision produced by the analytical procedures of § 63.1208(g); and

(C) A description of blending procedures, if applicable, prior to firing the feedstream, including a detailed analysis of the materials prior to blending, and blending ratios;

(iii) A detailed engineering description of the hazardous waste combustor, including:

(A) Manufacturer's name and model number of the hazardous waste combustor;

(B) Type of hazardous waste combustor;

(C) Maximum design capacity in appropriate units;

(D) Description of the feed system for each feedstream;

(E) Capacity of each feed system;

(F) Description of automatic hazardous waste feed cutoff system(s);

(G) Description of the design, operation, and maintenance practices for any air pollution control system; and

(H) Description of the design, operation, and maintenance practices of any stack gas monitoring and pollution control monitoring systems;

(iv) A detailed description of sampling and monitoring procedures including sampling and monitoring locations in the system, the equipment to be used, sampling and monitoring frequency, and planned analytical procedures for sample analysis;

(v) A detailed test schedule for each hazardous waste for which the performance test is planned, including date(s), duration, quantity of hazardous waste to be burned, and other relevant factors;

(vi) A detailed test protocol, including, for each hazardous waste identified, the ranges of hazardous waste feedrate for each feed system, and, as appropriate, the feedrates of other fuels and feedstocks, and any other relevant parameters that may affect the ability of the hazardous waste combustor to meet the emission standards;

(vii) A description of, and planned operating conditions for, any emission control equipment that will be used;

(viii) Procedures for rapidly stopping the hazardous waste feed and controlling emissions in the event of an equipment malfunction;

(ix) A determination of the hazardous waste residence time;

(x) If you are requesting to extrapolate metal feedrate limits from comprehensive performance test levels:

(A) A description of the extrapolation methodology and rationale for how the approach ensures compliance with the emission standards;

(B) Documentation of the historical range of normal (*i.e.*, other than during compliance testing) metals feedrates for each feedstream;

(C) Documentation that the level of spiking recommended during the

performance test will mask sampling and analysis imprecision and inaccuracy to the extent that extrapolation of feedrates and emission rates from performance test data will be as accurate and precise as if full spiking were used;

(xi) If you do not continuously monitor regulated constituents in natural gas, process air feedstreams, and feedstreams from vapor recovery systems, you must include documentation of the expected levels of regulated constituents in those feedstreams;

(xii) Documentation justifying the duration of system conditioning required to ensure the combustor has achieved steady-state operations under performance test operating conditions, as provided by paragraph (g)(1)(iii) of this section; and

(xiii) Such other information as the Administrator reasonably finds necessary to determine whether to approve the performance test plan.

(2) *Content of confirmatory test plan.* (i) A description of your normal hydrocarbon or carbon monoxide operating levels, as specified in paragraph (g)(2)(i) of this section, and an explanation of how these normal levels were determined;

(ii) A description of your normal applicable operating parameter levels, as specified in paragraph (g)(2)(ii) of this section, and an explanation of how these normal levels were determined;

(iii) A description of your normal chlorine operating levels, as specified in paragraph (g)(2)(iii) of this section, and an explanation of how these normal levels were determined;

(iv) If you use carbon injection or a carbon bed, a description of your normal cleaning cycle of the particulate matter control device, as specified in paragraph (g)(2)(iv) of this section, and an explanation of how these normal levels were determined;

(v) A detailed description of sampling and monitoring procedures including sampling and monitoring locations in the system, the equipment to be used, sampling and monitoring frequency, and planned analytical procedures for sample analysis;

(vi) A detailed test schedule for each hazardous waste for which the performance test is planned, including date(s), duration, quantity of hazardous waste to be burned, and other relevant factors;

(vii) A detailed test protocol, including, for each hazardous waste identified, the ranges of hazardous waste feedrate for each feed system, and, as appropriate, the feedrates of other fuels and feedstocks, and any other relevant parameters that may affect the ability of the hazardous waste combustor to meet the dioxin/furan emission standard;

(viii) A description of, and planned operating conditions for, any emission control equipment that will be used;

(ix) Procedures for rapidly stopping the hazardous waste feed and controlling emissions in the event of an equipment malfunction; and

(x) Such other information as the Administrator reasonably finds necessary to determine whether to approve the confirmatory test plan.

(g) *Operating conditions during testing.* You must comply with the provisions of § 63.7(e). Conducting performance testing under operating conditions representative of the extreme range of normal conditions is consistent with the requirement of § 63.7(e)(1) to conduct performance testing under representative operating conditions.

(1) *Comprehensive performance testing.*—(i) *Operations during testing.* For the following parameters, you must operate the combustor during the performance test under normal conditions (or conditions that will result in higher than normal emissions):

(A) *Chlorine feedrate.* You must feed normal (or higher) levels of chlorine during the dioxin/furan performance test;

(B) *Ash feedrate.* For hazardous waste incinerators, you must conduct the following tests when feeding normal (or higher) levels of ash: The semivolatile metal and low volatile metal performance tests; and the dioxin/furan and mercury performance tests if activated carbon injection or a carbon bed is used; and

(C) *Cleaning cycle of the particulate matter control device.* You must conduct the following tests when the particulate matter control device undergoes its normal (or more frequent) cleaning cycle: The particulate matter, semivolatile metal, and low volatile metal performance tests; and the dioxin/furan and mercury performance tests if activated carbon injection or a carbon bed is used.

(ii) *Modes of operation.* Given that you must establish limits for the applicable operating parameters specified in § 63.1209 based on operations during the comprehensive performance test, you may conduct testing under two or more operating modes to provide operating flexibility.

(iii) *Steady-state conditions.* (A) Prior to obtaining performance test data, you must operate under performance test conditions until you reach steady-state operations with respect to emissions of pollutants you must measure during the performance test and operating parameters under § 63.1209 for which you must establish limits. During system conditioning, you must ensure that each operating parameter for which you must establish a limit is held at the level planned for the performance test. You must include documentation in the performance test plan under paragraph (f) of this section justifying the duration of system conditioning.

(B) If you own or operate a hazardous waste cement kiln that recycles collected particulate matter (*i.e.*, cement kiln dust) into the kiln, you must sample and analyze the recycled particulate matter prior to obtaining performance test data for levels of selected metals that must be measured during performance testing to document that the system has reached steady-state conditions (*i.e.*, that metals levels have stabilized). You must document the rationale for selecting metals that are indicative of system equilibrium and include the information in the performance test plan under paragraph (f) of this section. To determine system equilibrium, you must sample and analyze the recycled particulate matter hourly for each selected metal, unless you submit in the performance test plan a justification for reduced sampling and analysis and the Administrator approves in writing a reduced sampling and analysis frequency.

(2) *Confirmatory performance testing.* You must conduct confirmatory performance testing for dioxin/furan under normal operating conditions for the following parameters:

(i) Carbon monoxide (or hydrocarbon) CEMS emission levels must be within the range of the average value to the maximum value allowed. The average value is defined as the sum of the hourly rolling average values recorded (each minute) over the previous 12 months divided by the number of rolling averages recorded during that time;

(ii) Each operating limit (specified in § 63.1209) established to maintain compliance with the dioxin/furan emission standard must be held within the range of the average value over the previous 12 months and the maximum or minimum, as appropriate, that is allowed. The average value is defined as the sum of the rolling average values recorded over the previous 12 months divided by the number of rolling averages recorded during that time. The average value must not include calibration data, malfunction data, and data obtained when not burning hazardous waste;

(iii) You must feed chlorine at normal feedrates or greater; and (iv) If the

combustor is equipped with carbon injection or carbon bed, normal cleaning cycle of the particulate matter control device.

(h) *Operating conditions during subsequent testing.* (1) Current operating parameter limits established under § 63.1209 are waived during subsequent comprehensive performance testing under an approved test plan.

(2) Current operating parameter limits are also waived during pretesting prescribed in the approved test plan prior to comprehensive performance testing for an aggregate time not to exceed 720 hours of operation. Pretesting means:

(i) Operations when stack emissions testing for dioxin/furan, mercury, semivolatile metals, low volatile metals, particulate matter, or hydrochloric acid/chlorine gas is being performed; and

(ii) Operations to reach steady-state operating conditions prior to stack emissions testing under paragraph (g)(1)(iii) of this section.

(i) *Time extension for subsequent performance tests.* After the initial comprehensive performance test, you may request up to a one-year time extension for conducting a comprehensive or confirmatory performance test to consolidate performance testing with other state or federally required emission testing, or for other reasons deemed acceptable by the Administrator. If the Administrator grants a time extension for a comprehensive performance test, the deadlines for commencing the next comprehensive and confirmatory tests are based on the date that the subject comprehensive performance test commences.

(1) You must submit in writing to the Administrator any request under this paragraph for a time extension for conducting a performance test.

(2) You must include in the request for an extension for conducting a performance test the following:

(i) A description of the reasons for requesting the time extension;

(ii) The date by which you will commence performance testing.

(3) The Administrator will notify you in writing of approval or intention to deny approval of your request for an extension for conducting a performance test within 30 calendar days after receipt of sufficient information to evaluate your request. The 30-day approval or denial period will begin after you have been notified in writing that your application is complete. The Administrator will notify you in writing whether the application contains sufficient information to make a determination within 30 calendar days after receipt of the original application and within 30 calendar days after receipt of any supplementary information that you submit.

(4) When notifying you that your application is not complete, the Administrator will specify the information needed to complete the application. The Administrator will also provide notice of opportunity for you to present, in writing, within 30 calendar days after notification of the incomplete application, additional information or arguments to the Administrator to enable further action on the application.

(5) Before denying any request for an extension for performance testing, the Administrator will notify you in writing of the Administrator's intention to issue the denial, together with:

(i) Notice of the information and findings on which the intended denial is based; and

(ii) Notice of opportunity for you to present in writing, within 15 calendar days after notification of the intended denial, additional information or arguments to the Administrator before further action on the request.

(6) The Administrator's final determination to deny any request for an extension will be in writing and will set forth specific grounds upon which the denial is based. The final determination will be made within 30 calendar days after the presentation of additional information or argument (if the application is complete), or within 30 calendar days after the final date specified for the presentation if no presentation is made.

(j) *Notification of compliance.*—(1) *Comprehensive performance test.* (i) Except as provided by paragraph (j)(4) of this section, within 90 days of completion of a comprehensive performance test, you must postmark a Notification of Compliance documenting compliance or noncompliance with the emission standards and continuous monitoring system requirements, and identifying operating parameter limits under § 3.1209.

(ii) Upon postmark of the Notification of Compliance, you must comply with all operating requirements specified in the Notification of Compliance in lieu of the limits specified in the Documentation of Compliance required under § 63.1211(d).

(2) *Confirmatory performance test.* Except as provided by paragraph (j)(4) of this section, within 90 days of completion of a confirmatory performance test, you must postmark a Notification of Compliance documenting compliance or noncompliance with the applicable dioxin/furan emission standard.

(3) See §§ 63.7(g), 63.9(h), and 63.1210(d) for additional requirements pertaining to the Notification of Compliance (e.g., you must include results of performance tests in the Notification of Compliance).

(4) *Time extension.* You may submit a written request to the Administrator for a time extension documenting that, for reasons beyond your control, you may not be able to meet the 90-day deadline for submitting the Notification of Compliance after completion of testing. The Administrator will determine whether a time extension is warranted.

(k) *Failure to submit a timely notification of compliance.* (1) If you fail to postmark a Notification of Compliance by the specified date, you must cease hazardous waste burning immediately.

(2) Prior to submitting a revised Notification of Compliance as provided by paragraph (k)(3) of this section, you may burn hazardous waste only for the purpose of pretesting or comprehensive performance testing and only for a maximum of 720 hours (renewable at the discretion of the Administrator).

(3) You must submit to the Administrator a Notification of Compliance subsequent to a new comprehensive performance test before resuming hazardous waste burning.

(l) *Failure of performance test.*—(1) *Comprehensive performance test.* (i) If you determine (based on CEM recordings, results of analyses of stack samples, or results of CMS performance evaluations) that you have exceeded any emission standard during a comprehensive performance test for a mode of operation, you must cease hazardous waste burning immediately under that mode of operation. You must make this determination within 90 days following completion of the performance test.

(ii) If you have failed to demonstrate compliance with the emission standards for any mode of operation:

(A) Prior to submitting a revised Notification of Compliance as provided by paragraph (l)(1)(ii)(C) of this section, you may burn hazardous waste only for the purpose of pretesting or comprehensive performance testing under revised operating conditions, and only for a maximum of 720 hours (renewable at the discretion of the Administrator), except as provided by paragraph (l)(3) of this section;

(B) You must conduct a comprehensive performance test under revised operating conditions following

the requirements for performance testing of this section; and

(C) You must submit to the Administrator a Notification of Compliance subsequent to the new comprehensive performance test.

(2) *Confirmatory performance test.* If you determine (based on CEM recordings, results of analyses of stack samples, or results of CMS performance evaluations) that you have failed the dioxin/furan emission standard during a confirmatory performance test, you must cease burning hazardous waste immediately. You must make this determination within 90 days following completion of the performance test. To burn hazardous waste in the future:

(i) You must submit to the Administrator for review and approval a test plan to conduct a comprehensive performance test to identify revised limits on the applicable dioxin/furan operating parameters specified in § 63.1209(k);

(ii) You must submit to the Administrator a Notification of Compliance with the dioxin/furan emission standard under the provisions of paragraphs (j) and (k) of this section and this paragraph (l). You must include in the Notification of Compliance the revised limits on the applicable dioxin/furan operating parameters specified in § 63.1209(k); and

(iii) Until the Notification of Compliance is submitted, you must not burn hazardous waste except for purposes of pretesting or confirmatory performance testing, and for a maximum of 720 hours (renewable at the discretion of the Administrator), except as provided by paragraph (l)(3) of this section.

(3) You may petition the Administrator to obtain written approval to burn hazardous waste in the interim prior to submitting a Notification of Compliance for purposes other than testing or pretesting. You must specify operating requirements, including limits on operating parameters, that you determine will ensure compliance with the emission standards of this subpart based on available information including data from the failed performance test. The Administrator will review, modify as necessary, and approve if warranted the interim operating requirements. An approval of interim operating requirements will include a schedule for submitting a Notification of Compliance.

(m) *Waiver of performance test.* (1) The waiver provision of this paragraph applies in addition to the provisions of § 63.7(h).

(2) You are not required to conduct performance tests to document compliance with the mercury, semivolatile metal, low volatile metal or hydrochloric acid/chlorine gas emission standards under the conditions specified below. You are deemed to be in compliance with an emission standard if the twelve-hour rolling average maximum theoretical emission concentration (MTEC) determined as specified below does not exceed the emission standard:

(i) Determine the feedrate of mercury, semivolatile metals, low volatile metals, or total chlorine and chloride from all feedstreams;

(ii) Determine the stack gas flowrate; and

(iii) Calculate a MTEC for each standard assuming all mercury, semivolatile metals, low volatile metals, or total chlorine (organic and inorganic) from all feedstreams is emitted;

(3) To document compliance with this provision, you must:

(i) Monitor and record the feedrate of mercury, semivolatile metals, low volatile metals, and total chlorine and chloride from all feedstreams according to § 63.1209(c);

(ii) Monitor with a CMS and record in the operating record the gas flowrate (either directly or by monitoring a surrogate parameter that you have correlated to gas flowrate);

(iii) Continuously calculate and record in the operating record the MTEC under the procedures of paragraph (m)(2) of this section; and

(iv) Interlock the MTEC calculated in paragraph (m)(2)(iii) of this section to the AWFCO system to stop hazardous waste burning when the MTEC exceeds the emission standard.

(4) In lieu of the requirement in paragraphs (m)(3)(iii) and (iv) of this section, you may:

(i) Identify in the notification of compliance a minimum gas flowrate limit and a maximum feedrate limit of mercury, semivolatile metals, low volatile metals, and/or total chlorine and chloride from all feedstreams that ensures the MTEC as calculated in paragraph (m)(2)(iii) of this section is below the applicable emission standard; and

(ii) Interlock the minimum gas flowrate limit and maximum feedrate limit in paragraph (m)(3)(iv) of this section to the AWFCO system to stop hazardous waste burning when the gas flowrate or mercury, semivolatile metals, low volatile metals, and/or total chlorine and chloride feedrate exceeds the limit in paragraph (m)(4)(i) of this section.

(5) When you determine the feedrate of mercury, semivolatile metals, low volatile metals, or total chlorine and chloride for purposes of this provision, except as provided by paragraph (m)(6) of this section, you must assume that the analyte is present at the full detection limit when the feedstream analysis determines that the analyte is not detected in the feedstream.

(6) Owners and operators of hazardous waste burning cement kilns and lightweight aggregate kilns may assume that mercury is present in raw material at half the detection limit when the raw material feedstream analysis determines that mercury is not detected.

(7) You must state in the site-specific test plan that you submit for review and approval under paragraph (e) of this section that you intend to comply with the provisions of this paragraph. You must include in the test plan documentation that any surrogate that is proposed for gas flowrate adequately correlates with the gas flowrate.

(n) *Feedrate limits for nondetectable constituents.* (1) You must establish separate semivolatile metal, low volatile metal, mercury, and total chlorine (organic and inorganic), and/or ash feedrate limits for each feedstream for which the comprehensive performance test feedstream analysis determines that these constituents are not present at detectable levels.

(2) You must define the feedrate limits established under paragraph (n)(1) of this section as nondetect at the full detection limit achieved during the performance test.

(3) You will not be deemed to be in violation of the feedrate limit established in paragraph (n)(2) of this section when detectable levels of the constituent are measured, whether at levels above or below the full detection limit achieved during the performance test, provided that:

(i) Your total feedrate for that constituent, including the detectable levels in the feedstream which is limited to nondetect levels, is below your feedrate limit for that constituent; or

(ii) Except for ash, your maximum theoretical emission concentration (MTEC) for the constituent (*i.e.*, semivolatile metal, low volatile metal, mercury, and/or hydrochloric acid/chlorine gas) calculated according to paragraph (m) of this section, and considering the contribution from all feedstreams including the detectable levels in the feedstream which is limited to nondetect levels, is below the emission standard in §§ 63,1203, 63.1204, and 63.1205.

quirements under § 63.8(c)(3). The quirements of § 63.1211(d) shall be mplied with instead of § 63.8(c)(3); d

(B) Compliance is based on six-inute block average.

(iii) You must install, calibrate, aintain, and operate a particulate atter CEMS to demonstrate and onitor compliance with the particulate atter standards under this subpart. owever, compliance with the equirements in their section to install, alibrate, maintain and operate the PM EMS is not required until such time hat the Agency promulgates all erformance specifications and perational requirements applicable to M CEMS.

(iv) If you operate a cement kiln ubject to the provisions of this subpart nd use a fabric filter with multiple tacks or an electrostatic precipitator vith multiple stacks, you may, in lieu of installing the COMS required by paragraph (a)(1)(ii) of this section, comply with the opacity standard in accordance with the procedures of Method 9 to part 60 of this chapter:

(A) You must conduct the Method 9 test while the affected source is operating at the highest load or capacity level reasonably expected to occur within the day;

(B) The duration of the Method 9 test shall be at least 30 minutes each day;

(C) You must use the Method 9 procedures to monitor and record the average opacity for each six-minute block period during the test; and

(D) To remain in compliance, all six-minute block averages must not exceed the opacity standard under §§ 63.1204(a)(7) and (b)(7).

(v) If you operate a cement kiln subject to the provisions of this subpart and use a particulate matter control device that exhausts through a monovent, or if the use of a COMS in accordance with the installation specification of Performance Specification 1 (PS–1) of appendix B to part 60 of this chapter is not feasible, you may, in lieu of installing the COMS required by paragraph (a)(1)(ii) of this section, comply with the opacity standard in accordance with the procedures of Method 9 to part 60 of this chapter:

(A) You must conduct the Method 9 test while the affected source is operating at the highest load or capacity level reasonably expected to occur within the day;

(B) The duration of the Method 9 test shall be at least 30 minutes each day;

(C) You must use the Method 9 procedures to monitor and record the

(iv) If you do not intend to comply, but will not stop burning hazardous waste by October 1, 2001, a certification that:

* * * * *

(c) * * *

(2) You must submit a summary of the meeting, along with the list of attendees and their addresses, developed under paragraph (c)(1) of this section, and copies of any written comments or materials submitted at the meeting, to the Administrator as part of the final NIC, in accordance with paragraph (b)(1)(iii) of this section.

* * * * *

13. Section 63.1211 is amended by revising the table in paragraph (c) to read as follows:

§ 63.1211 What are the recordkeeping and reporting requirements?

* * * * *

(c) * * *

Reference	Document, data, or information
63.1201(a), 63.10(b) and (c)	General. Information required to document and maintain compliance with the regulations of this Subpart EEE, including data recorded by continuous monitoring systems (CMS), and copies of all notifications, reports, plans, and other documents submitted to the Administrator.
63.1211(d)	Documentation of compliance.
63.1206(c)(3)(vii)	Documentation and results of the automatic waste feed cutoff operability testing.
63.1209(c)(2)	Feedstream analysis plan.
63.1204(d)(3)	Documentation of compliance with the emission averaging requirements for cement kilns with in-line raw mills.
63.1204(e)(3)	Documentation of compliance with the emission averaging requirements for preheater or preheater/precalciner kilns with dual stacks.
63.1206(b)(1)(ii)(B)	If you elect to comply with all applicable requirements and standards promulgated under authority of the Clean Air Act, including Sections 112 and 129, in lieu of the requirements of this Subpart EEE when not burning hazardous waste, you must document in the operating record that you are in compliance with those requirements.
63.1206(c)(2)	Startup, shutdown, and malfunction plan.
63.1206(c)(3)(v)	Corrective measures for any automatic waste feed cutoff that results in an exceedance of an emission standard or operating parameter limit.
63.1206(c)(4)(ii)	Emergency safety vent operating plan.
63.1206(c)(4)(iii)	Corrective measures for any emergency safety vent opening.
63.1206(c)(5)(ii)	Method used for control of combustion system leaks.
63.1206(c)(6)	Operator training and certification program.
63.1206(c)(7)(i)(D)	Operation and maintenance plan.
63.1209(k)(6)(iii), 63.1209(k)(7)(ii), 63.1209(k)(9)(ii), 63.1209(o)(4)(iii).	Documentation that a substitute activated carbon, dioxin/furan formation reaction inhibitor, or dry scrubber sorbent will provide the same level of control as the original material.

* * * * *

14. Section 63.1212 is amended by revising paragraphs (a)(2), (b)(1), and (b)(2) introductory text to read as follows:

§ 63.1212 What are the other requirements pertaining to the NIC and associated progress reports?

(a) * * *

(2) An authorized representative is the same as a "responsible official" as defined under § 63.2.

(b) * * *

(1) If you begin to burn hazardous waste after September 30, 1999 but prior to June 30, 2000 you must comply with the requirements of §§ 63.1206(a)(3), 63.1210(b) and (c), 63.1211(b), and paragraph (a) of this section, and associated time frames for public meetings and document submittals.

(2) If you intend to begin burning hazardous waste after June 30, 2000 you must comply with the requirements of §§ 63.1206(a)(3), 63.1210(b) and (c), 63.1211(b), and paragraph (a) of this section prior to burning hazardous waste. In addition:

* * * * *

15. The appendix to subpart EEE of part 63 is amended by revising sections 1.1, and 2.8, redesignating sections c and d as 3 and 4, respectively, by revising the header for section 5, and by revising section 6.5.1 to read as follows:

Appendix to Subpart EEE of Part 63—Quality Assurance Procedures for Continuous Emissions Monitors Used for Hazardous Waste Combustors

* * * * *

1.1 Applicability. These quality assurance requirements are used to evaluate the effectiveness of quality control (QC) and quality assurance (QA) procedures and the quality of data produced by continuous emission monitoring systems (CEMS) that are used for determining compliance with the emission standards on a continuous basis as specified in the applicable regulation. The QA procedures specified by these requirements represent the minimum requirements necessary for the control and assessment of the quality of CEMS data used to demonstrate compliance with the emission standards provided under this subpart EEE of part 63. Owners and operators must meet these minimum requirements and are encouraged to develop and implement a more extensive QA program. These requirements supersede those found in part 60, Appendix F, of this chapter. Appendix F does not apply to hazardous waste-burning devices.

* * * * *

2.8 Rolling Average. The average emissions, based on some (specified) time period, calculated every minute from a one-minute average of four measurements taken at 15-second intervals.

* * * * *

5. Performance Evaluation for CO, O_2, and HC CEMS

* * * * *

6.5.1 *One-Minute Average for CO and HHC CEMS.* One-minute averages are the arithmetic average of the four most recent 15-second observations and must be calculated using the following equation:

$$\bar{c} = \sum_{i=1}^{4} \frac{c_i}{4}$$

Where:

$\bar{c}$ = the one minute average

c_i = a fifteen-second observation from the CEM

Fifteen second observations must not be rounded or smoothed. Fifteen-second observations may be disregarded only as a result of a failure in the CEMS and allowed in the source's quality

type of inhibitor used during the comprehensive performance test, as required by § 63.1209(k)(9)(ii).

(xxiii) If your source is equipped with a wet scrubber and you elect to monitor solids content of the scrubber liquid manually but believe that hourly monitoring of solids content is not warranted, you must support an alternative monitoring frequency in the comprehensive performance test plan, as required by § 63.1209(m)(1)(i)(B)(*1*)(*i*).

(xxiv) If your source is equipped with a particulate matter control device other than a wet scrubber, baghouse, or electrostatic precipitator, you must include in the comprehensive performance test plan:

(A) Documentation to support the operating parameter limits you establish for the control device, as required by § 63.1209(m)(1)(iv)(A)(*4*); and

(B) Support for the use of manufacturer specifications if you recommend such specifications in lieu of basing operating limits on performance test operating levels, as required by § 63.1209(m)(1)(iv)(D).

(xxv) If your source is equipped with a dry scrubber to control hydrochloric acid and chlorine gas, you must document in the comprehensive performance test plan key parameters that affect adsorption, and the limits you establish for those parameters based on the sorbent used during the performance test, if you elect not to specify and use the brand and type of sorbent used during the comprehensive performance test, as required by § 63.1209(o)(4)(iii)(A); and

* * * * *

(h) * * *

(2) Current operating parameter limits are also waived during pretesting prescribed in the approved test plan prior to comprehensive performance testing for an aggregate time not to exceed 720 hours of operation (renewable at the discretion of the Administrator). Pretesting means:

* * * * *

(j) * * *

(1) * * *

(i) Within 90 days of completion of a comprehensive performance test, you must postmark a Notification of Compliance documenting compliance or noncompliance with the emission standards and continuous monitoring system requirements, and identifying operating parameter limits under § 63.1209.

* * * * *

11. Section 63.1209 is amended by revising the word "standards" in the first sentence of paragraph (a)(7) to read "standard" and by revising paragraphs (a)(1)(i), (a)(1)(iii), (a)(6)(iii)(A), (b)(2) introductory text, (l)(1), (l)(3), (l)(4), (m)(3), (n)(2)(i)(A), (B) and (C), (n)(4), and (o)(1) to read as follows:

§ 63.1209 What are the monitoring requirements?

(a) * * *

(1)(i) You must use either a carbon monoxide or hydrocarbon CEMS to demonstrate and monitor compliance with the carbon monoxide and hydrocarbon standard under this subpart. You must also use an oxygen CEMS to continuously correct the carbon monoxide or hydrocarbon level to 7 percent oxygen.

* * * * *

(iii) You must install, calibrate, maintain, and operate a particulate matter CEMS to demonstrate and monitor compliance with the particulate matter standards under this subpart. However, compliance with the requirements in this section to install, calibrate, maintain and operate the PM CEMS is not required until such time that the Agency promulgates all performance specifications and operational requirements applicable to PM CEMS.

* * * * *

(6) * * *

(iii) *Calculation of rolling averages when the hazardous waste feed is cutoff.* (A) Except as provided by paragraph (a)(6)(iii)(B) of this section, you must continue monitoring carbon monoxide and hydrocarbons when the hazardous waste feed is cutoff if the source is operating. You must not resume feeding hazardous waste if the emission levels exceed the standard.

* * * * *

(b) * * *

(2) Except as specified in paragraphs (b)(2)(i) and (ii) of this section, you must install and operate continuous monitoring systems other than CEMS in conformance with § 63.8(c)(3) that requires you, at a minimum, to comply with the manufacturer's written specifications or recommendations for installation, operation, and calibration of the system:

* * * * *

(l) * * *

(1) Feedrate of total mercury. You must establish a 12-hour rolling average limit for the total feedrate of mercury in all feedstreams as the average of the test run averages, unless mercury feedrate limits are extrapolated from performance test feedrate levels under the following provisions.

* * * * *

(3) Activated carbon injection. If your combustor is equipped with an activated carbon injection system, you must establish operating parameter limits prescribed by paragraph (k)(6) of this section.

(4) Activated carbon bed. If your combustor is equipped with a carbon bed system, you must establish operating parameter limits prescribed by paragraph (k)(7) of this section.

* * * * *

(m) * * *

(3) Maximum ash feedrate. Owners and operators of hazardous waste incinerators must establish a maximum ash feedrate limit as the average of the test run averages.

* * * * *

(n) * * *

(2) * * *

(i) * * *

(A) You must establish a 12-hour rolling average limit for the feedrate of cadmium and lead, combined, in all feedstreams as the average of the test run averages;

(B) You must establish a 12-hour rolling average limit for the feedrate of arsenic, beryllium, and chromium, combined, in all feedstreams as the average of the test run averages; and

(C) You must establish a 12-hour rolling average limit for the feedrate of arsenic, beryllium, and chromium, combined, in all pumpable feedstreams as the average of the test run averages. Dual feedrate limits for both pumpable and total feedstreams are not required, however, if you base the total feedrate limit solely on the feedrate of pumpable feedstreams.

* * * * *

(4) Maximum total chlorine and chloride feedrate. You must establish a 12-hour rolling average limit for the feedrate of total chlorine and chloride in all feedstreams as the average of the test run averages.

* * * * *

(o) * * *

(1) Feedrate of total chlorine and chloride. You must establish a 12-hour rolling average limit for the total feedrate of chlorine (organic and inorganic) in all feedstreams as the average of the test run averages.

* * * * *

12. Section 63.1210 is amended by revising paragraphs (b)(1)(iv) introductory text and (c)(2) to read as follows:

§ 63.1210 What are the notification requirements?

* * * * *

(b) * * *

(1) * * *

(6) *Operator training and certification.* (i) You must establish training programs for all categories of personnel whose activities may reasonably be expected to directly affect emissions of hazardous air pollutants from the source. Such persons include, but are not limited to, chief facility operators, control room operators, continuous monitoring system operators, persons that sample and analyze feedstreams, persons that manage and charge feedstreams to the combustor, persons that operate emission control devices, and ash and waste handlers. Each training program shall be of a technical level commensurate with the person's job duties specified in the training manual. Each commensurate training program shall require an examination to be administered by the instructor at the end of the training course. Passing of this test shall be deemed the "certification" for personnel, except that for control room operators and shift supervisors, the training and certification program shall be as specified in paragraphs (c)(6)(iii) and (iv) of this section.

* * * * *

10. Section 63.1207 is amended by revising paragraphs (f)(1)(ii)(A), (f)(1)(ii)(B), (f)(1)(ix), (f)(1)(x), (f)(1)(xi), (f)(1)(xii), (h)(2) introductory text, and (j)(1)(i); redesignating paragraph (f)(1)(xiii) as (f)(1)(xxvi); and adding paragraphs (f)(1)(xiii) through (f)(1)(xxv), to read as follows:

§ 63.1207 What are the performance testing requirements?

* * * * *

(f) * * *

(1) * * *

(ii) * * *

(A) An identification of such organic hazardous air pollutants that are present in the feedstream, except that you need not analyze for organic hazardous air pollutants that would reasonably not be expected to be found in the feedstream. You must identify any constituents you exclude from analysis and explain the basis for excluding them. You must conduct the feedstream analysis according to § 63.1208(b)(8).;

(B) An approximate quantification of such identified organic hazardous air pollutants in the feedstreams, within the precision produced by the analytical procedures of § 63.1208(b)(8); and

* * * * *

(ix) A determination of the hazardous waste residence time as required by § 63.1206(b)(11);

(x) If you are requesting to extrapolate metal feedrate limits from comprehensive performance test levels under §§ 63.1209(l)(1)(i) or 63.1209(n)(2)(ii))(A):

(A) A description of the extrapolation methodology and rationale for how the approach ensures compliance with the emission standards;

(B) Documentation of the historical range of normal (*i.e.*, other than during compliance testing) metals feedrates for each feedstream;

(C) Documentation that the level of spiking recommended during the performance test will mask sampling and analysis imprecision and inaccuracy to the extent that extrapolation of feedrates and emission rates from performance test data will be as accurate and precise as if full spiking were used;

(xi) If you do not continuously monitor regulated constituents in natural gas, process air feedstreams, and feedstreams from vapor recovery systems under § 63.1209(c)(5), you must include documentation of the expected levels of regulated constituents in those feedstreams;

(xii) Documentation justifying the duration of system conditioning required to ensure the combustor has achieved steady-state operations under performance test operating conditions, as provided by paragraph (g)(1)(iii) of this section;

(xiii) For cement kilns with in-line raw mills, if you elect to use the emissions averaging provision of § 63.1204(d), you must notify the Administrator of your intent in the initial (and subsequent) comprehensive performance test plan, and provide the information required under § 63.1204(d)(ii)(B).

(xiv) For preheater or preheater/precalciner cement kilns with dual stacks, if you elect to use the emissions averaging provision of § 63.1204(e), you must notify the Administrator of your intent in the initial (and subsequent) comprehensive performance test plan, and provide the information required under § 63.1204(e)(2)(iii)(A).

(xv) For incinerators and lightweight aggregate kilns equipped with a baghouse, you must submit the baghouse operation and maintenance plan required under § 63.1206(c)(7)(ii) with the initial comprehensive performance test plan.

(xvi) If you are not required to conduct performance testing to document compliance with the mercury, semivolatile metal, low volatile metal, or hydrochloric acid/chlorine gas emission standards under paragraph (m) of this section, you must include with the comprehensive performance test plan documentation of compliance with the provisions of that section.

(xvii) If you propose to use a surrogate for measuring or monitoring gas flowrate, you must document in the comprehensive performance test plan that the surrogate adequately correlates with gas flowrate, as required by paragraph (m)(7) of this section, and § 63.1209(j)(2), (k)(3), (m)(2)(i), (m)(5)(i), and (o)(2)(i).

(xviii) You must submit an application to request alternative monitoring under § 63.1209(g)(1) not later than with the comprehensive performance test plan, as required by § 63.1209(g)(1)(iii)(A).

(xix) You must document the temperature location measurement in the comprehensive performance test plan, as required by §§ 63.1209(j)(1)(i) and 63.1209(k)(2)(i).

(xx) If your source is equipped with activated carbon injection, you must document in the comprehensive performance test plan:

(A) The manufacturer specifications for minimum carrier fluid flowrate or pressure drop, as required by § 63.1209(k)(6)(ii); and

(B) Key parameters that affect carbon adsorption, and the operating limits you establish for those parameters based on the carbon used during the performance test, if you elect not to specify and use the brand and type of carbon used during the comprehensive performance test, as required by § 63.1209(k)(6)(iii).

(xxi) If your source is equipped with a carbon bed system, you must include in the comprehensive performance test plan:

(A) A recommended schedule for conducting a subsequent performance test to document compliance with the dioxin/furan and mercury emission standards if you use manufacturer specifications rather than actual bed age at the time of the test to establish the initial limit on bed age, as required by § 63.1209(k)(7)(i)(C); and

(B) Key parameters that affect carbon adsorption, and the operating limits you establish for those parameters based on the carbon used during the performance test, if you elect not to specify and use the brand and type of carbon used during the comprehensive performance test, as required by § 63.1209(k)(7)(ii).

(xxii) If you feed a dioxin/furan inhibitor into the combustion system, you must document in the comprehensive performance test plan key parameters that affect the effectiveness of the inhibitor, and the operating limits you establish for those parameters based on the inhibitor fed during the performance test, if you elect not to specify and use the brand and

document that, during the destruction and removal efficiency (DRE) test runs or their equivalent as provided by § 63.1206(b)(7), hydrocarbons do not exceed 10 parts per million by volume during those runs, over an hourly rolling average (monitored continuously with a continuous emissions monitoring system), dry basis, corrected to 7 percent oxygen, and reported as propane; or

* * * * *

7. Section 63.1204 is amended by revising paragraphs (a)(5)(i)(A), (a)(5)(ii)(B), and (b)(5)(i)(A)(*1*) and by removing and reserving paragraph (g) to read as follows:

§ 63.1204 What are the standards for hazardous waste burning cement kilns?

(a) * * *

(5) * * *

(i) * * *

(A) Carbon monoxide in the by-pass duct or mid-kiln gas sampling system in excess of 100 parts per million by volume, over an hourly rolling average (monitored continuously with a continuous emissions monitoring system), dry basis and corrected to 7 percent oxygen. If you elect to comply with this carbon monoxide standard rather than the hydrocarbon standard under paragraph (a)(5)(i)(B) of this section, you must also document that, during the destruction and removal efficiency (DRE) test runs or their equivalent as provided by § 63.1206(b)(7), hydrocarbons in the by-pass duct or mid-kiln gas sampling system do not exceed 10 parts per million by volume during those runs, over an hourly rolling average (monitored continuously with a continuous emissions monitoring system), dry basis, corrected to 7 percent oxygen, and reported as propane; or

* * * * *

(ii) * * *

(B) Carbon monoxide in the main stack in excess of 100 parts per million by volume, over an hourly rolling average (monitored continuously with a continuous emissions monitoring system), dry basis and corrected to 7 percent oxygen. If you elect to comply with this carbon monoxide standard rather than the hydrocarbon standard under paragraph (a)(5)(ii)(A) of this section, you also must document that, during the destruction and removal efficiency (DRE) test runs or their equivalent as provided by § 63.1206(b)(7), hydrocarbons in the main stack do not exceed 20 parts per million by volume during those runs, over an hourly rolling average (monitored continuously with a continuous emissions monitoring system), dry basis, corrected to 7 percent oxygen, and reported as propane.

* * * * *

(b) * * *

(5) * * *

(i) * * *

(A) * * *

(*1*) Carbon monoxide in excess of 100 parts per million by volume, over an hourly rolling average (monitored continuously with a continuous emissions monitoring system), dry basis and corrected to 7 percent oxygen. If you elect to comply with this carbon monoxide standard rather than the hydrocarbon standard under paragraph (b)(5)(i)(A)(2) of this section, you also must document that, during the destruction and removal efficiency (DRE) test runs or their equivalent as provided by § 63.1206(b)(7), hydrocarbons do not exceed 10 parts per million by volume during those runs, over an hourly rolling average (monitored continuously with a continuous emissions monitoring system), dry basis, corrected to 7 percent oxygen, and reported as propane; or

* * * * *

8. Section 63.1205 is amended by revising paragraph (a)(5)(i); by redesignating paragraph (b)(5) introductory text as paragraph (b)(5)(i) and revising it; and by removing paragraph (e), to read as follows:

§ 63.1205 What are the standards for hazardous waste burning lightweight aggregate kilns?

(a) * * *

(5) * * *

(i) Carbon monoxide in excess of 100 parts per million by volume, over an hourly rolling average (monitored continuously with a continuous emissions monitoring system), dry basis and corrected to 7 percent oxygen. If you elect to comply with this carbon monoxide standard rather than the hydrocarbon standard under paragraph (a)(5)(ii) of this section, you also must document that, during the destruction and removal efficiency (DRE) test runs or their equivalent as provided by § 63.1206(b)(7), hydrocarbons do not exceed 20 parts per million by volume during those runs, over an hourly rolling average (monitored continuously with a continuous emissions monitoring system), dry basis, corrected to 7 percent oxygen, and reported as propane; or

* * * * *

(b) * * *

(5) *Carbon monoxide and hydrocarbons.* (i) Carbon monoxide in excess of 100 parts per million by volume, over an hourly rolling average (monitored continuously with a continuous emissions monitoring system), dry basis and corrected to 7 percent oxygen. If you elect to comply with this carbon monoxide standard rather than the hydrocarbon standard under paragraph (b)(5)(ii) of this section, you also must document that, during the destruction and removal efficiency (DRE) test runs or their equivalent as provided by § 63.1206(b)(7), hydrocarbons do not exceed 20 parts per million by volume during those runs, over an hourly rolling average (monitored continuously with a continuous emissions monitoring system), dry basis, corrected to 7 percent oxygen, and reported as propane; or

* * * * *

9. Section 63.1206 is amended by revising paragraph (b)(5)(i) introductory text, (b)(5)(i)(C)(1), (b)(5)(iii), and (c)(6)(i) to read as follows:

§ 63.1206 When and how must you comply with the standards and operating requirements?

* * * * *

(b) * * *

(5) *Changes in design, operation, or maintenance.* (i) *Changes that may adversely affect compliance.* If you plan to change (as defined in paragraph (b)(5)(iii) of this section) the design, operation, or maintenance practices of the source in a manner that may adversely affect compliance with any emission standard that is not monitored with a CEMS:

* * * * *

(C) * * *

(*1*) Except as provided by paragraph (b)(5)(i)(C)(2) of this section, after the change and prior to submitting the notification of compliance, you must not burn hazardous waste for more than a total of 720 hours (renewable at the discretion of the Administrator) and only for the purposes of pretesting or comprehensive performance testing. Pretesting is defined at § 63.1207(h)(2)(i) and (ii).

* * * * *

(iii) *Definition of "change."* For purposes of paragraph (b)(5) of this section, "change" means any change in design, operation, or maintenance practices that were documented in the comprehensive performance test plan, Notification of Compliance, or startup, shutdown, and malfunction plan.

* * * * *

(c) * * *

2. Appendix A in part 60 is amended by revising paragraph 12.2(b) in test method 5i to read as follows:

Appendix A—Test Methods

* * * * *

Method 5I—Determination of Low Level Particulate Matter Emissions From Stationary Sources

* * * * *

12.2 * * *

b. A minimum precision criteria for Reference Method PM data is that RSD for any data pair must be less than 10% as long as the mean PM concentration is greater than 10 mg/dscm. If the mean PM concentration is less than 10 mg/dscm higher RSD values are acceptable. At mean PM concentration of 1 mg/dscm acceptable RSD for paired trains is 25%. Between 1 and 10 mg/dscm acceptable RSD criteria should be linearly scaled from 25% to 10%. Pairs of manual method data exceeding these RSD criteria should be eliminated from the data set used to develop a PM CEMS correlation or to assess RCA. If the mean PM concentration is less than 1 mg/dscm, RSD does not apply and the mean result is acceptable.

* * * * *

PART 63—NATIONAL EMISSION STANDARDS FOR HAZARDOUS AIR POLLUTANTS FOR SOURCE CATEGORIES

3. The authority citation for part 63 continues to read as follows:

Authority: 42 U.S.C. 7401 *et seq.*

Subpart EEE—National Emission Standards for Hazardous Air Pollutants from Hazardous Waste Combustors

4. Section 63.1200 is amended by revising Table 1 in paragraph (b) to read as follows:

§ 63.1200 Who is subject to these regulations?

* * * * *

(b) * * *

TABLE 1 TO § 63.1200.—HAZARDOUS WASTE COMBUSTORS EXEMPT FROM SUBPART EEE

If	And if	Then
(1) You are a previously affected source.	(i) You ceased feeding hazardous waste for a period of time greater than the hazardous waste residence time (i.e., hazardous waste no longer resides in the combustion chamber);. (ii) You have initiated the closure requirements of subpart G, parts 264 or 265 of this chapter;. (iii) You begin complying with the requirements of all other applicable standards of this part (Part 63); and. (iv) You notify the Administrator in writing that you are no longer an affected source under this subpart (Subpart EEE).	You are no longer subject to this subpart (Subpart EEE).
(2) You are a research, development, and demonstration source.	You operate for no longer than one year after first burning hazardous waste (Note that the Administrator can extent this one-year restriction on a case-by-case basis upon your written request documenting when you first burned hazardous waste and the justification for needing additional time to perform research, development, or demonstration operations.).	You are not subject to this subpart (Subpart EEE). This exemption applies even if there is a hazardous waste combustor at the plant site that is regulated under this subpart. You still, however, remain subject to § 270.65 of this chapter.
(3) The only hazardous wastes you burn are exempt from regulation under § 266.100(c) of this chapter.	.....	You are not subject to the requirements of this subpart (Subpart EEE).

* * * * *

5. Section 63.1201 is amended by revising the definition of *Automatic waste feed cutoff (AWFCO) system* in paragraph (a) to read as follows:

§ 63.1201 Definitions and acronyms used in this subpart.

(a) * * *

Automatic waste feed cutoff (AWFCO) system means a system comprised of cutoff valves, actuator, sensor, data manager, and other necessary components and electrical circuitry designed, operated and maintained to stop the flow of hazardous waste to the combustion unit automatically and immediately (except as provided by § 63.1206(c)(3)(viii)) when any operating requirement is exceeded.

* * * * *

6. Section 63.1203 is amended by revising paragraphs (a)(3), (a)(4), (a)(5)(i), and (b)(5)(i) and removing paragraph (e) to read as follows:

§ 63.1203 What are the standards for hazardous waste incinerators?

(a) * * *

(3) Lead and cadmium in excess of 240 μg/dscm, combined emissions, corrected to 7 percent oxygen;

(4) Arsenic, beryllium, and chromium in excess of 97 μg/dscm, combined emissions, corrected to 7 percent oxygen;

(5) * * *

(i) Carbon monoxide in excess of 100 parts per million by volume, over an hourly rolling average (monitored continuously with a continuous emissions monitoring system), dry basis and corrected to 7 percent oxygen. If you elect to comply with this carbon monoxide standard rather than the hydrocarbon standard under paragraph (a)(5)(ii) of this section, you must also document that, during the destruction and removal efficiency (DRE) test runs or their equivalent as provided by § 63.1206(b)(7), hydrocarbons do not exceed 10 parts per million by volume during those runs, over an hourly rolling average (monitored continuously with a continuous emissions monitoring system), dry basis, corrected to 7 percent oxygen, and reported as propane; or

* * * * *

(b) * * *

(5) * * *

(i) Carbon monoxide in excess of 100 parts per million by volume, over an hourly rolling average (monitored continuously with a continuous emissions monitoring system), dry basis and corrected to 7 percent oxygen. If you elect to comply with this carbon monoxide standard rather than the hydrocarbon standard under paragraph (b)(5)(ii) of this section, you must also

The precision criteria currently state that if the average of paired train data is greater than 10 mg/dscm, the resulting RSD must not be greater than 10%. At a paired train data average of 1 mg/dscm, the RSD must not be greater than 25%. Between 1 and 10 mg/dscm, the RSD is linearly scaled from 25 to 10% based on the actual mean value recorded. The method is silent about what the RSD is if the mean emissions are less than 1 mg/dscm.

We intended there to be no RSD criteria if the average emissions from the paired data trains is less than 1 mg/dscm. In other words, no precision criteria exist and all average results less than 1 mg/dscm are acceptable.

IV. Administrative Requirements

Under Executive Order 12866 (58 FR 51735, October 4, 1993), this action is not a "significant regulatory action" and is therefore not subject to review by the Office of Management and Budget. Because the agency has made a "good cause" finding, see Section I above, that this action is not subject to notice-and-comment requirements under the Administrative Procedure Act or any other statute, it is not subject to the regulatory flexibility provisions of the Regulatory Flexibility Act (5 U.S.C. 601 *et seq.*), or to sections 202 and 205 of the Unfunded Mandates Reform Act of 1995 (UMRA) (Public Law 104–4). In addition, this action does not significantly or uniquely affect small governments or impose a significant intergovernmental mandate, as described in sections 203 and 204 of UMRA. This rule also does not significantly or uniquely affect the communities of tribal governments, as specified by Executive Order 13084 (63 FR 27655, May 10, 1998). This rule will not have substantial direct effects on the States, on the relationship between the national government and the States, or on the distribution of power and responsibilities among the various levels of government, as specified in Executive Order 13132 (64 FR 43255, August 10, 1999). This rule also is not subject to Executive Order 13045 (62 FR 19885, April 23, 1997), because it is not economically significant.

This technical correction action does not involve technical standards; thus, the requirements of section 12(d) of the National Technology Transfer and Advancement Act of 1995 (15 U.S.C. 272 note) do not apply. The rule also does not involve special consideration of environmental justice related issues as required by Executive Order 12898 (59 FR 7629, February 16, 1994). In issuing this rule, we have taken the necessary steps to eliminate drafting errors and ambiguity, minimize potential litigation, and provide a clear legal standard for affected conduct, as required by section 3 of Executive Order 12988 (61 FR 4729, February 7, 1996). EPA has complied with Executive Order 12630 (53 FR 8859, March 15, 1988) by examining the takings implications of the rule in accordance with the "Attorney General's Supplemental Guidelines for the Evaluation of Risk and Avoidance of Unanticipated Takings' issued under the executive order. This rule does not impose an information collection burden under the provisions of the Paperwork Reduction Act of 1995 (44 U.S.C. 3501 *et seq.*). Our compliance with these statutes and Executive Orders for the underlying rule is discussed in the September 30, 1999 **Federal Register** document.

The Congressional Review Act, 5 U.S.C. 801 *et seq.*, as added by the Small Business Regulatory Enforcement Fairness Act of 1996, generally provides that before a rule may take effect, the agency promulgating the rule must submit a rule report, which includes a copy of the rule, to each House of the Congress and to the Comptroller General of the United States. Section 808 allows the issuing agency to make a good cause finding that notice and public procedure is impracticable, unnecessary or contrary to the public interest. This determination must be supported by a brief statement. 5 U.S.C. 808(2). As stated previously, EPA has made such a good cause finding, including the reasons therefor, and established an effective date of July 10, 2000. EPA will submit a report containing this rule and other required information to the U.S. Senate, the U.S. House of Representatives, and the Comptroller General of the United States prior to publication of the rule in the **Federal Register**. This action is not a "major rule" as defined by 5 U.S.C. 804(2).

V. Immediate Effective Date

EPA is making this rule effective immediately. The rule adopts amendments which are purely technical in that they correct mistakes which are clearly inconsistent with the Agency's stated intent. This rule also clarifies ambiguities or errors in preamble statements to help stakeholders better understand the regulations themselves. Comment on such changes is unnecessary within the meaning of 5 U.S.C. 553(b)(3)(B). For the same reasons, there is good cause to make the rule effective immediately pursuant to 5 U.S.C. 553 (d)(3).

List of Subjects

40 CFR Part 60

Environmental protection, Administrative practice and procedure, Air pollution control, Aluminum, Ammonium sulfate plants, Batteries, Beverages, Carbon monoxide, Cement industry, Coal, Copper, Dry cleaners, Electric power plants, Fertilizers, Fluoride, Gasoline, Glass and glass products, Grains, Graphic arts industry, Heaters, Household appliances, Insulation, Intergovernmental relations, Iron, Labeling, Lead, Lime, Metallic and nonmetallic mineral processing plants, Metals, Motor vehicles, Natural gas, Nitric acid plants, Nitrogen dioxide, Paper and paper products industry, Particulate matter, Paving and roofing materials, Petroleum, Phosphate, Plastics materials and synthetics, Polymers, Reporting and recordkeeping requirements, Sewage disposal, Steel, Sulfur oxides, Sulfuric acid plants, Tires, Urethane, Vinyl, Volatile organic compounds, Waste treatment and disposal, Zinc.

40 CFR Part 63

Environmental protection, Air pollution control, Hazardous substances, Reporting and recordkeeping requirements.

40 CFR Part 261

Environmental protection, Comparable fuels, Syngas fuels, Excluded hazardous waste, Hazardous waste, Reporting and recordkeeping requirements.

40 CFR Part 270

Environmental protection, Administrative practice and procedure, Confidential business information, Hazardous materials transportation, Hazardous waste, Reporting and recordkeeping requirements, Water pollution control, Water supply.

Dated: June 13, 2000.

Michael Shapiro,

Principal Deputy Assistant Administrator, Office of Solid Waste and Emergency Response.

For the reasons set out in the preamble, title 40 of the Code of Federal Regulations is amended as follows:

PART 60—STANDARDS OF PERFORMANCE FOR NEW STATIONARY SOURCES

1. The authority citation for part 60 continues to read as follows:

Authority: 42 U.S.C. 7401, 7411, 7414, 7416, 7429, and 7601.

shorter than one hour in duration, the ten-minute rolling average is not appropriate for a national regulation. The Agency wishes to clarify that the regulatory language is correct, and that the preamble language found on page 52952 is incorrect and should be disregarded.

3. Preamble Language Regarding Manual Stack Methods for Compliance With the HCl and Cl_2 Standards Is Incorrect

On page 52958, we state that for compliance with the hydrochloric acid and chlorine standards, you must use Method 26A in 40 CFR part 60, appendix A. We also go on to say that we reject other methods for HCl and Cl_2 compliance. These preamble statements are in error and should be disregarded. In the final regulatory language we allow the use of Methods 261, 320, or 321 for compliance.

4. The Response to Comments Associated With Combustion System Leaks Is Incorrect

The September 30, 1999 rule states that a source must control combustion system leaks by: (1) Keeping the combustion zone sealed to prevent combustion system leaks; (2) maintaining the maximum combustion zone pressure lower than ambient pressure using an instantaneous monitor; or, (3) upon written approval of the Administrator, using an alternative means of control to provide control of combustion system leaks equivalent to maintenance of combustion pressure lower than ambient pressure (see § 63.1206(c)(5)). In our response to comments on the proposed rule (see US EPA, "Final Response to Comments to the Proposed HWC MACT Standards: Volume II," July 1999) we incorrectly implied that it would be appropriate for a source to use a one-minute averaging period to comply with the provisions of option 2 above.[1]

The Agency today clarifies that the response to comments language is incorrect. We considered the commenters' suggested approach of allowing the use of one-minute averaging periods to comply with option 2 (*i.e.*, § 63.1206(c)(5)(i)(B)), but later rejected the approach because it did not assure fugitive emissions would be adequately controlled. The response to comments document represents an earlier point of view and inadvertently was not updated to reflect our final position.[2]

5. Clarification of Applicability of Subpart EEE to Facilities Previously Subject to Title V Permitting

Following promulgation of the September 30, 1999 rule, we received a number of questions regarding the applicability of subpart EEE to sources that operate, or are being constructed/reconstructed, at facilities previously subject to, or in possession of, a title V permit. These questions arise in response to the rule language of 40 CFR 63.1200 (a)(2) where we state that, "Both area sources and major sources, not previously subject to title V permitting, are immediately subject to the requirement to apply for and obtain a title V permit in all States, and in areas covered by part 71 of this chapter." In today's correction document we are clarifying that the provisions of subpart EEE apply to each hazardous waste burning incinerator, cement kiln, and lightweight aggregate kiln individually firing hazardous waste on, or following, the effective date of the final rule (September 30, 1999).[3] This includes individual affected sources operating at facilities currently in possession of a title V permit due to other regulated activities at the facility. The language of § 63.1200(a)(2) in no way limits the need for facilities currently in possession of a title V permit to fulfill the requirements of subpart EEE as they apply to each affected source operating at the facility. Section 63.1200(a)(2) is only meant to state that facilities in possession of a title V permit do not have to apply for a new title V permit for the hazardous waste burning activities regulated by subpart EEE. Our presumption in promulgating § 63.1200(a)(2) is that sources currently in possession of a title V permit must follow the applicable requirements of the general provisions found at 40 CFR part 63, subpart A, and the permit revision provisions of 40 CFR part 71, subpart A.

6. Operator Training and Certification Requirement Is Clarified

Many stakeholders have expressed concern that the operator training and certification requirements under § 63.1206(c)(6) could be interpreted to require virtually every employee at the facility to pass a technical training and certification program equivalent to that of the American Society of Mechanical Engineers (ASME) QHO–1 program. These stakeholders note that a formal technical training and certification program is not necessary or appropriate for employees holding positions not related to the emissions control aspects of facilities operations—such as some of the administrative staff, quarry workers and raw material handlers.

We agree and are clarifying today that we neither intended the facility to subject all personnel to the training and certification program requirements nor intended the facility to establish a single training and certification program applicable to all categories of personnel whose activities may reasonably be expected to directly affect emissions of hazardous air pollutants. Instead, we contemplated a source having several programs suitable for each category of personnel, and that for control room operators and shift supervisors, the training and certification program would certainly be of a technical level similar to ASME QHO–1. For personnel whose activities may reasonably be expected to directly affect emissions, the certification may simply consist of documentation that they successfully completed a training program commensurate with the level of responsibility for the particular position. Personnel such as quarry operators, raw material workers, finished product handlers, some types of process monitoring operations, and much of the administrative staff whose activities are not expected to directly affect emissions of hazardous air pollutants from the source are exempted from the operator training and certification requirements of § 63.1206(c)(6).

7. Part 60, Appendix A, Method 5i, Section 12.2b—Relative Standard Deviation (RSD) Criteria for Emissions Less Than 1 mg/dscm Are Clarified

Part 60, appendix A, Method 5i, section 12.2b includes a graduated precision criteria for eliminating imprecise data. Section 12.2a includes a simplified equation for calculating the precision criteria, called the Relative Standard Deviation, or RSD. The proposal to include a precision criteria in Method 5i was widely endorsed.

[1] For instance, one of the sections in this document states "therefore, we have decided to follow commenters suggestions and allow a one-minute averaging period to account for small fluctuations in combustion chamber pressure due to inaccurate readings of the monitor or feeding practices that lead to brief increases in combustion pressure." See Final Response to Comments to the Proposed HWC MACT Standards, Volume II, Section Titled "Combustion Fugitive Emissions Maximum Pressure Limit," pages 5 and 6.

[2] We note that the decision not to allow the use of averaging periods to comply with § 63.1206(c)(5)(i)(B) is reflected in the September 30, 1999 preamble (see 64 FR 52920) and the July 1999 Final Technical Support Document, Volume IV, Chapter 2, Section 2.2.1, and Chapter 8.

[3] The provisions of subpart EEE apply to each source firing hazardous waste on the effective date of the rule unless a source can demonstrate that it is exempt from subpart EEE because the source is in compliance with one of the three provisions identified in table 1 to § 63.1200.

6. Average Limits Are Calculated as the Average of the Test Run Averages: § 63.1209

The preamble to the September 30, 1999 rule states that feedrate limits for mercury, semi-volatile metals, low-volatile metals, and hydrochloric acid/chlorine gas must be determined by establishing the "average of the test run averages" from the comprehensive performance test (see pages 64 FR 52943, 52946, and 52952, respectively). However, in § 63.1209, the requirement is incorrectly expressed as the "average of the average hourly rolling averages for each run" from the comprehensive performance test. Today's rule amends the regulatory language to read "the average of the test run averages," which was the intended phrase. We are also clarifying that the preamble summary tables for semi-volatile metals and low-volatile metals (64 FR 52945) and hydrochloric acid/chlorine gas (64 FR 52951) should state that feedrate limits for 12-hour averaging periods are established by the average of test run averages rather than the average of the average hourly rolling averages for each run.

7. The Table in § 63.1211 Summarizing Recordkeeping Requirements Is Corrected

Today's rule corrects the reference to § 63.1206(c)(7), as well as adding a new reference to for § 63.1206(c)(5), to the table of recordkeeping requirements found in § 63.1211 (see 64 FR 53065). No substantive recordkeeping changes are made by this action; we are merely updating the table's references to other sections where the substantive recordkeeping requirements are lodged.

8. The Definition of Rolling Average in the Appendix to Subpart EEE of Part 63 Is Corrected

In the definitions section of the appendix to subpart EEE, the definition for a "rolling average" includes a sentence on continuous emissions monitoring systems (CEMS) other than carbon monoxide and total hydrocarbons CEMS. This sentence is unnecessary because we did not finalize other CEMS-based emission standards; therefore, we are removing this sentence from the appendix to subpart EEE.

9. The Citation in § 270.42 of the Notification of Compliance Is Corrected

The September 30, 1999 final rule moved the Notification of Intent to Comply (NIC) requirements from § 63.1211 to § 63.1210, but failed to revise the citation of § 63.1211 in § 270.42. We are correcting this citation in today's rule.

10. Information Required To Be Included in the Performance Test Plan Is Consolidated: § 63.1207(f)(1)

The rule lists information that must be included in the comprehensive performance test plan under § 63.1207(f)(1). Several stakeholders note, however, that the list is not complete. Several types of additional information that must be included in the comprehensive performance test plan were inadvertently omitted from the summary list in § 63.1207(f)(1). Accordingly, to avoid a misleading summary list, we are revising the summary list to include all information that various provisions of the rule require to be included in the comprehensive performance test plan.

11. Definition of a Responsible Official Is Revised: § 63.1212(a)(2)

We are revising the definition of a "responsible official" provided in § 63.1212(a)(2) of the final rule so that it conforms to the definition in the Clean Air Act implementing regulations of § 63.2. We did not intend to alter the statutory definition though § 63.1212(a)(2).

12. Several Citations Are Corrected

In the § 63.1201(a) definition of an automatic waste feed cutoff system, we incorrectly cited § 63.1206(c)(2)(viii) rather than § 63.1206(c)(3)(viii). In § 63.1210(c)(2), we incorrectly cited paragraph (b)(1) rather than (c)(1). In §§ 63.1212(b)(1) and (2), we incorrectly cited requirements for § 63.1206(a)(2) rather than § 63.1206(a)(3). These citations are corrected in today's action.

13. Citation in Table 1 to § 63.1200 Is Corrected

Table 1 to § 63.1200 (3) (see 64 FR 53038) provides an exemption from the requirements of subpart EEE if you burn certain wastes exempt from regulation under section 266; however, the exemption in the table incorrectly cites section 266.100(b). The correct cite is section 266.100(c). We revised the regulations at section 266.100 as part of the HWC MACT final rule, to include a new section 266.100(b) and inadvertently failed to revise the corresponding cite in Table 1 to reflect the change made to section 266.100. Today's action revises Table 1 to reflect the correct cite to section 266.100(c).

B. Correction to the November 19, 1999 Technical Correction

In the November 19, 1999 rule, the Agency amended § 63.1210(b)(1)(iv) by replacing the word "intent" with "intend" (see 64 FR 63212). However, the Agency inadvertently deleted the words "do not." Today's rule reinstates the words "do not" before "intend" in § 63.1210(b)(1)(iv).

C. Corrections to the Related June 19, 1998 Final Rule

1. Gas Turbines Are Added to the List of Approved Burners for Comparable Fuels

The June 19, 1998 (63 FR 33783) final rule establishing the comparable fuels exclusion allows the burning of comparable fuels and syngas fuels in certain combustion sources. We intended comparable fuels and syngas fuels to be burned only in those units capable of managing the excluded hazardous waste. Commenters noted that gas turbines are capable of managing and burning syngas fuels. However, we inadvertently excluded gas turbines from the list of approved comparable/syngas fuel burners. Today's action adds gas turbines to the list of approved comparable/syngas burners under § 261.38(c)(ii)(2).

D. Clarifications of the September 30, 1999 Final Rule

1. Clarification That the Emergency Safety Vent Operating Plan Is To Be Kept in the Operating Record

The preamble to the September 30, 1999 rule states on page 52907 that if you use an emergency safety vent (ESV) in your system design, then you must develop and submit an ESV operating plan with the DOC and NOC. However, there are no requirements in § 63.1206(c)(4)(ii) for submitting the plan because we intended that an ESV operating plan must only be kept in the facility's operating record. The Agency wishes to clarify today that the preamble language requiring submittal of the plan with the DOC and NOC is incorrect and should be disregarded. The ESV operating plan need only be kept in the source's operating record.

2. Preamble Language Regarding a Ten-Minute Average Limit for pH for HCl and Cl_2 Is Incorrect

In § 63.1209, paragraph (o)(3)(iv) requires owners/operators of combustion facilities using wet scrubbers to control hydrochloric acid and chlorine gas to establish a limit on the minimum pH on an hourly rolling average basis (see 64 FR 53062). However, the preamble states that the minimum pH must be established by a dual ten-minute and hourly rolling average (see 64 FR 52952). As several stakeholders pointed out, earlier in the preamble (64 FR 52920) the Agency concluded that, although there may be site-specific circumstances that warrant

Building, 1200 Pennsylvania Avenue, N.W., Washington, DC 20460, at e-mail address hockey.david@epa.gov.

SUPPLEMENTARY INFORMATION:

I. Good Cause Exemption

Section 553 of the Administrative Procedure Act, 5 U.S.C. 553(b)(B), provides that, when an agency for good cause finds that notice and public procedure are impracticable, unnecessary or contrary to the public interest, the agency may issue a rule without providing notice and an opportunity for public comment. EPA has determined that there is good cause for making today's rule final without prior proposal and opportunity for comment because it merely corrects errors and clarifies certain requirements in the Hazardous Waste Combustors NESHAP Final Rule (64 FR 52828, September 30, 1999). Today's action also supplies one omission from the emergency technical correction published on November 19, 1999 (64 FR 63209) and makes one correction to the related June 19, 1998 (63 FR 33783) final rule. With the exception of the emergency technical correction published November 19, 1999, the final rules were subject to notice and comment. Thus, notice and public procedure are unnecessary. EPA finds that this constitutes good cause under 5 U.S.C. 553(b)(B).

II. Reasons and Basis for Today's Action

The Agency has received numerous comments from the regulated community requesting clarification and correction of the rule finalizing NESHAPS for hazardous waste combustors (64 FR 52828, September 30, 1999). The Agency is correcting typographical errors and misprints, as well as clarifying several matters related to preamble statements and regulatory provisions. Today's action also supplies one omission from the emergency technical correction published on November 19, 1999 (64 FR 63209) and makes one correction to the related June 19, 1998 (63 FR 33783) final rule.

The regulated community has also raised other issues and questions through informal comments as well as through litigation that will in many cases require notice and comment rulemaking. The Agency plans to propose changes in the **Federal Register** as quickly as possible that will address many of these other issues.

III. Corrections and Clarifications

A. Corrections to the September 30, 1999 Final Rule

1. Units for Particulate Matter in Appendix A, Method 5i Are Corrected

The unit for particulate matter (PM) concentration given in section 12.2 of Method 5i in appendix A of part 60 is "mg/unit volume" (see 64 FR 53030). However, in the preamble discussion on pages 52927–52928, the PM concentration is expressed as "mg/dscm." The Agency is revising the mg/unit volume in Appendix A, because the PM criteria would change depending on the volume measured. Dry standard cubic meter (dscm) is the intended and more precise measure.

2. Sources That Have Initiated RCRA Closure Requirements Are Exempt: Table 1 to § 63.1200

Table 1 in § 63.1200 (see page 64 FR 53038) explains the exemptions from these regulations for hazardous waste combustors. According to (1)(ii) of that table, previously affected sources have to be in compliance with the closure requirements of subpart G of 40 CFR part 63, 40 CFR part 264, or 40 CFR part 265 to be exempt from the requirements of subpart EEE of part 63. The Agency agrees with commenters that, under our existing regulations, previously affected sources need only have initiated these closure requirements to be exempt, and today we are revising Table 1 of § 63.1200 to reflect this change.

3. Continuous Monitoring of Both Hydrocarbons and Carbon Monoxide Is Not Required: §§ 63.1203, 63.1204, 63.1205, and 63.1209

The preamble to the September 30, 1999 rule states on page 52848 that, to comply with the carbon monoxide and hydrocarbon emission standard, you must continuously monitor and comply with the emission standard for either carbon monoxide or hydrocarbons. If you choose to continuously monitor carbon monoxide, however, you must document compliance with the hydrocarbon standard only during the destruction and removal efficiency (DRE) test or its equivalent.

Several stakeholders note that the regulatory language implementing this provision could be interpreted to mean that continuous monitoring and compliance with both the carbon monoxide and hydrocarbon emissions standards are required. The Agency is today revising the regulatory language to clarify as intended that continuous monitoring and compliance with either the carbon monoxide or hydrocarbon standard is required. See revised §§ 63.1203(a)(5)(i), 63.1203(b)(5)(i), 63.1204(a)(5)(i)(A), 63.1204(a)(5)(ii)(B), 63.1204(b)(5)(i)(A)(*1*), 63.1205(a)(5)(i), 63.1205(b)(5)(i), 63.1209(a)(1)(i), and 63.1209(a)(7).

4. References to Subparts BB and CC of Part 264 Are Redundant: §§ 63.1203(e), 63.1204(g), 63.1205(e)

The regulatory sections that prescribe emission standards for hazardous waste burning incinerators (§ 63.1203), cement kilns (§ 63.1204), and lightweight aggregate kilns (§ 63.1205) each reference subparts BB and CC of 40 CFR part 264 that prescribe emission standards for equipment leaks, tanks, surface impoundments, and containers. Several commenters assert that is is redundant and unnecessary to reference these subparts because they are separately applicable under part 264. We agree and, to avoid redundancy, therefore delete the references from this rule.

5. The 720 Hour Operating Limit is Renewable: §§ 63.1206(b)(5)(i)(C)(1) and 63.1207(h)(2)

The preamble to the September 30, 1999 rule states that the rule allows you to operate after a failed test for purposes of pretesting or performance testing for up to a total of 720 hours of operation, renewable at the discretion of the Administrator. See 64 FR 52914 and § 63.1207(k)(2). We explain in the preamble that the 720 operating period is renewable at the discretion of the Administrator in response to commenters concerns about unforeseen delays in pretesting and testing activities and given that current RCRA rules allow renewals.

Several stakeholders noticed that we did not include allowance for renewals of the 720 hour periods in two other similar provisions of the rule: § 63.1206(b)(5)(i)(C)(*1*) pertaining to restrictions on waste burning after a change in design, operation, or maintenance that may adversely affect compliance; and § 63.1207(h)(2) pertaining to pretesting and performance testing under waived operating limits to satisfy the periodic comprehensive performance testing requirements. This was a drafting oversight and we are today correcting the rule to allow the Administrator to extend the 720 hours of operations for pretesting and performance testing as warranted in these situations as well.

Congress and to the Comptroller General of the United States. EPA will submit a report containing this rule and other required information to the U.S. Senate, the U.S. House of Representatives, and the Comptroller General of the United States prior to publication of the rule in the **Federal Register**. A major rule cannot take effect until 60 days after it is published in the **Federal Register**. This action is not a "major rule" as defined by 5 U.S.C. 804(2). Under section 307(b)(1) of the Clean Air Act, petitions for judicial review of this action must be filed in the United States Court of Appeals for the appropriate circuit by September 8, 2000. Interested parties should comment in response to the proposed rule rather than petition for judicial review, unless the objection arises after the comment period allowed for in the proposal. Filing a petition for reconsideration by the Administrator of this final rule does not affect the finality of this rule for the purposes of judicial review nor does it extend the time within which a petition for judicial review may be filed, and shall not postpone the effectiveness of such rule or action. This action may not be challenged later in proceedings to enforce its requirements. (See section 307(b)(2).)

List of Subjects in 40 CFR Part 52

Environmental protection, Air pollution control, Hydrocarbons, Ozone.

Dated: June 12, 2000.

Mindy S. Lubber,

Regional Administrator, EPA New England.

Part 52 of chapter I, title 40 of the Code of Federal Regulations is amended as follows:

PART 52—[AMENDED]

1. The authority citation for part 52 continues to read as follows:

Authority: 42 U.S.C. 7401 *et seq.*

Subpart EE—New Hampshire

2. Section 52.1520 is amended by adding paragraph (c)(67) to read as follows:

§ 52.1520 Identification of plan.

* * * * *

(c) * * *

(67) Revisions to the State Implementation Plan submitted by the New Hampshire Air Resources Division on September 11, 1998.

(i) Additional materials.

(A) Letter from the New Hampshire Department of Environmental Services dated September 11, 1998 stating a negative declaration for the aerospace coating operations Control Techniques Guideline category.

Subpart OO—Rhode Island

3. Section 52.2070 is amended as follows:

In paragraph (e), the table is amended by adding at the end of the table new citations for two negative declarations to read as follows:

§ 52.2070 Identification of plan.

* * * * *

(e) Non Regulatory.

RHODE ISLAND NON REGULATORY

Name of non regulatory SIP provision	Applicable geographic or non-attainment area	State submittal date/effective date	EPA approved date	Explanations
*	*	*	*	*
Negative Declaration for Synthetic Organic Chemical Manufacturing Industry (SOCMI) Distillation and Reactor Processes Control Techniques Guideline Categories.	Statewide	Submitted 4/5/95	12/2/99, 64 FR 67495	
Negative Declaration for Aerospace Coating Operations Control Techniques Guideline Category.	Statewide	Submitted 3/28/00	July 10, 2000 [Insert FR citation from published date].	

Subpart UU—Vermont

4. Section 52.2370 is amended by adding paragraph (c)(26) to read as follows:

§ 52.2370 Identification of plan.

* * * * *

(c) * * *

(26) Revisions to the State Implementation Plan submitted by the Vermont Air Pollution Control Division on July 28, 1998.

(i) Additional materials.

(A) Letter from the Vermont Air Pollution Control Division dated July 28, 1998 stating a negative declaration for the aerospace coating operations Control Techniques Guideline category.

[FR Doc. 00–16626 Filed 7–7–00; 8:45 am]

BILLING CODE 6560–50–P

ENVIRONMENTAL PROTECTION AGENCY

40 CFR Parts 60, 63, 261, and 270

[FRL–6720–9]

RIN 2050–AE01

NESHAPS: Final Standards for Hazardous Air Pollutants for Hazardous Waste Combustors

AGENCY: Environmental Protection Agency (EPA).

ACTION: Final rule; technical correction.

SUMMARY: On September 30, 1999 the Environmental Protection Agency (EPA) published the Hazardous Waste Combustors NESHAP Final Rule. On November 19, 1999 EPA published the first technical correction of that rule to address a time sensitive situation. Today's rule corrects numerous typographical errors and clarifies several issues from the September 30, 1999 rule, one issue from a closely-related June 19, 1998 rule, and makes one adjustment to the November 19, 1999 technical correction. These corrections and clarifications will make the NESHAP final rule easier to understand and implement.

DATES: This rule is effective on July 10, 2000.

ADDRESSES: The public may obtain a copy of this technical correction at the RCRA Information Center (RIC), located at Crystal Gateway One, 1235 Jefferson Davis Highway, First Floor, Arlington, Virginia.

FOR FURTHER INFORMATION CONTACT: For general information, contact the RCRA Hotline at (800) 424–9346 (toll free) or (703) 412–9812 in the Washington, D.C. metropolitan area. For information on this rule contact David Hockey (5302W), Office of Solid Waste, Ariel Rios

§ 270.22 Specific part B information requirements for boilers and industrial furnaces burning hazardous waste.

When an owner or operator of a cement or lightweight aggregate kiln demonstrates compliance with the air emission standards and limitations in 40 CFR part 63, subpart EEE (i.e., by conducting a comprehensive performance test and submitting a Notification of Compliance), the requirements of this section do not apply. Nevertheless, the Director may apply the provisions of this section, on a case-by-case basis, for purposes of information collection in accordance with §§ 270.10(k) and 270.32(b)(2).

* * * * *

4. Appendix I to § 270.42 is amended by adding an entry 8 in numerical order in section A and revising entry 9 in section L to read as follows:

TABLE 1.—REGULATIONS IMPLEMENTING THE HAZARDOUS AND SOLID WASTE AMENDMENTS OF 1984

Promulgation date	Title of regulation	Federal Register reference	Effective date
* *	* *	* *	*
September 30, 1999	Standards for Hazardous Air Pollutants for Hazardous Waste Combustors.	[Insert FR page numbers].	September 30, 1999.

APPENDIX I TO § 270.42—CLASSIFICATION OF PERMIT MODIFICATION

Modification	Class.
A. General Permit Provisions:	
* * * * *	
8. Changes to remove permit conditions that are no longer applicable (*i.e.*, because the standards upon which they are based are no longer applicable to the facility).	[1] 1
* * * * *	
L. Incinerators, Boilers, and Industrial Furnaces:	
* * * * *	
9. Technology Changes Needed to meet Standards under 40 CFR part 63 (Subpart EEE—National Emission Standards for Hazardous Air Pollutants From Hazardous Waste Combustors), provided the procedures of § 270.42(j) are followed.	[1] 1
* * * * *	

[1] Class 1 modifications requiring prior Agency approval.

5. Section 270.62 is amended by adding introductory text to read as follows:

§ 270.62 Hazardous waste incinerator permits.

When an owner or operator demonstrates compliance with the air emission standards and limitations in 40 CFR part 63, subpart EEE (*i.e.*, by conducting a comprehensive performance test and submitting a Notification of Compliance), the requirements of this section do not apply. Nevertheless, the Director may apply the provisions of this section, on a case-by-case basis, for purposes of information collection in accordance with §§ 270.10(k) and 270.32(b)(2).

* * * * *

6. Section 270.66 is amended by adding introductory text to read as follows:

§ 270.66 Permits for boilers and industrial furnaces burning hazardous waste.

When an owner or operator of a cement or lightweight aggregate kiln demonstrates compliance with the air emission standards and limitations in 40 CFR part 63, subpart EEE (*i.e.*, by conducting a comprehensive performance test and submitting a Notification of Compliance), the requirements of this section do not apply. Nevertheless, the Director may apply the provisions of this section, on a case-by-case basis, for purposes of information collection in accordance with §§ 270.10(k) and 270.32(b)(2).

* * * * *

PART 271—REQUIREMENTS FOR AUTHORIZATION OF STATE HAZARDOUS WASTE PROGRAMS

1. The authority citation for part 271 continues to read as follows:

Authority: 42 U.S.C. 6905, 6912(a), and 6926.

2. Section 271.1(j) is amended by adding the following entries to Table 1 in chronological order by date of publication in the **Federal Register**, to read as follows:

§ 271.1 Purpose and scope.

* * * * *

(j) * * *

TABLE 1.—REGULATIONS IMPLEMENTING THE HAZARDOUS AND SOLID WASTE AMENDMENTS OF 1984

Promulgation date	Title of regulation	Federal Register reference	Effective date
* *	* *	* *	*
September 30, 1999	Standards for Hazardous Air Pollutants for Hazardous Waste Combustors.		Sept. 30, 1999.

[FR Doc. 99-20430 Filed 9-29-99; 8:45 am]
BILLING CODE 6560-50-U

(c) Oxygen correction. (1) Measured pollutant levels must be corrected for the amount of oxygen in the stack gas according to the formula:

$$Pc = Pm \times 14/(E - Y)$$

Where:

Pc is the corrected concentration of the pollutant in the stack gas, Pm is the measured concentration of the pollutant in the stack gas, E is the oxygen concentration on a dry basis in the combustion air fed to the device, and Y is the measured oxygen concentration on a dry basis in the stack.

(2) For devices that feed normal combustion air, E will equal 21 percent. For devices that feed oxygen-enriched air for combustion (that is, air with an oxygen concentration exceeding 21 percent), the value of E will be the concentration of oxygen in the enriched air.

(3) Compliance with all emission standards provided by this subpart must be based on correcting to 7 percent oxygen using this procedure.

* * * * *

5. Section 266.112, paragraph (b)(1) introductory text is amended by adding a sentence at the end and paragraph (b)(2)(i) is revised to read as follows:

§ 266.112 Regulation of residues.

* * * * *

(b) * * *

(1) * * * For polychlorinated dibenzo-p-dioxins and polychlorinated dibenzo-furans, analyses must be performed to determine specific congeners and homologues, and the results converted to 2,3,7,8-TCDD equivalent values using the procedure specified in section 4.0 of appendix IX of this part.

* * * * *

(2) * * *

(i) *Nonmetal constituents.* The concentration of each nonmetal toxic constituent of concern (specified in paragraph (b)(1) of this section) in the waste-derived residue must not exceed the health-based level specified in appendix VII of this part, or the level of detection (using analytical procedures prescribed in SW-846), whichever is higher. If a health-based limit for a constituent of concern is not listed in appendix VII of this part, then a limit of 0.002 micrograms per kilogram or the level of detection (using analytical procedures contained in SW-846, or other appropriate methods), whichever is higher, must be used. The levels specified in appendix VII of this part (and the default level of 0.002 micrograms per kilogram or the level of detection for constituents as identified in Note 1 of appendix VII of this paragraph) are administratively stayed under the condition, for those constituents specified in paragraph (b)(1) of this section, that the owner or operator complies with alternative levels defined as the land disposal restriction limits specified in § 268.43 of this chapter for F039 nonwastewaters. In complying with those alternative levels, if an owner or operator is unable to detect a constituent despite documenting use of best good-faith efforts as defined by applicable Agency guidance or standards, the owner or operator is deemed to be in compliance for that constituent. Until new guidance or standards are developed, the owner or operator may demonstrate such good faith efforts by achieving a detection limit for the constituent that does not exceed an order of magnitude above the level provided by § 268.43 of this chapter for F039 nonwastewaters. In complying with the § 268.43 of this chapter F039 nonwastewater levels for polychlorinated dibenzo-p-dioxins and polychlorinated dibenzo-furans, analyses must be performed for total hexachlorodibenzo-p-dioxins, total hexachlorodibenzofurans, total pentachlorodibenzo-p-dioxins, total pentachlorodibenzofurans, total tetrachlorodibenzo-p-dioxins, and total tetrachlorodibenzofurans.

Note to this paragraph: The administrative stay, under the condition that the owner or operator complies with alternative levels defined as the land disposal restriction limits specified in § 268.43 of this chapter for F039 nonwastewaters, remains in effect until further administrative action is taken and notice is published in the **Federal Register** and the Code of Federal Regulations.

* * * * *

6. Appendix VIII to part 266 is revised to read as follows:

APPENDIX VIII TO PART 266.—ORGANIC COMPOUNDS FOR WHICH RESIDUES MUST BE ANALYZED

Volatiles	Semivolatiles
Benzene	Bis(2-ethylhexyl)phthalate
Toluene	Naphthalene
Carbon tetrachloride	Phenol
Chloroform	Diethyl phthalate
Methylene chloride	Butyl benzyl phthalate
Trichloroethylene	2,4-Dimethylphenol
Tetra chloroethylene	o-Dichlorobenzene
1,1,1-Trichloroethane	m-Dichlorobenzene
Chlorobenzene	p-Dichlorobenzene
cis-1,4-Dichloro-2-butene.	Hexachlorobenzene
Bromochloromethane	2,4,6-Trichlorophenol
Bromodichloromethane.	Fluoranthene
Bromoform	o-Nitrophenol

APPENDIX VIII TO PART 266.—ORGANIC COMPOUNDS FOR WHICH RESIDUES MUST BE ANALYZED—Continued

Volatiles	Semivolatiles
Bromomethane	1,2,4-Trichlorobenzene
Methylene bromide	o-Chlorophenol
Methyl ethyl ketone	Pentachlorophenol
	Pyrene
	Dimethyl phthalate
	Mononitrobenzene
	2,6-Toluene diisocyanate
	Polychlorinated dibenzo-p-dioxins [1]
	Plychlorinated dibenzo-furans [1]

[1] Analyses for polychlorinated dibenzo-p-dioxins and polychlorinated dibenzo-furans are required only for residues collected from areas downstream of the combustion chamber (*e.g.*, ductwork, boiler tubes, heat exchange surfaces, air pollution control devices, *etc.*).

PART 270—EPA ADMINISTERED PERMIT PROGRAMS: THE HAZARDOUS WASTE PERMIT PROGRAM

1. The authority citation for part 270 continues to read as follows:

Authority: 42 U.S.C. 6905, 6912, 6924, 6925, 6927, 6939, and 6974.

2. Section 270.19 is amended by revising the introductory text and adding paragraph (e) to read as follows:

§ 270.19 Specific part B information requirements for incinerators.

* * * * *

Except as § 264.340 of this Chapter and § 270.19(e) provide otherwise, owners and operators of facilities that incinerate hazardous waste must fulfill the requirements of paragraphs (a), (b), or (c) of this section.

* * * * *

(e) When an owner or operator demonstrates compliance with the air emission standards and limitations in 40 CFR part 63, subpart EEE, of this chapter (i.e., by conducting a comprehensive performance test and submitting a Notification of Compliance), the requirements of this section do not apply. Nevertheless, the Director may apply the provisions of this section, on a case-by-case basis, for purposes of information collection in accordance with §§ 270.10(k) and 270.32(b)(2).

3. Section 270.22 is amended by adding introductory text to read as follows:

maintained, and closed in a manner that will ensure protection of human health and the environment. Permits for miscellaneous units are to contain such terms and provisions as necessary to protect human health and the environment, including, but not limited to, as appropriate, design and operating requirements, detection and monitoring requirements, and requirements for responses to releases of hazardous waste or hazardous constituents from the unit. Permit terms and provisions must include those requirements of subparts I through O and subparts AA through CC of this part, part 270, part 63 subpart EEE, and part 146 of this chapter that are appropriate for the miscellaneous unit being permitted. Protection of human health and the environment includes, but is not limited to:

* * * * *

PART 265—INTERIM STATUS STANDARDS FOR OWNERS AND OPERATORS OF HAZARDOUS WASTE TREATMENT, STORAGE, AND DISPOSAL FACILITIES

1. The authority citation for part 265 continues to read as follows:

Authority: 42 U.S.C. 6905, 6906, 6912, 6922, 6923, 6924, 6925, 6935, 6936 and 6937.

2. Section 265.340 is amended by redesignating paragraph (b) as paragraph (c), and adding paragraph (b), to read as follows:

§ 265.340 Applicability.

* * * * *

(b) *Integration of the MACT standards.* (1) Except as provided by paragraph (b)(2) of this section, the standards of this part no longer apply when an owner or operator demonstrates compliance with the maximum achievable control technology (MACT) requirements of part 63, subpart EEE, of this chapter by conducting a comprehensive performance test and submitting to the Administrator a Notification of Compliance under §§ 63.1207(j) and 63.1210(d) of this chapter documenting compliance with the requirements of part 63, subpart EEE of this chapter.

(2) The following requirements continue to apply even where the owner or operator has demonstrated compliance with the MACT requirements of part 63, subpart EEE of this chapter: § 265.351 (closure) and the applicable requirements of subparts A through H, BB and CC of this part.

* * * * *

PART 266—STANDARDS FOR THE MANAGEMENT OF SPECIFIC HAZARDOUS WASTES AND SPECIFIC TYPES OF HAZARDOUS WASTE MANAGEMENT FACILITIES

1. The authority citation for part 266 continues to read as follows:

Authority: Secs. 1006, 2002 (a), 3004, 6905, 6906, 6912, 6922, 6924, 6925, and 6937.

2. Section 266.100 is amended by redesignating paragraphs (b), (c), (d), (e), and (f) as paragraphs (c), (d), (e), (f), and (g), adding paragraph (b), revising introductory text to newly designated paragraph (d)(1), revising the introductory text to newly designated paragraph (d)(3), and adding paragraph (h), to read as follows:

§ 266.100 Applicability.

* * * * *

(b) *Integration of the MACT standards.* (1) Except as provided by paragraph (b)(2) of this section, the standards of this part no longer apply when an affected source demonstrates compliance with the maximum achievable control technology (MACT) requirements of part 63, subpart EEE, of this chapter by conducting a comprehensive performance test and submitting to the Administrator a Notification of Compliance under §§ 63.1207(j) and 63.1210(d) of this chapter documenting compliance with the requirements of subpart EEE. Nevertheless, even after this demonstration of compliance with the MACT standards, RCRA permit conditions that were based on the standards of this part will continue to be in effect until they are removed from the permit or the permit is terminated or revoked, unless the permit expressly provides otherwise.

(2) The following standards continue to apply:

(i) The closure requirements of §§ 266.102(e)(11) and 266.103(l);

(ii) The standards for direct transfer of § 266.111;

(iii) The standards for regulation of residues of § 266.212; and

(iv) The applicable requirements of subparts A through H, BB and CC of parts 264 and 265 of this chapter.

* * * * *

(d) * * *

(1) To be exempt from §§ 266.102 through 266.111, an owner or operator of a metal recovery furnace or mercury recovery furnace must comply with the following requirements, except that an owner or operator of a lead or a nickel-chromium recovery furnace, or a metal recovery furnace that burns baghouse bags used to capture metallic dusts emitted by steel manufacturing, must comply with the requirements of paragraph (d)(3) of this section, and owners or operators of lead recovery furnaces that are subject to regulation under the Secondary Lead Smelting NESHAP must comply with the requirements of paragraph (h) of this section.

* * * * *

(3) To be exempt from §§ 266.102 through 266.111, an owner or operator of a lead or nickel-chromium or mercury recovery furnace, except for owners or operators of lead recovery furnaces subject to regulation under the Secondary Lead Smelting NESHAP,

* * * * *

(h) Starting June 23, 1997, owners or operators of lead recovery furnaces that process hazardous waste for recovery of lead and that are subject to regulation under the Secondary Lead Smelting NESHAP, are conditionally exempt from regulation under this subpart, except for § 266.101. To be exempt, an owner or operator must provide a one-time notice to the Director identifying each hazardous waste burned and specifying that the owner or operator claims an exemption under this paragraph. The notice also must state that the waste burned has a total concentration of non-metal compounds listed in part 261, appendix VIII, of this chapter of less than 500 ppm by weight, as fired and as provided in paragraph (d)(2)(i) of this section, or is listed in appendix XI to this part 266.

3. Section 266.101 is amended by revising paragraph (c)(1) to read as follows:

§ 266.101 Management prior to burning.

* * * * *

(c) *Storage and treatment facilities.* (1) Owners and operators of facilities that store or treat hazardous waste that is burned in a boiler or industrial furnace are subject to the applicable provisions of parts 264, 265, and 270 of this chapter, except as provided by paragraph (c)(2) of this section. These standards apply to storage and treatment by the burner as well as to storage and treatment facilities operated by intermediaries (processors, blenders, distributors, etc.) between the generator and the burner.

* * * * *

4. Section 266.105 is amended by redesignating paragraph (c) as paragraph (d) and adding paragraph (c), to read as follows:

§ 266.105 Standards to control particulate matter.

* * * * *

TABLE 1 TO § 261.38.—DETECTION AND DETECTION LIMIT VALUES FOR COMPARABLE FUEL SPECIFICATION—Continued

Chemical name	CAS No.	Composite value (mg/kg)	Heating value (BTU/lb)	Concentration limit (mg/kg at 10,000 BTU/lb)	Minimum required detection limit (mg/kg)
Endrin aldehyde	7421-93-4	ND	.....	ND	1.4
Endrin Ketone	53494-70-5	ND	.....	ND	1.4
Epichlorohydrin [1-Chloro-2,3-epoxy propane]	106-89-8	ND	.....	ND	30
Ethylidene dichloride [1,1-Dichloroethane]	75-34-3	ND	.....	ND	39
2-Fluoroacetamide	640-19-7	ND	.....	ND	100
Heptachlor	76-44-8	ND	.....	ND	1.4
Heptachlor epoxide	1024-57-3	ND	.....	ND	2.8
Hexachlorobenzene	118-74-1	ND	.....	ND	2400
Hexachloro-1,3-butadiene [Hexachlorobutadiene]	87-68-3	ND	.....	ND	2400
Hexachlorocyclopentadiene	77-47-4	ND	.....	ND	2400
Hexachloroethane	67-72-1	ND	.....	ND	2400
Hexachlorophene	70-30-4	ND	.....	ND	59000
Hexachloropropene [Hexachloropropylene]	1888-71-7	ND	.....	ND	2400
Isodrin	465-73-6	ND	.....	ND	2400
Kepone [Chlordecone]	143-50-0	ND	.....	ND	4700
Lindane [gamma-BHC] [gamma-Hexachlorocyclohexane]	58-89-9	ND	.....	ND	1.4
Methylene chloride [Dichloromethane]	75-09-2	ND	.....	ND	39
4,4'-Methylene-bis(2-chloroaniline)	101-14-4	ND	.....	ND	100
Methyl iodide [Iodomethane]	74-88-4	ND	.....	ND	39
Pentachlorobenzene	608-93-5	ND	.....	ND	2400
Pentachloroethane	76-01-7	ND	.....	ND	39
Pentachloronitrobenzene [PCNB] [Quintobenzene] [Quintozene]	82-68-8	ND	.....	ND	2400
Pentachlorophenol	87-86-5	ND	.....	ND	2400
Pronamide	23950-58-5	ND	.....	ND	2400
Silvex [2,4,5-Trichlorophenoxypropionic acid]	93-72-1	ND	.....	ND	7.0
2,3,7,8-Tetrachlorodibenzo-p-dioxin [2,3,7,8-TCDD]	1746-01-6	ND	.....	ND	30
1,2,4,5-Tetrachlorobenzene	95-94-3	ND	.....	ND	2400
1,1,2,2-Tetrachloroethane	79-34-5	ND	.....	ND	39
Tetrachloroethylene [Perchloroethylene]	127-18-4	ND	.....	ND	39
2,3,4,6-Tetrachlorophenol	58-90-2	ND	.....	ND	2400
1,2,4-Trichlorobenzene	120-82-1	ND	.....	ND	2400
1,1,1-Trichloroethane [Methyl chloroform]	71-55-6	ND	.....	ND	39
1,1,2-Trichloroethane [Vinyl trichloride]	79-00-5	ND	.....	ND	39
Trichloroethylene	79-01-6	ND	.....	ND	39
Trichlorofluoromethane [Trichlormonofluoromethane]	75-69-4	ND	.....	ND	39
2,4,5-Trichlorophenol	95-95-4	ND	.....	ND	2400
2,4,6-Trichlorophenol	88-06-2	ND	.....	ND	2400
1,2,3-Trichloropropane	96-18-4	ND	.....	ND	39
Vinyl Chloride	75-01-4	ND	.....	ND	39

Notes:
NA—Not Applicable.
ND—Nondetect.
[1] 25 or individual halogenated organics listed below.

* * * * *

PART 264—STANDARDS FOR OWNERS AND OPERATORS OF HAZARDOUS WASTE TREATMENT, STORAGE, AND DISPOSAL FACILITIES

1. The authority citation for part 264 continues to read as follows:

Authority: 42 U.S.C. 6905, 6912(a), 6924, and 6925.

2. Section 264.340 is amended by redesignating paragraphs (b), (c), and (d) as paragraphs (c), (d), and (e), respectively, and adding paragraph (b), to read as follows:

§ 264.340 Applicability.

* * * * *

(b) *Integration of the MACT standards.* (1) Except as provided by paragraph (b)(2) of this section, the standards of this part no longer apply when an owner or operator demonstrates compliance with the maximum achievable control technology (MACT) requirements of part 63, subpart EEE of this chapter by conducting a comprehensive performance test and submitting to the Administrator a Notification of Compliance under §§ 63.1207(j) and 63.1210(d) of this chapter documenting compliance with the requirements of subpart EEE of part 63 of this Chapter. Nevertheless, even after this demonstration of compliance with the MACT standards, RCRA permit conditions that were based on the standards of this part will continue to be in effect until they are removed from the permit or the permit is terminated or revoked, unless the permit expressly provides otherwise.

(2) The MACT standards do not replace the closure requirements of § 264.351 or the applicable requirements of subparts A through H, BB and CC of this part.

* * * * *

3. Section 264.601 is amended by revising the introductory text to read as follows:

§ 264.601 Environmental performance standards.

A miscellaneous unit must be located, designed, constructed, operated,

TABLE 1 TO § 261.38.—DETECTION AND DETECTION LIMIT VALUES FOR COMPARABLE FUEL SPECIFICATION—Continued

Chemical name	CAS No.	Composite value (mg/kg)	Heating value (BTU/lb)	Concentration limit (mg/kg at 10,000 BTU/lb)	Minimum required detection limit (mg/kg)
Strychnine	57–24–9	ND	.....	ND	100
Thioacetamide	62–55–5	ND	.....	ND	57
Thiofanox	39196–18–4	ND	.....	ND	100
Thiourea	62–56–6	ND	.....	ND	57
Toluene-2,4-diamine [2,4-Diaminotoluene]	95–80–7	ND	.....	ND	57
Toluene-2,6-diamine [2,6-Diaminotoluene]	823–40–5	ND	.....	ND	57
o-Toluidine	95–53–4	ND	.....	ND	2400
p-Toluidine	106–49–0	ND	.....	ND	100
1,3,5-Trinitrobenzene, [sym-Trinitobenzene]	99–35–4	ND	.....	ND	2400
Halogenated Organic:					
Allyl chloride	107–05–1	ND	.....	ND	39
Aramite	140–57–8	ND	.....	ND	2400
Benzal chloride [Dichloromethyl benzene]	98–87–3	ND	.....	ND	100
Benzyl chloride	100–44–77	ND	.....	ND	100
bis(2-Chloroethyl)ether [Dichoroethyl ether]	111–44–4	ND	.....	ND	2400
Bromoform [Tribromomethane]	75–25–2	ND	.....	ND	39
Bromomethane [Methyl bromide]	74–83–9	ND	.....	ND	39
4-Bromophenyl phenyl ether [p-Bromo diphenyl ether]	101–55–3	ND	.....	ND	2400
Carbon tetrachloride	56–23–5	ND	.....	ND	39
Chlordane	57–74–9	ND	.....	ND	14
p-Chloroaniline	106–47–8	ND	.....	ND	2400
Chlorobenzene	108–90–7	ND	.....	ND	39
Chlorobenzilate	510–15–6	ND	.....	ND	2400
p-Chloro-m-cresol	59–50–7	ND	.....	ND	2400
2-Chloroethyl vinyl ether	110–75–8	ND	.....	ND	39
Chloroform	67–66–3	ND	.....	ND	39
Chloromethane [Methyl chloride]	74–87–3	ND	.....	ND	39
2-Chloronaphthalene [beta-Chloronaphthalene]	91–58–7	ND	.....	ND	2400
2-Chlorophenol [o-Chlorophenol]	95–57–8	ND	.....	ND	2400
Chloroprene [2-Chloro-1,3-butadiene]	1126–99–8	ND	.....	ND	39
2,4-D [2,4-Dichlorophenoxyacetic acid]	94–75–7	ND	.....	ND	7.0
Diallate	2303–16–4	ND	.....	ND	2400
1,2-Dibromo-3-chloropropane	96–12–8	ND	.....	ND	39
1,2-Dichlorobenzene [o-Dichlorobenzene]	95–50–1	ND	.....	ND	2400
1,3-Dichlorobenzene [m-Dichlorobenzene]	541–73–1	ND	.....	ND	2400
1,4-Dichlorobenzene [p-Dichlorobenzene]	106–46–7	ND	.....	ND	2400
3,3'-Dichlorobenzidine	91–94–1	ND	.....	ND	2400
Dichlorodifluoromethane [CFC–12]	75–71–8	ND	.....	ND	39
1,2-Dichloroethane [Ethylene dichloride]	107–06–2	ND	.....	ND	39
1,1-Dichloroethylene [Vinylidene chloride]	75–35–4	ND	.....	ND	39
Dichloromethoxy ethane [Bis(2-chloroethoxy)methane	111–91–1	ND	.....	ND	2400
2,4-Dichlorophenol	120–83–2	ND	.....	ND	2400
2,6-Dichlorophenol	87–65–0	ND	.....	ND	2400
1,2-Dichloropropane [Propylene dichloride]	78–87–5	ND	.....	ND	39
cis-1,3-Dichloropropylene	10061–01–5	ND	.....	ND	39
trans-1,3-Dichloropropylene	10061–02–6	ND	.....	ND	39
1,3-Dichloro-2-propanol	96–23–1	ND	.....	ND	30
Endosulfan I	959–98–8	ND	.....	ND	1.4
Endosulfan II	33213–65–9	ND	.....	ND	1.4
Endrin	72–20–8	ND	.....	ND	1.4

TABLE 1 TO § 261.38.—DETECTION AND DETECTION LIMIT VALUES FOR COMPARABLE FUEL SPECIFICATION—Continued

Chemical name	CAS No.	Composite value (mg/kg)	Heating value (BTU/lb)	Concentration limit (mg/kg at 10,000 BTU/lb)	Minimum required detection limit (mg/kg)
Tetraethyldithiopyrophosphate [Sulfotepp]	3689–24–5	ND	.....	ND	2400
Thiophenol [Benzenethiol]	108–98–5	ND	.....	ND	30
O,O,O-Triethyl phosphorothioate	126–68–1	ND	.....	ND	2400
Nitrogenated Organics:					
Acetonitrile [Methyl cyanide]	75–05–8	ND	.....	ND	39
2-Acetylaminofluorene [2-AAF]	53–96–3	ND	.....	ND	2400
Acrylonitrile	107–13–1	ND	.....	ND	39
4-Aminobiphenyl	92–67–1	ND	.....	ND	2400
4-Aminopyridine	504–24–5	ND	.....	ND	100
Aniline	62–53–3	ND	.....	ND	2400
Benzidine	92–87–5	ND	.....	ND	2400
Dibenz[a,j]acridine	224–42–0	ND	.....	ND	2400
O,O-Diethyl O-pyrazinyl phosphorothioate [Thionazin]	297–97–2	ND	.....	ND	2400
Dimethoate	60–51–5	ND	.....	ND	2400
p-(Dimethylamino) azobenzene [4-Dime thylaminoazobenzene]	60–11–7	ND	.....	ND	2400
3,3′-Dimethylbenzidine	119–93–7	ND	.....	ND	2400
α,α-Dimethylphenethylamine	122–09–8	ND	.....	ND	2400
3,3′-Dimethoxybenzidine	119–90–4	ND	.....	ND	100
1,3-Dinitrobenzene [m-Dinitrobenzene]	99–65–0	ND	.....	ND	2400
4,6-Dinitro-o-cresol	534–52–1	ND	.....	ND	2400
2,4-Dinitrophenol	51–28–5	ND	.....	ND	2400
2,4-Dinitrotoluene	121–14–2	ND	.....	ND	2400
2,6-Dinitrotoluene	606–20–2	ND	.....	ND	2400
Dinoseb [2-sec-Butyl-4,6-dinitrophenol]	88–85–7	ND	.....	ND	2400
Diphenylamine	122–39–4	ND	.....	ND	2400
Ethyl carbamate [Urethane]	51–79–6	ND	.....	ND	100
Ethylenethiourea (2-Imidazolidinethione)	96–45–7	ND	.....	ND	110
Famphur	52–85–7	ND	.....	ND	2400
Methacrylonitrile	126–98–7	ND	.....	ND	39
Methapyrilene	91–80–5	ND	.....	ND	2400
Methomyl	16752–77–5	ND	.....	ND	57
2-Methyllactonitrile, [Acetone cyanohydrin]	75–86–5	ND	.....	ND	100
Methyl parathion	298–00–0	ND	.....	ND	2400
MNNG (N-Metyl-N-nitroso-N′-nitroguanidine)	70–25–7	ND	.....	ND	110
1-Naphthylamine, [α-Naphthylamine]	134–32–7	ND	.....	ND	2400
2-Naphthylamine, [β-Naphthylamine]	91–59–8	ND	.....	ND	2400
Nicotine	54–11–5	ND	.....	ND	100
4-Nitroaniline, [p-Nitroaniline]	100–01–6	ND	.....	ND	2400
Nitrobenzene	98–95–3	ND	.....	ND	2400
p-Nitrophenol, [p-Nitrophenol]	100–02–7	ND	.....	ND	2400
5-Nitro-o-toluidine	99–55–8	ND	.....	ND	2400
N-Nitrosodi-n-butylamine	924–16–3	ND	.....	ND	2400
N-Nitrosodiethylamine	55–18–5	ND	.....	ND	2400
N-Nitrosodiphenylamine, [Diphenylnitrosamine]	86–30–6	ND	.....	ND	2400
N-Nitroso-N-methylethylamine	10595–95–6	ND	.....	ND	2400
N-Nitrosomorpholine	59–89–2	ND	.....	ND	2400
N-Nitrosopiperidine	100–75–4	ND	.....	ND	2400
N-Nitrosopyrrolidine	930–55–2	ND	.....	ND	2400
2-Nitropropane	79–46–9	ND	.....	ND	30
Parathion	56–38–2	ND	.....	ND	2400
Phenacetin	62–44–2	ND	.....	ND	2400
1,4-Phenylene diamine, [p-Phenylenediamine]	106–50–3	ND	.....	ND	2400
N-Phenylthiourea	103–85–5	ND	.....	ND	57
2-Picoline [alpha-Picoline]	109–06–8	ND	.....	ND	2400
Propylthioracil, [6-Propyl-2-thiouracil]	51–52–5	ND	.....	ND	100
Pyridine	110–86–1	ND	.....	ND	2400

TABLE 1 TO § 261.38.—DETECTION AND DETECTION LIMIT VALUES FOR COMPARABLE FUEL SPECIFICATION—Continued

Chemical name	CAS No.	Composite value (mg/kg)	Heating value (BTU/lb)	Concentration limit (mg/kg at 10,000 BTU/lb)	Minimum required detection limit (mg/kg)
Silver, total	7440-22-4	ND	.....	2.3	.....
Thallium, total	7440-28-0	ND	.....	23	.....
Hydrocarbons:					
Benzo[a]anthracene	56-55-3	ND	.....	2400	.....
Benzene	71-43-2	8000	19600	4100	.....
Benzo[b]fluoranthene	205-99-2	ND	.....	2400	.....
Benzo[k]fluoranthene	207-08-9	ND	.....	2400	.....
Benzo[a]pyrene	50-32-8	ND	.....	2400	.....
Chrysene	218-01-9	ND	.....	2400	.....
Dibenzo[a,h]anthracene	53-70-3	ND	.....	2400	.....
7,12-Dimethylbenz[a]anthracene	57-97-6	ND	.....	2400	.....
Fluoranthene	206-44-0	ND	.....	2400	.....
Indeno(1,2,3-cd)pyrene	193-39-5	ND	.....	2400	.....
3-Methylcholanthrene	56-49-5	ND	.....	2400	.....
Naphthalene	91-20-3	6200	19400	3200	.....
Toluene	108-88-3	69000	19400	36000	.....
Oxygenates:					
Acetophenone	98-86-2	ND	.....	2400	.....
Acrolein	107-02-8	ND	.....	39	.....
Allyl alcohol	107-18-6	ND	.....	30	.....
Bis(2-ethylhexyl)phthalate [Di-2-ethylhexyl phthalate]	117-81-7	ND	.....	2400	.....
Butyl benzyl phthalate	85-68-7	ND	.....	2400	.....
o-Cresol [2-Methyl phenol]	95-48-7	ND	.....	2400	.....
m-Cresol [3-Methyl phenol]	108-39-4	ND	.....	2400	.....
p-Cresol [4-Methyl phenol]	106-44-5	ND	.....	2400	.....
Di-n-butyl phthalate	84-74-2	ND	.....	2400	.....
Diethyl phthalate	84-66-2	ND	.....	2400	.....
2,4-Dimethylphenol	105-67-9	ND	.....	2400	.....
Dimethyl phthalate	131-11-3	ND	.....	2400	.....
Di-n-octyl phthalate	117-84-0	ND	.....	2400	.....
Endothall	145-73-3	ND	.....	100	.....
Ethyl methacrylate	97-63-2	ND	.....	39	.....
2-Ethoxyethanol [Ethylene glycol monoethyl ether]	110-80-5	ND	.....	100	.....
Isobutyl alcohol	78-83-1	ND	.....	39	.....
Isosafrole	120-58-1	ND	.....	2400	.....
Methyl ethyl ketone [2-Butanone]	78-93-3	ND	.....	39	.....
Methyl methacrylate	80-62-6	ND	.....	39	.....
1,4-Naphthoquinone	130-15-4	ND	.....	2400	.....
Phenol	108-95-2	ND	.....	2400	.....
Propargyl alcohol [2-Propyn-1-ol]	107-19-7	ND	.....	30	.....
Safrole	94-59-7	ND	.....	2400	.....
Sulfonated Organics:					
Carbon disulfide	75-15-0	ND	.....	ND	39
Disulfoton	298-04-4	ND	.....	ND	2400
Ethyl methanesulfonate	62-50-0	ND	.....	ND	2400
Methyl methanesulfonate	66-27-3	ND	.....	ND	2400
Phorate	298-02-2	ND	.....	ND	2400
1,3-Propane sultone	1120-71-4	ND	.....	ND	100

result of a failure in the CEMS and allowed in the source's quality assurance plan at the time of the CMS failure. One-minute averages must not be rounded, smoothed, or disregarded.

6.5.2 Ten Minute Rolling Average Equation. The ten minute rolling average must be calculated using the following equation:

$$C_{RA} = \sum_{i=1}^{10} \frac{\bar{c}_i}{10}$$

Where:

C_{RA} = The concentration of the standard, expressed as a rolling average

$\bar{c}_i$ = a one minute average

6.5.3 *Hourly Rolling Average Equation for CO and THC CEMS and Operating Parameter Limits.* The rolling average, based on a specific number integer of hours, must be calculated using the following equation:

$$C_{RA} = \sum_{i=1}^{60} \frac{\bar{c}_i}{60}$$

Where:

c_{RA} = The concentration of the standard, expressed as a rolling average

$\bar{c}_i$ = a one minute average

6.5.4 Averaging Periods for CEMS other than CO and THC. The averaging period for CEMS other than CO and THC CEMS must be calculated as a rolling average of all one-hour values over the averaging period. An hourly average is comprised of 4 measurements taken at equally spaced time intervals, or at most every 15 minutes. Fewer than 4 measurements might be available within an hour for reasons such as facility downtime or CEMS calibration. If at least two measurements (30 minutes of data) are available, an hourly average must be calculated. The *n*-hour rolling average is calculated by averaging the *n* most recent hourly averages.

6.6 Units of the Standards for the Purposes of Recording and Reporting Emissions. Emissions must be recorded and reported expressed after correcting for oxygen, temperature, and moisture. Emissions must be reported in metric, but may also be reported in the English system of units, at 7 percent oxygen, 20°C, and on a dry basis.

6.7 Rounding and Significant Figures. Emissions must be rounded to two significant figures using ASTM procedure E-29-90 or its successor. Rounding must be avoided prior to rounding for the reported value.

7. Bibliography

1. 40 CFR Part 60, Appendix F, "Quality Assurance Procedures: Procedure 1. Quality Assurance Requirements for Gas Continuous Emission Monitoring Systems Used For Compliance Determination".

Subpart LLL—National Emission Standards for Hazardous Air Pollutants From the Portland Cement Manufacturing Industry

3. Section 63.1350 is amended by revising paragraph (k) to read as follows:

§ 63.1350 Monitoring requirements.

* * * * *

(k) The owner or operator of an affected source subject to a particulate matter standard under § 63.1343 shall install, calibrate, maintain, and operate a particulate matter continuous emission monitoring system (PM CEMS) to measure the particulate matter discharged to the atmosphere. All requirements relating to installation, calibration, maintenance, operation or performance of the PM CEMS and implementation of the PM CEMS requirement are deferred pending further rulemaking.

* * * * *

PART 260—HAZARDOUS WASTE MANAGEMENT SYSTEM: GENERAL

1. The authority citation for part 260 continues to read as follows:

Authority: 42 U.S.C. 6905, 6912(a), 6921–6927, 6930, 6934, 6935, 6937, 6938, 6939, and 6974.

Subpart B—Definitions

2. Section 260.10 is amended by adding definitions in alphabetical order to read as follows:

§ 260.10 Definitions.

* * * * *

Dioxins and furans (D/F) means tetra, penta, hexa, hepta, and octa-chlorinated dibenzo dioxins and furans.

* * * * *

TEQ means toxicity equivalence, the international method of relating the toxicity of various dioxin/furan congeners to the toxicity of 2,3,7,8-tetrachlorodibenzo-p-dioxin.

* * * * *

PART 261—IDENTIFICATION AND LISTING OF HAZARDOUS WASTE

1. The authority citation for part 261 continues to read as follows:

Authority: 42 U.S.C. 6905, 6912(a), 6921, 6922, 6924(y), and 6938.

2. Section 261.38 is amended by revising Table 1 to read as follows:

§ 261.38 Comparable/Syngas Fuel Exclusion.

* * * * *

TABLE 1 TO § 261.38.—DETECTION AND DETECTION LIMIT VALUES FOR COMPARABLE FUEL SPECIFICATION

Chemical name	CAS No.	Composite value (mg/kg)	Heating value (BTU/lb)	Concentration limit (mg/kg at 10,000 BTU/lb)	Minimum required detection limit (mg/kg)
Total Nitrogen as N	NA	9000	18400	4900	.....
Total Halogens as Cl	NA	1000	18400	540	.....
Total Organic Halogens as Cl	NA	.....	.....	(1)	.....
Polychlorinated biphenyls, total [Arocolors, total]	1336–36–3	ND	.....	ND	1.4
Cyanide, total	57–12–5	ND	.....	ND	1.0
Metals:					
Antimony, total	7440–36–012	ND	.....	0.23	.....
Arsenic, total	7440–38–2	ND	.....	0.23	.....
Barium, total	7440–39–3	ND	.....	23	.....
Beryllium, total	7440–41–7	ND	.....	1.2	.....
Cadmium, total	7440–43–9	.....	ND	.....	1.2
Chromium, total	7440–47–3	ND	.....	2.3	.....
Cobalt	7440–48–4	ND	.....	4.6	.....
Lead, total	7439–92–1	57	18100	31	.....
Manganese	7439–96–5	ND	.....	1.2	.....
Mercury, total	7439–97–6	ND	.....	0.25	.....
Nickel, total	7440–02–0	106	18400	58	.....
Selenium, total	7782–49–2	ND	.....	0.23	.....

1. QA responsibilities (including maintaining records, preparing reports, reviewing reports).
2. Schedules for the daily checks, periodic audits, and preventive maintenance.
3. Check lists and data sheets.
4. Preventive maintenance procedures.
5. Description of the media, format, and location of all records and reports.
6. Provisions for a review of the CEMS data at least once a year. Based on the results of the review, the owner or operator must revise or update the QA plan, if necessary.

d. CD and ZD Assessment and Daily System Audit

4.1 *CD and ZD Requirement.* Owners and operators must check, record, and quantify the ZD and the CD at least once daily (approximately 24 hours) in accordance with the method prescribed by the manufacturer. The CEMS calibration must, at a minimum, be adjusted whenever the daily ZD or CD exceeds the limits in the Performance Specifications. If, on any given ZD and/or CD check the ZD and/or CD exceed(s) two times the limits in the Performance Specifications, or if the cumulative adjustment to the ZD and/or CD (see Section 4.2) exceed(s) three times the limits in the Performance Specifications, hazardous waste burning must immediately cease and the CEMS must be serviced and recalibrated. Hazardous waste burning cannot resume until the owner or operator documents that the CEMS is in compliance with the Performance Specifications by carrying out an ACA.

4.2 *Recording Requirements for Automatic ZD and CD Adjusting Monitors.* Monitors that automatically adjust the data to the corrected calibration values must record the unadjusted concentration measurement prior to resetting the calibration, if performed, or record the amount of the adjustment.

4.3 *Daily System Audit.* The audit must include a review of the calibration check data, an inspection of the recording system, an inspection of the control panel warning lights, and an inspection of the sample transport and interface system (e.g., flowmeters, filters, etc.) as appropriate.

4.4 *Data Recording and Reporting.* All measurements from the CEMS must be retained in the operating record for at least 5 years.

5. Performance Evaluation

Carbon Monoxide (CO), Oxygen (O_2), and Hydrocarbon (HC) CEMS. An Absolute Calibration Audit (ACA) must be conducted quarterly, and a Relative Accuracy Test Audit (RATA) (if applicable, see sections 5.1 and 5.2) must be conducted yearly. An Interference Response Tests must be performed whenever an ACA or a RATA is conducted. When a performance test is also required under § 63.1207 to document compliance with emission standards, the RATA must coincide with the performance test. The audits must be conducted as follows.

5.1 *Relative Accuracy Test Audit (RATA).* This requirement applies to O_2 and CO CEMS. The RATA must be conducted at least yearly. Conduct the RATA as described in the RA test procedure (or alternate procedures section) described in the applicable Performance Specifications. In addition, analyze the appropriate performance audit samples received from the EPA as described in the applicable sampling methods.

5.2 *Absolute Calibration Audit (ACA).* The ACA must be conducted at least quarterly except in a quarter when a RATA (if applicable, see section 5.1) is conducted instead. Conduct an ACA as described in the calibration error (CE) test procedure described in the applicable Performance Specifications.

5.3 *Interference Response Test.* The interference response test must be conducted whenever an ACA or RATA is conducted. Conduct an interference response test as described in the applicable Performance Specifications.

5.4 *Excessive Audit Inaccuracy.* If the RA from the RATA or the CE from the ACA exceeds the criteria in the applicable Performance Specifications, hazardous waste burning must cease immediately. Hazardous waste burning cannot resume until the owner or operator takes corrective measures and audit the CEMS with a RATA to document that the CEMS is operating within the specifications.

6. Other Requirements

6.1 *Performance Specifications.* CEMS used by owners and operators of HWCs must comply with the following performance specifications in appendix B to part 60 of this chapter:

TABLE I: PERFORMANCE SPECIFICATIONS FOR CEMS

CEMS	Performance specification
Carbon monoxide	4B
Oxygen	4B
Total hydrocarbons	8A

6.2 *Downtime due to Calibration.* Facilities may continue to burn hazardous waste for a maximum of 20 minutes while calibrating the CEMS. If all CEMS are calibrated at once, the facility must have twenty minutes to calibrate all the CEMS. If CEMS are calibrated individually, the facility must have twenty minutes to calibrate each CEMS. If the CEMS are calibrated individually, other CEMS must be operational while the individual CEMS is being calibrated.

6.3 Span of the CEMS.

6.3.1 *CO CEMS.* The CO CEM must have two ranges, a low range with a span of 200 ppmv and a high range with a span of 3000 ppmv at an oxygen correction factor of 1. A one-range CEM may be used, but it must meet the performance specifications for the low range in the specified span of the low range.

6.3.2 *O_2 CEMS.* The O_2 CEM must have a span of 25 percent. The span may be higher than 25 percent if the O_2 concentration at the sampling point is greater than 25 percent.

6.3.3 *HC CEMS.* The HC CEM must have a span of 100 ppmv, expressed as propane, at an oxygen correction factor of 1.

6.3.4 *CEMS Span Values.* When the Oxygen Correction Factor is Greater than 2. When an owner or operator installs a CEMS at a location of high ambient air dilution, *i.e.*, where the maximum oxygen correction factor as determined by the permitting agency is greater than 2, the owner or operator must install a CEM with a lower span(s), proportionate to the larger oxygen correction factor, than those specified above.

6.3.5 *Use of Alternative Spans.* Owner or operators may request approval to use alternative spans and ranges to those specified. Alternate spans must be approved in writing in advance by the Administrator. In considering approval of alternative spans and ranges, the Administrator will consider that measurements beyond the span will be recorded as values at the maximum span for purposes of calculating rolling averages.

6.3.6 *Documentation of Span Values.* The span value must be documented by the CEMS manufacturer with laboratory data.

6.4.1 *Moisture Correction.* Method 4 of appendix A, part 60 of this chapter, must be used to determine moisture content of the stack gasses.

6.4.2 *Oxygen Correction Factor.* Measured pollutant levels must be corrected for the amount of oxygen in the stack according to the following formula:

$$P_c = P_m \times 14/(E - Y)$$

Where:

P_c = concentration of the pollutant or standard corrected to 7 percent oxygen, dry basis;

P_m = measured concentration of the pollutant, dry basis;

E = volume fraction of oxygen in the combustion air fed into the device, on a dry basis (normally 21 percent or 0.21 if only air is fed);

Y = measured fraction of oxygen on a dry basis at the sampling point.

The oxygen correction factor is:

$$OCF = 14/(E - Y)$$

6.4.3 *Temperature Correction.* Correction values for temperature are obtainable from standard reference materials.

6.5 *Rolling Average.* A rolling average is the arithmetic average of all one-minute averages over the averaging period.

6.5.1 *One-Minute Average for CO and HC CEMS and Operating Parameter Limits.* One-minute averages are the arithmetic average of the four most recent 15-second observations and must be calculated using the following equation:

$$\bar{c} = \sum_{i=1}^{4} \frac{c_i}{4}$$

Where:

$\bar{c}$ = the one minute average

c_i = a fifteen-second observation from the CEM

Fifteen second observations must not be rounded or smoothed. Fifteen-second observations may be disregarded only as a

TABLE 1 TO SUBPART EEE.—GENERAL PROVISIONS APPLICABLE TO SUBPART EEE—Continued

Reference	Applies to Subparts EEE	Explanation
63.10	Yes	Except reports of performance test results required under § 63.10(d)(2) may be submitted up to 90 days after completion of the test.
63.11	No.	
63.12–63.15	Yes.	

Appendix to Subpart EEE of Part 63—Quality Assurance Procedures for Continuous Emissions Monitors Used for Hazardous Waste Combustors

1. Applicability and Principle

1.1 Applicability. a. These quality assurance requirements are used to evaluate the effectiveness of quality control (QC) and quality assurance (QA) procedures and the quality of data produced by continuous emission monitoring systems (CEMS) that are used for determining compliance with the emission standards on a continuous basis as specified in the applicable regulation. The QA procedures specified by these requirements represent the minimum requirements necessary for the control and assessment of the quality of CEMS data used to demonstrate compliance with the emission standards provided under subpart EEE of this part 63. Owners and operators must meet these minimum requirements and are encouraged to develop and implement a more extensive QA program. These requirements superede those found in part 60, appendix F of this chapter. Appendix F does not apply to hazardous waste-burning devices.

b. Data collected as a result of the required QA and QC measures are to be recorded in the operating record. In addition, data collected as a result of CEMS performance evaluations required by Section 5 in conjunction with an emissions performance test are to be submitted to the Administrator as provided by § 63.8(e)(5). These data are to be used by both the Agency and the CEMS operator in assessing the effectiveness of the CEMS QA and QC procedures in the maintenance of acceptable CEMS operation and valid emission data.

1.2 Principle. The QA procedures consist of two distinct and equally important functions. One function is the assessment of the quality of the CEMS data by estimating accuracy. The other function is the control and improvement of the quality of the CEMS data by implementing QC policies and corrective actions. These two functions form a control loop. When the assessment function indicates that the data quality is inadequate, the source must immediately stop burning hazardous waste. The CEM data control effort must be increased until the data quality is acceptable before hazardous waste burning can resume.

a. In order to provide uniformity in the assessment and reporting of data quality, this procedure explicitly specifies the assessment methods for response drift and accuracy. The methods are based on procedures included in the applicable performance specifications provided in appendix B to part 60 of this chapter. These procedures also require the analysis of the EPA audit samples concurrent with certain reference method (RM) analyses as specified in the applicable RM's.

b. Because the control and corrective action function encompasses a variety of policies, specifications, standards, and corrective measures, this procedure treats QC requirements in general terms to allow each source owner or operator to develop a QC system that is most effective and efficient for the circumstances.

2. Definitions

2.1 *Continuous Emission Monitoring System (CEMS).* The total equipment required for the determination of a pollutant concentration. The system consists of the following major subsystems:

2.1.1 *Sample Interface.* That portion of the CEMS used for one or more of the following: sample acquisition, sample transport, and sample conditioning, or protection of the monitor from the effects of the stack effluent.

2.1.2 *Pollutant Analyzer.* That portion of the CEMS that senses the pollutant concentration and generates a proportional output.

2.1.3 *Diluent Analyzer.* That portion of the CEMS that senses the diluent gas (O2) and generates an output proportional to the gas concentration.

2.1.4 *Data Recorder.* That portion of the CEMS that provides a permanent record of the analyzer output. The data recorder may provide automatic data reduction and CEMS control capabilities.

2.2 *Relative Accuracy (RA).* The absolute mean difference between the pollutant concentration determined by the CEMS and the value determined by the reference method (RM) plus the 2.5 percent error confidence coefficient of a series of test divided by the mean of the RM tests or the applicable emission limit.

2.3 *Calibration Drift (CD).* The difference in the CEMS output readings from the established reference value after a stated period of operation during which no unscheduled maintenance, repair, or adjustment took place.

2.4 *Zero Drift (ZD).* The difference in CEMS output readings at the zero pollutant level after a stated period of operation during which no unscheduled maintenance, repair, or adjustment took place.

2.5 *Calibration Standard.* Calibration standards produce a known and unchanging response when presented to the pollutant analyzer portion of the CEMS, and are used to calibrate the drift or response of the analyzer.

2.6 *Relative Accuracy Test Audit (RATA).* Comparison of CEMS measurements to reference method measurements in order to evaluate relative accuracy following procedures and specification given in the appropriate performance specification.

2.7 *Absolute Calibration Audit (ACA).* Equivalent to calibration error (CE) test defined in the appropriate performance specification using NIST traceable calibration standards to challenge the CEMS and assess accuracy.

2.8 *Rolling Average.* The average emissions, based on some (specified) time period, calculated every minute from a one-minute average of four measurements taken at 15-second intervals. CEMS other than carbon monoxide and total hydrocarbon CEMS may have rolling averages calculated every hour from a one-hour average of at least four measurements taken at intervals not exceeding 15 minutes.

c. QA/QC Requirements

3.1 QC Requirements. a. Each owner or operator must develop and implement a QC program. At a minimum, each QC program must include written procedures describing in detail complete, step-by-step procedures and operations for the following activities.

1. Checks for component failures, leaks, and other abnormal conditions.
2. Calibration of CEMS.
3. CD determination and adjustment of CEMS.
4. Integration of CEMS with the automatic waste feed cutoff (AWFCO) system.
5. Preventive Maintenance of CEMS (including spare parts inventory).
6. Data recording, calculations, and reporting.
7. Checks of record keeping.
8. Accuracy audit procedures, including sampling and analysis methods.
9. Program of corrective action for malfunctioning CEMS.
10. Operator training and certification.
11. Maintaining and ensuring current certification or naming of cylinder gasses, metal solutions, and particulate samples used for audit and accuracy tests, daily checks, and calibrations.

b. Whenever excessive inaccuracies occur for two consecutive quarters, the current written procedures must be revised or the CEMS modified or replaced to correct the deficiency causing the excessive inaccuracies. These written procedures must be kept on record and available for inspection by the enforcement agency.

3.2 QA Requirements. Each source owner or operator must develop and implement a QA plan that includes, at a minimum, the following.

TABLE 1 TO SUBPART EEE.—GENERAL PROVISIONS APPLICABLE TO SUBPART EEE

Reference	Applies to Subparts EEE	Explanation
63.1	Yes.	
63.2	Yes.	
63.3	Yes.	
63.4	Yes.	
63.5	Yes.	
63.6(a), (b), (c), and (d)	Yes.	
63.6(e)	Yes	Except § 63.1206(b)(1) and (c)(2)(ii) require compliance with the emission standards during startup, shutdown, and malfunction if hazardous waste is burned or remains in the combustion chamber during those periods of operation.
63.6(f)(1)	Yes	Same exception that applies to § 63.6(e).
63.6(f)(2)	Yes	Except that the performance test requirements of § 63.1207 apply instead of § 63.6(f)(2)(iii)(B).
63.6(f)(3)	Yes.	
63.6(g)	Yes.	
63.6(h)	Yes	Except only cement kilns are subject to an opacity standard, and § 63.1206(b)(1) requires compliance with the opacity standard at all times that hazardous waste is in the combustion chamber.
63.6(i)	Yes	Section § 63.1213 specifies that the compliance date may also be extended for inability to install necessary emission control equipment by the compliance date because of implementation of pollution prevention or waste minimization controls.
63.6(j)	Yes.	
63.7(a)	Yes.	
63.7(b)	Yes	Except § 63.1207(e) requires you to submit the site-specific test plan for approval at least one year before the comprehensive performance test is scheduled to begin.
63.7(c)	Yes	Except § 63.1207(e) requires you to submit the site-specific test plan (including the quality assurance provisions under § 63.7(c)) for approval at least one year before the comprehensive performance test is scheduled to begin.
63.7(d)	Yes.	
63.7(e)	Yes	Except: (1) § 63.1207 prescribes operations during performance testing; (2) § 63.1209 specifies operating limits that will be established during performance testing (such that testing is likely to be representative of the extreme range of normal performance); and (3) §§ 63.1206(b)(1) and (c)(2) require compliance with the emission standards during startup, shutdown, and malfunction if hazardous waste is burned or remains in the combustion chamber during those periods of operation.
63.7(f)	Yes.	
63.7(g)	Yes	Except that § 63.1207(j) requiring the results of the performance test (and the notification of compliance) to be submitted within 90 days of completing the test, unless the Administrator grants a time extension, applies instead of § 63.7(g)(1).
63.7(h)	Yes	Except § 63.1207(c)(2) allows data in lieu of the initial comprehensive performance test, and § 63.1207(m) provides a waiver of certain performance tests. You must submit requests for these waivers with the site-specific test plan.
63.8(a) and (b)	Yes.	
63.8(c)	Yes	Except: (1) § 63.1211(d) that requires CMS to be installed, calibrated, and operational on the compliance date applies instead of § 63.8(c)(3); (2) the performance specifications for CO, HC, and O_2 CEMS in subpart B, part 60, of this chapter requiring that the detectors measure the sample concentration at least once every 15 seconds for calculating an average emission level once every 60 seconds apply instead of § 63.8(c)(4)(ii); and (3) §§ 63.8(c)(4)(i), (c)(5), and (c)(7)(i)(C) pertaining to COMS apply only to cement kilns.
63.8(d)	Yes.	
63.8(e)	Yes	Except § 63.1207(e) requiring sources to submit the site-specific comprehensive performance test plan and the CMS performance evaluation plan for approval at least one year prior to the planned test date applies instead of §§ 63.8(e)(2) and (3)(iii).
63.8(f)	Yes.	
63.8(g)	Yes	Except § 63.8(g)(2) regarding data reduction for COMS applies only to cement kilns.
63.9(a)	Yes.	
63.9(b)	Yes	NOTE: Section 63.9(b)(1)(ii) pertains to notification requirements for area sources that become a major source, and § 93.9(b)(2)(v) requires a major source determination. Although area sources are subject to all provisions of this subpart (Subpart EEE), these sections nonetheless apply because the major source determination may affect the applicability of part 63 standards or title V permit requirements to other sources (i.e., other than a hazardous waste combustor) of hazardous air pollutants at the facility.
63.9(c) and (d)	Yes.	
63.9(e)	Yes	Except § 63.1207(e) which requires the comprehensive performance test plan to be submitted for approval one year prior to the planned performance test date applies instead of § 63.9(e).
63.9(f)	No.	
63.9(g)	Yes	Except § 63.9(g)(2) pertaining to COMS does not apply.
63.9(h)	Yes	Except § 63.1207(j) requiring the notification of compliance to be submitted within 90 days of completing a performance test unless the Administrator grants a time extension applies instead of § 63.9(h)(2)(ii). *Note:* Even though area sources are subject to this subpart, the major source determination required by § 63.9(h)(2)(i)(E) is applicable to hazardous waste combustors for the reasons discussed above.
63.9(i) and (j)	Yes.	

(e) *Data compression.* You may submit a written request to the Administrator for approval to use data compression techniques to record data from CMS, including CEMS, on a frequency less than that required by § 63.1209. You must submit the request for review and approval as part of the comprehensive performance test plan.

(1) You must record a data value at least once each ten minutes.

(2) For each CEMS or operating parameter for which you request to use data compression techniques, you must recommend:

(i) A fluctuation limit that defines the maximum permissible deviation of a new data value from a previously generated value without requiring you to revert to recording each one-minute value.

(A) If you exceed a fluctuation limit, you must record each one-minute value for a period of time not less than ten minutes.

(B) If neither the fluctuation limit nor the data compression limit are exceeded during that period of time, you may reinitiate recording data values on a frequency of at least once each ten minutes; and

(ii) A data compression limit defined as the closest level to an operating parameter limit or emission standard at which reduced data recording is allowed.

(A) Within this level and the operating parameter limit or emission standard, you must record each one-minute average.

(B) The data compression limit should reflect a level at which you are unlikely to exceed the specific operating parameter limit or emission standard, considering its averaging period, with the addition of a new one-minute average.

§ 63.1212 What are the other requirements pertaining to the NIC and associated progress reports?

(a) *Certification of intent to comply.* (1) The Notice of Intent to Comply (NIC) and Progress Report must contain the following certification signed and dated by an authorized representative of the source: I certify under penalty of law that I have personally examined and am familiar with the information submitted in this document and all attachments and that, based on my inquiry of those individuals immediately responsible for obtaining the information, I believe that the information is true, accurate, and complete. I am aware that there are significant penalties for submitting false information, including the possibility of fine and imprisonment.

(2) An authorized representative should be a responsible corporate officer (for a corporation), a general partner (for a partnership), the proprietor (of a sole proprietorship), or a principal executive officer or ranking elected official (for a municipality, State, Federal, or other public agency).

(b) *Sources that begin burning hazardous waste after September 30, 1999.* (1) If you begin to burn hazardous waste after September 30, 1999 but prior to June 30, 2000 you must comply with the requirements of §§ 63.1206(a)(2), 63.1210(b) and (c), 63.1211(b), and paragraph (a) of this section, and associated time frames for public meetings and document submittals.

(2) If you intend to begin burning hazardous waste after June 30, 2000, you must comply with the requirements of §§ 63.1206(a)(2), 63.1210(b) and (c), 63.1211(b), and paragraph (a) of this section prior to burning hazardous waste. In addition:

(i) You must make a draft NIC available to the public, notice the public meeting, conduct a public meeting, and submit a final NIC prior to burning hazardous waste; and

(ii) You must submit your progress report at the time you submit your final NIC.

Other

§ 63.1213 How can the compliance date be extended to install pollution prevention or waste minimization controls?

(a) *Applicability.* You may request from the Administrator or State with an approved Title V program an extension of the compliance data of up to one year. An extension may be granted if you can reasonably document that the installation of pollution prevention or waste minimization measures will significantly reduce the amount and/or toxicity of hazardous wastes entering the feedstream(s) of the hazardous waste combustor(s), and that you could not install the necessary control measures and comply with the emission standards and operating requirements of this subpart within three years after their effective date.

(b) *Requirements for requesting an extension.* (1) You must make your requests for a (up to) one-year extension in writing, and it must be received not later than 12 months before the compliance date. The request must contain the following information:

(i) A description of pollution prevention or waste minimization controls that, when installed, will significantly reduce the amount and/or toxicity of hazardous wastes entering the feedstream(s) of the hazardous waste combustor(s). Pollution prevention or waste minimization measures may include: equipment or technology modifications, reformulation or redesign of products, substitution of raw materials, improvements in work practices, maintenance, training, inventory control, or recycling practices conducted as defined in § 261.1(c) of this chapter;

(ii) A description of other pollution controls to be installed that are necessary to comply with the emission standards and operating requirements;

(iii) A reduction goal or estimate of the annual reductions in quantity and/or toxicity of hazardous waste(s) entering combustion feedstream(s) that you will achieve by installing the proposed pollution prevention or waste minimization measures;

(iv) A comparison of reductions in the amounts and/or toxicity of hazardous wastes combusted after installation of pollution prevention or waste minimization measures to the amounts and/or toxicity of hazardous wastes combusted prior to the installation of these measures. If the difference is less than a fifteen percent reduction, include a comparison to pollution prevention and waste minimization reductions recorded during the previous five years;

(v) Reasonable documentation that installation of the pollution prevention or waste minimization changes will not result in a net increase (except for documented increases in production) of hazardous constituents released to the environment through other emissions, wastes or effluents;

(vi) Reasonable documentation that the design and installation of waste minimization and other measures that are necessary for compliance with the emission standards and operating requirements of this subpart cannot otherwise be installed within the three year compliance period, and

(vii) The information required in § 63.6(i)(6)(i)(B) through (D).

(2) You may enclose documentation prepared under an existing State-required pollution prevention program that contains the information prescribed in paragraph (b) of this section with a request for extension in lieu of complying with the time extension requirements of that paragraph.

(c) *Approval of request for extension of compliance date.* Based on the information provided in any request made under paragraph (a) of this section, the Administrator or State with an approved title V program may grant an extension of the compliance date of this subpart. The extension will be in writing in accordance with §§ 63.6(i)(10)(i) through 63.6(i)(10)(v)(A).

(ii) If you intend to comply with the emission standards of this subpart, but can do so without undertaking any of the activities described in paragraph (b)(1) of this section, you must submit documentation either:

(A) Demonstrating that you, at the time of the progress report, are in compliance with the emission standards and operating requirements; or

(B) Specifying the steps that you will take to comply, without undertaking any of the activities listed in paragraphs (b)(1)(i) through (b)(1)(iii) of this section.

(iii) If you do not comply with paragraph (b)(1) or (b)(2)(ii) of this section, you must stop burning hazardous waste on or before October 1, 2001.

(3) *Schedule.* (i) You must include in the progress report a detailed schedule that lists key dates for all projects that will bring the source into compliance with the emission standards and operating requirements of this subpart (i.e., key dates for the activities required under paragraphs (b)(1)(i) through (iii) of this section). Dates must cover the time frame from the progress report through the compliance date of the emission standards and operating requirements of this subpart.

(ii) The schedule must contain the following dates:

(A) Bid and award dates for construction contracts and equipment supply contractors;

(B) Milestones such as ground breaking, completion of drawings and specifications, equipment deliveries, intermediate construction completions, and testing;

(C) The dates on which applications were submitted for or obtained operating and construction permits or licenses;

(D) The dates by which approvals of any permits or licenses are anticipated; and

(E) The projected date by which you will comply with the emission standards and operating requirements of this subpart.

(4) *Notice of intent to comply.* You must include a statement in the progress report that you intend or do not intend to comply with the emission standards and operating requirements of this subpart.

(5) *Sources that do not intend to comply.* (i) If you indicated in your NIC your intent not to comply with the emission standards and operating requirements of this subpart and stop burning hazardous waste prior to submitting a progress report, or if you meet the requirements of § 63.1206(a)(2), you are exempt from the requirements of paragraphs (b)(2) and (b)(3) of this section. However, you must include in your progress report the date on which you stopped burning hazardous waste and the date(s) you submitted RCRA closure documents.

(ii) If you signify in the progress report, submitted not later than October 1, 2001, your intention not to comply with the emission standards and operating requirements of this subpart, you must stop burning hazardous waste on or before October 1, 2001.

(c) *Summary of recordkeeping requirements.* You must retain the following in the operating record:

Reference	Document, data, or information
63.1201(a), 63.10(b) and (c)	General. Information required to document and maintain compliance with the regulations of Subpart EEE, including data recorded by continuous monitoring systems (CMS), and copies of all notifications, reports, plans, and other documents submitted to the Administrator.
63.1211(d)	Documentation of compliance.
63.1206(c)(3)(vii)	Documentation and results of the automatic waste feed cutoff operability testing.
63.1209(c)(2)	Feedstream analysis plan.
63.1204(d)(3)	Documentation of compliance with the emission averaging requirements for cement kilns with in-line raw mills.
63.1204(e)(3)	Documentation of compliance with the emission averaging requirements for preheater or preheater/precalciner kilns with dual stacks.
63.1206(b)(1)(ii)(B)	If you elect to comply with all applicable requirements and standards promulgated under authority of the Clean Air Act, including Sections 112 and 129, in lieu of the requirements of Subpart EEE when not burning hazardous waste, you must document in the operating record that you are in compliance with those requirements.
63.1206(c)(2)	Startup, shutdown, and malfunction plan.
63.1206(c)(3)(v)	Corrective measures for any automatic waste feed cutoff that results in an exceedance of an emission standard or operating parameter limit.
63.1206(c)(4)(ii)	Emergency safety vent operating plan.
63.1206(c)(4)(iii)	Corrective measures for any emergency safety vent opening.
63.1206(c)(6)	Operator training and certification program.
63.1206(c)(7)	Ramp down procedures for waste feed cutoffs.
63.1209(k)(6)(iii), 63.1209(k)(7)(ii), 63.1209(k)(9)(ii), 63.1209(o)(4)(iii).	Documentation that a substitute activated carbon, dioxin/furan formation reaction inhibitor, or dry scrubber sorbent will provide the same level of control as the original material.

(d) *Documentation of compliance.* (1) By the compliance date, you must develop and include in the operating record a Documentation of Compliance.

(2) The Documentation of Compliance must identify the applicable emission standards under this subpart and the limits on the operating parameters under § 63.1209 that will ensure compliance with those emission standards.

(3) You must include a signed and dated certification in the Documentation of Compliance that:

(i) Required CEMs and CMS are installed, calibrated, and continuously operating in compliance with the requirements of this subpart; and

(ii) Based on an engineering evaluation prepared under your direction or supervision in accordance with a system designed to ensure that qualified personnel properly gathered and evaluated the information and supporting documentation, and considering at a minimum the design, operation, and maintenance characteristics of the combustor and emissions control equipment, the types, quantities, and characteristics of feedstreams, and available emissions data:

(A) You are in compliance with the emission standards of this subpart; and

(B) The limits on the operating parameters under § 63.1209 ensure compliance with the emission standards of this subpart.

(4) You must comply with the emission standards and operating parameter limits specified in the Documentation of Compliance.

your intention to comply with the emission standards of this subpart.

(iii) A summary of the public meeting required under paragraph (c) of this section.

(iv) If you do not intent to comply, but will not stop burning hazardous waste by October 1, 2001 a certification that:

(A) You will stop burning hazardous waste on or before September 30, 2002; and

(B) It is necessary to combust the hazardous waste from another on-site source, during the year prior to September 30, 2002 because that other source is:

(*1*) Installing equipment to come into compliance with the emission standards of this subpart; or

(*2*) Installing source reduction modifications to eliminate the need for further combustion of wastes.

(2) You must make a draft of the NIC available for public review no later than 30 days prior to the public meeting required under paragraph (c)(1) of this section.

(3) You must submit the final NIC to the Administrator no later than October 2, 2000.

(c) *NIC public meeting and notice.* (1) Prior to the submission of the NIC to the permitting agency, and no later than July 31, 2000, you must hold at least one informal meeting with the public to discuss anticipated activities described in the draft NIC for achieving compliance with the emission standards of this subpart. You must post a sign-in sheet or otherwise provide a voluntary opportunity for attendees to provide their names and addresses.

(2) You must submit a summary of the meeting, along with the list of attendees and their addresses developed under paragraph (b)(1) of this section, and copies of any written comments or materials submitted at the meeting, to the Administrator as part of the final NIC, in accordance with paragraph (b)(1)(iii) of this section.

(3) You must provide public notice of the NIC meeting at least 30 days prior to the meeting. You must provide public notice in all of the following forms:

(i) *Newspaper advertisement.* You must publish a notice in a newspaper of general circulation in the county or equivalent jurisdiction of your facility. In addition, you must publish the notice in newspapers of general circulation in adjacent counties or equivalent jurisdiction where such publication would be necessary to inform the affected public. You must publish the notice as a display advertisement.

(ii) *Visible and accessible sign.* You must post a notice on a clearly marked sign at or near the source. If you place the sign on the site of the hazardous waste combustor, the sign must be large enough to be readable from the nearest spot where the public would pass by the site.

(iii) *Broadcast media announcement.* You must broadcast a notice at least once on at least one local radio station or television station.

(iv) *Notice to the facility mailing list.* You must provide a copy of the notice to the facility mailing list in accordance with § 124.10(c)(1)(ix) of this chapter.

(4) You must include the following in the notices required under paragraph (c)(3) of this section:

(i) The date, time, and location of the meeting;

(ii) A brief description of the purpose of the meeting;

(iii) A brief description of the source and proposed operations, including the address or a map (e.g., a sketched or copied street map) of the source location;

(iv) A statement encouraging people to contact the source at least 72 hours before the meeting if they need special access to participate in the meeting;

(v) A statement describing how the draft NIC can be obtained; and

(vi) The name, address, and telephone number of a contact person for the NIC.

(d) *Notification of compliance.* (1) The Notification of Compliance status requirements of § 63.9(h) apply, except that:

(i) The notification is a Notification of Compliance, rather than compliance status;

(ii) The notification is required for the initial comprehensive performance test and each subsequent comprehensive and confirmatory performance test; and

(iii) You must postmark the notification before the close of business on the 90th day following completion of relevant compliance demonstration activity specified in this subpart rather than the 60th day as required by § 63.9(h)(2)(ii).

(2) Upon postmark of the Notification of Compliance, the operating parameter limits identified in the Notification of Compliance, as applicable, shall be complied with, the limits identified in the Documentation of Compliance or a previous Notification of Compliance are no longer applicable.

(3) The Notification of Compliance requirements of § 63.1207(j) also apply.

§ 63.1211 What are the recordkeeping and reporting requirements?

(a) *Summary of reporting requirements.* You must submit the following reports to the Administrator:

Reference	Report
63.1211(b)	Compliance progress report associated and submitted with the notification of intent to comply.
63.10(d)(4)	Compliance progress reports, if required as a condition of an extension of the compliance date granted under § 63.6(i).
63.1206(c)(3)(vi)	Excessive exceedances reports.
63.1206(c)(4)(iv)	Emergency safety vent opening reports.
63.10(d)(5)(i)	Periodic startup, shutdown, and malfunction reports.
63.10(d)(5)(ii)	Immediate startup, shutdown, and malfunction reports.
63.10(e)(3)	Excessive emissions and continuous monitoring system performance report and summary report.

(b) *Compliance progress reports associated with the notification of intent to comply.* (1) General. Not later than October 1, 2001, you must comply with the following, unless you comply with paragraph (b)(2)(ii) of this section:

(i) Complete engineering design for any physical modifications to the source needed to comply with the emission standards of this subpart;

(ii) Submit applicable construction applications to the Administrator; and

(iii) Enter into a binding contractual commitment to purchase, fabricate, and install any equipment, devices, and ancillary structures needed to comply with the emission standards of this subpart.

(2) *Demonstration.* (i) You must submit to the Administrator a progress report on or before October 1, 2001 which contains information demonstrating that you have met the requirements of paragraph (b)(1) of this section. This information will be used by the Administrator to determine if you have made adequate progress towards compliance with the emission standards of this subpart.

Reference	Notification, request, petition, or application
63.1206(b)(5), 63.1213, 63.6(i), 63.9(c)	You may request an extension of the compliance date for up to one year.
63.9(i)	You may request an adjustment to time periods or postmark deadlines for submittal and review of required information.
63.1209(g)(1)	You may request approval of: (1) alternative monitoring methods, except for standards that you must monitor with a continuous emission monitoring system (CEMS) and except for requests to use a CEMS in lieu of operating parameter limits; or (2) a waiver of an operating parameter limit.
63.1209(a)(5), 63.8(f)	You may request: (1) approval of alternative monitoring methods for compliance with standards that are monitored with a CEMS; and (2) approval to use a CEMS in lieu of operating parameter limits.
63.1204(d)(4)	Notification that you elect to comply with the emission averaging requirements for cement kilns with in-line raw mills.
63.1204(e)(4)	Notification that you elect to comply with the emission averaging requirements for preheater or preheater/precalciner kilns with dual stacks.
63.1206(b)(1)(ii)(A)	Notification that you elect to document compliance with all applicable requirements and standards promulgated under authority of the Clean Air Act, including Sections 112 and 129, in lieu of the requirements of Subpart EEE of this Part when not burning hazardous waste.
63.1206(b)(5)(i)(C)(2)	You may request to burn hazardous waste for more than 720 hours and for purposes other than testing or pretesting after a making a change in the design or operation that could affect compliance with emission standards and prior to submitting a revised Notification of Compliance.
63.1206(b)(9)(iii)(B)	If you elect to conduct particulate matter CEMS correlation testing and wish to have federal particulate matter and opacity standards and associated operating limits waived during the testing, you must notify the Administrator by submitting the correlation test plan for review and approval.
63.1206(b)(10)	Owners and operators of lightweight aggregate kilns may request approval of alternative emission standards for mercury, semivolatile metal, low volatile metal, and hydrochloric acid/chlorine gas under certain conditions.
63.1206(b)(11)	Owners and operators of cement kilns may request approval of alternative emission standards for mercury, semivolatile metal, low volatile metal, and hydrochloric acid/chlorine gas under certain conditions.
63.1206(b)(14)	Owners and operators of incinerators may comply with an alternative particulate matter standard of 68 mg/dscm, corrected to 7% oxygen, under a petition documenting de minimis metals levels in feedstreams.
63.1207(c)(2)	You may request to base initial compliance on data in lieu of a comprehensive performance test.
63.1207(d)(3)	You may request more than 60 days to complete a performance test if additional time is needed for reasons beyond your control.
63.1207(i)	You may request up to a one-year time extension for conducting a performance test (other than the initial comprehensive performance test) to consolidate testing with other state or federally-required testing.
63.1207(j)(4)	You may request more than 90 days to submit a Notification of Compliance after completing a performance test if additional time is needed for reasons beyond your control.
63.1207(l)(3)	After failure of a performance test, you may request to burn hazardous waste for more than 720 hours and for purposes other than testing or pretesting.
63.1209(l)(1)	You may request to extrapolate mercury feedrate limits.
63.1209(n)(2)(ii)	You may request to extrapolate semivolatile and low volatile metal feedrate limits.
63.10(e)(3)(ii)	You may request to reduce the frequency of excess emissions and CMS performance reports.
63.10(f)	You may request to waive recordkeeping or reporting requirements.
63.1211(e)	You may request to use data compression techniques to record data on a less frequent basis than required by § 63.1209.

(b) *Notification of intent to comply (NIC).* (1) You must prepare a Notification of Intent to Comply that includes the following information:

(i) General information:

(A) The name and address of the owner/operator and the source;

(B) Whether the source is a major or an area source;

(C) Waste minimization and emission control technique(s) being considered;

(D) Emission monitoring technique(s) you are considering;

(E) Waste minimization and emission control technique(s) effectiveness;

(F) A description of the evaluation criteria used or to be used to select waste minimization and/or emission control technique(s); and

(G) A statement that you intend to comply with the emission standards of this subpart.

(ii) Information on key activities and estimated dates for these activities that will bring the source into compliance with emission control requirements of this subpart. The submission of key activities and dates is not intended to be static and you may revise them during the period the NIC is in effect. You must submit revisions to the Administrator and make them available to the public. You must include the following key activities and dates:

(A) The dates for beginning and completion of engineering studies to evaluate emission control systems or process changes for emissions;

(B) The date by which you will award contracts for emission control systems or process changes for emission control, or the date by which you will issue orders for the purchase of component parts to accomplish emission control or process changes;

(C) The date by which you will submit construction applications;

(D) The date by which you will initiate on-site construction, installation of emission control equipment, or process change;

(E) The date by which you will complete on-site construction, installation of emission control equipment, or process change; and

(F) The date by which you will achieve final compliance. The individual dates and milestones listed in paragraphs (b)(1)(ii)(A) through (F) of this section as part of the NIC are not requirements and therefore are not enforceable deadlines; the requirements of paragraphs (b)(1)(ii)(A) through (F) of this section must be included as part of the NIC only to inform the public of

maximum production rate, or another parameter that you document in the site-specific test plan as an appropriate surrogate for gas residence time, as the average of the maximum hourly rolling averages for each run.

(ii) You must comply with this limit on a hourly rolling average basis.

(o) *Hydrochloric acid and chlorine gas.* You must comply with the hydrogen chloride and chlorine gas emission standard by establishing and complying with the following operating parameter limits. You must base the limits on operations during the comprehensive performance test, unless the limits are based on manufacturer specifications.

(1) *Feedrate of total chlorine and chloride.* You must establish a 12-hour rolling average limit for the total feedrate of chlorine (organic and inorganic) in all feedstreams as the average of the average hourly rolling averages for each run.

(2) *Maximum flue gas flowrate or production rate.* (i) As an indicator of gas residence time in the control device, you must establish a limit on the maximum flue gas flowrate, the maximum production rate, or another parameter that you document in the site-specific test plan as an appropriate surrogate for gas residence time, as the average of the maximum hourly rolling averages for each run.

(ii) You must comply with this limit on a hourly rolling average basis;

(3) *Wet scrubber.* If your combustor is equipped with a wet scrubber:

(i) If your source is equipped with a high energy wet scrubber such as a venturi, hydrosonic, collision, or free jet wet scrubber, you must establish a limit on minimum pressure drop across the wet scrubber on an hourly rolling average as the average of the test run averages;

(ii) If your source is equipped with a low energy wet scrubber such as a spray tower, packed bed, or tray tower, you must establish a minimum pressure drop across the wet scrubber based on manufacturer's specifications. You must comply with the limit on an hourly rolling average;

(iii) If your source is equipped with a low energy wet scrubber, you must establish a limit on minimum liquid feed pressure to the wet scrubber based on manufacturer's specifications. You must comply with the limit on an hourly rolling average;

(iv) You must establish a limit on minimum pH on an hourly rolling average as the average of the test run averages;

(v) You must establish limits on either the minimum liquid to gas ratio or the minimum scrubber water flowrate and maximum flue gas flowrate on an hourly rolling average as the average of the test run averages. If you establish limits on maximum flue gas flowrate under this paragraph, you need not establish a limit on maximum flue gas flowrate under paragraph (o)(2) of this section; and

(vi) You must establish a limit on minimum power input for ionizing wet scrubbers on an hourly rolling average as the average of the test run averages.

(4) *Dry scrubber.* If your combustor is equipped with a dry scrubber, you must establish the following operating parameter limits:

(i) *Minimum sorbent feedrate.* You must establish a limit on minimum sorbent feedrate on an hourly rolling average as the average of the test run averages.

(ii) *Minimum carrier fluid flowrate or nozzle pressure drop.* You must establish a limit on minimum carrier fluid (gas or liquid) flowrate or nozzle pressure drop based on manufacturer's specifications.

(iii) *Sorbent specifications.* (A) You must specify and use the brand (*i.e.*, manufacturer) and type of sorbent used during the comprehensive performance test until a subsequent comprehensive performance test is conducted, unless you document in the site-specific performance test plan required under §§ 63.1207(e) and (f) key parameters that affect adsorption and establish limits on those parameters based on the sorbent used in the performance test.

(B) You may substitute at any time a different brand or type of sorbent provided that the replacement has equivalent or improved properties compared to the sorbent used in the performance test and conforms to the key sorbent parameters you identify under paragraph (o)(4)(iii)(A) of this section. You must record in the operating record documentation that the substitute sorbent will provide the same level of control as the original sorbent.

(p) *Maximum combustion chamber pressure.* If you comply with the requirements for combustion system leaks under § 63.1206(c)(5) by maintaining the maximum combustion chamber zone pressure lower than ambient pressure, you must monitor the pressure instantaneously and the automatic waste feed cutoff system must be engaged when negative pressure is not maintained at any time.

(q) *Operating under different modes of operation.* If you operate under different modes of operation, you must establish operating parameter limits for each mode. You must document in the operating record when you change a mode of operation and begin complying with the operating parameter limits for an alternative mode of operation. You must begin calculating rolling averages anew (*i.e.*, without considering previous recordings) when you begin complying with the operating parameter limits for the alternative mode of operation.

Notification, Reporting and Recordkeeping

§ 63.1210 What are the notification requirements?

(a) *Summary of requirements.* (1) You must submit the following notifications to the Administrator:

Reference	Notification
63.9(b)	Initial notifications that you are subject to Subpart EEE of this Part.
63.1210(b) and (c)	Notification of intent to comply.
63.9(d)	Notification that you are subject to special compliance requirements.
63.1207(e), 63.9(e) 63.9(g)(1) and (3)	Notification of performance test and continuous monitoring system evaluation, including the performance test plan and CMS performance evaluation plan.[1]
63.1210(d), 63.1207(j), 63.9(h), 63.10(d)(2), 63.10(e)(2).	Notification of compliance, including results of performance tests and continuous monitoring system performance evaluations.
63.1206(b)(6)	Notification of changes in design, operation, or maintenance.
63.9(j)	Notification and documentation of any change in information already provided under § 63.9.

[1] You may also be required on a case-by-case basis to submit a feedstream analysis plan under § 63.1209(c)(3).

(2) You must submit the following notifications to the Administrator if you request or elect to comply with alternative requirements:

(A) During each comprehensive performance test conducted to demonstrate compliance with the particulate matter emissions standard, you must establish a range of operating values for the control device that is a representative and reliable indicator that the control device is operating within the same range of conditions as during the performance test. You must establish this range of operating values as follows:

(*1*) You must select a set of operating parameters appropriate for the control device design that you determine to be a representative and reliable indicator of the control device performance.

(*2*) You must measure and record values for each of the selected operating parameters during each test run of the performance test. A value for each selected parameter must be recorded using a continuous monitor.

(*3*) For each selected operating parameter measured in accordance with the requirements of paragraph (m)(1)(iv)(A)(*1*) of this section, you must establish a minimum operating parameter limit or a maximum operating parameter limit, as appropriate for the parameter, to define the operating limits within which the control device can operate and still continuously achieve the same operating conditions as during the performance test.

(*4*) You must prepare written documentation to support the operating parameter limits established for the control device and you must include this documentation in the performance test plan that you submit for review and approval. This documentation must include a description for each selected parameter and the operating range and monitoring frequency required to ensure the control device is being properly operated and maintained.

(B) You must install, calibrate, operate, and maintain a monitoring device equipped with a recorder to measure the values for each operating parameter selected in accordance with the requirements of paragraph (m)(1)(iv)(A)(*1*) of this section. You must install, calibrate, and maintain the monitoring equipment in accordance with the equipment manufacturer's specifications. The recorder must record the detector responses at least every 60 seconds, as required in the definition of continuous monitor.

(C) You must regularly inspect the data recorded by the operating parameter monitoring system at a sufficient frequency to ensure the control device is operating properly. An excursion is determined to have occurred any time that the actual value of a selected operating parameter is less than the minimum operating limit (or, if applicable, greater than the maximum operating limit) established for the parameter in accordance with the requirements of paragraph (m)(1)(iv)(A)(3) of this section.

(D) Operating parameters selected in accordance with paragraph (m)(1)(iv) of this section may be based on manufacturer specifications provided you support the use of manufacturer specifications in the performance test plan that you submit for review and approval.

(2) *Maximum flue gas flowrate or production rate.* (i) As an indicator of gas residence time in the control device, you must establish a limit on the maximum flue gas flowrate, the maximum production rate, or another parameter that you document in the site-specific test plan as an appropriate surrogate for gas residence time, as the average of the maximum hourly rolling averages for each run.

(ii) You must comply with this limit on a hourly rolling average basis;

(3) *Maximum ash feedrate.* Owners and operators of hazardous waste incinerators must establish a maximum ash feedrate limit as the average of the highest hourly rolling averages for each run.

(n) *Semivolatile metals and low volatility metals.* You must comply with the semivolatile metal (cadmium and lead) and low volatile metal (arsenic, beryllium, and chromium) emission standards by establishing and complying with the following operating parameter limits. You must base the limits on operations during the comprehensive performance test, unless the limits are based on manufacturer specifications.

(1) *Maximum inlet temperature to dry particulate matter air pollution control device.* You must establish a limit on the maximum inlet temperature to the primary dry metals emissions control device (*e.g.*, electrostatic precipitator, baghouse) on an hourly rolling average basis as the average of the test run averages.

(2) *Maximum feedrate of semivolatile and low volatile metals.* (i) *General.* You must establish feedrate limits for semivolatile metals (cadmium and lead) and low volatile metals (arsenic, beryllium, and chromium) as follows, except as provided by paragraph (n)(2)(ii) of this section:

(A) You must establish a 12-hour rolling average limit for the feedrate of cadmium and lead, combined, in all feedstreams as the average of the average hourly rolling averages for each run;

(B) You must establish a 12-hour rolling average limit for the feedrate of arsenic, beryllium, and chromium, combined, in all feedstreams as the average of the average hourly rolling averages for each run; and

(C) You must establish a 12-hour rolling average limit for the feedrate of arsenic, beryllium, and chromium, combined, in all pumpable feedstreams as the average of the average hourly rolling averages for each run. Dual feedrate limits for both pumpable and total feedstreams are not required, however, if you base the total feedrate limit solely on the feedrate of pumpable feedstreams.

(ii) *Feedrate extrapolation.* (A) You may request as part of the performance test plan under §§ 63.7(b) and (c) and §§ 63.1207(e) and (f) to use the semivolatile metal and low volatile metal feedrates and associated emission rates during the comprehensive performance test to extrapolate to higher allowable feedrate limits and emission rates.

(B) The extrapolation methodology will be reviewed and approved, as warranted, by the Administrator. The review will consider in particular whether:

(*1*) Performance test metal feedrates are appropriate (*i.e.*, whether feedrates are at least at normal levels; depending on the heterogeneity of the waste, whether some level of spiking would be appropriate; and whether the physical form and species of spiked material is appropriate); and

(*2*) Whether the extrapolated feedrates you request are warranted considering historical metal feedrate data.

(C) The Administrator will review the performance test results in making a finding of compliance required by §§ 63.6(f)(3) and 63.1206(b)(3) to ensure that you have interpreted emission test results properly and that the extrapolation procedure is appropriate for your source.

(3) *Control device operating parameter limits (OPLs).* You must establish operating parameter limits on the particulate matter control device as specified by paragraph (m)(1) of this section:

(4) *Maximum total chlorine and chloride feedrate.* You must establish a 12-hour rolling average limit for the feedrate of total chlorine and chloride in all feedstreams as the average of the average hourly rolling averages for each run.

(5) *Maximum flue gas flowrate or production rate.* (i) As an indicator of gas residence time in the control device, you must establish a limit on the maximum flue gas flowrate, the

(iii) The Administrator will review the performance test results in making a finding of compliance required by §§ 63.6(f)(3) and 63.1206(b)(3) to ensure that you have interpreted emission test results properly and that the extrapolation procedure is appropriate for your source.

(2) *Wet scrubber.* If your combustor is equipped with a wet scrubber, you must establish operating parameter limits prescribed by paragraph (o)(3) of this section.

(3) *Activated carbon injection.* If your combustor is equipped with an activated carbon injection system, you must establish operating parameter limits prescribed by paragraph (k)(7) of this section.

(4) *Activated carbon bed.* If your combustor is equipped with a carbon bed system, you must establish operating parameter limits prescribed by paragraph (k)(8) of this section.

(m) *Particulate matter.* You must comply with the particulate matter emission standard by establishing and complying with the following operating parameter limits. You must base the limits on operations during the comprehensive performance test, unless the limits are based on manufacturer specifications.

(1) *Control device operating parameter limits (OPLs).* (i) *Wet scrubbers.* For sources equipped with wet scrubbers, including ionizing wet scrubbers, high energy wet scrubbers such as venturi, hydrosonic, collision, or free jet wet scrubbers, and low energy wet scrubbers such as spray towers, packed beds, or tray towers, you must establish limits on the following parameters:

(A) For high energy scrubbers only, minimum pressure drop across the wet scrubber on an hourly rolling average, established as the average of the test run averages;

(B) For all wet scrubbers:

(*1*) To ensure that the solids content of the scrubber liquid does not exceed levels during the performance test, you must either:

(i) Establish a limit on solids content of the scrubber liquid using a CMS or by manual sampling and analysis. If you elect to monitor solids content manually, you must sample and analyze the scrubber liquid hourly unless you support an alternative monitoring frequency in the performance test plan that you submit for review and approval; or

(ii) Establish a minimum blowdown rate using a CMS and either a minimum scrubber tank volume or liquid level using a CMS.

(*2*) For maximum solids content monitored with a CMS, you must establish a limit on a twelve-hour rolling average as the average of the test run averages.

(*3*) For maximum solids content measured manually, you must establish an hourly limit, as measured at least once per hour, unless you support an alternative monitoring frequency in the performance test plan that you submit for review and approval. You must establish the maximum hourly limit as the average of the manual measurement averages for each run.

(*4*) For minimum blowdown rate and either a minimum scrubber tank volume or liquid level using a CMS, you must establish a limit on an hourly rolling average as the average of the test run averages.

(C) For high energy wet scrubbers only, you must establish limits on either the minimum liquid to gas ratio or the minimum scrubber water flowrate and maximum flue gas flowrate on an hourly rolling average. If you establish limits on maximum flue gas flowrate under this paragraph, you need not establish a limit on maximum flue gas flowrate under paragraph (m)(2) of this section. You must establish these hourly rolling average limits as the average of the test run averages; and

(D) You must establish limits on minimum power input for ionizing wet scrubbers on an hourly rolling average as the average of the test run averages.

(ii) *Baghouses.* If your combustor is equipped with a baghouse, you must establish a limit on minimum pressure drop and maximum pressure drop across each baghouse cell based on manufacturer's specifications. You must comply with the limit on an hourly rolling average.

(iii) *Electrostatic precipitators.* If your combustor is equipped with an electrostatic precipitator, you must establish a limit on minimum secondary power input (kVa) for each field on an hourly rolling average as the average of the test run averages. Secondary power is power actually fed to the electrostatic precipitator rather than primary power fed to the transformer-rectifier sets.

(iv) *Other particulate matter control devices.* For each control device that is not a high energy or ionizing wet scrubber, baghouse, or electrostatic precipitator but is operated to comply with the particulate matter emission standards of this subpart, you must ensure that the control device is properly operated and maintained as required by § 63.1206(c)(7) and by monitoring the operation of the control device as follows:

any waste heat recovery system) on an hourly rolling average. The limit must be established as the average of the test run averages;

(2) *Minimum combustion chamber temperature.* (i) You must measure the temperature of each combustion chamber at a location that best represents, as practicable, the bulk gas temperature in the combustion zone. You must document the temperature measurement location in the test plan you submit under §§ 63.1207(e) and (f);

(ii) You must establish a minimum hourly rolling average limit as the average of the test run averages.

(3) *Maximum flue gas flowrate or production rate.* (i) As an indicator of gas residence time in the control device, you must establish and comply with a limit on the maximum flue gas flowrate, the maximum production rate, or another parameter that you document in the site-specific test plan as an appropriate surrogate for gas residence time, as the average of the maximum hourly rolling averages for each run.

(ii) You must comply with this limit on a hourly rolling average basis;

(4) *Maximum waste feedrate.* (i) You must establish limits on the maximum pumpable and total (pumpable and nonpumpable) waste feedrate for each location where waste is fed.

(ii) You must establish the limits as the average of the maximum hourly rolling averages for each run.

(iii) You must comply with the feedrate limit(s) on a hourly rolling average basis;

(5) *Particulate matter operating limit.* If your combustor is equipped with an activated carbon injection or a carbon bed system, you must limit particulate matter emissions to the level achieved during the comprehensive performance test as prescribed by paragraph (m) of this section;

(6) *Activated carbon injection parameter limits.* If your combustor is equipped with an activated carbon injection system:

(i) *Carbon feedrate.* You must establish a limit on minimum carbon injection rate on an hourly rolling average calculated as the average of the test run averages. If your carbon injection system injects carbon at more than one location, you must establish a carbon feedrate limit for each location.

(ii) *Carrier fluid.* You must establish a limit on minimum carrier fluid (gas or liquid) flowrate or pressure drop as an hourly rolling average based on the manufacturer's specifications. You must document the specifications in the test plan you submit under §§ 63.1207(e) and (f);

(iii) *Carbon specification.* (A) You must specify and use the brand (*i.e.*, manufacturer) and type of carbon used during the comprehensive performance test until a subsequent comprehensive performance test is conducted, unless you document in the site-specific performance test plan required under §§ 63.1207(e) and (f) key parameters that affect adsorption and establish limits on those parameters based on the carbon used in the performance test.

(B) You may substitute at any time a different brand or type of carbon provided that the replacement has equivalent or improved properties compared to the carbon used in the performance test and conforms to the key sorbent parameters you identify under paragraph (k)(6)(iii)(A) of this section. You must include in the operating record documentation that the substitute carbon will provide the same level of control as the original carbon.

(7) *Carbon bed parameter limits.* If your combustor is equipped with a carbon bed system:

(i) *Maximum bed age.* (A) Except as provided by paragraph (k)(7)(i)(C) of this section, the maximum age of the carbon in each segment of the bed before you must replace the carbon is the age of the bed during the comprehensive performance test.

(B) You must measure carbon age in terms of the cumulative volume of combustion gas flow through carbon since its addition. For beds with multiple segments, you must establish the maximum age for each segment.

(C) For the initial comprehensive performance test, you may base the initial limit on maximum age of the carbon in each segment of the bed on manufacturer's specifications. If you use manufacturer's specifications rather than actual bed age to establish the initial limit, you must also recommend in the initial comprehensive performance test plan a schedule for subsequent dioxin/furan emissions testing, prior to the confirmatory performance test, that you will use to document to the Administrator that the initial limit on maximum bed age ensures compliance with the dioxin/furan emission standard. If you fail to confirm compliance with the emission standard during this testing, you must conduct additional testing as necessary to document that a revised lower limit on maximum bed age ensures compliance with the standard.

(ii) *Carbon specification.* (A) You must specify and use the brand (*i.e.*, manufacturer) and type of carbon used during the comprehensive performance test until a subsequent comprehensive performance test is conducted, unless you document in the site-specific performance test plan required under §§ 63.1207(e) and (f) key parameters that affect adsorption and establish limits on those parameters based on the carbon used in the performance test.

(B) You may substitute at any time a different brand or type of carbon provided that the replacement has equivalent or improved properties compared to the carbon used in the performance test. You must include in the operating record documentation that the substitute carbon will provide an equivalent or improved level of control as the original carbon.

(iii) *Maximum temperature.* You must measure the temperature of the carbon bed at either the bed inlet or exit and you must establish a maximum temperature limit on an hourly rolling average as the average of the test run averages.

(8) *Catalytic oxidizer parameter limits.* If your combustor is equipped with a catalytic oxidizer, you must establish limits on the following parameters:

(i) *Minimum flue gas temperature at the entrance of the catalyst.* You must establish a limit on minimum flue gas temperature at the entrance of the catalyst on an hourly rolling average as the average of the test run averages.

(ii) *Maximum time in-use.* You must replace a catalytic oxidizer with a new catalytic oxidizer when it has reached the maximum service time specified by the manufacturer.

(iii) *Catalyst replacement specifications.* When you replace a catalyst with a new one, the new catalyst must be equivalent to or better than the one used during the previous comprehensive test, as measured by:

(A) Catalytic metal loading for each metal;

(B) Space time, expressed in the units s^{-1}, the maximum rated volumetric flow of combustion gas through the catalyst divided by the volume of the catalyst; and

(C) Substrate construction, including materials of construction, washcoat type, and pore density.

(iv) *Maximum flue gas temperature.* You must establish a maximum flue gas temperature limit at the entrance of the catalyst as an hourly rolling average, based on manufacturer's specifications.

(9) *Inhibitor feedrate parameter limits.* If you feed a dioxin/furan inhibitor into the combustion system, you must establish limits for the following parameters:

(i) *Minimum inhibitor feedrate.* You must establish a limit on minimum inhibitor feedrate on an hourly rolling

(A) *Timing of the application.* You must submit the application to the Administrator not later than with the comprehensive performance test plan.

(B) *Content of the application.* You must include in the application:

(1) Data or information justifying your request for an alternative monitoring requirement (or for a waiver of an operating parameter limit), such as the technical or economic infeasibility or the impracticality of using the required approach;

(2) A description of the proposed alternative monitoring requirement, including the operating parameter to be monitored, the monitoring approach/technique (*e.g.*, type of detector, monitoring location), the averaging period for the limit, and how the limit is to be calculated; and

(3) Data or information documenting that the alternative monitoring requirement would provide equivalent or better assurance of compliance with the relevant emission standard, or that it is the monitoring requirement that best assures compliance with the standard and that is technically and economically practicable.

(C) *Approval of request to use an alternative monitoring requirement or waive an operating parameter limit.* The Administrator will notify you of approval or intention to deny approval of the request within 90 calendar days after receipt of the original request and within 60 calendar days after receipt of any supplementary information that you submit. The Administrator will not approve an alternative monitoring request unless the alternative monitoring requirement provides equivalent or better assurance of compliance with the relevant emission standard, or is the monitoring requirement that best assures compliance with the standard and that is technically and economically practicable. Before disapproving any request, the Administrator will notify you of the Administrator's intention to disapprove the request together with:

(1) Notice of the information and findings on which the intended disapproval is based; and

(2) Notice of opportunity for you to present additional information to the Administrator before final action on the request. At the time the Administrator notifies you of intention to disapprove the request, the Administrator will specify how much time you will have after being notified of the intended disapproval to submit the additional information.

(D) *Responsibility of owners and operators.* You are responsible for ensuring that you submit any supplementary and additional information supporting your application in a timely manner to enable the Administrator to consider your application during review of the comprehensive performance test plan. Neither your submittal of an application, nor the Administrator's failure to approve or disapprove the application, relieves you of the responsibility to comply with the provisions of this subpart.

(2) *Administrator's discretion to specify additional or alternative requirements.* The Administrator may determine on a case-by-case basis at any time (e.g., during review of the comprehensive performance test plan, during compliance certification review) that you may need to limit additional or alternative operating parameters (e.g., opacity in addition to or in lieu of operating parameter limits on the particulate matter control device) or that alternative approaches to establish limits on operating parameters may be necessary to document compliance with the emission standards of this subpart.

(h) *Reduction of monitoring data.* The provisions of § 63.8(g) apply.

(i) *When an operating parameter is applicable to multiple standards.* Paragraphs (j) through (p) of this section require you to establish limits on operating parameters based on comprehensive performance testing to ensure you maintain compliance with the emission standards of this subpart. For several parameters, you must establish a limit for the parameter to ensure compliance with more than one emission standard. An example is a limit on minimum combustion chamber temperature to ensure compliance with both the DRE standard of paragraph (j) of this section and the dioxin/furan standard of paragraph (k) of this section. If the performance tests for such standards are not performed simultaneously, the most stringent limit for a parameter derived from independent performance tests applies.

(j) *DRE.* To remain in compliance with the destruction and removal efficiency (DRE) standard, you must establish operating limits during the comprehensive performance test (or during a previous DRE test under provisions of § 63.1206(b)(7)) for the following parameters, unless the limits are based on manufacturer specifications, and comply with those limits at all times that hazardous waste remains in the combustion chamber (*i.e.*, the hazardous waste residence time has not transpired since the hazardous waste feed cutoff system was activated):

(1) *Minimum combustion chamber temperature.* (i) You must measure the temperature of each combustion chamber at a location that best represents, as practicable, the bulk gas temperature in the combustion zone. You must document the temperature measurement location in the test plan you submit under § 63.1207(e);

(ii) You must establish a minimum hourly rolling average limit as the average of the test run averages;

(2) *Maximum flue gas flowrate or production rate.* (i) As an indicator of gas residence time in the control device, you must establish and comply with a limit on the maximum flue gas flowrate, the maximum production rate, or another parameter that you document in the site-specific test plan as an appropriate surrogate for gas residence time, as the average of the maximum hourly rolling averages for each run.

(ii) You must comply with this limit on a hourly rolling average basis;

(3) *Maximum hazardous waste feedrate.* (i) You must establish limits on the maximum pumpable and total (i.e., pumpable and nonpumpable) hazardous waste feedrate for each location where hazardous waste is fed.

(ii) You must establish the limits as the average of the maximum hourly rolling averages for each run.

(iii) You must comply with the feedrate limit(s) on a hourly rolling average basis;

(4) *Operation of waste firing system.* You must specify operating parameters and limits to ensure that good operation of each hazardous waste firing system is maintained.

(k) *Dioxins and furans.* You must comply with the dioxin and furans emission standard by establishing and complying with the following operating parameter limits. You must base the limits on operations during the comprehensive performance test, unless the limits are based on manufacturer specifications.

(1) *Gas temperature at the inlet to a dry particulate matter control device.* (i) For hazardous waste burning incinerators and cement kilns, if the combustor is equipped with an electrostatic precipitator, baghouse (fabric filter), or other dry emissions control device where particulate matter is suspended in contact with combustion gas, you must establish a limit on the maximum temperature of the gas at the inlet to the device on an hourly rolling average. You must establish the hourly rolling average limit as the average of the test run averages.

(ii) For hazardous waste burning lightweight aggregate kilns, you must establish a limit on the maximum temperature of the gas at the exit of the (last) combustion chamber (or exit of

initially. Continuous monitoring systems must begin recording one-minute average values at 12:01 am on the compliance data and begin recording rolling averages when enough one-minute average values are available to calculate the required rolling average (e.g., when 60 one-minute averages are available to calculate an hourly rolling average; when 720 one-minute averages are available to calculate a 12-hour rolling average).

(ii) *Calculation of rolling averages upon intermittent operations*. You must ignore periods of time when one-minute values are not available for calculating rolling averages. When one-minute values become available again, the first one-minute value is added to the previous one-minute values to calculate rolling averages.

(iii) *Calculation of rolling averages when the hazardous waste feed is cutoff*. (A) Except as provided by paragraph (b)(5)(iii)(B) of this section, you must continue to monitoring operating parameter limits with a CMS when the hazardous waste feed is cutoff if the source is operating. You must not resume feeding hazardous waste if an operating parameter exceeds its limit.

(B) You are not subject to the CMS requirements of this subpart during periods of time you meet the requirements of § 63.1206(b)(1)(ii) (compliance with emissions standards for nonhazardous waste burning sources when you are not burning hazardous waste).

(c) *Analysis of feedstreams*.—(1) *General*. Prior to feeding the material, you must obtain an analysis of each feedstream that is sufficient to document compliance with the applicable feedrate limits provided by this section.

(2) *Feedstream analysis plan*. You must develop and implement a feedstream analysis plan and record it in the operating record. The plan must specify at a minimum:

(i) The parameters for which you will analyze each feedstream to ensure compliance with the operating parameter limits of this section;

(ii) Whether you will obtain the analysis by performing sampling and analysis or by other methods, such as using analytical information obtained from others or using other published or documented data or information;

(iii) How you will use the analysis to document compliance with applicable feedrate limits (*e.g.*, if you blend hazardous wastes and obtain analyses of the wastes prior to blending but not of the blended, as-fired, waste, the plan must describe how you will determine the pertinent parameters of the blended waste);

(iv) The test methods which you will use to obtain the analyses;

(v) The sampling method which you will use to obtain a representative sample of each feedstream to be analyzed using sampling methods described in appendix I, part 26, of this chapter, or an equivalent method; and

(vi) The frequency with which you will review or repeat the initial analysis of the feedstream to ensure that the analysis is accurate and up to date.

(3) *Review and approval of analysis plan*. You must submit the feedstream analysis plan to the Administrator for review and approval, if requested.

(4) *Compliance with feedrate limits*. To comply with the applicable feedrate limits of this section, you must monitor and record feedrates as follows:

(i) Determine and record the value of the parameter for each feedstream by sampling and analysis or other method;

(ii) Determine and record the mass or volume flowrate of each feedstream by a CMS. If you determine flowrate of a feedstream by volume, you must determine and record the density of the feedstream by sampling and analysis (unless you report the constituent concentration in units of weight per unit volume (e.g., mg/l)); and

(iii) Calculate and record the mass feedrate of the parameter per unit time.

(5) *Waiver of monitoring of constituents in certain feedstreams*. You are not required to monitor levels of metals or chlorine in the following feedstreams to document compliance with the feedrate limits under this section provided that you document in the comprehensive performance test plan the expected levels of the constituent in the feedstream and account for those assumed feedrate levels in documenting compliance with feedrate limits: natural gas, process air, and feedstreams from vapor recovery systems.

(d) *Performance evaluations*. (1) The requirements of §§ 63.8(d) (Quality control program) and (e) (Performance evaluation of continuous monitoring systems) apply, except that you must conduct performance evaluations of components of the CMS under the frequency and procedures (for example, submittal of performance evaluation test plan for review and approval) applicable to performance tests as provided by § 63.1207.

(2) You must comply with the quality assurance procedures for CEMS prescribed in the appendix to this subpart.

(e) *Conduct of monitoring*. The provisions of § 63.8(b) apply.

(f) *Operation and maintenance of continuous monitoring systems*. The provisions of § 63.8(c) apply except:

(1) *Section 63.8(c)(3)*. The requirements of § 63.1211(d), that requires CMSs to be installed, calibrated, and operational on the compliance date, shall be complied with instead of section 63.8(c)(3);

(2) *Section 63.8(c)(4)(ii)*. The performance specifications for carbon monoxide, hydrocarbon, and oxygen CEMSs in subpart B, part 60 of this chapter that requires detectors to measure the sample concentration at least once every 15 seconds for calculating an average emission rate once every 60 seconds shall be complied with instead of section 63.8(c)(4)(ii); and

(3) Sections 63.8(c)(4)(i), (c)(5), and (c)(7)(i)(C) pertaining to COMS apply only to owners and operators of hazardous waste burning cement kilns..

(g) *Alternative monitoring requirements other than continuous emissions monitoring systems (CEMS)*.—(1) *Requests to use alternative methods*. (i) You may submit an application to the Administrator under this paragraph for approval of alternative monitoring requirements to document compliance with the emission standards of this subpart. For requests to use additional CEMS, however, you must use paragraph (a)(5) of this section and § 63.8(f).

(A) The Administrator will not approve averaging periods for operating parameter limits longer than specified in this section unless you document using data or information that the longer averaging period will ensure that emissions do not exceed levels achieved during the comprehensive performance test over any increment of time equivalent to the time required to conduct three runs of the performance test.

(B) If the Administrator approves the application to use an alternative monitoring requirement, you must continue to use that alternative monitoring requirement until you receive approval under this paragraph to use another monitoring requirement.

(ii) You may submit an application to waive an operating parameter limit specified in this section based on documentation that neither that operating parameter limit nor an alternative operating parameter limit is needed to ensure compliance with the emission standards of this subpart.

(iii) You must comply with the following procedures for applications submitted under paragraphs (g)(1)(i) and (ii) of this section:

average opacity for each six-minute block period during the test; and

(D) To remain in compliance, all six-minute block averages must not exceed the opacity standard under §§ 63.1204(a)(7) and (b)(7).

(2) *Performance specifications.* You must install, calibrate, maintain, and continuously operate the CEMS and COMS in compliance with the quality assurance procedures provided in the appendix to this subpart and Performance Specifications 1 (opacity), 4B (carbon monoxide and oxygen), and 8A (hydrocarbons) in appendix B, part 60 of this chapter.

(3) *Carbon monoxide readings exceeding the span.* (i) Except as provided by paragraph (a)(3)(ii) of this section, if a carbon monoxide CEMS detects a response that results in a one-minute average at or above the 3,000 ppmv span level required by Performance Specification 4B in appendix B, part 60 of this chapter, the one-minute average must be recorded as 10,000 ppmv. The one-minute 10,000 ppmv value must be used for calculating the hourly rolling average carbon monoxide level.

(ii) Carbon monoxide CEMS that use a span value of 10,000 ppmv when one-minute carbon monoxide levels are equal to or exceed 3,000 ppmv are not subject to paragraph (a)(3)(i) of this section. Carbon monoxide CEMS that use a span value of 10,000 are subject to the same CEMS performance and equipment specifications when operating in the range of 3,000 ppmv to 10,000 ppmv that are provided by Performance Specification 4B for other carbon monoxide CEMS, except:

(A) Calibration drift must be less than 300 ppmv; and

(B) Calibration error must be less than 500 ppmv.

(4) *Hydrocarbon readings exceeding the span.* (i) Except as provided by paragraph (a)(4)(ii) of this section, if a hydrocarbon CEMS detects a response that results in a one-minute average at or above the 100 ppmv span level required by Performance Specification 8A in appendix B, part 60 of this chapter, the one-minute average must be recorded as 500 ppmv. The one-minute 500 ppmv value must be used for calculating the hourly rolling average HC level.

(ii) Hydrocarbon CEMS that use a span value of 500 ppmv when one-minute hydrocarbon levels are equal to or exceed 100 ppmv are not subject to paragraph (a)(4)(i) of this section. Hydrocarbon CEMS that use a span value of 500 ppmv are subject to the same CEMS performance and equipment specifications when operating in the range of 100 ppmv to 500 ppmv that are provided by Performance Specification 8A for other hydrocarbon CEMS, except:

(A) The zero and high-level calibration gas must have a hydrocarbon level of between 0 and 100 ppmv, and between 250 and 450 ppmv, respectively;

(B) The strip chart recorder, computer, or digital recorder must be capable of recording all readings within the CEM measurement range and must have a resolution of 2.5 ppmv;

(C) The CEMS calibration must not differ by more than ±15 ppmv after each 24-hour period of the seven day test at both zero and high levels;

(D) The calibration error must be no greater than 25 ppmv; and

(E) The zero level, mid-level, and high level calibration gas used to determine calibration error must have a hydrocarbon level of 0–200 ppmv, 150–200 ppmv, and 350–400 ppmv, respectively.

(5) *Petitions to use CEMS for other standards.* You may petition the Administrator to use CEMS for compliance monitoring for particulate matter, mercury, semivolatile metals, low volatile metals, and hydrochloric acid/chlorine gas under § 63.8(f) in lieu of compliance with the corresponding operating parameter limits under this section.

(6) *Calculation of rolling averages.*—(i) *Calculation of rolling averages initially.* The carbon monoxide and hydrocarbon CEMS must begin recording one-minute average values by 12:01 am and hourly rolling average values by 1:01 am, when 60 one-minute values will be available for calculating the initial hourly rolling average.

(ii) *Calculation of rolling averages upon intermittent operations.* You must ignore periods of time when one-minute values are not available for calculating the hourly rolling average. When one-minute values become available again, the first one-minute value is added to the previous 59 values to calculate the hourly rolling average.

(iii) *Calculation of rolling averages when the hazardous waste feed is cutoff.* (A) Except as provided by paragraph (a)(6)(iii)(B) of this section, you must continue to monitoring carbon monoxide and hydrocarbon when the hazardous waste feed is cutoff if the source is operating. You must not resume feeding hazardous waste if the emission levels exceed the standard.

(B) You are not subject to the CEMS requirements of this subpart during periods of time you meet the requirements of § 63.1206(b)(1)(ii) (compliance with emissions standards for nonhazardous waste burning sources when you are not burning hazardous waste).

(7) *Operating parameter limits for hydrocarbons.* If you elect to comply with the carbon monoxide and hydrocarbon emission standards by continuously monitoring carbon monoxide with a CEMS, you must demonstrate that hydrocarbon emissions during the comprehensive performance test do not exceed the hydrocarbon emissions standard. In addition, the limits you establish on the destruction and removal efficiency (DRE) operating parameters required under paragraph (j) of this section also ensure that you maintain compliance with the hydrocarbon emission standard. If you do not conduct the hydrocarbon demonstration and DRE tests concurrently, you must establish separate operating parameter limits under paragraph (j) of this section based on each test and the more restrictive of the operating parameter limits applies.

(b) *Other continuous monitoring systems (CMS).* (1) You must use CMS (e.g., thermocouples, pressure transducers, flow meters) to document compliance with the applicable operating parameter limits under this section.

(2) Except as specified in paragraphs (b)(2)(i) through (ii) of this section, you must install and operate non-CMS in conformance with § 63.8(c)(3) that requires you, at a minimum, to comply with the manufacturer's written specifications or recommendations for installation, operation, and calibration of the system:

(i) *Calibration of thermocouples.* The calibration of a thermocouple or other temperature sensor must be verified at least once every three months; and

(ii) *Accuracy and calibration of weight measurement devices.* The accuracy of weight measurement devices used to monitor flowrate of a feedstream (e.g., activated carbon feedrate, sorbent feedrate, nonpumpable waste) must be ± 1 percent of the weight being measured. The calibration of the device must be verified at least once every three months.

(3) CMS must sample the regulated parameter without interruption, and evaluate the detector response at least once each 15 seconds, and compute and record the average values at least every 60 seconds.

(4) The span of the non-CEMS CMS detector must not be exceeded. You must interlock the span limits into the automatic waste feed cutoff system required by § 63.1206(c)(3).

(5) *Calculation of rolling averages.*—(i) *Calculation of rolling averages*

assurance plan at the time of the CEMS failure. One-minute averages must not be rounded, smoothed, or disregarded.

* * * * *

PART 261—IDENTIFICATION AND LISTING OF HAZARDOUS WASTE

16. The authority citation for part 261 continues to read as follows:

Authority: 42 U.S.C. 6905, 6912(a), 6921, 6922, and 6938.

17. Section 261.38 is amended by adding paragraph (c)(2)(iv) to read as follows:

§ 261.38 Comparable/Syngas Fuel Exclusion.

* * * * *

(c) * * *

(2) * * *

(iv) Gas turbines used to produce electric power, steam, heated or cooled air, or other gases or fluids for sale.

* * * * *

PART 270—EPA ADMINISTERED PERMIT PROGRAMS: THE HAZARDOUS WASTE PERMIT PROGRAM

18. The authority citation for part 270 continues to read as follows:

Authority: 42 U.S.C. 6905, 6912, 6924, 6925, 6927, 6939, and 6974.

19. Section 270.42 is amended by revising paragraph (j)(1) to read as follows:

§ 270.42 Permit modification at the request of the permittee.

* * * * *

(j) * * *

(1) Facility owners or operators must comply with the Notification of Intent to Comply (NIC) requirements of 40 CFR 63.1210(b) and (c) before a permit modification can be requested under this section.

* * * * *

[FR Doc. 00–16515 Filed 7–7–00; 8:45 am]

BILLING CODE 6560–50–P

DEPARTMENT OF COMMERCE

National Oceanic and Atmospheric Administration

50 CFR Part 679

[Docket No. 000623193–0193–01; I.D. 060800D]

Fisheries of the Exclusive Economic Zone Off Alaska; Prohibited Species Catch in the Bering Sea and Aleutian Islands

AGENCY: National Marine Fisheries Service (NMFS), National Oceanic and Atmospheric Administration (NOAA), Commerce.

ACTION: Final 2000 harvest specifications; technical amendment.

SUMMARY: NMFS issues a technical amendment to the Final 2000 Harvest Specifications for Groundfish for the Bering Sea and Aleutian Islands (BSAI). A revision to Table 7 of the Final 2000 Harvest Specifications, which is prohibited species bycatch allowances for the BSAI trawl and non-trawl groundfish fisheries, is necessary to reflect reduced prohibited species bycatch allowances under Amendment 57 to the Fishery Management Plan for the Groundfish Fishery of the Bering Sea and Aleutian Islands Area (FMP).

DATES: Effective June 15, 2000, through 2400 hrs A.l.t. December 31, 2000.

FOR FURTHER INFORMATION CONTACT: Andrew N. Smoker, 907–586–7228.

SUPPLEMENTARY INFORMATION: NMFS manages the groundfish fishery in the BSAI according to the FMP prepared by the North Pacific Fishery Management Council (Council) under authority of the Magnuson-Stevens Fishery Conservation and Management Act. Regulations governing fishing by U.S. vessels in accordance with the FMP appear at subpart H of 50 CFR part 600 and 50 CFR part 679.

The Council, at its December 1999 meeting, recommended that the Final 2000 Harvest Specifications include prohibited species bycatch allowances proportionally reduced to reflect reduced prohibited species catch (PSC) limits under pending Amendment 57. Because the Final Harvest Specifications for Groundfish of the BSAI (65 FR 8282, February 18, 2000) were issued prior to Amendment 57 being approved by NMFS and implemented by regulations, the specifications set forth prohibited species bycatch allowances for the BSAI trawl fisheries based on the following pre-FMP Amendment 57 PSC limits: Pacific halibut, 3,775 mt; Zone 1 red king crab, 100,000 animals; *Chionoecetes* (*C.*) *opilio*, 4,500,000 animals; *C. bairdi* Zone 1, 900,000; and *C. bairdi* Zone 2, 2,550,000 animals.

Under the regulations implementing Amendment 57 to the FMP (65 FR 31105, May 16, 2000), which became effective June 15, 2000, the 2000 Pacific halibut and crab PSC limits for the BSAI trawl fisheries were reduced to the following amounts: Pacific halibut, 3,675 mt; Zone 1 red king crab, 97,000 animals; *C. opilio*, 4,350,000 animals; *C. bairdi* Zone 1,830,000; and *C. bairdi* Zone 2, 2,520,000 animals. The corresponding prohibited species bycatch allowances were reduced proportionally.

This technical amendment revises Table 7 of the Final 2000 Harvest Specifications for Groundfish of the BSAI accordingly to read as follows:

TABLE 7.—PROHIBITED SPECIES BYCATCH ALLOWANCES FOR THE BSAI TRAWL AND NON-TRAWL FISHERIES [1]

[All amounts are in metric tons]

	Prohibited Species and Zone					
	Halibut mortality (mt) BSAI	Herring (mt) BSAI	Red King Crab (animals) Zone 1	*C. opilio* (animals) COBLZ [2]	*C. bairdi* (animals)	
					Zone 1	Zone 2
Trawl Fisheries:						
Yellowfin sole	886	169	11655	2,876,579	288,750	1,514,683
January 20–March 31	262					
April 1–May 20	196					
May 21–July 3	48					
July 4–December 31	380					
Rocksole/oth. flat/flat sole [3]	779	24	42,090	869,934	309,326	504,894
January 20–March 31	448					
April 1–July 31	64					
July 4–December 31	167					
Turbot/sablefish/arrowtooth [4]		11		41,043		

§ 52.2423 [Amended]

3. In § 52.2423(f), the citation "Section 120–04–02.A.3." is revised to read "Section 9 VAC 5–40–20.A.3."

[FR Doc. 00–16366 Filed 7–5–00; 8:45 am]

BILLING CODE 6560–50–P

ENVIRONMENTAL PROTECTION AGENCY

40 CFR Part 63

[AD–FRL–6730–6]

RIN 2060–AE86

National Emission Standards for Hazardous Air Pollutants for Polyether Polyols Production; Synthetic Organic Chemical Manufacturing Industry; Epoxy Resins Production and Non-Nylon Polyamides Production; and Petroleum Refineries

AGENCY: Environmental Protection Agency (EPA).

ACTION: Withdrawal of amendment in direct final rule.

SUMMARY: Due to an adverse comment, the EPA is withdrawing an amendment from the May 8, 2000 direct final rule for National Emission Standards for Hazardous Air Pollutants (NESHAP) for Polyether Polyols Production; Synthetic Organic Chemical Manufacturing Industry; Epoxy Resins Production and Non-Nylon Polyamides Production; and Petroleum Refineries. The amendment being withdrawn deals with the definition of equipment leak in the Petroleum Refineries NESHAP. The withdrawal of the amendment from the direct final rule will only affect sources subject to the Petroleum Refineries NESHAP.

DATES: Amendment 6 in the direct final rule, which amends § 63.641, published on May 8, 2000 (65 FR 26491), is withdrawn as of July 6, 2000. The remaining amendments will be effective July 7, 2000, as stated in the May 8 rule.

ADDRESSES: Docket numbers A–90–20 (Hazardous Organic NESHAP); A–92–37 (Epoxy Resins Production and Non-Nylon Polyamides Production); A–93–48 (Petroleum Refineries); and A–96–38 (Polyether Polyols Production) contain supporting information used in developing the standards. The dockets are located at the U.S. Environmental Protection Agency, 401 M Street SW, Washington, DC 20460, in room M–1500, Waterside Mall (ground floor), and may be inspected from 8:30 a.m. to 5:30 p.m., Monday through Friday, excluding legal holidays.

FOR FURTHER INFORMATION CONTACT: Mr. Robert E. Rosensteel at (919) 541–5608, Emission Standards Division (MD–13), Environmental Protection Agency, Research Triangle Park, North Carolina 27711, electronic mail address "rosensteel.bob@epa.gov".

SUPPLEMENTARY INFORMATION: On May 8, 2000, the EPA published a direct final rule (65 FR 26491) and a parallel proposal (65 FR 26544) to amend portions of the NESHAP for Polyether Polyols Production; Synthetic Organic Chemical Manufacturing Industry; Epoxy Resins Production and Non-Nylon Polyamides Production; and Petroleum Refineries. The EPA stated in the direct final rule that if relevant, adverse comments were received by June 7, 2000, the EPA would publish a document to withdraw the affected portions of the direct final rule before its effective date of July 7, 2000. The EPA received an adverse comment on Amendment 6 in the direct final rule and, therefore, is withdrawing Amendment 6. This withdrawal of Amendment 6 only affects sources subject to the Petroleum Refineries NESHAP (40 CFR part 63, subpart CC). Amendment 6 would have changed the definition of equipment leak to add the term "connectors" to the equipment leak provisions in the NESHAP.

The adverse comment stated that the EPA's rationale for adding connectors to the list of equipment in the definition of equipment leak was not supported by the record of the rulemaking for the Petroleum Refineries NESHAP. It indicated that meetings with, and correspondence from, EPA and Congress supported flexibility and the New Source Performance Standard (NSPS) option without connectors. Therefore, the EPA is withdrawing this amendment and will decide the appropriate response to this comment. The 19 amendments for which we did not receive adverse comments will become effective on July 7, 2000, as provided in the May 8, 2000 direct final rule (65 FR 26491).

Dated: June 30, 2000.

Robert Brenner,

Acting, Assistant Administrator for Air and Radiation.

[FR Doc. 00–17068 Filed 7–5–00; 8:45 am]

BILLING CODE 6560–50–P

ENVIRONMENTAL PROTECTION AGENCY

40 CFR Part 180

[OPP–301008; FRL–6590–1]

RIN 2070–AB78

Tebufenozide; Pesticide Tolerances for Emergency Exemptions

AGENCY: Environmental Protection Agency (EPA).

ACTION: Final rule.

SUMMARY: This regulation establishes a time-limited tolerance for residues of tebufenozide (benzoic acid, 3,5-dimethyl-1-(1,1-dimethylethyl)-2-(4-ethylbenzoyl)hydrazide) in or on grapes. This action is in response to EPA's granting of an emergency exemption under section 18 of the Federal Insecticide, Fungicide, and Rodenticide Act authorizing use of the pesticide on grapes. This regulation establishes a maximum permissible level for residues of tebufenozide in this food commodity. The tolerance will expire and is revoked on December 31, 2001.

DATES: This regulation is effective July 6, 2000. Objections and requests for hearings, identified by docket control number OPP–301008, must be received by EPA on or before September 5, 2000.

ADDRESSES: Written objections and hearing requests may be submitted by mail, in person, or by courier. Please follow the detailed instructions for each method as provided in Unit VII. of the "SUPPLEMENTARY INFORMATION." To ensure proper receipt by EPA, your objections and hearing requests must identify docket control number OPP–301008 in the subject line on the first page of your response.

FOR FURTHER INFORMATION CONTACT: By mail: Barbara Madden, Registration Division (7505C), Office of Pesticide Programs, Environmental Protection Agency, 1200 Pennsylvania Ave., NW., Washington, DC 20460; telephone number, 703–305–6463; e-mail address: madden.barbara@epa.gov.

SUPPLEMENTARY INFORMATION:

I. General Information

A. Does this Action Apply to Me?

You may be potentially affected by this action if you are an agricultural producer, food manufacturer, or pesticide manufacturer. Potentially affected categories and entities may include, but are not limited to:

Federal Register

Monday,
June 19, 2000

Part II

Environmental Protection Agency

40 CFR Part 63

National Emission Standards for Hazardous Air Pollutants: Group I Polymers and Resins; and National Emission Standards for Hazardous Air Pollutants: Group IV Polymers and Resins; Final Rule

ENVIRONMENTAL PROTECTION AGENCY

40 CFR Part 63

[AD–FRL–6585–7]

RIN 2060–AH47

National Emission Standards for Hazardous Air Pollutants: Group I Polymers and Resins; and National Emission Standards for Hazardous Air Pollutants: Group IV Polymers and Resins

AGENCY: Environmental Protection Agency (EPA).

ACTION: Final rules; amendments.

SUMMARY: On September 5, 1996 and September 12, 1996, the EPA promulgated national emission standards for hazardous air pollutants (NESHAP) for Group I Polymers and Resins and the NESHAP for Group IV Polymers and Resins, respectively. In November 1996, petitions for review of the September 1996 Polymers and Resins I and IV rules were filed in the U.S. Court of Appeals for the District of Columbia Circuit. The petitioners raised numerous technical issues and concerns with these rules. In addition, on January 17, 1997, amendments to the Synthetic Organic Chemical Manufacturing Industry NESHAP (*i.e.*, the Hazardous Organic NESHAP, or HON) were promulgated; the HON is heavily referenced by both of the Polymers and Resins I and IV NESHAP. On March 9, 1999, the EPA proposed amendments to the Polymers and Resins I and IV NESHAP to address the issues raised by the petitioners and to update the rules as necessitated by the HON amendments. This document takes final action on those proposed amendments.

EFFECTIVE DATE: June 19, 2000.

ADDRESSES: Docket number A–92–44 for the Group I Polymers and Resins NESHAP and Docket number A–92–45 for the Group IV Polymers and Resins NESHAP contain supporting information used in developing the standards. The dockets are located at the U.S. Environmental Protection Agency, 401 M Street, SW, Washington, DC 20460 in Room M–1500, Waterside Mall (ground floor), and may be inspected from 8:30 a.m. to 5:30 p.m., Monday through Friday, excluding legal holidays.

FOR FURTHER INFORMATION CONTACT: For information concerning these final rule amendments, contact Mr. Robert Rosensteel, Organic Chemicals Group, Emission Standards Division (MD–13), Office of Air Quality Planning and Standards, U.S. EPA, Research Triangle Park, North Carolina 27711, telephone number (919) 541–5608, facsimile number (919) 541–3470, electronic mail address rosensteel.bob@epa.gov. For information concerning applicability and rule determinations, contact your State or local representative or the appropriate EPA Regional Office representatives.

SUPPLEMENTARY INFORMATION: Following is a listing of EPA Regional contacts.

EPA Regional Office Contacts

Director, Office of Environmental Stewardship
Attn: Air Compliance Clerk
U.S. EPA Region I, 1 Congress Street, Suite 1100 (SEA), Boston, MA 02114–2023, (617) 918–1740
Umesh Dholakia
U.S. EPA Region II, 290 Broadway Street, New York, NY 10007–1866, (212) 637–4023
Doreen Au
U.S. EPA Region III, 1650 Arch Street, Philadelphia, PA 19103, (215) 814–5471
Lee Page
U.S. EPA Region IV, 61 Forsyth Street, SW, Atlanta, GA 30303–3104, (404) 562–9131
Shaun Burke, IL/IN, (312) 353–5713
Joseph Cardile, MI/WI, (312) 353–2151
Erik Hardin, MN/OH, (312) 353–2402
U.S. EPA Region V, 77 West Jackson Boulevard, Chicago, IL 60604–3507
John Jones
U.S. EPA Region VI, 1445 Ross Avenue, Suite 1200 (6EN–AT), Dallas, TX 75202, (214) 665–7233
Gary Schlicht
U.S. EPA Region VII, 726 Minnesota Avenue, Kansas City, KS 66101, (913) 551–7097
Tami Thomas-Burton
U.S. EPA Region VIII, 999 18th Street, Suite 500, Denver, CO 80202, (303) 312–6581
Ken Bigos
U.S. EPA Region IX, 75 Hawthorne Street, San Francisco, CA 94105, (415) 744–1240
Dan Meyer
U.S. EPA Region X, 1200 Sixth Street, Seattle, WA 98101, (206) 553–4150

Docket. The docket is an organized and complete file of all the information considered by the EPA in the development of this rulemaking. The docket is a dynamic file because material is added throughout the rulemaking process. The docketing system is intended to allow members of the public and industries involved to readily identify and locate documents so that they can effectively participate in the rulemaking process. Along with the proposed and promulgated standards and their preambles, the contents of the docket will serve as the record in the case of judicial review. (See section 307(d)(7)(A) of the Clean Air Act (CAA).) An index for each docket, as well as individual items contained within the dockets, may be obtained by calling (202) 260–7548 or (202) 260–7549. Alternatively, docket indexes are available by facsimile, as described on the Office of Air and Radiation, Docket and Information Center Website at http://www.epa.gov/oar/docket. A reasonable fee may be charged for copying docket materials.

Worldwide Web (WWW). In addition to being available in the docket, an electronic copy of this final rule will be available on the WWW through the Technology Transfer Network (TTN). Following signature, a copy of the rule will be posted on the TTN's policy and guidance page for newly proposed or promulgated rules *http://www.epa.gov/ttn/oarpg*. The TTN provides information and technology exchange in various areas of air pollution control. If more information regarding the TTN is needed, call the TTN HELP line at (919) 541–5384.

Regulated Entities. The regulated category and entities affected by this action include:

Category	Standard Industrial Classification (SIC) Codes	(NAICS)	Examples of regulated entities
Industry	2821, 2822	325211, 325212	Butyl Rubber, Halobutyl Rubber, Epichlorohydrin Elastomer, Ethylene Propylene Rubber, Hypalon™, Neoprene, Nitrile Butadiene Rubber, Nitrile Butadiene Latex, Polybutadiene Rubber, Styrene-Butadiene Rubber or Latex, Acrylonitrile Butadiene Styrene Resin, Styrene Acrylonitrile Resin, Methyl Methacrylate Acrylonitrile Butadiene Styrene Resin, Methyl Methacrylate Butadiene Styrene Resin, Poly(ethylene terephthalate) Resin, Polystyrene Resin, and Nitrile Resin producers.

This table is not intended to be exhaustive, but rather provides a guide for readers likely to be interested in the revisions to the regulations affected by this action. To determine whether your facility is regulated by this action, you should carefully examine all of the applicability criteria in § 63.480 of the Polymers and Resins I rule and § 63.1310 of the Polymers and Resins IV rule. If you have any questions regarding the applicability of these amendments to a particular entity, consult your State or local representative or the appropriate EPA Regional Office representatives listed in the preceding **FOR FURTHER INFORMATION CONTACT** section.

Judicial Review. Amendments to Polymers and Resins I and IV NESHAP were proposed on March 9, 1999 (64 FR 11560). This action announces the EPA's final decisions on the rules. Under section 307(b)(1) of the CAA, judicial review of final rules is available by filing a petition for review in the U.S. Court of Appeals for the District of Columbia Circuit August 18, 2000. Under section 307(b)(2) of CAA, the requirements that are the subject of these final amendments may not be challenged later in civil or criminal proceedings brought by the EPA to enforce these requirements.

Outline. The information presented in this preamble is organized as follows:

I. What is the background of these rules?
II. What types of public comments were received on the March 9, 1999 proposal?
III. What major issues were raised in the public comments and what changes were made for the final amendments?
A. Compliance Dates
B. Flexible Operation Unit Applicability Provisions
C. Definitions
D. Additions to Existing Affected Sources
E. Halogenated Batch Process Vents
F. PET and Polystyrene Continuous Process Vents
G. Start-up, Shutdown, and Malfunction and Periods of Nonoperation
H. Organic HAP Lists
I. Other Clarifications
IV. What are the administrative requirements for these final amendments?
A. Executive Order 12866
B. Executive Order 13132
C. Executive Order 13084
D. Executive Order 13045
E. Unfunded Mandates Reform Act
F. Regulatory Flexibility Act (RFA), as amended by the Small Business Regulatory Enforcement Fairness Act of 1996 (SBREFA), 5 U.S.C. 601 *et seq.*
G. Paperwork Reduction Act
H. National Technology Transfer and Advancement Act
I. Congressional Review Act

I. What is the Background of These Rules?

On September 5, 1996 (61 FR 46906) and September 12, 1996 (61 FR 48208), we issued NESHAP for Group I Polymers and Resins (40 CFR part 63, subpart U) and Group IV Polymers and Resins (40 CFR part 63, subpart JJJ), respectively. On August 26, 1996 (61 FR 43698), prior to the promulgation of subparts U and JJJ, we proposed amendments to the HON, which subparts U and JJJ both reference. Subparts U and JJJ were modeled after the HON due to similarities in emission characteristics and emission controls at HON and Polymers and Resins affected sources.

On November 4, 1996, the Dow Chemical Company (Dow) filed petitions for review of the promulgated Polymers and Resins I and IV NESHAP in the U.S. Court of Appeals for the District of Columbia Circuit, *The Dow Chemical Company* v. *EPA*, 96–1417 and 96–1421 (D.C. Cir.). Dow raised over 280 technical issues on the rules' structure and applicability, including questions about the applicability of the HON amendments to subparts U and JJJ. Dow raised issues regarding details of the technical requirements, drafting clarity, and structural errors in the drafting of certain sections of the rules. On October 30, 1996, the Union Carbide Corporation filed a petition for review of the promulgated Polymers and Resins I NESHAP in the U.S. Court of Appeals for the District of Columbia Circuit, *Union Carbide Corporation* v. *EPA*, 96–1413 and Consolidated Cases (D.C. Cir.).

On March 9, 1999 (64 FR 11561), we proposed amendments to subparts U and JJJ to incorporate the concepts and new references related to the promulgated HON amendments and to propose changes pursuant to settlements reached with industry. In this action, we are promulgating the amendments proposed on March 9, 1999.

In addition to these final amendments to subparts U and JJJ, other actions taken to amend various aspects of subparts U and JJJ since the original promulgation of these rules in September of 1996 include the following **Federal Register** notices: January 14, 1997 (62 FR 1835), equipment leaks compliance date extension for both rules; June 6, 1997 (62 FR 30993), equipment leaks compliance date extension for poly(ethylene terephthalate) (PET) resin affected sources; July 15, 1997 (62 FR 37720), minor corrections and clarifications to the rules; February 27, 1998 (63 FR 9944), change in the effective date of the rule for subpart JJJ to February 27, 1998; March 31, 1998 (63 FR 15312), a temporary compliance extension until February 27, 2001 for existing affected sources producing PET using the continuous terephthalic acid (TPA) high viscosity multiple end finisher process; December 9, 1998 (63 FR 67879), notification of a proposed partial settlement; March 9, 1999 (64 FR 11536), clarifications and corrections to the promulgated rules; May 7, 1999 (64 FR 24511), withdrawal, as a result of adverse comments, of one amendment from the amendments in the March 9, 1999 direct final rule; June 8, 1999 (64 FR 30406), equipment leaks compliance date extension for new and existing affected sources producing PET; June 8, 1999 (64 FR 30456), proposed denial of petition for reconsideration of the equipment leak requirements in subpart JJJ; and June 30, 1999 (64 FR 35023), indefinite stay of the compliance dates for certain provisions under subparts U and JJJ.

II. What Types of Public Comments Were Received on the March 9, 1999 Proposal?

We received six public comment letters on the March 9, 1999 proposed amendments. All comment letters were from industry representatives. The comment letters generally supported the proposed amendments, but also suggested clarifications and corrections to the proposed amendments. We considered these comments and, where appropriate, made changes to the proposed amendments. This preamble summarizes significant issues raised and the changes to the proposed amendments. Our response to all comments can be found in National Emission Standards for Hazardous Air Pollutants for Polymers and Resins (Groups I and IV): Summary of Public Comments and Responses on Proposed Amendments, EPA–453/R–99–001. This document may be found in both dockets.

III. What Major Issues Were Raised in the Public Comments and What Changes Were Made for the Final Amendments?

As noted above, these final amendments incorporate the concepts and new references in response to the promulgated HON amendments and include changes related to settlement negotiations with industry. In addition to a number of clarifications and reference changes, the amendments include changes to the applicability provisions for flexible operation units, the batch process vent group determination procedures, and the reporting and recordkeeping requirements. We believe that these

changes provide additional clarity to the rules. In the preamble to the March 9, 1999 proposed amendments, we provided a detailed explanation of the proposed amendments. The following discussion summarizes the major public comments on the proposed amendments and significant changes made in response to these comments.

A. Compliance Dates

Due to the extensive nature of the proposed amendments and the proximity of the proposed amendments to the September 1999 compliance dates (September 5 for subpart U and September 12 for subpart JJJ), several commenters requested an extension of the compliance dates for existing sources. They indicated that due to the proposed amendments, they would have to re-evaluate applicability, compliance status, and the basis for demonstrating compliance. As discussed in the preamble to the proposed amendments (64 FR 11573), we were aware of the possibility that specific proposed amendments might affect the compliance status of one or more facilities. We specifically requested comments on this issue, along with specific examples of the proposed rule changes that could cause a facility to be out of compliance.

After review of the comments submitted in response to that request and the specific proposed rule examples provided, we decided that setting a new compliance date for the amended rule was warranted. Therefore, on June 30, 1999, we published a direct final rule in the **Federal Register** (64 FR 35023) which stayed certain compliance dates "indefinitely." That stay was effective August 30, 1999. Specifically, that action stayed the existing source compliance dates for storage vessels, process vents, back-end process operations (subpart U only), heat exchange systems, and wastewater. That stay did not impact the equipment leaks at any facility or the process contact cooling tower provisions at facilities that produce PET using a continuous terephthalic acid high viscosity multiple end finisher process. That action also stayed the compliance date for all emission sources at new affected sources that had an initial start-up date on or after March 9, 1999.

In the June 30, 1999 **Federal Register** document, we indicated that we would publish new compliance dates, which would provide a reasonable amount of time in which to comply with the amended regulations, when we promulgated the final amendments to the regulations. As pointed out by the commenters, many of the proposed rule changes that may affect compliance are related to the provisions that are used to determine whether controls are required for a particular emission point. In addition, we recognized that a change in compliance date also affects certain reports that the promulgated rules required to be submitted prior to the compliance date (discussed below). One commenter suggested a compliance date of at least 9 months after promulgation of the amendments. However, we did not believe that 9 months was a sufficient time period to allow for (1) the re-evaluation of whether controls are required by the owner or operator, (2) the submission of reports that are due prior to the compliance date, and (3) the review of these reports by the Administrator. We concluded that 1 year was a reasonable amount of time for accomplishment of these activities.

Therefore, the final amendments require that existing affected sources comply with the nonequipment leak requirements by June 19, 2001. The final amendments also require, in accordance with the CAA, that all new affected sources comply with the amended regulations on June 19, 2000, or at initial start-up, whichever is later. Note: New affected sources that produce PET as their primary product are not required to comply with the equipment leak provisions in § 63.1331 until February 27, 2001 or at initial start-up, whichever is later.

The promulgated rules require the owner or operator to submit two reports, the precompliance report and the emissions averaging plan (if applicable), prior to the compliance date. The promulgated rules originally required the owner or operator to submit these reports prior to the publication of the proposed amendments on March 9, 1999. We believe that facilities should have the opportunity to submit, or resubmit, these reports after evaluating the final amendments. Therefore, the final amendments change the required submission date of the emissions averaging plan to September 19, 2000 (9 months before the compliance date) and the due date of the precompliance report to December 19, 2000 (6 months before the compliance date). Even if a facility does not need to make changes to an emissions averaging plan or precompliance report previously submitted, the facility must either resubmit the plan or report, or submit a notification that the previously submitted plan or report is still valid. This will avoid any confusion regarding your intention.

In another compliance date issue, a commenter requested that the EPA change the compliance date for new emission points and newly created Group 1 emission points to 120 days after the initial start-up, rather than the proposed requirement that such points be in compliance at initial start-up. Upon consideration of the comments, we agree that time may be necessary to evaluate the actual impact of a process change after initial start-up in some instances. Therefore, the final rule requires that new emission points and newly created Group 1 emission points be in compliance with the existing source requirements within 120 days of initial start-up.

B. Flexible Operation Unit Applicability Provisions

The promulgated rules specify that the owner or operator must redetermine the primary product of a flexible operation unit (based on actual previous production) whenever changes in products occur that could reasonably be expected to change the primary product. If the primary product indeed changes, then the process unit would no longer be subject to subpart U or JJJ if the new primary product makes the process unit subject to another subpart of 40 CFR part 63 (*i.e.*, another maximum achievable control technology (MACT) standard). If the new primary product does not make the process unit subject to another MACT standard, then the process unit must continue to comply with subpart U or JJJ, provided that the production of elastomer/thermoplastic continues. One commenter objected to the idea that the owner or operator of an elastomer product process unit (EPPU) or thermoplastic product process unit (TPPU) that has been operating as a flexible operation unit must continue to comply with subpart U or JJJ, even when an elastomer/thermoplastic product is no longer the primary product of the flexible operation unit.

If we had incorporated the commenter's suggestion, a major source could have continued to produce a product covered by a MACT standard (*i.e.*, an elastomer or thermoplastic) and emit hazardous air pollutants (HAP) but not be subject to any requirements to reduce those HAP emissions. Therefore, controls used to reduce HAP might be removed. We believe that such a situation is contrary to the intent of section 112 of the CAA; therefore, we did not change the final rule in response to this comment.

We did make a clarification to the proposed flexible operation unit applicability provisions with regard to annual redeterminations. This change clarifies that annual applicability determinations are not required for flexible operation units in which the

owner or operator does not intend to produce elastomer/thermoplastic in the future.

C. Definitions

We revised several proposed definitions in response to comments. The proposed addition of a definition of *net positive heating value* was an attempt to provide additional clarification to the definition of *recovery device*, which uses the term *net positive heating value*. After review of the comments, we concluded that a single all-inclusive definition that works for this term was not possible, and we removed the entire term from the final amendments. Therefore, you must be able to demonstrate, in engineering terms appropriate to each individual situation, that a recovered stream has net positive heating value.

A commenter pointed out that the proposed definition of *supplemental combustion air* could be interpreted to require application of the oxygen correction factor when a facility adds air to exhaust streams controlled by catalytic oxidizers to ensure proper operation and to prevent damage to the catalyst bed. We agree a facility should not consider air added to ensure proper operation and to avoid damage to a catalytic oxidizer to be *supplemental combustion air;* therefore, the definition of *supplemental combustion air* in the final amendments includes an additional sentence clarifying this point.

We agree with a commenter that the proposed definition of *stripping* in subpart U used language that excluded certain operations, specifically drum dryers which have devolatilization as their primary purpose. Therefore, the final definition of *stripping* clarifies that processes that occur in dryers with the primary purpose of devolatilization are considered to be stripping.

We also agree with commenters that the proposed change to the definition of *elastomer product* in subpart U, which separated polybutadiene rubber by solution and styrene butadiene rubber by solution into two different products, was not appropriate. At the majority of facilities, these two polymers are produced in the same process. Further, in the solution process that is used at these facilities, the HAP emissions are primarily from the use of the solvent, not the reactants, which means that there is little difference in emissions between the two products. In fact, total HAP emissions were usually reported for the entire facility and not for the individual products, so we originally developed the back-end process operation limitations based on the emissions from both of these polymers. Therefore, we recombined these polymers as a single elastomer product in the final amendments.

Changes were also made to the definition of *material* recovery section in subpart JJJ to clarify that contact and non-contact condensers removing ethylene glycol from vapor streams coming out of polymerization vessels are part of the polymerization reaction section.

D. Additions to Existing Affected Sources

The proposed definition of *reconstruction* and the proposed provisions that applied the definition of *reconstruction* (§§ 63.480(i)(2)(i) and 63.1310(i)(2)(i)) were inconsistent. To summarize, the proposed §§ 63.480(i)(2)(i) and 63.1310(i)(2)(i) stated that if a facility made any process change or addition that met the definition of reconstruction after June 5, 1995 (June 12, 1995 for subpart JJJ), the source is a new affected source. However, the proposed definition of *reconstruction* in §§ 63.482 and 63.1312 only addressed the *replacement*, and not the *addition*, of components. One commenter suggested that we amend the definition of *reconstruction* to also include additions.

The general provisions for part 63 clearly separate replacements from additions. The definition of *reconstruction* in the general provisions only addresses the *replacement* of components, while § 63.5(b)(6) of the general provisions addresses additions. In the proposed language for §§ 63.480(i)(2)(i) and 63.1310(i)(2)(i), we combined these two concepts, thus creating confusion and making them inconsistent with our policies regarding replacements and additions. Therefore, rather than amend the definition of *reconstruction* in §§ 63.482 and 63.1312, we revised the provisions in §§ 63.480(i)(2) and 63.1312(i)(2) to clearly distinguish how a facility is to handle replacements of components and additions. In summary, if the replacement of components at an existing affected source meets the definition of *reconstruction*, then the affected source becomes a new affected source. If an owner or operator makes an addition to an existing affected source, then the addition becomes part of the existing affected source.

E. Halogenated Batch Process Vents

The purpose of the halogenated vent provisions is to reduce the hydrogen halides that are created when halogenated organic compounds are routed to a combustion device. Therefore, the important location for determining whether a vent stream is halogenated is prior to the stream entering a combustion device. The location specified in both subparts U and JJJ for making batch vent group determinations is at the exit of the batch unit operation (*i.e.*, before any recovery, recapture, or combustion device). Therefore, any reduction in the mass emission rate of halogen atoms that occurs in a recovery or recapture device would not be taken into account. A commenter requested that the rules allow the determination of the concentration of each organic compound containing halogen atoms at the recovery device or process discharge for the purposes of determining the halogenated status of a vent stream. We agree with the commenter. We have changed the rules to specify that an owner or operator must determine the concentration of each organic compound containing halogen atoms at the exit of the last recovery or recapture device.

F. PET and Polystyrene Continuous Process Vents

Continuous process vents at PET and polystyrene affected sources are subject to emission limitations that apply to all process vents in entire sections (*i.e.*, material recovery section, polymerization reaction section) of the process unit. This differs from the requirements for other continuous process vents which are subject to control requirements based on the group status of individual process vents.

One commenter requested that the rule exempt process vents at PET and polystyrene affected sources subject to these section-specific emission limitations from certain control, testing, and recordkeeping requirements if they meet the Group 2 criteria. However, since the concept of group status does not apply for these process vents, we did not make changes in response to these comments. We believe that the emission limitations for process vents in the applicable sections, which were determined to be the MACT floor for the applicable subcategories, provide an owner or operator with various compliance demonstration options, including a kilogram of HAP per megagram of product limit, which allow the owner or operator to choose which process vents to control.

Paragraph § 63.1313(b) of subpart JJJ addresses the control of combined streams. One commenter believed that these provisions do not adequately address how to handle process vents in sections of PET and polystyrene facilities that are subject to the requirements in §§ 63.1316 through

63.1320 and other combined streams that do not include Group 1 emission streams. The commenter suggests using the Total Resource Effectiveness (TRE) value to determine applicability for this combined vent stream, and if the combined stream does not meet the Group 1 criteria, no control would be required.

If a combined emission stream has no Group 1 emission streams, the combined emission stream could either (1) have no emission streams requiring control, or (2) have process vent emission streams subject to §§ 63.1316 through 63.1320. For the first case, there is no reason for an owner or operator to evaluate the combined emission stream for control. For the second case, consider the following example. A facility makes polystyrene using a continuous process so emissions from the material recovery section must be controlled in accordance with § 63.1316(c). If a stream from the material recovery section is combined with emission streams that are not required to be controlled (*i.e.*, Group 2 emission streams), and the TRE of the combined stream does not meet the Group 1 criteria, then no control would be required if we adopted the commenter's suggested approach of applying the TRE to these combined streams. The result would be that emissions that are required to be controlled under § 63.1316(c) would not be controlled. This approach would result in a situation where the control requirements of §§ 63.1316 through 63.1320 could be circumvented by combining subject streams with other streams that are not required to be controlled. Therefore, we believe that the provisions in § 63.1313(b) adequately address the situations raised by the commenter, and we did not change the rule in response to this comment.

G. Start-up, Shutdown, and Malfunction and Periods of Nonoperation

We received several comments on the provisions related to the requirements during start-up, shutdown, and malfunction and during periods of nonoperation. As a result of these comments, we made the following changes. The promulgated rules require that owners and operators implement measures to prevent or minimize excess emissions during periods of start-up, shutdown, and malfunction. One commenter suggested changes to the definition of excess emissions with which we agreed. Therefore, in the final rule, we have defined excess emissions as "emissions greater than those allowed by the emissions limitation which would apply during operational periods other than start-up, shutdown, and malfunction." Commenters also made suggestions related to the records required during periods of start-up, shutdown, and malfunction. In response to these comments, we reduced the amount of information required to be submitted with reports of start-ups, shutdowns, and malfunctions to the level specified by the 40 CFR part 63 general provisions. Finally, we revised Table 1 of both promulgated rules to clarify that immediate start-up, shutdown, and malfunction reports are not required.

H. Organic HAP Lists

As a result of comments, we revised the tables specifying known HAP emitted from the production of specific elastomer/thermoplastic products (Table 5 in subpart U and Table 6 in subpart JJJ). Specifically, Table 5 in subpart U no longer identifies hexane, toluene, and xylenes as known organic HAP emitted from the production of styrene butadiene rubber by emulsion and styrene butadiene latex elastomer. We have no information that indicates that these HAP are used or emitted from the production of these elastomer products, but they were inadvertently identified in the table as known organic HAP emitted from their production. Carbon disulfide is a HAP known to be emitted during the production of styrene butadiene rubber via an emulsion process, so we added carbon disulfide to the table and indicated that it is a known organic HAP emitted from the production of styrene butadiene rubber by emulsion. Also, Table 6 of subpart JJJ no longer identifies 1,3-butadiene as a known organic HAP emitted from the production of actrylonitrile styrene acrylate resin/alpha methyl styrene acrylonitrile resin (ASA/AMSAN), as we have no information that indicates ASA/AMSAN production processes use or emit this HAP.

I. Other Clarifications

A change was made to clarify that process units that produce elastomers which are, in turn, used at least 50 percent of the time to produce thermoplastics, are subject to subpart JJJ and not subpart U. Another change clarifies that changes that do not alter the equipment configuration and operation conditions are not process changes, and that these configurations and conditions are not required to be documented in the Notification of Compliance Status reports. We made changes to clarify the organic HAP subject to the process and maintenance wastewater requirements. In subpart U, we made a change to clarify the elastomer products that are not subject to back-end process operation residual HAP limitations. We also clarified the monitoring requirements for flares used to control process back-end HAP emissions.

IV. What Are the Administrative Requirements for These Final Amendments?

A. Executive Order 12866

Under Executive Order 12866 (58 FR 51735, October 4, 1993), the EPA must determine whether the regulatory action is "significant" and therefore subject to the Office of Management and Budget (OMB) review and the requirements of the Executive Order. The Executive Order defines "significant regulatory action" as one that is likely to result in a rule that may:

(1) Have an annual effect on the economy of $100 million or more or adversely affect in a material way the economy, productivity, competition, jobs, the environment, public health or safety, or state, local, or tribal governments or communities;

(2) Create a serious inconsistency or otherwise interfere with an action taken or planned by another agency;

(3) Materially alter the budgetary impact of entitlements, grants, user fees, or loan programs or the rights and obligations of recipients thereof; or

(4) Raise novel legal or policy issues arising out of legal mandates, the President's priorities, or the principles set forth in the Executive Order.

Pursuant to the terms of Executive Order 12866, it has been determined that these amendments are not a "significant regulatory action" because they do not meet any of the above criteria. Consequently, these amendments were not submitted to OMB for review under Executive Order 12866.

B. Executive Order 13132

Executive Order 13132, entitled "Federalism" (64 FR 43255, August 10, 1999) requires EPA to develop an accountable process to ensure "meaningful and timely input by State and local officials in the development of regulatory policies that have federalism implications." "Policies that have federalism implications" is defined in the Executive Order to include regulations that have "substantial direct effects on the States, on the relationship between the national government and the States, or on the distribution of power and responsibilities among the various levels of government." Under section 6 of Executive Order 13132, EPA

may not issue a regulation that has federalism implications, that imposes substantial direct compliance costs, and that is not required by statute, unless the Federal government provides the funds necessary to pay the direct compliance costs incurred by State and local governments, or EPA consults with State and local officials early in the process of developing the regulation. The EPA also may not issue a regulation that has federalism implications and that preempts State law unless the Agency consults with State and local officials early in the process of developing the regulation.

These amendments do not have federalism implications. They will not have substantial direct effects on the States, on the relationship between the national government and the States, or on the distribution of power and responsibilities among the various levels of government, as specified in Executive Order 13132. Thus, the requirements of section 6 of Executive Order 13084 do not apply to these amendments.

C. Executive Order 13084

Under Executive Order 13084, EPA may not issue a regulation that is not required by statute, that significantly or uniquely affects the communities of Indian tribal governments, and that imposes substantial direct compliance costs on those communities, unless the Federal government provides the funds necessary to pay the direct compliance costs incurred by the tribal governments, or EPA consults with those governments. If EPA complies by consulting, Executive Order 13084 requires EPA to provide to OMB, in a separately identified section of the preamble to the rule, a description of the extent of EPA's prior consultation with representatives of affected tribal governments, a summary of the nature of their concerns, and a statement supporting the need to issue the regulation. In addition, Executive Order 13084 requires EPA to develop an effective process permitting elected officials and other representatives of Indian tribal governments "to provide meaningful and timely input in the development of regulatory policies on matters that significantly or uniquely affect their communities." These rules do not significantly or uniquely affect the communities of Indian tribal governments. No tribal governments own or operate an affected source. Accordingly, the requirements of section 3(b) of Executive Order 13084 do not apply to these amendments.

D. Executive Order 13045

Executive Order 13045 (62 FR 19885, April 23, 1997), applies to any rule that: (1) Is determined to be "economically significant" as defined under Executive Order 12866, and (2) concerns an environmental health or safety risk that the EPA has reason to believe may have a disproportionate effect on children. If the regulatory action meets both criteria, the Agency must evaluate the environmental health or safety effects of the planned rule on children, and explain why the planned regulation is preferable to other potentially effective and reasonably feasible alternatives considered by the Agency.

The EPA interprets Executive Order 13045 as applying only to those regulatory actions that are based on health or safety risks, such that the analysis required under section 5–501 of the Order has the potential to influence the regulation. These rules fall into that category only in part: the minimum rule stringency for subparts U and JJJ is set according to a congressionally-mandated, technology-based lower limit called the "floor," while a decision to increase the stringency beyond this floor can be based on risk considerations. Thus, Executive Order 13045 applies to these rules only to the extent that the Agency may consider the inherent toxicity of a regulated pollutant, and any differential impact such a pollutant may have on children's health, in deciding whether to adopt control requirements more stringent than the floor level.

These amendments are not subject to Executive Order 13045 because they are not economically significant as defined in Executive Order 12866. No children's risk analysis was performed for these amendments because no alternative technologies exist that would provide greater stringency at a reasonable cost. Therefore, the results of any such analysis would have no impact on the stringency decision.

E. Unfunded Mandates Reform Act

Title II of the Unfunded Mandates Reform Act of 1995 (UMRA), Public Law 104–4, establishes requirements for Federal agencies to assess the effects of their regulatory actions on State, local, and tribal governments and the private sector. Under section 202 of the UMRA, the EPA generally must prepare a written statement, including a cost-benefit analysis, for proposed and final rules with "Federal mandates" that may result in expenditures to State, local, and tribal governments, in the aggregate, or by the private sector, of $100 million or more in any 1 year. Before promulgating an EPA rule for which a written statement is needed, section 205 of the UMRA generally requires the EPA to identify and consider a reasonable number of regulatory alternatives and adopt the least costly, most cost-effective, or least-burdensome alternative that achieves the objectives of the rule. The provisions of section 205 do not apply when they are inconsistent with applicable law. Moreover, section 205 allows the EPA to adopt an alternative other than the least-costly, most cost-effective, or least-burdensome alternative if the Administrator publishes with the final rule an explanation why that alternative was not adopted. Before the EPA establishes any regulatory requirements that may significantly or uniquely affect small governments, including tribal governments, it must have developed under section 203 of the UMRA a small government agency plan. The plan must provide for notifying potentially affected small governments, enabling officials of affected small governments to have meaningful and timely input in the development of EPA regulatory proposals with significant Federal intergovernmental mandates, and informing, educating, and advising small governments on compliance with the regulatory requirements.

The EPA has determined that these amendments do not contain a Federal mandate that may result in expenditures of $100 million or more for State, local, and tribal governments, in the aggregate, or in the private sector in any 1 year. Thus, today's amendments are not subject to the requirements of sections 202 and 205 of the UMRA. In addition, the EPA has determined that these amendments contain no regulatory requirements that might significantly or uniquely affect small governments, because they contain no requirements that apply to such governments or impose obligations on them. Therefore, today's amendments are not subject to the requirements of section 203 of the UMRA.

F. Regulatory Flexibility Act (RFA), as Amended by the Small Business Regulatory Enforcement Fairness Act of 1996 (SBREFA), 5 U.S.C. 601 et seq.

The RFA generally requires an agency to prepare a regulatory flexibility analysis of a rule subject to notice and comment rulemaking requirements under the Administrative Procedure Act or any other statute unless the agency certifies that the rule will not have a significant economic impact on a substantial number of small entities. Small entities include small businesses,

small organizations, and small governmental jurisdictions.

For purposes of assessing the impacts of these amendments on small entities, small entity is defined as: (1) A small business that has less than 750 employees and is unaffiliated with a larger domestic entity; (2) a small governmental jurisdiction that is a government of a city, county, town, school district, or special district with a population of less than 50,000; and (3) a small organization that is any not-for-profit enterprise which is independently owned and operated and is not dominant in its field.

After considering the economic impacts of these amendments on small entities, we have concluded that these actions will not have a significant economic impact on a substantial number of small entities, because they include primarily clarifications and amendments to reduce the reporting and recordkeeping burden, thus they impose no additional regulatory requirements on owners or operators of affected sources.

G. Paperwork Reduction Act

For both the Group I and Group IV Polymers and Resins NESHAP, the information collection requirements (ICRs) were submitted to OMB under the Paperwork Reduction Act. At promulgation, OMB had already approved the ICR for the Group IV Polymers and Resins NESHAP and assigned OMB control number 2060–0351. Subsequently, OMB approved the ICR for the Group I Polymers and Resins NESHAP, and on July 15, 1997 (62 FR 37720) assigned OMB control number 2060–0356.

An Agency may not conduct or sponsor, and a person is not required to respond to a collection of information unless it displays a currently valid OMB control number. The OMB control numbers for EPA's regulations are listed in 40 CFR part 9 and 48 CFR Chapter 15. The EPA has amended 40 CFR 9.1 to indicate the ICRs contained in the Group I and IV Polymers and Resins NESHAP.

The amendments to the NESHAP contained in this final rule should have no impact on the information collection burden estimates made previously. Therefore, the ICRs have not been revised.

H. National Technology Transfer and Advancement Act

Section 12(d) of the National Technology Transfer and Advancement Act of 1995 (NTTAA), Public Law 104–113, (15 U.S.C. 272 note), directs all Federal agencies to use voluntary consensus standards instead of government-unique standards in their regulatory activities unless to do so would be inconsistent with applicable law or would be otherwise impractical. Voluntary consensus standards are technical standards (*e.g.*, material specifications, test method, sampling and analytical procedures, business practices, etc.) that are developed or adopted by one or more voluntary consensus standards bodies. Examples of organizations generally regarded as voluntary consensus standards bodies include the American Society for Testing and Materials (ASTM), the National Fire Protection Association (NFPA), and the Society of Automotive Engineers (SAE). The NTTAA requires Federal agencies like EPA to provide Congress, through OMB, with explanations when the Agency decides not to use available and applicable voluntary consensus standards.

During the rulemaking, the Agency searched for voluntary consensus standards that might be applicable. The search has identified no applicable voluntary standards. Accordingly, the NTTAA requirement to use applicable voluntary consensus standards does not apply to these amendments.

I. The Congressional Review Act

The Congressional Review Act, 5 U.S.C. 801 *et seq.*, as added by the Small Business Regulatory Enforcement Fairness Act of 1996, generally provides that before a rule may take effect, the agency promulgating the rule must submit a rule report, which includes a copy of the rule, to each House of the Congress and to the Comptroller General of the United States. The EPA will submit a report containing this rule and other required information to the U.S. Senate, the U.S. House of Representatives, and the Comptroller General of the United States prior to publication of the rule in the **Federal Register**. A major rule cannot take effect until 60 days after it is published in the **Federal Register**. This action is not a "major rule" as defined by 5 U.S.C. 804(2). This rule will be effective June 19, 2000.

List of Subjects in 40 CFR Part 63

Environmental protection, Administrative practice and procedure, Air pollution control, Hazardous substances, Intergovernmental relations, Reporting and recordkeeping requirements.

Dated: April 20, 2000.

Carol M. Browner,

Administrator.

For the reasons set out in the preamble, part 63 of title 40, chapter I of the Code of Federal Regulations is amended as follows:

PART 63—NATIONAL EMISSION STANDARDS FOR HAZARDOUS AIR POLLUTANTS FOR SOURCE CATEGORIES

1. The authority citation for part 63 continues to read as follows:

Authority: 42 U.S.C. 7401, *et seq.*

Subpart U—National Emission Standards for Hazardous Air Pollutant Emissions: Group I Polymers and Resins

2. Section 63.480 is amended by:

a. Revising paragraph (a);
b. Revising paragraph (b);
c. Revising paragraph (c);
d. Revising paragraph (d);
e. Revising paragraph (e);
f. Revising paragraph (f);
g. Revising paragraph (g) introductory text;
h. Revising paragraphs (g)(1) through (g)(4);
i. Revising paragraphs (g)(6), through (g)(8);
j. Revising paragraph (h) introductory text;
k. Revising paragraphs (h)(1) through (h)(4);
l. Revising paragraphs (h)(6) and (h)(7);
m. Revising paragraph (i) introductory text;
n. Revising paragraph (i)(1) introductory text;
o. Revising paragraphs (i)(1)(i) and (i)(1)(ii);
p. Revising paragraph (i)(2)(i) introductory text;
q. Revising paragraph (i)(2)(i)(A);
r. Revising paragraphs (i)(2)(ii) and (i)(2)(iii);
s. Revising paragraphs (i)(3) through (i)(5);
t. Revising paragraph (j); and
u. Adding paragraph (i)(6).

The revisions and additions read as follows:

§ 63.480 Applicability and designation of affected sources.

(a) *Definition of affected source.* The provisions of this subpart apply to each affected source. Affected sources are described in paragraphs (a)(1) through (a)(4) of this section.

(1) An affected source is either an existing affected source or a new affected source. Existing affected source

is defined in paragraph (a)(2) of this section, and new affected source is defined in paragraph (a)(3) of this section.

(2) An existing affected source is defined as each group of one or more elastomer product process units (EPPU) and associated equipment, as listed in paragraph (a)(4) of this section, that is not part of a new affected source, as defined in paragraph (a)(3) of this section, that is manufacturing the same primary product and that is located at a plant site that is a major source.

(3) A new affected source is defined by the criteria in paragraph (a)(3)(i), (a)(3)(ii), or (a)(3)(iii) of this section. The situation described in paragraph (a)(3)(i) of this section is distinct from those situations described in paragraphs (a)(3)(ii) and (a)(3)(iii) of this section and from any situation described in paragraph (i) of this section.

(i) At a site without HAP emission points before June 12, 1995 (*i.e.*, a "greenfield" site), each group of one or more EPPU and associated equipment, as listed in paragraph (a)(4) of this section, that is manufacturing the same primary product and that is part of a major source on which construction commenced after June 12, 1995;

(ii) A group of one or more EPPU meeting the criteria in paragraph (i)(1)(i) of this section; or

(iii) A reconstructed affected source meeting the criteria in paragraph (i)(2)(i) of this section.

(4) *Emission points and equipment.* The affected source also includes the emission points and equipment specified in paragraphs (a)(4)(i) through (a)(4)(iv) of this section that are associated with each applicable group of one or more EPPU constituting an affected source.

(i) Each waste management unit.

(ii) Maintenance wastewater.

(iii) Each heat exchange system.

(iv) Equipment required by, or utilized as a method of compliance with, this subpart which may include control devices and recovery devices.

(5) EPPUs and associated equipment, as listed in paragraph (a)(4) of this section, that are located at plant sites that are not major sources are neither affected sources nor part of an affected source.

(b) *EPPUs without organic HAP.* The owner or operator of an EPPU that is part of an affected source, as defined in paragraph (a) of this section, but that does not use or manufacture any organic HAP shall comply with the requirements of either paragraph (b)(1) or (b)(2) of this section. Such an EPPU is not subject to any other provision of this subpart and is not required to comply with the provisions of subpart A of this part.

(1) Retain information, data, and analyses used to document the basis for the determination that the EPPU does not use or manufacture any organic HAP. Types of information that could document this determination include, but are not limited to, records of chemicals purchased for the process, analyses of process stream composition, engineering calculations, or process knowledge.

(2) When requested by the Administrator, demonstrate that the EPPU does not use or manufacture any organic HAP.

(c) *Emission points not subject to the provisions of this subpart.* The affected source includes the emission points listed in paragraphs (c)(1) through (c)(9) of this section, but these emission points are not subject to the requirements of this subpart or to the provisions of subpart A of this part.

(1) Equipment that does not contain organic HAP and is located at an EPPU that is part of an affected source;

(2) Stormwater from segregated sewers;

(3) Water from fire-fighting and deluge systems in segregated sewers;

(4) Spills;

(5) Water from safety showers;

(6) Water from testing of deluge systems;

(7) Water from testing of firefighting systems;

(8) Vessels and equipment storing and/or handling material that contains no organic HAP or organic HAP as impurities only; and

(9) Equipment that is intended to operate in organic HAP service for less than 300 hours during the calendar year.

(d) *Processes exempted from the affected source.* Research and development facilities are exempted from the affected source.

(e) *Applicability determination of elastomer equipment included in a process unit producing a non-elastomer product.* If an elastomer product that is subject to this subpart is produced within a process unit that is subject to subpart JJJ of this part, and at least 50 percent of the elastomer is used in the production of the product manufactured by the subpart JJJ process unit, the unit operations involved in the production of the elastomer are considered part of the process unit that is subject to subpart JJJ, and not this subpart.

(f) *Primary product determination and applicability.* An owner or operator of a process unit that produces or plans to produce an elastomer product shall determine if the process unit is subject to this subpart in accordance with this paragraph. The owner or operator shall initially determine whether a process unit is designated as an EPPU and subject to the provisions of this subpart in accordance with either paragraph (f)(1) or (f)(2) of this section. The owner or operator of a flexible operation unit that was not initially designated as an EPPU, but in which an elastomer product is produced, shall conduct an annual re-determination of the applicability of this subpart in accordance with paragraph (f)(3) of this section. Owners or operators that anticipate the production of an elastomer product in a process unit that was not initially designated as an EPPU, and in which no elastomer products are currently produced, shall determine if the process unit is subject to this subpart in accordance with paragraph (f)(4) of this section. Paragraphs (f)(3) and (f)(5) through (f)(7) of this section discuss compliance only for flexible operation units. Other paragraphs apply to all process units, including flexible operation units, unless otherwise noted. Paragraph (f)(8) of this section contains reporting requirements associated with the applicability determinations. Paragraphs (f)(9) and (f)(10) describe criteria for removing the EPPU designation from a process unit.

(1) *Initial determination.* The owner or operator shall initially determine if a process unit is subject to the provisions of this subpart based on the primary product of the process unit in accordance with paragraphs (f)(1)(i) through (iii) of this section. If the process unit never uses or manufactures any organic HAP, regardless of the outcome of the primary product determination, the only requirements of this subpart that might apply to the process unit are contained in paragraph (b) of this section. If a flexible operation unit does not use or manufacture any organic HAP during the manufacture of one or more products, paragraph (f)(5)(i) of this section applies to that flexible operation unit.

(i) If a process unit only manufactures one product, then that product shall represent the primary product of the process unit.

(ii) If a process unit produces more than one intended product at the same time, the primary product shall be determined in accordance with paragraph (f)(1)(ii)(A) or (B) of this section.

(A) The product for which the process unit has the greatest annual design capacity on a mass basis shall represent the primary product of the process unit, or

(B) If a process unit has the same maximum annual design capacity on a

mass basis for two or more products, and if one of those products is an elastomer product, then the elastomer product shall represent the primary product of the process unit.

(iii) If a process unit is designed and operated as a flexible operation unit, the primary product shall be determined as specified in paragraphs (f)(1)(iii)(A) or (B) of this section based on the anticipated operations for the 5 years following September 5, 1996 at existing process units, or for the first year after the process unit begins production of any product for new process units. If operations cannot be anticipated sufficiently to allow the determination of the primary product for the specified period, applicability shall be determined in accordance with paragraph (f)(2) of this section.

(A) If the flexible operation unit will manufacture one product for the greatest operating time over the specified five year period for existing process units, or the specified one year period for new process units, then that product shall represent the primary product of the flexible operation unit.

(B) If the flexible operation unit will manufacture multiple products equally based on operating time, then the product with the greatest expected production on a mass basis over the specified five year period for existing process units, or the specified one year period for new process units shall represent the primary product of the flexible operation unit.

(iv) If, according to paragraph (f)(1)(i), (ii), or (iii) of this section, the primary product of a process unit is an elastomer product, then that process unit shall be designated as an EPPU. That EPPU and associated equipment, as listed in paragraph (a)(4) of this section, is either an affected source, or part of an affected source comprised of other EPPU and associated equipment, as listed in paragraph (a)(4) of this section, subject to this subpart with the same primary product at the same plant site that is a major source. If the primary product of a process unit is determined to be a product that is not an elastomer product, then that process unit is not an EPPU.

(2) If the primary product cannot be determined for a flexible operation unit in accordance with paragraph (f)(1)(iii) of this section, applicability shall be determined in accordance with this paragraph.

(i) If the owner or operator cannot determine the primary product in accordance with paragraph (f)(1)(iii) of this section, but can determine that an elastomer product is not the primary product, then that flexible operation unit is not an EPPU.

(ii) If the owner or operator cannot determine the primary product in accordance with paragraph (f)(1)(iii) of this section, and cannot determine that an elastomer product is not the primary product as specified in paragraph (f)(2)(i) of this section, applicability shall be determined in accordance with paragraph (f)(2)(ii)(A) or (f)(2)(ii)(B) of this section.

(A) If the flexible operation unit is an existing process unit, the flexible operation unit shall be designated as an EPPU if an elastomer product was produced for 5 percent or greater of the total operating time of the flexible operation unit since March 9, 1999. That EPPU and associated equipment, as listed in paragraph (a)(4) of this section, is either an affected source, or part of an affected source comprised of other EPPU and associated equipment, as listed in paragraph (a)(4) of this section, subject to this subpart with the same primary product at the same plant site that is a major source. For a flexible operation unit that is designated as an EPPU in accordance with this paragraph, the elastomer product produced for the greatest amount of time since March 9, 1999 shall be designated as the primary product of the EPPU.

(B) If the flexible operation unit is a new process unit, the flexible operation unit shall be designated as an EPPU if the owner or operator anticipates that an elastomer product will be manufactured in the flexible operation unit at any time in the first year after the date the unit begins production of any product. That EPPU and associated equipment, as listed in paragraph (a)(4) of this section, is either an affected source, or part of an affected source comprised of other EPPU and associated equipment, as listed in paragraph (a)(4) of this section, subject to this subpart with the same primary product at the same plant site that is a major source. For a process unit that is designated as an EPPU in accordance with this paragraph, the elastomer product that will be produced shall be designated as the primary product of the EPPU. If more than one elastomer product will be produced, the owner or operator may select which elastomer product is designated as the primary product.

(3) *Annual applicability determination for non-EPPUs that have produced an elastomer product.* Once per year beginning September 5, 2001, the owner or operator of each flexible operation unit that is not designated as an EPPU, but that has produced an elastomer product at any time in the preceding five-year period or since the date that the unit began production of any product, whichever is shorter, shall perform the evaluation described in paragraphs (f)(3)(i) through (f)(3)(iii) of this section. However, an owner or operator that does not intend to produce any elastomer product in the future, in accordance with paragraph (f)(9) of this section, is not required to perform the evaluation described in paragraphs (f)(3)(i) through (f)(3)(iii) of this section.

(i) For each product produced in the flexible operation unit, the owner or operator shall calculate the percentage of total operating time over which the product was produced during the preceding five-year period.

(ii) The owner or operator shall identify the primary product as the product with the highest percentage of total operating time for the preceding five-year period.

(iii) If the primary product identified in paragraph (f)(3)(ii) is an elastomer product, the flexible operation unit shall be designated as an EPPU. The owner or operator shall notify the Administrator no later than 45 days after determining that the flexible operation unit is an EPPU, and shall comply with the requirements of this subpart in accordance with paragraph (i)(1) of this section for the flexible operation unit.

(4) *Applicability determination for non-EPPUs that have not produced an elastomer product.* The owner or operator that anticipates the production of an elastomer product in a process unit that is not designated as an EPPU, and in which no elastomer products have been produced in the previous 5 year period or since the date that the process unit began production of any product, whichever is shorter, shall determine if the process unit is subject to this subpart in accordance with paragraphs (f)(4)(i) and (ii) of this section. Also, owners or operators who have notified the Administrator that a process unit is not an EPPU in accordance with paragraph (f)(9) of this section, that now anticipate the production of an elastomer product in the process unit, shall determine if the process unit is subject to this subpart in accordance with paragraphs (f)(4)(i) and (ii) of this section.

(i) The owner or operator shall use the procedures in paragraph (f)(1) or (f)(2) of this section to determine if the process unit is designated as an EPPU, with the following exception: for existing process units that are determining the primary product in accordance with paragraph (f)(1)(iii) of this section, production shall be projected for the five years following the date that the owner or

operator anticipates initiating the production of an elastomer product.

(ii) If the unit is designated as an EPPU in accordance with paragraph (f)(4)(i) of this section, the owner or operator shall comply in accordance with paragraph (i)(1) of this section.

(5) *Compliance for flexible operation units.* Owners or operators of EPPUs that are flexible operation units shall comply with the standards specified for the primary product, with the exceptions provided in paragraphs (f)(5)(i) and (f)(5)(ii) of this section.

(i) Whenever a flexible operation unit manufactures a product in which no organic HAP is used or manufactured, the owner or operator is only required to comply with either paragraph (b)(1) or (b)(2) of this section to demonstrate compliance for activities associated with the manufacture of that product. This subpart does not require compliance with the provisions of subpart A of this part for activities associated with the manufacture of a product that meets the criteria of paragraph (b) of this section.

(ii) Whenever a flexible operation unit manufactures a product that makes it subject to subpart GGG of this part, the owner or operator is not required to comply with the provisions of this subpart during the production of that product.

(6) Owners or operators of EPPUs that are flexible operation units have the option of determining the group status of each emission point associated with the flexible operation unit, in accordance with either paragraph (f)(6)(i) or (f)(6)(ii) of this section, with the exception of batch front-end process vents. For batch front-end process vents, the owner or operator shall determine the group status in accordance with § 63.488.

(i) The owner or operator may determine the group status of each emission point based on emission point characteristics when the primary product is being manufactured.

(ii) The owner or operator may determine the group status of each emission point separately for each product produced by the flexible operation unit. For each product, the group status shall be determined using the emission point characteristics when that product is being manufactured and using the Group 1 criteria specified for the primary product. (Note: Under this scenario, it is possible that the group status, and therefore the requirement to achieve emission reductions, for an emission point may change depending on the product being manufactured.)

(7) Owners or operators determining the group status of emission points in flexible operation units based solely on the primary product in accordance with paragraph (f)(6)(i) of this section shall establish parameter monitoring levels, as required, in accordance with either paragraph (f)(7)(i) or (f)(7)(ii) of this section. Owners or operators determining the group status of emission points in flexible operation units based on each product in accordance with paragraph (f)(6)(ii) of this section shall establish parameter monitoring levels, as required, in accordance with paragraph (f)(7)(i) of this section.

(i) Establish separate parameter monitoring levels in accordance with § 63.505(a) for each individual product.

(ii) Establish a single parameter monitoring level (for each parameter required to be monitored at each device subject to monitoring requirements) in accordance with § 63.505(a) that would apply for all products.

(8) *Reporting requirements.* When it is determined that a process unit is an EPPU and subject to the requirements of this subpart, the Notification of Compliance Status required by § 63.506(e)(5) shall include the information specified in paragraphs (f)(8)(i) and (f)(8)(ii) of this section, as applicable. If it is determined that the process unit is not subject to this subpart, the owner or operator shall either retain all information, data, and analysis used to document the basis for the determination that the primary product is not an elastomer product, or, when requested by the Administrator, demonstrate that the process unit is not subject to this subpart.

(i) If the EPPU manufactures only one elastomer product, identification of that elastomer product.

(ii) If the EPPU is designed and operated as a flexible operation unit, the information specified in paragraphs (f)(8)(ii)(A) through (f)(8)(ii)(D) of this section, as appropriate, shall be submitted.

(A) If a primary product could be determined, identification of the primary product.

(B) Identification of which compliance option, either paragraph (f)(6)(i) or (f)(6)(ii) of this section, has been selected by the owner or operator.

(C) If the option to establish separate parameter monitoring levels for each product in paragraph (f)(7)(i) of this section is selected, the identification of each product and the corresponding parameter monitoring level.

(D) If the option to establish a single parameter monitor level in paragraph (f)(7)(ii) of this section is selected, the parameter monitoring level for each parameter.

(9) *EPPUs terminating production of all elastomer products.* If an EPPU terminates the production of all elastomer products and does not anticipate the production of any elastomer products in the future, the process unit is no longer an EPPU and is not subject to this subpart after notification is made to the Administrator. This notification shall be accompanied by a rationale for why it is anticipated that no elastomer products will be produced in the process unit in the future.

(10) *Redetermination of applicability to EPPUs that are flexible operation units.* Whenever changes in production occur that could reasonably be expected to change the primary product of an EPPU that is operating as a flexible operation unit from an elastomer product to a product that would make the process unit subject to another subpart of this part, the owner or operator shall re-evaluate the status of the process unit as an EPPU in accordance with paragraphs (f)(10)(i) through (iii) of this section.

(i) For each product produced in the flexible operation unit, the owner or operator shall calculate the percentage of total operating time in which the product was produced for the preceding five-year period, or since the date that the process unit began production of any product, whichever is shorter.

(ii) The owner or operator shall identify the primary product as the product with the highest percentage of total operating time for the period.

(iii) If the conditions in (f)(10)(iii)(A) through (C) of this section are met, the flexible operation unit shall no longer be designated as an EPPU after the compliance date of the other subpart and shall no longer be subject to the provisions of this subpart after the date that the process unit is required to be in compliance with the provisions of the other subpart of this part to which it is subject. If the conditions in paragraphs (f)(10)(iii)(A) through (C) of this section are not met, the flexible operation unit shall continue to be considered an EPPU and subject to the requirements of this subpart.

(A) The product identified in (f)(10)(ii) of this section is not an elastomer product; and

(B) The production of the product identified in (f)(10)(ii) of this section is subject to another subpart of this part; and

(C) The owner or operator submits a notification to the Administrator of the pending change in applicability.

(g) *Storage vessel ownership determination.* The owner or operator shall follow the procedures specified in

paragraphs (g)(1) through (g)(7) of this section to determine to which process unit a storage vessel shall be assigned. Paragraph (g)(8) of this section specifies when an owner or operator is required to redetermine to which process unit a storage vessel is assigned.

(1) If a storage vessel is already subject to another subpart of 40 CFR part 63 on September 5, 1996, that storage vessel shall be assigned to the process unit subject to the other subpart.

(2) If a storage vessel is dedicated to a single process unit, the storage vessel shall be assigned to that process unit.

(3) If a storage vessel is shared among process units, then the storage vessel shall be assigned to that process unit located on the same plant site as the storage vessel that has the greatest input into or output from the storage vessel (*i.e.*, the process unit that has the predominant use of the storage vessel.)

(4) If predominant use cannot be determined for a storage vessel that is shared among process units and if only one of those process units is an EPPU subject to this subpart, the storage vessel shall be assigned to that EPPU.

* * * * *

(6) If the predominant use of a storage vessel varies from year to year, then predominant use shall be determined based on the utilization that occurred during the year preceding September 5, 1996 or based on the expected utilization for the 5 years following September 5, 1996, whichever is more representative of the expected operations for that storage vessel for existing affected sources, and based on the expected utilization for the first 5 years after initial start-up for new affected sources. The determination of predominant use shall be reported in the Notification of Compliance Status, as required by § 63.506(e)(5)(vii).

(7) Where a storage vessel is located at a major source that includes one or more process units which place material into, or receive materials from the storage vessel, but the storage vessel is located in a tank farm (including a marine tank farm), the applicability of this subpart shall be determined according to the provisions in paragraphs (g)(7)(i) through (g)(7)(iv) of this section.

(i) The storage vessel may only be assigned to a process unit that utilizes the storage vessel and does not have an intervening storage vessel for that product (or raw material, as appropriate). With respect to any process unit, an intervening storage vessel means a storage vessel connected by hard-piping both to the process unit and to the storage vessel in the tank farm so that product or raw material entering or leaving the process unit flows into (or from) the intervening storage vessel and does not flow directly into (or from) the storage vessel in the tank farm.

(ii) If there is no process unit at the major source that meets the criteria of paragraph (g)(7)(i) of this section with respect to a storage vessel, this subpart does not apply to the storage vessel.

(iii) If there is only one process unit at the major source that meets the criteria of paragraph (g)(7)(i) of this section with respect to a storage vessel, the storage vessel shall be assigned to that process unit. Applicability of this subpart to the storage vessel shall then be determined according to the provisions of paragraph (a) of this section.

(iv) If there are two or more process units at the major source that meet the criteria of paragraph (g)(7)(i) of this section with respect to a storage vessel, the storage vessel shall be assigned to one of those process units according to the provisions of paragraphs (g)(3) through (g)(6) of this section. The predominant use shall be determined among only those process units that meet the criteria of paragraph (g)(7)(i) of this section.

(8) If the storage vessel begins receiving material from (or sending material to) a process unit that was not included in the initial determination, or ceases to receive material from (or send material to) a process unit that was included in the initial determination, the owner or operator shall reevaluate the applicability of this subpart to that storage vessel.

(h) *Recovery operations equipment ownership determination.* The owner or operator shall follow the procedures specified in paragraphs (h)(1) through (h)(6) of this section to determine to which process unit recovery operations equipment shall be assigned. Paragraph (h)(7) of this section specifies when an owner or operator is required to redetermine to which process unit the recovery operations equipment is assigned.

(1) If recovery operations equipment is already subject to another subpart of 40 CFR part 63 on September 5, 1996, that recovery operations equipment shall be assigned to the process unit subject to the other subpart.

(2) If recovery operations equipment is dedicated to a single process unit, the recovery operations equipment shall be assigned to that process unit.

(3) If recovery operations equipment is shared among process units, then the recovery operations equipment shall be assigned to that process unit located on the same plant site as the recovery operations equipment that has the greatest input into or output from the recovery operations equipment (*i.e.*, that process unit has the predominant use of the recovery operations equipment).

(4) If predominant use cannot be determined for recovery operations equipment that is shared among process units and if one of those process units is an EPPU subject to this subpart, the recovery operations equipment shall be assigned to the EPPU subject to this subpart.

* * * * *

(6) If the predominant use of recovery operations equipment varies from year to year, then the predominant use shall be determined based on the utilization that occurred during the year preceding September 5, 1996 for existing affected sources or based on the expected utilization for the 5 years following September 5, 1996 for existing affected sources, whichever is the more representative of the expected operations for the recovery operations equipment, and based on the expected utilization for the first 5 years after initial start-up for new affected sources. The determination of predominant use shall be reported in the Notification of Compliance Status, as required by § 63.506(e)(5)(viii).

(7) If a piece of recovery operations equipment begins receiving material from a process unit that was not included in the initial determination, or ceases to receive material from a process unit that was included in the initial determination, the owner or operator shall reevaluate the applicability of this subpart to that recovery operations equipment.

(i) *Changes or additions to plant sites.* The provisions of paragraphs (i)(1) through (i)(4) of this section apply to owners or operators that change or add to their plant site or affected source. Paragraph (i)(5) provides examples of what are and are not considered process changes for purposes of paragraph (i) of this section. Paragraph (i)(6) of this section discusses reporting requirements.

(1) *Adding an EPPU to a plant site.* The provisions of paragraphs (i)(1)(i) and (i)(1)(ii) of this section apply to owners or operators that add one or more EPPUs to a plant site.

(i) If a group of one or more EPPUs that produce the same primary product is added to a plant site, the added group of one or more EPPUs and associated equipment, as listed in paragraph (a)(4) of this section, shall be a new affected source and shall comply with the requirements for a new affected source

in this subpart upon initial start-up or by June 19, 2000, whichever is later, if the added group of one or more EPPUs meets the criteria in either paragraph (i)(1)(i)(A) or (i)(1)(i)(B) of this section, and if the criteria in either paragraph (i)(1)(i)(C) or (i)(1)(i)(D) of this section are met.

(A) The construction of the group of one or more EPPUs commenced after June 12, 1995.

(B) The construction or reconstruction, for process units that have become EPPUs, commenced after June 12, 1995.

(C) The group of one or more EPPUs and associated equipment, as listed in paragraph (a)(4) of this section, has the potential to emit 10 tons per year or more of any HAP or 25 tons per year or more of any combination of HAP, and the primary product of the group of one or more EPPUs is currently produced at the plant site as the primary product of an affected source; or

(D) The primary product of the group of one or more EPPUs is not currently produced at the plant site as the primary product of an affected source, and the plant site meets, or after the addition of the group of one or more EPPUs and associated equipment, as listed in paragraph (a)(4) of this section, will meet the definition of a major source.

(ii) If a group of one or more EPPUs that produce the same primary product is added to a plant site, and the group of one or more EPPUs does not meet the criteria specified in paragraph (i)(1)(i) of this section, and the plant site meets, or after the addition will meet, the definition of a major source, the group of one or more EPPUs and associated equipment, as listed in paragraph (a)(4) of this section, shall comply with the requirements for an existing affected source in this subpart upon initial start-up; by June 19, 2001; or by 6 months after notifying the Administrator that a process unit has been designated as an EPPU (in accordance with paragraph (f)(3)(iii) of this section), whichever is later.

(2) * * *

(i) If any components are replaced at an existing affected source such that the criteria specified in paragraphs (i)(2)(i)(A) through (i)(2)(i)(B) of this section are met, the entire affected source shall be a new affected source and shall comply with the requirements for a new affected source upon initial start-up or by June 19, 2000, whichever is later.

(A) The replacement of components meets the definition of reconstruction in § 63.482(b); and

* * * * *

(ii) If any components are replaced at an existing affected source such that the criteria specified in paragraphs (i)(2)(i)(A) and (i)(2)(i)(B) of this section are not met and that replacement of components creates one or more emission points (*i.e.*, either newly created Group 1 emission points or emission points that change from Group 2 to Group 1) or causes any other emission point to be added (*i.e.*, Group 2 emission points, back-end process operations subject to §§ 63.493 and 63.500, and heat exchange systems and equipment leak components subject § 63.502), the resulting emission point(s) shall be subject to the applicable requirements for an existing affected source. The resulting emission point(s) shall be in compliance upon initial start-up or by the appropriate compliance date specified in § 63.481 (*i.e.*, July 31, 1997 for most equipment leak components subject to § 63.502, and June 19, 2001 for emission points other than equipment leaks), whichever is later.

(iii) If an addition or process change (not including a process change that solely replaces components) is made that creates one or more Group 1 emission points (*i.e.*, either newly created Group 1 emission points or emission points that change group status from Group 2 to Group 1) or causes any other emission point to be added (i.e., Group 2 emission points, back-end process operations subject to §§ 63.493 through 63.500, and heat exchange systems and equipment leak components subject to § 63.502), the resulting emission point(s) shall be subject to the applicable requirements for an existing affected source. The resulting emission point(s) shall be in compliance by 120 days after the date of initial start-up or by the appropriate compliance date specified in § 63.481 (i.e., July 31, 1997 for most equipment leak components subject to § 63.502, and June 19, 2001 for emission points other than equipment leaks), whichever is later.

(3) *Existing affected source requirements for surge control vessels and bottoms receivers that become subject to subpart H requirements.* If a process change or the addition of an emission point causes a surge control vessel or bottoms receiver to become subject to § 63.170 under this paragraph (i), the owner or operator shall be in compliance upon initial start-up or by June 19, 2001, whichever is later.

(4) *Existing affected source requirements for compressors that become subject to subpart H requirements.* If a process change or the addition of an emission point causes a compressor to become subject to § 63.164 under this paragraph (i), the owner or operator shall be in compliance upon initial start-up or by the compliance date for that compressor, as specified in § 63.481(d), whichever is later.

(5) *Determining what are and are not process changes.* For purposes of paragraph (i) of this section, examples of process changes include, but are not limited to, changes in feedstock type or process catalyst type, or whenever the replacement, removal, or addition of recovery equipment, or equipment changes that increase production capacity. For purposes of paragraph (i) of this section, process changes do not include: process upsets, unintentional temporary process changes, and changes that do not alter the equipment configuration and operating conditions.

(6) *Reporting requirements for owners or operators that change or add to their plant site or affected source.* Owners or operators that change or add to their plant site or affected source, as discussed in paragraphs (i)(1) and (i)(2) of this section, shall submit a report as specified in § 63.506(e)(7)(v).

(j) *Applicability of this subpart during periods of start-up, shutdown, malfunction, or non-operation.* Paragraphs (j)(1) through (j)(4) of this section shall be followed during periods of start-up, shutdown, malfunction, or non-operation of the affected source or any part thereof.

(1) The emission limitations set forth in this subpart and the emission limitations referred to in this subpart shall apply at all times except during periods of non-operation of the affected source (or specific portion thereof) resulting in cessation of the emissions to which this subpart applies. The emission limitations of this subpart and the emission limitations referred to in this subpart shall not apply during periods of start-up, shutdown, or malfunction, except as provided in paragraphs (j)(3) and (j)(4) of this section. During periods of start-up, shutdown, or malfunction, the owner or operator shall follow the applicable provisions of the start-up, shutdown, and malfunction plan required by § 63.506(b)(1). However, if a start-up, shutdown, malfunction, or period of non-operation of one portion of an affected source does not affect the ability of a particular emission point to comply with the emission limitations to which it is subject, then that emission point shall still be required to comply with the applicable emission limitations of this subpart during the start-up, shutdown, malfunction, or period of non-operation. For example, if there is

an overpressure in the reactor area, a storage vessel that is part of the affected source would still be required to be controlled in accordance with the emission limitations in § 63.484. Similarly, the degassing of a storage vessel would not affect the ability of a batch front-end process vent to meet the emission limitations of §§ 63.486 through 63.492.

(2) The emission limitations set forth in subpart H of this part, as referred to in § 63.502, shall apply at all times except during periods of non-operation of the affected source (or specific portion thereof) in which the lines are drained and depressurized resulting in cessation of the emissions to which § 63.502 applies, or during periods of start-up, shutdown, malfunction, or process unit shutdown (as defined in § 63.161).

(3) The owner or operator shall not shut down items of equipment that are required or utilized for compliance with this subpart during periods of start-up, shutdown, or malfunction during times when emissions (or, where applicable, wastewater streams or residuals) are being routed to such items of equipment if the shutdown would contravene requirements of this subpart applicable to such items of equipment. This paragraph does not apply if the item of equipment is malfunctioning. This paragraph also does not apply if the owner or operator shuts down the compliance equipment (other than monitoring systems) to avoid damage due to a contemporaneous start-up, shutdown, or malfunction of the affected source or portion thereof. If the owner or operator has reason to believe that monitoring equipment would be damaged due to a contemporaneous start-up, shutdown, or malfunction of the affected source or portion thereof, the owner or operator shall provide documentation supporting such a claim in the Precompliance Report or in a supplement to the Precompliance Report, as provided for in § 63.506(e)(3). Once approved by the Administrator in accordance with § 63.506(e)(3)(viii), the provision for ceasing to collect, during a start-up, shutdown, or malfunction, monitoring data that would otherwise be required by the provisions of this subpart must be incorporated into the start-up, shutdown, malfunction plan for that affected source, as stated in § 63.506(b)(1).

(4) During start-ups, shutdowns, and malfunctions when the emission limitations of this subpart do not apply pursuant to paragraphs (j)(1) through (j)(3) of this section, the owner or operator shall implement, to the extent reasonably available, measures to prevent or minimize excess emissions to the extent practical. For purposes of this paragraph, the term "excess emissions" means emissions greater than those allowed by the emissions limitation which would apply during operational periods other than start-up, shutdown, and malfunction. The measures to be taken shall be identified in the applicable start-up, shutdown, and malfunction plan, and may include, but are not limited to, air pollution control technologies, recovery technologies, work practices, pollution prevention, monitoring, and/or changes in the manner of operation of the affected source. Back-up control devices are not required, but may be used if available.

3. Section 63.481 is amended by:

a. Revising the section title;

b. Revising paragraph (a);

c. Revising paragraph (b);

d. Revising paragraph (c);

e. Revising paragraphs (d) introductory text; (d)(1) introductory text and (d)(2) introductory text;

f. Revising paragraphs (d)(2)(i), (d)(2)(ii), and (d)(2)(iv);

i. Revising paragraph (d)(3);

j. Revising paragraph (d)(4) introductory text;

k. Revising paragraph (d)(5);

l. Revising paragraph (d)(6);

m. Revising paragraph (e);

n. Revising paragraph (h)(2);

o. Revising paragraph (i);

p. Revising paragraph (j); and

q. Adding paragraphs (k), (l), and (m).

The revisions and additions read as follows:

§ 63.481 Compliance dates and relationship of this subpart to existing applicable rules.

(a) Affected sources are required to achieve compliance on or before the dates specified in paragraphs (b) through (d) of this section. Paragraph (e) of this section provides information on requesting compliance extensions. Paragraphs (f) through (l) of this section discuss the relationship of this subpart to subpart A and to other applicable rules. Where an override of another authority of the Act is indicated in this subpart, only compliance with the provisions of this subpart is required. Paragraph (m) of this section specifies the meaning of time periods.

(b) New affected sources that commence construction or reconstruction after June 12, 1995 shall be in compliance with this subpart upon initial start-up or by June 19, 2000, whichever is later.

(c) Existing affected sources shall be in compliance with this subpart (except for § 63.502 for which compliance is covered by paragraph (d) of this section) no later than June 19, 2001, as provided in § 63.6(c), unless an extension has been granted as specified in paragraph (e) of this section.

(d) Except as provided for in paragraphs (d)(1) through (d)(6) of this section, existing affected sources shall be in compliance with § 63.502 no later than July 31, 1997, unless an extension has been granted pursuant to paragraph (e) of this section.

(1) Compliance with the compressor provisions of § 63.164 shall occur no later than September 5, 1997 for any compressor meeting one or more of the criteria in paragraphs (d)(1)(i) through (d)(1)(iv) of this section, if the work can be accomplished without a process unit shutdown, as defined in § 63.161.

* * * * *

(2) Compliance with the compressor provisions of § 63.164 shall occur no later than March 5, 1998, for any compressor meeting all the criteria in paragraphs (d)(2)(i) through (d)(2)(iv) of this section.

(i) The compressor meets one or more of the criteria specified in paragraphs (d)(1)(i) through (d)(1)(iv) of this section;

(ii) The work can be accomplished without a process unit shutdown as defined in § 63.161;

* * * * *

(iv) The owner or operator submits the request for a compliance extension to the appropriate U.S. Environmental Protection Agency (EPA) Regional Office at the address listed in § 63.13 no later than 45 days before the compliance date. The request for a compliance extension shall contain the information specified in § 63.6(i)(6)(i)(A), (B), and (D). Unless the EPA Regional Office objects to the request for a compliance extension within 30 days after receipt of the request, the request shall be deemed approved.

(3) If compliance with the compressor provisions of § 63.164 cannot reasonably be achieved without a process unit shutdown, the owner or operator shall achieve compliance no later than September 5, 1998. The owner or operator who elects to use this provision shall submit a request for an extension of compliance in accordance with the requirements of paragraph (d)(2)(iv) of this section.

(4) Compliance with the compressor provisions of § 63.164 shall occur no later than September 5, 1999 for any compressor meeting one or more of the criteria in paragraphs (d)(4)(i) through (d)(4)(iii) of this section. The owner or operator who elects to use these provisions shall submit a request for an extension of compliance in accordance

with the requirements of paragraph (d)(2)(iv) of this section.

* * * * *

(5) Compliance with the surge control vessel and bottoms receiver provisions of § 63.170 shall occur no later than June 19, 2001.

(6) Compliance with the heat exchange system provisions of § 63.104 shall occur no later than June 19, 2001.

(e) Pursuant to section 112(i)(3)(B) of the Act, an owner or operator may request an extension allowing the existing affected source up to 1 additional year to comply with section 112(d) standards. For purposes of this subpart, a request for an extension shall be submitted to the permitting authority as part of the operating permit application, or to the Administrator as a separate submittal or as part of the Precompliance Report. Requests for extensions shall be submitted no later than 120 days prior to the compliance dates specified in paragraphs (b) through (d) of this section, or as specified elsewhere in this subpart, except as provided in paragraph (e)(3) of this section. The dates specified in § 63.6(i) for submittal of requests for extensions shall not apply to this subpart.

(1) A request for an extension of compliance shall include the data described in § 63.6(i)(6)(i)(A), (B), and (D).

(2) The requirements in §§ 63.6(i)(8) through 63.6(i)(14) shall govern the review and approval of requests for extensions of compliance with this subpart.

(3) An owner or operator may submit a compliance extension request after the date specified in paragraph (e) of this section, provided that the need for the compliance extension arose after that date, and the need arose due to circumstances beyond reasonable control of the owner or operator. This request shall include, in addition to the information specified in paragraph (e)(1) of this section, a statement of the reasons additional time is needed and the date when the owner or operator first learned of the circumstances necessitating a request for a compliance extension under this paragraph (e)(3).

* * * * *

(h) * * *

(2) Sources subject to 40 CFR part 63, subpart I that have elected to comply through a quality improvement program, as specified in § 63.175 or § 63.176 or both, may elect to continue these programs without interruption as a means of complying with this subpart. In other words, becoming subject to this subpart does not restart or reset the "compliance clock" as it relates to reduced burden earned through a quality improvement program.

(i) After the compliance dates specified in this section, a storage vessel that is assigned to an affected source subject to this subpart and that is also subject to the provisions of 40 CFR part 60, subpart Kb is required to comply only with the provisions of this subpart. After the compliance dates specified in this section, that storage vessel shall no longer be subject to 40 CFR part 60, subpart Kb.

(j) After the compliance dates specified in this section, an affected source subject to this subpart that is also subject to the provisions of 40 CFR part 60, subpart VV, is required to comply only with the provisions of this subpart. After the compliance dates specified in this section, the source shall no longer be subject to 40 CFR part 60, subpart VV.

(k) *Applicability of other regulations for monitoring, recordkeeping or reporting with respect to combustion devices, recovery devices, or recapture devices.* After the compliance dates specified in this subpart, if any combustion device, recovery device or recapture device subject to this subpart is also subject to monitoring, recordkeeping, and reporting requirements in 40 CFR part 264 subpart AA or CC, or is subject to monitoring and recordkeeping requirements in 40 CFR part 265 subpart AA or CC and the owner or operator complies with the periodic reporting requirements under 40 CFR part 264 subpart AA or CC that would apply to the device if the facility had final-permitted status, the owner or operator may elect to comply either with the monitoring, recordkeeping and reporting requirements of this subpart, or with the monitoring, recordkeeping and reporting requirements in 40 CFR parts 264 and/or 265, as described in this paragraph, which shall constitute compliance with the monitoring, recordkeeping and reporting requirements of this subpart. The owner or operator shall identify which option has been selected in the Notification of Compliance Status required by § 63.506(e)(5).

(l) *Applicability of other requirements for heat exchange systems or waste management units.* Paragraphs (l)(1) and (l)(2) of this section address instances in which certain requirements from other regulations also apply for the same heat exchange system(s) or waste management unit(s) that are subject to this subpart.

(1) After the applicable compliance date specified in this subpart, if a heat exchange system subject to this subpart is also subject to a standard identified in paragraphs (l)(1)(i) or (ii) of this section, compliance with the applicable provisions of the standard identified in paragraphs (l)(1)(i) or (ii) of this section shall constitute compliance with the applicable provisions of this subpart with respect to that heat exchange system.

(i) Subpart F of this part.

(ii) A subpart of this part which requires compliance with § 63.104 (*e.g.*, subpart JJJ of this part).

(2) After the applicable compliance date specified in this subpart, if any waste management unit subject to this subpart is also subject to a standard identified in paragraph (l)(2)(i) or (ii) of this section, compliance with the applicable provisions of the standard identified in paragraph (l)(2)(i) or (ii) of this section shall constitute compliance with the applicable provisions of this subpart with respect to that waste management unit.

(i) Subpart G of this part.

(ii) A subpart of this part which requires compliance with §§ 63.132 through 63.147 (*e.g.*, subpart JJJ of this part).

(m) All terms in this subpart that define a period of time for completion of required tasks (*e.g.*, monthly, quarterly, annual), unless specified otherwise in the section or paragraph that imposes the requirement, refer to the standard calendar periods.

(1) Notwithstanding time periods specified in this subpart for completion of required tasks, such time periods may be changed by mutual agreement between the owner or operator and the Administrator, as specified in subpart A of this part (*e.g.*, a period could begin on the compliance date or another date, rather than on the first day of the standard calendar period). For each time period that is changed by agreement, the revised period shall remain in effect until it is changed. A new request is not necessary for each recurring period.

(2) Where the period specified for compliance is a standard calendar period, if the initial compliance date occurs after the beginning of the period, compliance shall be required according to the schedule specified in paragraphs (m)(2)(i) or (m)(2)(ii) of this section, as appropriate.

(i) Compliance shall be required before the end of the standard calendar period within which the compliance deadline occurs, if there remain at least 2 weeks for tasks that shall be performed monthly, at least 1 month for tasks that shall be performed each quarter, or at least 3 months for tasks that shall be performed annually; or

(ii) In all other cases, compliance shall be required before the end of the first full standard calendar period after the period within which the initial compliance deadline occurs.

(3) In all instances where a provision of this subpart requires completion of a task during each of multiple successive periods, an owner or operator may perform the required task at any time during the specified period, provided that the task is conducted at a reasonable interval after completion of the task during the previous period.

4. Section 63.482 is amended by:

a. Revising paragraph (a);

b. Amending paragraph (b) by revising the definitions for "Aggregate batch vent stream," "Batch front-end process vent," "Batch process," "Batch unit operation," "Compounding unit," "Continuous front-end process vent," "Continuous process," "Continuous unit operation," "Control device," "Elastomer product," "Elastomer product process unit (EPPU)," "Elastomer type," "Emission point," "Emulsion process," "Epichlorohydrin elastomer," "Ethylene-propylene rubber," "Front-end," "Grade," "Group 1 batch front-end process vent," "Group 1 continuous front-end process vent," "Group 2 continuous front-end process vent," "Group 1 wastewater stream," "Halogenated continuous front-end process vent," "Nitrile butadiene rubber," "Organic hazardous air pollutant(s) (organic HAP)," "Process unit," "Process vent," "Product," "Recovery operations equipment," "Resin," "Steady-state conditions," "Storage vessel," "Supplemental combustion air," "Suspension process," and "Total organic compounds (TOC)";

c. Amending paragraph (b) by removing the definitions of "Average flow rate," "Batch cycle limitation," "Mass process," "Material recovery section," "Month," "Polybutadiene rubber/styrene butadiene rubber by solution," "Polymerization reaction section," "Raw materials preparation section," "Solid state polymerization unit," "Stripping Technology," and "Year,"; and

d. Amending paragraph (b) by adding definitions for the terms "Annual average batch vent concentration," "Annual average batch vent flow rate," "Annual average concentration," "Annual average flow rate," "Average batch vent concentration," "Average batch vent flow rate", "Batch mass input limitation," "Batch mode," "Block polymer," "Combined vent stream," "Construction," "Continuous mode," "Continuous record," "Continuous recorder," "Equipment," "Existing affected source," "Existing process unit," "Flexible operation unit," "Glass transition temperature," "Highest-HAP recipe," "Initial start-up," "Maintenance wastewater," "Maximum true vapor pressure," "Multicomponent system," "New process unit," "On-site or on site," "Operating day," "Polybutadiene rubber by solution," "Recipe," "Reconstruction," "Recovery device," "Residual," "Shutdown," "Start-up," "Stripper," "Stripping," "Styrene butadiene rubber by solution," "Total resource effectiveness index value or TRE index value," "Vent stream," "Waste management unit," "Wastewater," and "Wastewater stream."

The revisions and additions read as follows:

§ 63.482 Definitions.

(a) The following terms used in this subpart shall have the meaning given them in § 63.2, § 63.101, § 63.111, § 63.161, or the Act, as specified after each term:

Act (§ 63.2)
Administrator (§ 63.2)
Automated monitoring and recording system (§ 63.111)
Boiler (§ 63.111)
Bottoms receiver (§ 63.161)
By compound (§ 63.111)
By-product (§ 63.101)
Car-seal (§ 63.111)
Closed-vent system (§ 63.111)
Combustion device (§ 63.111)
Commenced (§ 63.2)
Compliance date (§ 63.2)
Connector (§ 63.161)
Continuous monitoring system (§ 63.2)
Distillation unit (§ 63.111)
Duct work (§ 63.161)
Emission limitation (Section 302(k) of the Act)
Emission standard (§ 63.2)
Emissions averaging (§ 63.2)
EPA (§ 63.2)
Equipment leak (§ 63.101)
External floating roof (§ 63.111)
Fill or filling (§ 63.111)
Fixed capital cost (§ 63.2)
Flame zone (§ 63.111)
Floating roof (§ 63.111)
Flow indicator (§ 63.111)
Fuel gas system (§ 63.101)
Halogens and hydrogen halides (§ 63.111)
Hard-piping (§ 63.111)
Hazardous air pollutant (§ 63.2)
Heat exchange system (§ 63.101)
Impurity (§ 63.101)
Incinerator (§ 63.111)
In organic hazardous air pollutant service or in organic HAP service (§ 63.161)
Instrumentation system (§ 63.161)
Internal floating roof (§ 63.111)
Lesser quantity (§ 63.2)
Major source (§ 63.2)
Malfunction (§ 63.2)
Oil-water separator or organic-water separator (§ 63.111)
Open-ended valve or line (§ 63.161)
Operating permit (§ 63.101)
Organic monitoring device (§ 63.111)
Owner or operator (§ 63.2)
Performance evaluation (§ 63.2)
Performance test (§ 63.2)
Permitting authority (§ 63.2)
Plant site (§ 63.101)
Potential to emit (§ 63.2)
Pressure release (§ 63.161)
Primary fuel (§ 63.111)
Process heater (§ 63.111)
Process unit shutdown (§ 63.161)
Process wastewater (§ 63.101)
Process wastewater stream (§ 63.111)
Reactor (§ 63.111)
Recapture device (§ 63.101)
Repaired (§ 63.161)
Research and development facility (§ 63.101)
Routed to a process or route to a process (§ 63.161)
Run (§ 63.2)
Secondary fuel (§ 63.111)
Sensor (§ 63.161)
Specific gravity monitoring device (§ 63.111)
Start-up, shutdown, and malfunction plan (§ 63.101)
State (§ 63.2)
Stationary Source (§ 63.2)
Surge control vessel (§ 63.161)
Temperature monitoring device (§ 63.111)
Test method (§ 63.2)
Treatment process (§ 63.111)
Unit operation (§ 63.101)
Visible emission (§ 63.2)

(b) * * *

Aggregate batch vent stream means a gaseous emission stream containing only the exhausts from two or more batch front-end process vents that are ducted, hard-piped, or otherwise connected together for a continuous flow.

Annual average batch vent concentration is determined using Equation 17, as described in § 63.488(h)(2) for halogenated compounds.

Annual average batch vent flow rate is determined by the procedures in § 63.488(e)(3).

Annual average concentration, as used in the wastewater provisions, means the flow-weighted annual average concentration, as determined according to the procedures specified in § 63.144(b), with the exceptions noted in § 63.501, for the purposes of this subpart.

Annual average flow rate, as used in the wastewater provisions, means the

annual average flow rate, as determined according to the procedures specified in § 63.144(c), with the exceptions noted in § 63.501, for the purposes of this subpart.

Average batch vent concentration is determined by the procedures in § 63.488(b)(5)(iii) for HAP concentrations and is determined by the procedures in § 63.488(h)(1)(iii) for organic compounds containing halogens and hydrogen halides.

Average batch vent flow rate is determined by the procedures in § 63.488(e)(1) and (e)(2).

* * * * *

Batch front-end process vent means a process vent with annual organic HAP emissions greater than 225 kilograms per year from a batch unit operation within an affected source and located in the front-end of a process unit. Annual organic HAP emissions are determined as specified in § 63.488(b) at the location specified in § 63.488(a)(2).

Batch mass input limitation means an enforceable restriction on the total mass of HAP or material that can be input to a batch unit operation in one year.

Batch mode means the discontinuous bulk movement of material through a unit operation. Mass, temperature, concentration, and other properties may vary with time. For a unit operation operated in a batch mode (*i.e.*, batch unit operation), the addition of material and withdrawal of material do not typically occur simultaneously.

Batch process means, for the purposes of this subpart, a process where the reactor(s) is operated in a batch mode.

Batch unit operation means a unit operation operated in a batch mode.

Block polymer means a polymer where the polymerization is controlled, usually by performing discrete polymerization steps, such that the final polymer is arranged in a distinct pattern of repeating units of the same monomer.

* * * * *

Combined vent stream, as used in reference to batch front-end process vents, continuous front-end process vents, and aggregate batch vent streams, means the emissions from a combination of two or more of the aforementioned types of process vents. The primary occurrence of a combined vent stream is as combined emissions from a continuous front-end process vent and a batch front-end process vent.

* * * * *

Compounding unit means a unit operation which blends, melts, and resolidifies solid polymers for the purpose of incorporating additives, colorants, or stabilizers into the final elastomer product. A unit operation whose primary purpose is to remove residual monomers from polymers is not a compounding unit.

Construction means the on-site fabrication, erection, or installation of an affected source. Construction also means the on-site fabrication, erection, or installation of a process unit or combination of process units which subsequently becomes an affected source or part of an affected source, due to a change in primary product.

Continuous front-end process vent means a process vent located in the front-end of a process unit and containing greater than 0.005 weight percent total organic HAP from a continuous unit operation within an affected source. The total organic HAP weight percent is determined after the last recovery device, as described in § 63.115(a), and is determined as specified in § 63.115(c).

Continuous mode means the continuous movement of material through a unit operation. Mass, temperature, concentration, and other properties typically approach steady-state conditions. For a unit operation operated in a continuous mode (*i.e.*, continuous unit operation), the simultaneous addition of raw material and withdrawal of product is typical.

Continuous process means, for the purposes of this subpart, a process where the reactor(s) is operated in a continuous mode.

Continuous record means documentation, either in hard copy or computer readable form, of data values measured at least once every 15 minutes and recorded at the frequency specified in § 63.506(d) or (h).

Continuous recorder means a data recording device that either records an instantaneous data value at least once every 15 minutes or records 1—hour or more frequent block average values.

Continuous unit operation means a unit operation operated in a continuous mode.

Control device is defined in § 63.111, except that the term "continuous front-end process vent" shall apply instead of the term "process vent," for the purpose of this subpart.

* * * * *

Elastomer product means one of the following types of products, as they are defined in this section:

(1) Butyl Rubber;
(2) Halobutyl Rubber;
(3) Epichlorohydrin Elastomer;
(4) Ethylene Propylene Rubber;
(5) Hypalon™;
(6) Neoprene;
(7) Nitrile Butadiene Rubber;
(8) Nitrile Butadiene Latex;
(9) Polybutadiene Rubber/Styrene Butadiene Rubber by Solution;
(10) Polysulfide Rubber;
(11) Styrene Butadiene Rubber by Emulsion; and
(12) Styrene Butadiene Latex.

Elastomer product process unit (EPPU) means a collection of equipment assembled and connected by hard-piping or duct work, used to process raw materials and to manufacture an elastomer product as its primary product. This collection of equipment includes unit operations; recovery operations equipment; process vents; storage vessels, as determined in § 63.480(g); equipment that is identified in § 63.149; and the equipment that is subject to the equipment leak provisions as specified in § 63.502. Utilities, lines and equipment not containing process fluids, and other non-process lines, such as heating and cooling systems which do not combine their materials with those in the processes they serve, are not part of an elastomer product process unit. An elastomer product process unit consists of more than one unit operation.

Elastomer type means one of the elastomers listed under "elastomer product" in this section. Each elastomer identified in that definition represents a different elastomer type.

Emission point means an individual continuous front-end process vent, batch front-end process vent, back-end process vent, storage vessel, waste management unit, heat exchange system, or equipment leak, or equipment subject to § 63.149.

Emulsion process means a process where the monomer(s) is dispersed in droplets throughout a water phase, with the aid of an emulsifying agent such as soap or a synthetic emulsifier. The polymerization occurs either within the emulsion droplet or in the aqueous phase.

Epichlorohydrin elastomer means an elastomer formed from the polymerization or copolymerization of epichlorohydrin (EPI). The main epichlorohydrin elastomers are polyepichlorohydrin, epi-ethylene oxide (EO) copolymer, epi-allyl glycidyl ether (AGE) copolymer, and epi-EO-AGE terpolymer. Epoxies produced by the copolymerization of EPI and bisphenol A are not epichlorohydrin elastomers.

Equipment means, for the purposes of the provisions in § 63.502(a) through (m) and the requirements in subpart H that are referred to in § 63.502(a) through (m), each pump, compressor, agitator, pressure relief device, sampling connection system, open-ended valve or line, valve, connector, surge control vessel, bottoms receiver, and

instrumentation system in organic hazardous air pollutant service; and any control devices or systems required by subpart H of this part.

Ethylene-propylene rubber means an ethylene-propylene copolymer or an ethylene-propylene terpolymer. Ethylene-propylene copolymers (EPM) result from the polymerization of ethylene and propylene and contain a saturated chain of the polymethylene type. Ethylene-propylene terpolymers (EPDM) are produced in a similar manner as EPM, except that a third monomer is added to the reaction sequence. Typical third monomers include ethylidene norbornene, 1,4-hexadiene, or dicyclopentadiene. Ethylidene norbornene is the most commonly used. The production process includes, but is not limited to, polymerization, recycle, recovery, and packaging operations. The polymerization reaction may occur in either a solution process or a suspension process.

Existing affected source is defined in § 63.480(a)(3).

Existing process unit means any process unit that is not a new process unit.

* * * * *

Flexible operation unit means a process unit that manufactures different chemical products, polymers, or resins periodically by alternating raw materials or operating conditions. These units are also referred to as campaign plants or blocked operations.

Front-end refers to the unit operations in an EPPU prior to, and including, the stripping operations. For all gas-phased reaction processes, all unit operations are considered to be front-end.

* * * * *

Glass transition temperature means the temperature at which an elastomer polymer becomes rigid and brittle.

Grade means a group of recipes of an elastomer type having similar characteristics such as molecular weight, monomer composition, significant mooney values, and the presence or absence of extender oil and/or carbon black. More than one recipe may be used to produce the same grade.

Group 1 batch front-end process vent means a batch front-end process vent releasing annual organic HAP emissions greater than or equal to 11,800 kg/yr and with a cutoff flow rate, calculated in accordance with § 63.488(f), greater than or equal to the annual average batch vent flow rate. Annual organic HAP emissions and annual average batch vent flow rate are determined at the exit of the batch unit operation, as described in § 63.488(a)(2). Annual organic HAP emissions are determined as specified in § 63.488(b), and annual average batch vent flow rate is determined as specified in § 63.488(e).

* * * * *

Group 1 continuous front-end process vent means a continuous front-end process vent for which the flow rate is greater than or equal to 0.005 standard cubic meter per minute, the total organic HAP concentration is greater than or equal to 50 parts per million by volume, and the total resource effectiveness index value, calculated according to § 63.115, is less than or equal to 1.0.

Group 2 continuous front-end process vent means a continuous front-end process vent for which the flow rate is less than 0.005 standard cubic meter per minute, the total organic HAP concentration is less than 50 parts per million by volume, or the total resource effectiveness index value, calculated according to § 63.115, is greater than 1.0.

* * * * *

Group 1 wastewater stream means a wastewater stream consisting of process wastewater from an existing or new affected source that meets the criteria for Group 1 status in § 63.132(c), with the exceptions listed in § 63.501(a)(10) for the purposes of this subpart (i.e., for organic HAP listed on Table 5 of this subpart only).

* * * * *

Halogenated continuous front-end process vent means a continuous front-end process vent determined to have a mass emission rate of halogen atoms contained in organic compounds of 0.45 kg/hr or greater determined by the procedures presented in § 63.115(d)(2)(v).

* * * * *

Highest-HAP recipe for a product means the recipe of the product with the highest total mass of HAP charged to the reactor during the production of a single batch of product.

* * * * *

Initial start-up means the first time a new or reconstructed affected source begins production of an elastomer product, or, for equipment added or changed as described in § 63.480(i), the first time the equipment is put into operation to produce an elastomer product. Initial start-up does not include operation solely for testing equipment. Initial start-up does not include subsequent start-ups of an affected source or portion thereof following malfunctions or shutdowns or following changes in product for flexible operation units or following recharging of equipment in batch operation. Further, for purposes of § 63.502, initial start-up does not include subsequent start-ups of affected sources or portions thereof following malfunctions or process unit shutdowns.

* * * * *

Maintenance wastewater is defined in § 63.101, except that the term "elastomer product process unit" shall apply whenever the term "chemical manufacturing process unit" is used. Further, the generation of wastewater from the routine rinsing or washing of equipment in batch operation between batches is not maintenance wastewater, but is considered to be process wastewater, for the purposes of this subpart.

Maximum true vapor pressure is defined in § 63.111, except that the terms "transfer" and "transferred" shall not apply for the purposes of this subpart.

Multicomponent system means, as used in conjunction with batch front-end process vents, a stream whose liquid and/or vapor contains more than one compound.

* * * * *

New process unit means a process unit for which the construction or reconstruction commenced after June 12, 1995.

* * * * *

Nitrile butadiene rubber means a polymer consisting primarily of unsaturated nitriles and dienes, usually acrylonitrile and 1,3-butadiene, not including nitrile butadiene latex.

On-site or on site means, with respect to records required to be maintained by this subpart or required by another subpart referenced by this subpart, that records are stored at a location within a major source which encompasses the affected source. On-site includes, but is not limited to, storage at the affected source or EPPU to which the records pertain, or storage in central files elsewhere at the major source.

Operating day means the period defined by the owner or operator in the Notification of Compliance Status required by § 63.506(e)(5). The operating day is the period for which daily average monitoring values and batch cycle daily average monitoring values are determined.

Organic hazardous air pollutant(s) (organic HAP) means one or more of the chemicals listed in Table 5 of this subpart or any other chemical which:

(1) Is knowingly produced or introduced into the manufacturing process other than as an impurity; and

(2) Is listed in Table 2 of subpart F of this part.

Polybutadiene rubber by solution means a polymer of 1,3-butadiene produced using a solution process.

* * * * *

Process unit means a collection of equipment assembled and connected by hard-piping or duct work, used to process raw materials and to manufacture a product.

Process vent means a gaseous emission stream from a unit operation that is discharged to the atmosphere either directly or after passing through one or more control, recovery, or recapture devices. Unit operations that may have process vents are condensers, distillation units, reactors, or other unit operations within the EPPU. Process vents exclude pressure releases, gaseous streams routed to a fuel gas system(s), and leaks from equipment regulated under § 63.502. A gaseous emission stream is no longer considered to be a process vent after the stream has been controlled and monitored in accordance with the applicable provisions of this subpart.

Product means a polymer produced using the same monomers and varying in additives (*e.g.*, initiators, terminators, etc.); catalysts; or in the relative proportions of monomers, that is manufactured by a process unit. With respect to polymers, more than one recipe may be used to produce the same product, and there can be more than one grade of a product. As an example, styrene butadiene latex and halobutyl rubber each represent a different product. Product also means a chemical that is not a polymer, that is manufactured by a process unit. By-products, isolated intermediates, impurities, wastes, and trace contaminants are not considered products.

Recipe means a specific composition, from among the range of possible compositions that may occur within a product, as defined in this section. A recipe is determined by the proportions of monomers and, if present, other reactants and additives that are used to make the recipe. For example, styrene butadiene latex without additives; styrene butadiene latex with an additive; and styrene butadiene latex with different proportions of styrene to butadiene are all different recipes of the same product, styrene butadiene latex.

Reconstruction means the addition of new components or the replacement of existing components at an affected source or at a previously unaffected stationary source that becomes an affected source as a result of the change, to such an extent that:

(1) The fixed capital cost of the new components exceeds 50 percent of the fixed capital cost that would be required to construct a comparable new affected source; and

(2) It is technologically and economically feasible for the reconstructed source to meet the provisions of this subpart.

Recovery device means:

(1) An individual unit of equipment capable of and normally used for the purpose of recovering chemicals for:

(i) Use;

(ii) Reuse;

(iii) Fuel value (*i.e.*, net heating value); or

(iv) For sale for use, reuse, or fuel value (*i.e.*, net heating value).

(2) Examples of equipment that may be recovery devices include absorbers, carbon adsorbers, condensers, oil-water separators or organic-water separators, or organic removal devices such as decanters, strippers, or thin film evaporation units. For the purposes of the monitoring, recordkeeping, or reporting requirements of this subpart, recapture devices are considered recovery devices.

Recovery operations equipment means the equipment used to separate the components of process streams. Recovery operations equipment includes distillation units, condensers, etc. Equipment used for wastewater treatment and recovery or recapture devices used as control devices shall not be considered recovery operations equipment.

Residual is defined in § 63.111, except that when the definition in § 63.111 uses the term "Table 9 compounds," the term "organic HAP listed in Table 5 of subpart U of this part" shall apply, for the purposes of this subpart.

Resin, for the purposes of this subpart, means a polymer with the following characteristics:

(1) The polymer is a block polymer;

(2) The manufactured polymer does not require vulcanization to make useful products;

(3) The polymer production process is operated to achieve at least 99 percent monomer conversion; and

(4) The polymer process unit does not recycle unreacted monomer back to the process.

Shutdown means for purposes including, but not limited to, periodic maintenance, replacement of equipment, or repair, the cessation of operation of an affected source, an EPPU within an affected source, a waste management unit or unit operation within an affected source, or equipment required or used to comply with this subpart, or the emptying or degassing of a storage vessel. For purposes of the wastewater provisions of § 63.501, shutdown does not include the routine rinsing or washing of equipment in batch operation between batches. For purposes of the batch front-end process vent provisions in §§ 63.486 through 63.492, the cessation of equipment in batch operation is not a shutdown, unless the equipment undergoes maintenance, is replaced, or is repaired.

* * * * *

Start-up means the setting into operation of an affected source, an EPPU within the affected source, a waste management unit or unit operation within an affected source, or equipment required or used to comply with this subpart, or a storage vessel after emptying and degassing. For both continuous and batch front-end processes, start-up includes initial start-up and operation solely for testing equipment. For both continuous and batch front-end processes, start-up does not include the recharging of equipment in batch operation. For continuous front-end processes, start-up includes transitional conditions due to changes in product for flexible operation units. For batch front-end processes, start-up does not include transitional conditions due to changes in product for flexible operation units.

Steady-state conditions means that all variables (temperatures, pressures, volumes, flow rates, etc.) in a process do not vary significantly with time; minor fluctuations about constant mean values may occur.

Storage vessel means a tank or other vessel that is used to store liquids that contain one or more organic HAP. Storage vessels do not include:

(1) Vessels permanently attached to motor vehicles such as trucks, railcars, barges, or ships;

(2) Pressure vessels designed to operate in excess of 204.9 kilopascals and without emissions to the atmosphere;

(3) Vessels with capacities smaller than 38 cubic meters;

(4) Vessels and equipment storing and/or handling material that contains no organic HAP, or organic HAP as impurities only;

(5) Surge control vessels and bottoms receivers; and

(6) Wastewater storage tanks.

Stripper means a unit operation where stripping occurs.

Stripping means the removal of organic compounds from a raw elastomer product. In the production of an elastomer, stripping is a discrete step that occurs after the reactors and before the dryers (other than those dryers with a primary purpose of devolitalization) and other finishing operations.

Examples of types of stripping include steam stripping, direct volatilization, chemical stripping, and other methods of devolatilization. For the purposes of this subpart, devolatilization that occurs in dryers (other than those dryers with a primary purpose of devolitalization), extruders, and other finishing operations is not stripping.

* * * * *

Styrene butadiene rubber by solution means a polymer that consists primarily of styrene and butadiene monomer units and is produced using a solution process.

Supplemental combustion air means the air that is added to a vent stream after the vent stream leaves the unit operation. Air that is part of the vent stream as a result of the nature of the unit operation is not considered supplemental combustion air. Air required to operate combustion device burner(s) is not considered supplemental combustion air. Air required to ensure the proper operation of catalytic oxidizers, to include the intermittent addition of air upstream of the catalyst bed to maintain a minimum threshold flow rate through the catalyst bed or to avoid excessive temperatures in the catalyst bed, is not considered to be supplemental combustion air.

Suspension process means a polymerization process where the monomer(s) is in a state of suspension, with the help of suspending agents in a medium other than water (typically an organic solvent). The resulting polymers are not soluble in the reactor medium.

Total organic compounds (TOC) means those compounds, excluding methane and ethane, measured according to the procedures of Method 18 or Method 25A, 40 CFR part 60, appendix A.

Total resource effectiveness index value or TRE index value means a measure of the supplemental total resource requirement per unit reduction of organic HAP associated with a continuous front-end process vent stream, based on vent stream flow rate, emission rate of organic HAP, net heating value, and corrosion properties (whether or not the continuous front-end process vent stream contains halogenated compounds), as quantified by the equations given under § 63.115, with the exceptions noted in § 63.485.

Vent stream, as used in reference to batch front-end process vents, continuous front-end process vents, and aggregate batch vent streams, means the emissions from one or more process vents.

Waste management unit is defined in § 63.111, except that where the definition in § 63.111 uses the term "chemical manufacturing process unit," the term "EPPU" shall apply for the purposes of this subpart.

Wastewater means water that:

(1) Contains either:

(i) An annual average concentration of organic HAP listed in Table 5 of this subpart of at least 5 parts per million by weight and has an annual average flow rate of 0.02 liter per minute or greater; or

(ii) An annual average concentration of organic HAP listed on Table 5 of this subpart of at least 10,000 parts per million by weight at any flow rate; and

(2) Is discarded from an EPPU that is part of an affected source. Wastewater is process wastewater or maintenance wastewater.

Wastewater stream means a stream that contains wastewater as defined in this section.

5. Section 63.483 is amended by:

a. Revising paragraph (a) introductory text;

b. Revising paragraph (b);

c. Revising paragraph (c); and

d. Adding paragraph (d).

The revisions and addition read as follows:

§ 63.483 Emission standards.

(a) Except as allowed under paragraphs (b) through (d) of this section, the owner or operator of an existing or new affected source shall comply with the provisions in:

* * * * *

(b) When emissions of different kinds (*i.e.*, emissions from continuous front-end process vents, batch front-end process vents, aggregate batch vent streams, storage vessels, process wastewater, and/or in-process equipment subject to § 63.149) are combined, and at least one of the emission streams would be classified as Group 1 in the absence of combination with other emission streams, the owner or operator of an affected source shall comply with the requirements of either paragraph (b)(1) or (b)(2) of this section, as appropriate. For purposes of this paragraph (b), owners or operators of affected sources with combined emission streams containing one or more batch front-end process vents and containing one or more continuous front-end process vents may comply with either paragraph (b)(1) or (b)(2) of this section, as appropriate. For purposes of this paragraph (b), owners or operators of affected sources with combined emission streams containing one or more batch front-end process vents but not containing one or more continuous process vents shall comply with paragraph (b)(3) of this section.

(1) Comply with the applicable requirements of this subpart for each kind of emission in the stream as specified in paragraphs (a)(1) through (a)(6) of this section.

(2) Comply with the first set of requirements, identified in paragraphs (b)(2)(i) through (b)(2)(v) of this section, which applies to any individual emission stream that is included in the combined stream, where either that emission stream would be classified as Group 1 in the absence of combination with other emission streams, or the owner or operator chooses to consider that emission stream to be Group 1 for purposes of this paragraph. Compliance with the first applicable set of requirements identified in paragraphs (b)(2)(i) through (b)(2)(v) of this section constitutes compliance with all other requirements in paragraphs (b)(2)(i) through (b)(2)(v) of this section applicable to other types of emissions in the combined stream.

(i) The requirements of this subpart for Group 1 continuous front-end process vents, including applicable monitoring, recordkeeping, and reporting;

(ii) The requirements of § 63.119(e), as specified in § 63.484, for control of emissions from Group 1 storage vessels, including applicable monitoring, recordkeeping, and reporting;

(iii) The requirements of § 63.139, as specified in § 63.501, for control devices used to control emissions from waste management units, including applicable monitoring, recordkeeping, and reporting;

(iv) The requirements of § 63.139, as specified in § 63.501, for closed vent systems for control of emissions from in-process equipment subject to § 63.149, as specified in § 63.501, including applicable monitoring, recordkeeping, and reporting; or

(v) The requirements of this subpart for aggregate batch vent streams, including applicable monitoring, recordkeeping, and reporting.

(3) The owner or operator of an affected source with combined emission streams containing one or more batch front-end process vents, but not containing one or more continuous front-end process vents, shall comply with paragraphs (b)(3)(i) and (b)(3)(ii) of this section.

(i) The owner or operator of the affected source shall comply with § 63.486 for the batch front-end process vent stream(s).

(ii) The owner or operator of the affected source shall comply with either paragraph (b)(1) or (b)(2) of this section, as appropriate, for the remaining emission streams.

(c) Instead of complying with §§ 63.484, 63.485, 63.493, and 63.501, the owner or operator of an existing affected source may elect to control any or all of the storage vessels, continuous front-end process vents, batch front-end process vents, aggregate batch vent streams, back-end process emissions, and wastewater streams and associated waste management units within the affected source, to different levels using an emissions averaging compliance approach that uses the procedures specified in § 63.503. The restrictions concerning which emission points may be included in an emissions average, including how many emission points may be included, are specified in § 63.503(a)(1). An owner or operator electing to use emissions averaging shall still comply with the provisions of §§ 63.484, 63.485, 63. 486, 63.493, and 63.501 for affected source emission points not included in the emissions average.

(d) A State may decide not to allow the use of the emissions averaging compliance approach specified in paragraph (c) of this section.

6. Section 63.484 is amended by:

a. Revising paragraph (a);
b. Revising paragraph (b)(2);
c. Revising paragraph (c);
d. Revising paragraph (d);
e. Revising paragraph (e);
f. Revising paragraph (f);
g. Revising paragraph (g);
h. Revising paragraph (h);
i. Revising paragraph (i) introductory text;
j. Revising paragraph (i)(1);
k. Revising paragraph (j);
l. Revising paragraph (k);
m. Revising paragraph (l);
n. Revising paragraph (m);
o. Revising paragraph (n);
p. Revising paragraph (o);
q. Revising paragraph (p);
r. Revising paragraph (q);
s. Adding paragraph (r); and
t. Adding paragraph (s).

The revisions and additions read as follows:

§ 63.484 Storage vessel provisions.

(a) This section applies to each storage vessel that is assigned to an affected source, as determined by § 63.480(g). Except for those storage vessels exempted by paragraph (b) of this section, the owner or operator of affected sources shall comply with the requirements of §§ 63.119 through 63.123 and 63.148, with the differences noted in paragraphs (c) through (s) of this section, for the purposes of this subpart.

(b) * * *

(2) Storage vessels containing latex products other than styrene-butadiene latex, located downstream of the stripping operations;

* * * * *

(c) When the term "storage vessel" is used in §§ 63.119 through 63.123, the definition of this term in § 63.482 shall apply for the purposes of this subpart.

(d) When the term "Group 1 storage vessel" is used in §§ 63.119 through 63.123, the definition of this term in § 63.482 shall apply for the purposes of this subpart.

(e) When the term "Group 2 storage vessel" is used in §§ 63.119 through 63.123, the definition of this term in § 63.482 shall apply for the purposes of this subpart.

(f) When the emissions averaging provisions of § 63.150 are referred to in § 63.119 and § 63.123, the emissions averaging provisions contained in § 63.503 shall apply for the purposes of this subpart.

(g) When December 31, 1992 is referred to in § 63.119, June 12, 1995 shall apply instead, for the purposes of this subpart.

(h) When April 22, 1994 is referred to in § 63.119, June 19, 2000 shall apply instead, for the purposes of this subpart.

(i) The owner or operator of an affected source shall comply with this paragraph instead of § 63.120(d)(1)(ii) for the purposes of this subpart. If the control device used to comply with § 63.119(e) is also used to comply with any of the requirements found in §§ 63.485 through 63.501, the performance test required in or accepted by the applicable requirements in §§ 63.485 through 63.501 is acceptable for demonstrating compliance with § 63.119(e), for the purposes of this subpart. The owner or operator will not be required to prepare a design evaluation for the control device as described in § 63.120(d)(1)(i), if the performance test meets the criteria specified in paragraphs (i)(1) and (i)(2) of this section.

(1) The performance test demonstrates that the control device achieves greater than or equal to the required control efficiency specified in § 63.119(e)(1) or § 63.119(e)(2), as applicable; and

* * * * *

(j) When the term "range" is used in §§ 63.120(d)(3)(i), 63.120(d)(5), and 63.122(g)(2), the term "level" shall apply instead, for the purposes of this subpart.

(k) For purposes of this subpart, the monitoring plan required by § 63.120(d)(2) shall specify for which control devices the owner or operator has selected to follow the procedures for continuous monitoring specified in § 63.505. For those control devices for which the owner or operator has selected to not follow the procedures for continuous monitoring specified in § 63.505, the monitoring plan shall include a description of the parameter or parameters to be monitored to ensure that the control device is being properly operated and maintained, an explanation of the criteria used for selection of that parameter (or parameters), and the frequency with which monitoring will be performed (*e.g.*, when the liquid level in the storage vessel is being raised), as specified in § 63.120(d)(2)(i).

(l) For purposes of this subpart, the monitoring plan required by § 63.122(b) shall be included in the Notification of Compliance Status required by § 63.506(e)(5).

(m) When the Notification of Compliance Status requirements contained in § 63.152(b) are referred to in §§ 63.120, 63.122, and 63.123, the Notification of Compliance Status requirements contained in § 63.506(e)(5) shall apply for the purposes of this subpart.

(n) When the Periodic Report requirements contained in § 63.152(c) are referred to in §§ 63.120 and 63.122, the Periodic Report requirements contained in § 63.506(e)(6) shall apply for the purposes of this subpart.

(o) When other reports as required in § 63.152(d) are referred to in § 63.122, the reporting requirements contained in § 63.506(e)(7) shall apply for the purposes of this subpart.

(p) When the Initial Notification requirements contained in § 63.151(b) are referred to in §§ 63.119 through 63.123, for the purposes of this subpart the owner or operator of an affected source need not comply.

(q) When the determination of equivalence criteria in § 63.102(b) are referred to in § 63.121(a), the provisions in § 63.6(g) shall apply for the purposes of this subpart.

(r) When § 63.119(a) requires compliance according to the schedule provisions in § 63.100, owners and operators of affected sources shall instead comply with the requirements in §§ 63.119(a)(1) through 63.119(a)(4) by the compliance date for storage vessels, which is specified in § 63.481.

(s) In § 63.120(e)(1), instead of the reference to § 63.11(b), the requirements of § 63.504(c) shall apply.

7. Section 63.485 is revised to read as follows:

§ 63.485 Continuous front-end process vent provisions.

(a) For each continuous front-end process vent located at an affected source, the owner or operator shall

comply with the requirements of §§ 63.113 through 63.118, except as provided for in paragraphs (b) through (v) of this section. The owner or operator of continuous front-end process vents that are combined with one or more batch front-end process vents shall comply with paragraph (o) or (p) of this section.

(b) When the term "process vent" is used in §§ 63.113 through 63.118, the term "continuous front-end process vent," and the definition of this term in § 63.482 shall apply for the purposes of this subpart.

(c) When the term "halogenated process vent" is used in §§ 63.113 through 63.118, the term "halogenated continuous front-end process vent," and the definition of this term in § 63.482 shall apply for the purposes of this subpart.

(d) When the term "Group 1 process vent" is used in §§ 63.113 through 63.118, the term "Group 1 continuous front-end process vent," and the definition of this term in § 63.482 shall apply for the purposes of this subpart.

(e) When the term "Group 2 process vent" is used in §§ 63.113 through 63.118, the term "Group 2 continuous front-end process vent," and the definition of this term in § 63.482 shall apply for the purposes of this subpart.

(f) When December 31, 1992 (i.e., the proposal date for subpart G of this part) is referred to in § 63.113, June 12, 1995 shall instead apply, for the purposes of this subpart.

(g) When §§ 63.151(f), alternative monitoring parameters, and 63.152(e), submission of an operating permit, are referred to in §§ 63.114(c) and 63.117(e), 63.506(f), alternative monitoring parameters, and § 63.506(e)(8), submission of an operating permit, respectively, shall apply for the purposes of this subpart.

(h) When the Notification of Compliance Status requirements contained in § 63.152(b) are referred to in §§ 63.114, 63.117, and 63.118, the Notification of Compliance Status requirements contained in § 63.506(e)(5) shall apply for the purposes of this subpart.

(i) When the Periodic Report requirements contained in § 63.152(c) are referred to in §§ 63.117 and 63.118, the Periodic Report requirements contained in § 63.506(e)(6) shall apply for the purposes of this subpart.

(j) When the definition of excursion in § 63.152(c)(2)(ii)(A) is referred to in § 63.118(f)(2), the definition of excursion in § 63.505(g) and (h) shall apply for the purposes of this subpart.

(k) When § 63.114(e) specifies that an owner or operator shall submit the information required in § 63.152(b) in order to establish the parameter monitoring range, the owner or operator of an affected source shall comply with the provisions of § 63.505 for establishing the parameter monitoring level and shall comply with § 63.506(e)(5) for the purposes of reporting information related to the establishment of the parameter monitoring level, for the purposes of this subpart. Further, the term "level" shall apply whenever the term "range" is used in §§ 63.114, 63.117, and 63.118.

(l) When reports of process changes are required under § 63.118(g), (h), (i), or (j), paragraphs (l)(1) through (l)(4) of this section shall apply for the purposes of this subpart. In addition, for the purposes of this subpart paragraph (l)(5) of this section applies, and § 63.118(k) does not apply to owners or operators of affected sources.

(1) For the purposes of this subpart, whenever a process change, as defined in § 63.115(e), is made that causes a Group 2 continuous front-end process vent to become a Group 1 continuous front-end process vent, the owner or operator shall submit a report within 180 days after the process change is made or with the next Periodic Report, whichever is later. A description of the process change shall be submitted with the report of the process change, and the owner or operator of the affected source shall comply with the Group 1 provisions in §§ 63.113 through 63.118 in accordance with § 63.480(i)(2)(ii) or (i)(2)(iii), as applicable.

(2) Whenever a process change, as defined in § 63.115(e), is made that causes a Group 2 continuous front-end process vent with a TRE greater than 4.0 to become a Group 2 continuous front-end process vent with a TRE less than 4.0, the owner or operator shall submit a report within 180 days after the process change is made or with the next Periodic Report, whichever is later. A description of the process change shall be submitted with the report of the process change, and the owner or operator shall comply with the provisions in § 63.113(d) by the dates specified in § 63.481.

(3) Whenever a process change, as defined in § 63.115(e), is made that causes a Group 2 continuous front-end process vent with a flow rate less than 0.005 standard cubic meter per minute (scmm) to become a Group 2 continuous front-end process vent with a flow rate of 0.005 scmm or greater and a TRE index value less than or equal to 4.0, the owner or operator shall submit a report within 180 days after the process change is made or with the next Periodic Report, whichever is later. A description of the process change shall be submitted with the report of the process change, and the owner or operator shall comply with the provisions in § 63.113(d) by the dates specified in § 63.481.

(4) Whenever a process change, as defined in § 63.115(e), is made that causes a Group 2 continuous front-end process vent with an organic HAP concentration less than 50 parts per million by volume (ppmv) to become a Group 2 continuous front-end process vent with an organic HAP concentration of 50 ppmv or greater and a TRE index value less than or equal to 4.0, the owner or operator shall submit a report within 180 days after the process change is made or with the next Periodic Report, whichever is later. A description of the process change shall be submitted with the report of the process change, and the owner or operator shall comply with the provisions in § 63.113(d) by the dates specified in § 63.481.

(5) The owner or operator is not required to submit a report of a process change if one of the conditions listed in paragraphs (l)(5)(i), (l)(5)(ii), (l)(5)(iii), or (l)(5)(iv) of this section is met.

(i) The change does not meet the description of a process change in § 63.115(e);

(ii) The vent stream flow rate is recalculated according to § 63.115(e) and the recalculated value is less than 0.005 standard cubic meter per minute;

(iii) The organic HAP concentration of the vent stream is recalculated according to § 63.115(e) and the recalculated value is less than 50 parts per million by volume; or

(iv) The TRE index value is recalculated according to § 63.115(e) and the recalculated value is greater than 4.0.

(m) When § 63.118 (periodic reporting and recordkeeping requirements) refers to § 63.152(f), the recordkeeping requirements in § 63.506(d) shall apply for the purposes of this subpart.

(n) When §§ 63.115 and 63.116 refer to Table 2 of subpart F of this part, the owner or operator is only required to consider organic HAP listed on Table 5 of this subpart, for the purposes of this subpart.

(o) If a batch front-end process vent or aggregate batch vent stream is combined with a continuous front-end process vent, the owner or operator of the affected source containing the combined vent stream shall comply with paragraph (o)(1); with paragraph (o)(2) and with paragraph (o)(3) or (o)(4); or with paragraph (o)(5) of this section, as appropriate.

(1) If a batch front-end process vent or aggregate batch vent stream is combined with a Group 1 continuous front-end

process vent prior to the combined vent stream being routed to a control device, the owner or operator of the affected source containing the combined vent stream shall comply with the requirements in paragraph (o)(1)(i) or (o)(1)(ii) of this section.

(i) All requirements for a Group 1 process vent stream in §§ 63.113 through 63.118, except as otherwise provided in this section. As specified in § 63.504(a)(1), performance tests shall be conducted at maximum representative operating conditions. For the purpose of conducting a performance test on a combined vent stream, maximum representative operating conditions shall be when batch emission episodes are occurring that result in the highest organic HAP emission rate (for the combined vent stream) that is achievable during one of the periods listed in § 63.504(a)(1)(i) or § 63.504(a)(1)(ii), without causing any of the situations described in paragraphs (o)(1)(i)(A) through (o)(1)(i)(C) of this section to occur.

(A) Causing damage to equipment;

(B) Necessitating that the owner or operator make product that does not meet an existing specification for sale to a customer; or

(C) Necessitating that the owner or operator make product in excess of demand.

(ii) Comply with the provisions in § 63.483(b)(1), as allowed under § 63.483(b).

(2) If a batch front-end process vent or aggregate batch vent stream is combined with a continuous front-end process vent prior to the combined vent stream being routed to a recovery device, the TRE index value for the combined vent stream shall be calculated at the exit of the last recovery device. The TRE shall be calculated during periods when one or more batch emission episodes are occurring that result in the highest organic HAP emission rate (in the combined vent stream that is being routed to the recovery device) that is achievable during the 6-month period that begins 3 months before and ends 3 months after the TRE calculation, without causing any of the situations described in paragraphs (o)(2)(i) through (o)(2)(iii) of this section to occur.

(i) Causing damage to equipment;

(ii) Necessitating that the owner or operator make product that does not meet an existing specification for sale to a customer; or

(iii) Necessitating that the owner or operator make product in excess of demand.

(3) If the combined vent stream described in paragraph (o)(2) of this section meets the requirements in paragraphs (o)(3)(i), (o)(3)(ii), and (o)(3)(iii) of this section, the combined vent stream shall be subject to the requirements for Group 1 process vents in §§ 63.113 through 63.118, except as otherwise provided in this section, as applicable. Performance tests for the combined vent stream shall be conducted at maximum representative operating conditions, as described in paragraph (o)(1) of this section.

(i) The TRE index value of the combined stream is less than or equal to 1.0;

(ii) The flow rate of the combined vent stream is greater than or equal to 0.005 standard cubic meter per minute; and

(iii) The total organic HAP concentration is greater than or equal to 50 parts per million by volume for the combined vent stream.

(4) If the combined vent stream described in paragraph (o)(2) of this section meets the requirements in paragraph (o)(4)(i), (ii), or (iii) of this section, the combined vent stream shall be subject to the requirements for Group 2 process vents in §§ 63.113 through 63.118, except as otherwise provided in this section, as applicable.

(i) The TRE index value of the combined vent stream is greater than 1.0;

(ii) The flow rate of the combined vent stream is less than 0.005 standard cubic meter per minute; or

(iii) The total organic HAP concentration is less than 50 parts per million by volume for the combined vent stream.

(5) If a batch front-end process vent or aggregate batch vent stream is combined with a Group 2 continuous front-end process vent, the owner or operator shall comply with the requirements in either paragraph (o)(5)(i) or (o)(5)(ii) of this section.

(i) The owner or operator shall comply with the requirements in §§ 63.113 through 63.118 for Group 1 process vents; or

(ii) The owner or operator shall comply with § 63.487(e)(2) for batch front-end process vents and aggregate batch vent streams.

(p) If any gas stream that originates outside of an affected source that is subject to this subpart is normally conducted through the same final recovery device as any continuous front-end process vent stream subject to this subpart, the combined vent stream shall comply with all requirements in §§ 63.113 through 63.118, except as otherwise provided in this section, as applicable.

(1) Instead of measuring the vent stream flow rate at the sampling site specified in § 63.115(b)(1), the sampling site for vent stream flow rate shall be prior to the final recovery device and prior to the point at which the gas stream that is not controlled under this subpart is introduced into the combined vent stream.

(2) Instead of measuring total organic HAP or TOC concentrations at the sampling site specified in § 63.115(c)(1), the sampling site for total organic HAP or TOC concentration shall be prior to the final recovery device and prior to the point at which the gas stream that is not controlled under this subpart is introduced into the combined vent stream.

(3) The efficiency of the final recovery device (determined according to paragraph (p)(4) of this section) shall be applied to the total organic HAP or TOC concentration measured at the sampling site described in paragraph (p)(2) of this section to determine the exit concentration. This exit concentration of total organic HAP or TOC shall then be used to perform the calculations outlined in § 63.115(d)(2)(iii) and § 63.115(d)(2)(iv), for the combined vent stream exiting the final recovery device.

(4) The efficiency of the final recovery device is determined by measuring the total organic HAP or TOC concentration using Method 18 or 25A, 40 CFR part 60, appendix A, at the inlet to the final recovery device after the introduction of any gas stream that is not controlled under this subpart, and at the outlet of the final recovery device.

(q) Group 1 halogenated continuous front-end process vents described in either paragraph (q)(1) or (q)(2) of this section are exempt from the requirements to control hydrogen halides and halogens from the outlet of combustion devices contained in § 63.113(a)(1)(ii) and § 63.113(c).

(1) Group 1 halogenated continuous front-end process vents at existing affected sources producing butyl rubber, halobutyl rubber, or ethylene propylene rubber using a solution process, if the conditions in paragraphs (q)(1)(i) and (ii) of this section are met. Group 1 halogenated continuous front-end process vents at new affected sources producing butyl rubber, halobutyl rubber, or ethylene propylene rubber using a solution process are not exempt from § 63.113(a)(1)(ii) and § 63.113(c).

(i) If the halogenated continuous front-end process vent stream was controlled by a combustion device prior to June 12, 1995; and

(ii) If the requirements of § 63.113(a)(2); § 63.113(a)(3); § 63.113(b) and the associated testing requirements in § 63.116; or § 63.11(b) and § 63.504(c) are met.

(2) Group 1 halogenated continuous front-end process vents at new and existing affected sources producing an elastomer using a gas-phased reaction process, provided that the requirements of § 63.113(a)(2); § 63.113(a)(3); § 63.113(b) and the associated testing requirements in § 63.116; or § 63.11(b) and § 63.504(c) are met.

(r) The compliance date for continuous front-end process vents subject to the provisions of this section is specified in § 63.481.

(s) *Internal combustion engines.* In addition to the three options for the control of a Group 1 continuous front-end process vent listed in § 63.113(a)(1) through (3), an owner or operator will be permitted to route emissions of organic HAP to an internal combustion engine, provided the conditions listed in paragraphs (s)(1) through (s)(5) of this section are met.

(1) The vent stream routed to the internal combustion engine shall not be a halogenated continuous front-end process vent stream.

(2) The organic HAP is introduced with the primary fuel.

(3) The internal combustion engine is operating at all times that organic HAP emissions are being routed to it. The owner or operator shall demonstrate that the internal combustion engine is operating by continuously monitoring the on/off status of the internal combustion engine.

(4) The owner or operator shall maintain hourly records verifying that the internal combustion engine was operating at all times that emissions were routed to it.

(5) The owner or operator shall include in the Periodic Report a report of all times that the internal combustion engine was not operating while emissions were being routed to it.

(6) If an internal combustion engine meeting the requirements of paragraphs (s)(1) through (5) of this section is used to comply with the provisions of § 63.113(a), the internal combustion engine is exempt from the source testing requirements of § 63.116.

(t) When the provisions of § 63.116(c)(3) and (c)(4) specify that Method 18, 40 CFR part 60, appendix A shall be used, Method 18 or Method 25A, 40 CFR part 60, appendix A may be used for the purposes of this subpart. The use of Method 25A, 40 CFR part 60, appendix A shall conform with the requirements in paragraphs (t)(1) and (t)(2) of this section.

(1) The organic HAP used as the calibration gas for Method 25A, 40 CFR part 60, appendix A shall be the single organic HAP representing the largest percent by volume of the emissions.

(2) The use of Method 25A, 40 CFR part 60, appendix A is acceptable if the response from the high-level calibration gas is at least 20 times the standard deviation of the response from the zero calibration gas when the instrument is zeroed on the most sensitive scale.

(u) In § 63.116(a), instead of the reference to § 63.11(b), the requirements in § 63.504(c) shall apply.

(v) When a combustion device is used to comply with the 20 parts per million by volume outlet concentration standard specified in § 63.113(a)(2), the correction to 3 percent oxygen is only required when supplemental combustion air is used to combust the emissions, for the purposes of this subpart. In addition, the correction to 3 percent oxygen specified in § 63.116(c)(3) and (c)(3)(iii) is only required when supplemental combustion air is used to combust the emissions, for the purposes of this subpart. Finally, when a combustion device is used to comply with the 20 parts per million by volume outlet concentration standard specified in § 63.113(a)(2), an owner or operator shall record and report the outlet concentration required in § 63.117(a)(4)(ii) and (a)(4)(iv) corrected to 3 percent oxygen when supplemental combustion air is used to combust the emissions, for the purposes of this subpart. When supplemental combustion air is not used to combust the emissions, an owner or operator may record and report the outlet concentration required in § 63.117(a)(4)(ii) and (a)(4)(iv) on an uncorrected basis or corrected to 3 percent oxygen, for the purposes of this subpart.

8. Section 63.486 is revised to read as follows:

§ 63.486 Batch front-end process vent provisions.

(a) *Batch front-end process vents.* Except as specified in paragraph (b) of this section, owners and operators of new and existing affected sources with batch front-end process vents shall comply with the requirements in §§ 63.487 through 63.492. The batch front-end process vent group status shall be determined in accordance with § 63.488. Owners or operators of affected sources with batch front-end process vents classified as Group 1 shall comply with the reference control technology requirements for Group 1 batch front-end process vents in § 63.487, the monitoring requirements in § 63.489, the performance test methods and procedures to determine compliance in § 63.490, the recordkeeping requirements in § 63.491, and the reporting requirements in § 63.492. Owners and operators of all Group 2 batch front-end process vents shall comply with the applicable reference control technology requirements in § 63.487, the applicable recordkeeping requirements in § 63.491, and the applicable reporting requirements in § 63.492.

(b) *Aggregate batch vent streams.* Aggregate batch vent streams, as defined in § 63.482, are subject to the control requirements specified in § 63.487(b), as well as the monitoring, testing, recordkeeping, and reporting requirements specified in §§ 63.489 through 63.492 for aggregate batch vent streams.

9. Section 63.487 is amended by:

a. Revising paragraph (a) introductory text;

b. Revising paragraph (a)(1)(i);

c. Revising paragraph (b) introductory text;

d. Revising paragraph (b)(1)(i);

e. Revising paragraph (b)(2);

f. Revising paragraphs (c)(1) and (c)(2);

g. Revising paragraph (e);

h. Revising paragraph (f);

i. Revising paragraph (g); and

j. Adding paragraph (h).

The revisions and additions read as follows:

§ 63.487 Batch front-end process vents—reference control technology.

(a) *Batch front-end process vents.* The owner or operator of an affected source with a Group 1 batch front-end process vent, as determined using the procedures in § 63.488, shall comply with the requirements of either paragraph (a)(1) or (a)(2) of this section. Compliance may be based on either organic HAP or TOC.

(1) * * *

(i) The owner or operator of the affected source hall comply with the requirements of § 63.504(c) for the flare.

* * * * *

(b) *Aggregate batch vent streams.* The owner or operator of an aggregate batch vent stream that contains one or more Group 1 batch front-end process vents shall comply with the requirements of either paragraph (b)(1) or (b)(2) of this section. Compliance may be based on either organic HAP or TOC.

(1) * * *

(i) The owner or operator of the affected source shall comply with the requirements of § 63.504(c) for the flare.

* * * * *

(2) For each aggregate batch vent stream, reduce organic HAP emissions by 90 weight percent or to a concentration of 20 parts per million by volume, whichever is less stringent, on

a continuous basis using a control device. For combustion devices, the emission reduction or concentration shall be calculated on a dry basis, corrected to 3 percent oxygen.

(c) * * *

(1) If a combustion device is used to comply with paragraph (a)(2) or (b)(2) of this section for a halogenated batch front-end process vent or halogenated aggregate batch vent stream, the emissions exiting the combustion device shall be ducted to a halogen reduction device that reduces overall emissions of hydrogen halides and halogens by at least 99 percent before discharge to the atmosphere.

(2) A halogen reduction device may be used to reduce the halogen atom mass emission rate to less than 3,750 kg/yr for batch front-end process vents or aggregate batch vent streams and thus make the batch front-end process vent or aggregate batch vent stream nonhalogenated. The nonhalogenated batch front-end process vent or aggregate batch vent stream shall then comply with the requirements of either paragraph (a) or (b) of this section, as appropriate.

* * * * *

(e) *Combination of batch front-end process vents or aggregate batch vent streams with continuous front-end process vents.* If a batch front-end process vent or aggregate batch vent stream is combined with a continuous front-end process vent, the owner or operator shall determine whether the combined vent stream is subject to the provisions of §§ 63.486 through 63.492 according to paragraphs (e)(1) and (e)(2) of this section.

(1) A batch front-end process vent or aggregate batch vent stream combined with a continuous front-end process vent stream is not subject to the provisions of §§ 63.486 through 63.492, if the requirements in paragraph (e)(1)(i) and in either paragraph (e)(1)(ii) or (e)(1)(iii) are met.

(i) The only emissions to the atmosphere from the batch front-end process vent or aggregate batch vent stream prior to being combined with the continuous front-end process vent are from equipment subject to § 63.502.

(ii) The batch front-end vent stream or aggregate batch vent stream is combined with a Group 1 continuous front-end process vent stream prior to the combined vent stream being routed to a control device. In this paragraph (e)(1)(ii), the definition of control device as it relates to continuous front-end process vents shall be used. Furthermore, the combined vent stream discussed in this paragraph (e)(1)(ii) shall be subject to § 63.485(o)(1).

(iii) The batch front-end process vent or aggregate batch vent stream is combined with a continuous front-end process vent stream prior to being routed to a recovery device. In this paragraph (e)(1)(iii), the definition of recovery device as it relates to continuous front-end process vents shall be used. Furthermore, the combined vent stream discussed in this paragraph (e)(1)(iii) shall be subject to § 63.485(o)(2).

(2) If the batch front-end process vent or aggregate batch vent stream is combined with a Group 2 continuous front-end process vent, the group status of the batch front-end process vent shall be determined prior to its combination with the Group 2 continuous front-end process vent, in accordance with § 63.488, and the combined vent stream shall be subject to the requirements for aggregate batch vent streams in §§ 63.486 through 63.492.

(f) *Group 2 batch front-end process vents with annual emissions greater than or equal to the level specified in § 63.488(d).* The owner or operator of a Group 2 batch front-end process vent with annual emissions greater than or equal to the level specified in § 63.488(d) shall comply with the provisions of paragraph (f)(1), (f)(2), or (h) of this section.

(1) The owner or operator shall comply with the requirements in paragraphs (f)(1)(i) through (f)(1)(iv) of this section.

(i) The owner or operator shall establish a batch mass input limitation that ensures that the Group 2 batch front-end process vent does not become a Group 1 batch front-end process vent.

(ii) Over the course of the affected source's "year," as reported in the Notification of Compliance Status in accordance with § 63.506(e)(5)(iv), the owner or operator shall not charge a mass of HAP or material to the batch unit operation that is greater than the level established as the batch mass input limitation.

(iii) The owner or operator of an affected source shall comply with the recordkeeping requirements in § 63.491(d)(2), and the reporting requirements in § 63.492(a)(3), (b) and (c).

(iv) The owner or operator of an affected source shall comply with § 63.488(i) when process changes are made.

(2) Comply with the requirements of this subpart for Group 1 batch front-end process vents.

(g) *Group 2 batch front-end process vents with annual emissions less than the level specified in § 63.488(d).* The owner or operator of a Group 2 batch front-end process vent with annual organic HAP emissions less than the level specified in § 63.488(d), shall comply with paragraph (g)(1), (g)(2), (g)(3), or (g)(4) of this section.

(1) The owner or operator of the affected source shall comply with the requirements in paragraphs (g)(1)(i) through (g)(1)(iv) of this section.

(i) The owner or operator shall establish a batch mass input limitation that ensures emissions do not exceed the appropriate level specified in § 63.488(d).

(ii) Over the course of the affected source's "year," as reported in the Notification of Compliance Status in accordance with § 63.506(e)(5)(iv), the owner or operator shall not charge a mass of HAP or material to the batch unit operation that is greater than the level established as the batch mass input limitation.

(iii) The owner or operator of the affected source shall comply with the recordkeeping requirements in § 63.491(d)(1), and the reporting requirements in § 63.492(a)(2), (b), and (c).

(iv) The owner or operator of the affected source shall comply with § 63.488(i) when process changes are made.

(2) Comply with the requirements of paragraph (f)(1) of this section;

(3) Comply with the requirements of paragraph (f)(2) of this section; or

(4) Comply with the requirements of paragraph (h) of this section.

(h) Owners or operators of Group 2 batch front-end process vents are not required to establish a batch mass input limitation if the batch front-end process vent is Group 2 at the conditions specified in paragraphs (h)(1) and (h)(2) of this section and if the owner or operator complies with the recordkeeping provisions in §§ 63.491(a)(1) through (3), 63.491(a)(9), and 63.491(a)(4) through (6) as applicable, and the reporting requirements in § 63.492(a)(5) and (6) and (b).

(1) Emissions for the single highest-HAP recipe (considering all products that are produced in the batch unit operation) are used in the group determination; and

(2) The group determination assumes that the batch unit operation is operating at the maximum design capacity of the EPPU for 12 months.

10. Section 63.488 is amended by:

a. Revising paragraph (a)(1);

b. Revising paragraph (b) introductory text;

c. Revising paragraphs (b)(1) through (b)(3);

d. Revising paragraph (b)(4)(i) introductory text;

e. Revising paragraphs (b)(4)(i)(A) through (b)(4)(i)(D);

f. Revising paragraph (b)(4)(ii)(B)(*1*);

g. Revising paragraph (b)(4)(iii);

h. Revising paragraph (b)(5) introductory text;

i. Revising paragraphs (b)(5)(i) and (b)(5)(ii);

j. Revising paragraph (b)(5)(iii) introductory text;

k. Revising paragraphs (b)(5)(iii)(A) and (b)(5)(iii)(B);

l. Revising paragraph (b)(5)(iv);

m. Revising paragraph (b)(5)(v) introductory text;

n. Revising paragraph (b)(5)(v)(A);

o. Revising paragraph (b)(6);

p. Revising paragraph (d);

q. Revising paragraph (e) introductory text;

r. Revising paragraph (e)(1) introductory text;

s. Revising paragraph (e)(1)(i);

t. Revising paragraph (e)(1)(iii);

u. Revising paragraphs (e)(2) and (e)(3);

v. Revising paragraph (g);

w. Revising paragraph (h)(1) introductory text;

x. Revising paragraphs (h)(1)(iii) and (h)(1)(iv);

y. Revising paragraph (h)(2);

z. Revising paragraph (i) introductory text;

aa. Revising paragraphs (i)(1) through (i)(3); and

bb. Adding paragraph (b)(9).

The revisions and additions read as follows:

§ 63.488 Methods and procedures for batch front-end process vent group determination.

(a) * * *

(1) The procedures specified in paragraphs (b) through (g) shall be followed to determine the group status of each batch front-end process vent. This determination shall be made in accordance with either paragraph (a)(1)(i) or (a)(1)(ii) of this section.

(i) An owner or operator may choose to determine the group status of a batch front-end process vent based on the expected mix of products. For each product, emission characteristics of the single highest-HAP recipe, as defined in paragraph (a)(1)(iii) of this section, for that product, shall be used in the procedures in paragraphs (b) through (i) of this section.

(ii) An owner or operator may choose to determine the group status of a batch front-end process vent based on annualized production of the single highest-HAP recipe, as defined in paragraph (a)(1)(iii) of this section, considering all products produced or processed in the batch unit operation. The annualized production of the highest-HAP recipe shall be based exclusively on the production of the single highest-HAP recipe of all products produced or processed in the batch unit operation for a 12 month period. The production level used may be the actual production rate. It is not necessary to assume a maximum production rate (*i.e.*, 8,760 hours per year at maximum design production).

(iii) The single highest-HAP recipe for a product means the recipe of the product with the highest total mass of HAP charged to the reactor during the production of a single batch of product.

* * * * *

(b) *Determination of annual emissions.* The owner or operator shall calculate annual uncontrolled TOC or organic HAP emissions for each batch front-end process vent using the methods described in paragraphs (b)(1) through (b)(8) of this section. To estimate emissions from a batch emissions episode, owners or operators may use either the emissions estimation equations in paragraphs (b)(1) through (b)(4) of this section, or direct measurement as specified in paragraph (b)(5) of this section. Engineering assessment may also be used to estimate emissions from a batch emission episode, but only under the conditions described in paragraph (b)(6) of this section. In using the emissions estimation equations in paragraphs (b)(1) through (b)(4) of this section, individual component vapor pressure and molecular weight may be obtained from standard references. Methods to determine individual HAP partial pressures in multicomponent systems are described in paragraph (b)(9) of this section. Other variables in the emissions estimation equations may be obtained through direct measurement, as defined in paragraph (b)(5) of this section, through engineering assessment, as defined in paragraph (b)(6)(ii) of this section, by process knowledge, or by any other appropriate means. Assumptions used in determining these variables must be documented. Once emissions for the batch emission episode have been determined using either the emissions estimation equations, direct measurement, or engineering assessment, emissions from a batch cycle shall be calculated in accordance with paragraph (b)(7) of this section, and annual emissions from the batch front-end process vent shall be calculated in accordance with paragraph (b)(8) of this section.

(1) TOC or organic HAP emissions from the purging of an empty vessel shall be calculated using Equation 1. This equation does not take into account evaporation of any residual liquid in the vessel.

$$E_{episode} = \frac{(V_{ves})(P)(MW_{WAVG})}{RT}\left(1-0.37^{m}\right) \qquad \text{[Eq. 1]}$$

Where:

$E_{episode}$ = Emissions, kg/episode.

V_{ves} = Volume of vessel, m^3.

P = TOC or total organic HAP partial pressure, kPa.

MW_{WAVG} = Weighted average molecular weight of TOC or organic HAP in vapor, determined in accordance with paragraph (b)(4)(i)(D) of this section, kg/kmol.

R = Ideal gas constant, 8.314 $m^3 \cdot kPa/kmol \cdot °K$.

T = Temperature of vessel vapor space, °K.

m = Number of volumes of purge gas used.

(2) TOC or organic HAP emissions from the purging of a filled vessel shall be calculated using Equation 2.

$$E_{episode} = \frac{(y)(V_{dr})(P)^2(MW_{WAVG})}{RT\left(P-\sum_{i=1}^{n} P_i x_i\right)}(T_m) \qquad \text{[Eq. 2]}$$

Where:

$E_{episode}$ = Emissions, kg/episode.

y = Saturated mole fraction of all TOC or organic HAP in vapor phase.

V_{dr} = Volumetric gas displacement rate, m^3/min.

P = Pressure in vessel vapor space, kPa.

MW_{WAVG} = Weighted average molecular weight of TOC or organic HAP in vapor, determined in accordance with paragraph (b)(4)(i)(D) of this section, kg/kmol.

R = Ideal gas constant, 8.314 $m^3 \cdot kPa/kmol \cdot °K$.

T = Temperature of vessel vapor space, °K.

P_i = Vapor pressure of TOC or individual organic HAP i, kPa.

x_i = Mole fraction of TOC or organic HAP i in the liquid.

n = Number of organic HAP in stream. Note: Summation is not applicable if TOC emissions are being estimated.

T_m = Minutes/episode.

(3) Emissions from vapor displacement due to transfer of material into or out of a vessel shall be calculated using Equation 3.

$$E_{episode} = \frac{(y)(V)(P)(MW_{WAVG})}{RT} \qquad \text{[Eq. 3]}$$

Where:

$E_{episode}$ = Emissions, kg/episode.

y = Saturated mole fraction of all TOC or organic HAP in vapor phase.

V = Volume of gas displaced from the vessel, m^3.

P = Pressure of vessel vapor space, kPa.

MW_{WAVG} = Weighted average molecular weight of TOC or organic HAP in vapor, determined in accordance with paragraph (b)(4)(i)(D) of this section, kg/kmol.

R = Ideal gas constant, 8.314 $m^3 \cdot kPa/kmol \cdot °K$.

T = Temperature of vessel vapor space, °K.

(4) * * *

(i) If the final temperature to which the vessel contents is heated is lower than 50 K below the boiling point of the HAP in the vessel, then emissions shall be calculated using the equations in paragraphs (b)(4)(i)(A) through (b)(4)(i)(D) of this section.

(A) Emissions caused by heating of a vessel shall be calculated using Equation 4. The assumptions made for this calculation are atmospheric pressure of 760 mm Hg and the displaced gas is always saturated with VOC vapor in equilibrium with the liquid mixture.

$$E_{episode} = \left[\frac{\dfrac{\sum_{i=1}^{n}(P_i)_{T1}}{101.325 - \sum_{i=1}^{n}(P_i)_{T1}} + \dfrac{\sum_{i=1}^{n}(P_i)_{T2}}{101.325 - \sum_{i=1}^{n}(P_i)_{T2}}}{2} \right] * (\Delta\eta) \left[\frac{(MW_{WAVG,T1}) + (MW_{WAVG,T2})}{2} \right] \qquad \text{[Eq. 4]}$$

Where:

$E_{episode}$ = Emissions, kg/episode.

$(P_i)_{T1}$, $(P_i)_{T2}$ = Partial pressure (kPa) TOC or each organic HAP in the vessel headspace at initial (T1) and final (T2) temperature.

n = Number of organic HAP in stream. Note: Summation is not applicable if TOC emissions are being estimated.

$\Delta\eta$ = Number of kilogram-moles (kg-moles) of gas displaced, determined in accordance with paragraph (b)(4)(i)(B) of this section.

101.325 = Constant, kPa.

$(MW_{WAVG,T1})$, $(MW_{WAVG,T2})$ = Weighted average molecular weight of TOC or total organic HAP in the displaced gas stream, determined in accordance with paragraph (b)(4)(i)(D) of this section.

(B) The moles of gas displaced, $\Delta\eta$, is calculated using equation 5.

$$\Delta\eta = \frac{V_{fs}}{R}\left[\left(\frac{Pa_1}{T_1}\right) - \left(\frac{Pa_2}{T_2}\right)\right] \qquad \text{[Eq. 5]}$$

Where:

$\Delta\eta$ = Number of kg-moles of gas displaced.

V_{fs} = Volume of free space in the vessel, m^3.

R = Ideal gas constant, 8.314 $m^3 \bullet kPa/kmol \bullet K$.

Pa_1 = Initial noncondensible gas partial pressure in the vessel, kPa.

Pa_2 = Final noncondensible gas partial pressure, kPa.

T_1 = Initial temperature of vessel, K.

T_2 = Final temperature of vessel, K.

(C) The initial and final pressure of the noncondensible gas in the vessel shall be calculated using equation 6.

$$Pa = 101.325 - \sum_{i=1}^{n}(P_i)_T \qquad \text{[Eq. 6]}$$

Where:

Pa = Initial or final partial pressure of noncondensible gas in the vessel headspace, kPa.

101.325 = Constant, kPa.

$(P_i)_T$ = Partial pressure of TOC or each organic HAP i in the vessel headspace, kPa, at the initial or final temperature (T_1 or T_2).

n = Number of organic HAP in stream. Note: Summation is not applicable if TOC emissions are being estimated.

(D) The weighted average molecular weight of TOC or organic HAP in the displaced gas, MW_{WAVG}, shall be calculated using equation 7:

$$MW_{WAVG} = \frac{\sum_{i=1}^{n} (\text{mass of C})_i \, (\text{molecular weight of C})_i}{\sum_{i=1}^{n} (\text{mass of C})_i} \quad \text{[Eq. 7]}$$

Where:

c = TOC or organic HAP component

n = Number of TOC or organic HAP components in stream.

(ii) * * *

(B) * * *

(*1*) If the final temperature of the heatup is at or lower than 5 K below the boiling point, the final temperature for the last increment shall be the final temperature for the heatup, even if the last increment is less than 5 K.

* * * * *

(iii) If the vessel is operating with a condenser, and the vessel contents are heated to the boiling point, the primary condenser is considered part of the process, as described in § 63.488(a)(2). Emissions shall be calculated as the sum of Equation 4, which calculates emissions due to heating the vessel contents to the temperature of the gas exiting the condenser, and Equation 3, which calculates emissions due to the displacement of the remaining saturated noncondensible gas in the vessel. The final temperature in Equation 4 shall be set equal to the exit gas temperature of the condenser. Equation 3 shall be used as written below in Equation 3a, using free space volume, and T_2 is set equal to the condenser exit gas temperature.

$$E_{episode} = \frac{(y_i)(V_{fs})(P_T)(MW_{WAVG})}{(R)(T)} \quad \text{[Eq. 3a]}$$

Where:

$E_{episode}$ = Emissions, kg/episode.

y_i = Saturated mole fraction of all TOC or organic HAP in the vapor phase.

V_{fs} = Volume of the free space in the vessel, m^3.

P_T = Pressure of the vessel vapor space, kPa.

MW_{WAVG} = Weighted average molecular weight of TOC or organic HAP in vapor, determined in accordance with paragraph (b)(4)(i)(D) of this section.

R = Ideal gas constant, 8.314 m^3•kPa/kmol•K.

T = Temperature of condenser exit stream K.

(5) The owner or operator may estimate annual emissions for a batch emission episode by direct measurement. If direct measurement is used, the owner or operator shall either perform a test for the duration of a representative batch emission episode or perform a test during only those periods of the batch emission episode for which the emission rate for the entire episode can be determined or for which the emissions are greater than the average emission rate of the batch emission episode. The owner or operator choosing either of these options shall develop an emission profile for the entire batch emission episode, based on either process knowledge or test data collected, to demonstrate that test periods are representative. Examples of information that could constitute process knowledge include calculations based on material balances and process stoichiometry. Previous test results may be used provided the results are still relevant to the current batch front-end process vent conditions. Performance tests shall follow the procedures specified in paragraphs (b)(5)(i) through (b)(5)(iii) of this section. The procedures in either paragraph (b)(5)(iv) or (b)(5)(v) of this section shall be used to calculate the emissions per batch emission episode.

(i) Method 1 or 1A, 40 CFR part 60, appendix A, as appropriate, shall be used for selection of the sampling sites if the flow measuring device is a pitot tube. No traverse is necessary when Method 2A or 2D, 40 CFR part 60, appendix A is used to determine gas stream volumetric flow rate.

(ii) Annual average batch vent flow rate shall be determined as specified in paragraph (e) of this section.

(iii) Method 18 or Method 25A, of 40 CFR part 60, appendix A, shall be used to determine the concentration of TOC or organic HAP, as appropriate. The use of Method 25A, 40 CFR part 60, appendix A shall conform with the requirements in paragraphs (b)(5)(iii)(A) and (b)(5)(iii)(B) of this section.

(A) The organic HAP used as the calibration gas for Method 25A, 40 CFR part 60, appendix A shall be the single organic HAP representing the largest percent by volume of the emissions.

(B) The use of Method 25A, 40 CFR part 60, appendix A is acceptable if the response from the high-level calibration gas is at least 20 times the standard deviation of the response from the zero calibration gas when the instrument is zeroed on the most sensitive scale.

(iv) If an integrated sample is taken over the entire batch emission episode to determine average batch vent concentration of TOC or total organic HAP, emissions shall be calculated using Equation 8.

$$E_{episode} = K\left[\sum_{j=1}^{n} (C_j)(M_j)\right] AFR\,(T_h) \quad \text{[Eq. 8]}$$

Where:

$E_{episode}$ = Emissions, kg/episode

K = Constant, 2.494×10^{-6} $(ppmv)^{-1}$(gm-mole/scm) (kg/gm) (min/hr), where standard temperature is 20°C.

C_j = Average batch vent concentration of TOC or sample organic HAP component j of the gas stream for the batch emission episode, dry basis, ppmv.

M_j = Molecular weight of TOC or sample organic HAP component j of the gas stream, dry basis, gm/gm-mole.

AFR = Average batch vent flow rate of gas stream, dry basis, scmm.

T_h = Hours/episode

n = Number of organic HAP in stream. Note: Summation not applicable if TOC emissions are being estimated using a TOC concentration measured using Method 25A, 40 CFR part 60, appendix A.

(v) If grab samples are taken to determine the average batch vent concentration of TOC or total organic HAP, emissions shall be calculated according to paragraphs (b)(5)(v)(A) and (b)(5)(v)(B) of this section.

(A) For each measurement point, the emission rate shall be calculated using Equation 9.

$$E_{point} = K\left[\sum_{j=1}^{n} C_j M_j\right]FR \qquad \text{[Eq. 9]}$$

Where:

E_{point} = Emission rate for individual measurement point, kg/hr.

K = Constant, 2.494×10^{-6} (ppmv)$^{-1}$ (gm-mole/scm) (kg/gm) (min/hr), where standard temperature is 20°C.

C_j = Concentration of TOC or sample organic HAP component j of the gas stream, dry basis, ppmv.

M_j = Molecular weight of TOC or sample organic HAP component j of the gas stream, gm/gm-mole.

FR = Flow rate of gas stream for the measurement point, dry basis, scmm.

n = Number of organic HAP in stream. Note: Summation not applicable if TOC emissions are being estimated using a TOC concentration measured using Method 25A, 40 CFR part 60, appendix A.

* * * * *

(6) Engineering assessment may be used to estimate emissions from a batch emission episode, if the criteria in paragraph (b)(6)(i) are met. Data or other information used to demonstrate that the criteria in paragraph (b)(6)(i) of this section have been met shall be reported as specified in paragraph (b)(6)(iii) of this section. Paragraph (b)(6)(ii) of this section defines engineering assessment, for the purposes of estimating emissions from a batch emissions episode. All data, assumptions, and procedures used in an engineering assessment shall be documented.

(i) If the criteria specified in paragraph (b)(6)(i)(A), (B), or (C) are met for a specific batch emission episode, the owner or operator may use engineering assessment, as described in paragraph (b)(6)(ii) of this section, to estimate emissions from that batch emission episode, and the owner or operator is not required to use the emissions estimation equations described in paragraphs (b)(1) through (b)(4) of this section to estimate emissions from that batch emission episode.

(A) Previous test data, where the measurement of organic HAP or TOC emissions was an outcome of the test, show a greater than 20 percent discrepancy between the test value and the value estimated using the applicable equations in paragraphs (b)(1) through (b)(4) of this section. Paragraphs (b)(6)(i)(A)(*1*) and (*2*) of this section describe test data that will be acceptable under this paragraph (b)(6)(i)(A).

(*1*) Test data for the batch emission episode obtained during production of the product for which the demonstration is being made.

(*2*) Test data obtained for a batch emission episode from another process train, where the test data were obtained during production of the product for which the demonstration is being made. Test data from another process train may be used only if the owner or operator can demonstrate that the data are representative of the batch emission episode for which the demonstration is being made, taking into account the nature, size, operating conditions, production rate, and sequence of process steps (*e.g.*, reaction, distillation, etc.) of the equipment in the other process train.

(B) Previous test data obtained during the production of the product for which the demonstration is being made, for the batch emission episode with the highest organic HAP emissions on a mass basis, show a greater than 20 percent discrepancy between the test value and the value estimated using the applicable equations in paragraphs (b)(1) through (b)(4) of this section. If the criteria in this paragraph (b)(6)(i)(B) are met, then engineering assessment may be used for all batch emission episodes associated with that batch cycle for that batch unit operation.

(C) The owner or operator has requested approval to use engineering assessment to estimate emissions from a batch emissions episode. The request to use engineering assessment to estimate emissions from a batch emissions episode shall contain sufficient information and data to demonstrate to the Administrator that engineering assessment is an accurate means of estimating emissions for that particular batch emissions episode. The request to use engineering assessment to estimate emissions for a batch emissions episode shall be submitted in the Precompliance Report required under § 63.506(e)(3).

(ii) Engineering assessment includes, but is not limited to, the following:

(A) Previous test results, provided the test was representative of current operating practices.

(B) Bench-scale or pilot-scale test data obtained under conditions representative of current process operating conditions.

(C) Flow rate, TOC emission rate, or organic HAP emission rate specified or implied within a permit limit applicable to the batch front-end process vent.

(D) Design analysis based on accepted chemical engineering principles, measurable process parameters, or physical or chemical laws or properties. Examples of analytical methods include, but are not limited to:

(*1*) Use of material balances;

(*2*) Estimation of flow rate based on physical equipment design, such as pump or blower capacities;

(*3*) Estimation of TOC or organic HAP concentrations based on saturation conditions; and

(*4*) Estimation of TOC or organic HAP concentrations based on grab samples of the liquid or vapor.

(iii) Data or other information used to demonstrate that the criteria in paragraph (b)(6)(i) of this section have been met shall be reported as specified in paragraphs (b)(6)(iii)(A) and (b)(6)(iii)(B) of this section.

(A) Data or other information used to demonstrate that the criteria in paragraph (b)(6)(i)(A) or (b)(6)(i)(B) of this section have been met shall be reported in the Notification of Compliance Status, as required in § 63.492(a)(6).

(B) The request for approval to use engineering assessment to estimate emissions from a batch emissions episode as allowed under paragraph (b)(6)(i)(C) of this section, and sufficient data or other information for demonstrating to the Administrator that engineering assessment is an accurate means of estimating emissions for that particular batch emissions episode shall be submitted with the Precompliance Report, as required in § 63.506(e)(3).

* * * * *

(9) Individual HAP partial pressures in multicomponent systems shall be determined using the appropriate method specified in paragraphs (b)(9)(i) through (b)(9)(iii) of this section.

(i) If the components are miscible, use Raoult's law to calculate the partial pressures;

(ii) If the solution is a dilute aqueous mixture, use Henry's law constants to calculate partial pressures;

(iii) If Raoult's law or Henry's law are not appropriate or available, the owner or operator may use any of the options in paragraphs (b)(9)(iii)(A), (B), or (C) of this section.

(A) Experimentally obtained activity coefficients, Henry's law constants, or solubility data;

(B) Models, such as group-contribution models, to predict activity coefficients; or

(C) Assume the components of the system behave independently and use the summation of all vapor pressures from the HAP as the total HAP partial pressure.

* * * * *

(d) *Minimum emission level exemption.* A batch front-end process vent with annual emissions of TOC or organic HAP less than 11,800 kg/yr is considered a Group 2 batch front-end process vent and the owner or operator of that batch front-end process vent shall comply with the requirements in § 63.487(f) or (g). Annual emissions of TOC or organic HAP are determined at the exit of the batch unit operation, as described in paragraph (a)(2) of this section, and are determined as specified in paragraph (b) of this section. The owner or operator of that batch front-end process vent is not required to comply with the provisions in paragraphs (e) through (g) of this section.

(e) *Determination of average batch vent flow rate and annual average batch vent flow rate.* The owner or operator shall determine the average batch vent flow rate for each batch emission episode in accordance with one of the procedures provided in paragraphs (e)(1) through (e)(2) of this section. The annual average batch vent flow rate for a batch front-end process vent shall be calculated as specified in paragraph (e)(3) of this section.

(1) Determination of the average batch vent flow rate for a batch emission episode by direct measurement shall be made using the procedures specified in paragraphs (e)(1)(i) through (e)(1)(iii) of this section.

(i) The vent stream volumetric flow rate (FR_i) for a batch emission episode, in scmm at 20°C, shall be determined using Method 2, 2A, 2C, or 2D of 40 CFR part 60, appendix A, as appropriate.

* * * * *

(iii) The average batch vent flow rate for a batch emission episode shall be calculated using Equation 13. Where:

$$AFR_{episode} = \frac{\sum_{i=1}^{n} FR_i}{n} \qquad \text{[Eq. 13]}$$

$AFR_{episode}$ = Average batch vent flow rate for the batch emission episode, scmm.

FR_i = Flow rate for individual measurement i, scmm.

n = Number of flow rate measurements taken during the batch emission episode.

(2) The average batch vent flow rate for a batch emission episode may be determined by engineering assessment, as defined in paragraph (b)(6)(i) of this section. All data, assumptions, and procedures used shall be documented.

(3) The annual average batch vent flow rate for a batch front-end process vent shall be calculated using Equation 14.

$$AFR = \frac{\sum_{i=1}^{n} (DUR_i)(AFR_{episode,\,i})}{\sum_{i=1}^{n} (DUR_i)} \qquad \text{[Eq. 14]}$$

Where:

AFR = Annual average batch vent flow rate for the batch front-end process vent, scmm.

DUR_i = Duration of type i batch emission episodes annually, hr/yr.

$AFR_{episode,i}$ = Average batch vent flow rate for type i batch emission episode, scmm.

n = Number of types of batch emission episodes venting from the batch front-end process vent.

* * * * *

(g) *Group 1/Group 2 status determination.* The owner or operator shall compare the cutoff flow rate, calculated in accordance with paragraph (f) of this section, with the annual average batch vent flow rate, determined in accordance with paragraph (e)(3) of this section. The group determination status for each batch front-end process vent shall be made using the criteria specified in paragraphs (g)(1) and (g)(2) of this section.

(1) If the cutoff flow rate is greater than or equal to the annual average batch vent flow rate of the stream, the batch front-end process vent is classified as a Group 1 batch front-end process vent.

(2) If the cutoff flow rate is less than the annual average batch vent flow rate of the stream, the batch front-end process vent is classified as a Group 2 batch front-end process vent.

(h) * * *

(1) The concentration of each organic compound containing halogen atoms (ppmv, by compound) for each batch emission episode shall be determined after the last recovery device (if any recovery devices are present), based on any one of the following procedures:

* * * * *

(iii) Average concentration of organic compounds containing halogens and hydrogen halides as measured by Method 26 or 26A of 40 CFR part 60, appendix A.

(iv) Any other method or data that has been validated according to the applicable procedures in Method 301, 40 CFR part 63, appendix A.

(2) The annual mass emissions of halogen atoms for a batch front-end process vent shall be calculated using Equation 16.

$$E_{halogen} = K\left[\sum_{j=1}^{n}\sum_{i=1}^{m}\left(C_{avg_j}\right)\left(L_{j,i}\right)\left(M_{j,i}\right)\right]AFR \qquad \text{[Eq. 16]}$$

Where:

$E_{halogen}$ = Mass of halogen atoms, dry basis, kg/yr.

K = Constant, 0.022 $(ppmv)^{-1}$ (kg-mole per scm) (min/yr), where standard temperature is 20°C.

AFR = Annual average batch vent flow rate of the batch front-end process vent, determined according to paragraph (e) of this section, scmm.

$M_{j,i}$ = Molecular weight of halogen

atom i in compound j, kg/kg-mole.

$L_{j,i}$ = Number of atoms of halogen i in compound j.

n = Number of halogenated compounds j in the batch front-end process vent.

m = Number of different halogens i in each compound j of the batch front-end process vent.

C_{avgj} = Annual average batch vent concentration of halogenated compound j in the batch front-end process vent, as determined by using Equation 17, dry basis, ppmv, where:

$$C_{avg_j} = \frac{\sum_{i=1}^{n}(DUR_i)(C_i)}{\sum_{i=1}^{n}(DUR_i)} \quad \text{[Eq. 17]}$$

Where:

DUR_i = Duration of type i batch emission episodes annually, hr/yr.

C_i = Average batch vent concentration of halogenated compound j in type i batch emission episode, ppmv.

n = Number of types of batch emission episodes venting from the batch front-end process vent.

* * * * *

(i) *Process changes affecting Group 2 batch front-end process vents.* Whenever process changes, as described in paragraph (i)(1) of this section, are made that affect one or more Group 2 batch front-end process vents and that could reasonably be expected to change one or more Group 2 batch front-end process vents to Group 1 batch front-end process vents or that could reasonably be expected to reduce the batch mass input limitation for one or more Group 2 batch front-end process vents, the owner or operator of the affected source shall comply with paragraphs (i)(2) and (i)(3) of this section.

(1) Examples of process changes include the changes listed in paragraphs (i)(1)(i), (i)(1)(ii), and (i)(1)(iii) of this section.

(i) For all batch front-end process vents, examples of process changes include, but are not limited to, changes in feedstock type or catalyst type; or whenever there is replacement, removal, or modification of recovery equipment considered part of the batch unit operation as specified in paragraph (a)(2) of this section; or increases in production capacity or production rate. For purposes of this paragraph, process changes do not include: Process upsets; unintentional, temporary process changes; and changes that are within the margin of variation on which the original group determination was based.

(ii) For Group 2 batch front-end process vents where the group determination and batch mass input limitation are based on the expected mix of products, the situations described in paragraphs (i)(1)(ii)(A) and (B) of this section shall be considered to be process changes.

(A) The production of combinations of products not considered in establishing the batch mass input limitation.

(B) The production of a recipe of a product with a total mass of HAP charged to the reactor during the production of a single batch of product that is higher than the total mass of HAP for the recipe used as the single highest-HAP recipe for that product in the batch mass input limitation determination.

(iii) For Group 2 batch front-end process vents where the group determination and batch mass input limitation are based on the single highest-HAP recipe (considering all products produced or processed in the batch unit operation), the production of a recipe having a total mass of HAP charged to the reactor (during the production of a single batch of product) that is higher than the total mass of HAP for the highest-HAP recipe used in the batch mass input limitation determination shall be considered to be a process change.

(2) For each batch front-end process vent affected by a process change, the owner or operator shall redetermine the group status by repeating the procedures specified in paragraphs (b) through (g) of this section, as applicable. Alternatively, engineering assessment, as described in paragraph (b)(6)(i) of this section, may be used to determine the effects of the process change.

(3) Based on the results of paragraph (i)(2) of this section, owners or operators of affected sources shall comply with either paragraph (i)(3)(i), (ii), or (iii) of this section.

(i) If the group redetermination described in paragraph (i)(2) of this section indicates that a Group 2 batch front-end process vent has become a Group 1 batch front-end process vent as a result of the process change, the owner or operator of the affected source shall submit a report as specified in § 63.492(b) and shall comply with the Group 1 provisions in §§ 63.487 through 63.492 in accordance with § 63.480(i)(2)(ii) or (i)(2)(iii), as applicable.

(ii) If the redetermination described in paragraph (i)(2) of this section indicates that a Group 2 batch front-end process vent with annual emissions less than the applicable level specified in paragraph (d) of this section, and that is in compliance with § 63.487(g), now has annual emissions greater than or equal to the applicable level specified by paragraph (d) of this section but remains a Group 2 batch front-end process vent, the owner or operator of the affected source shall comply with the provisions in paragraphs (i)(3)(ii)(A) through (C) of this section.

(A) Redetermine the batch mass input limitation;

(B) Submit a report as specified in § 63.492(c); and

(C) Comply with § 63.487(f), beginning with the year following the submittal of the report submitted according to paragraph (i)(3)(ii)(B) of this section.

(iii) If the group redetermination described in paragraph (i)(2) of this section indicates no change in group status or no change in the relation of annual emissions to the levels specified in paragraph (d) of this section, the owner or operator of the affected source shall comply with paragraphs (i)(3)(iii)(A) and (i)(3)(iii)(B) of this section.

(A) The owner or operator shall redetermine the batch mass input limitation; and

(B) The owner or operator shall submit the new batch mass input limitation in accordance with § 63.492(c).

11. Section 63.489 is amended by:

a. Revising the section title;

b. Revising paragraph (a) introductory text;

c. Revising paragraph (a)(2);

d. Revising paragraph (b) introductory text;

e. Revising paragraph (b)(4) introductory text;

f. Revising paragraph (b)(4)(ii);

g. Revising paragraph (b)(7);

h. Revising paragraph (c) introductory text;

i. Revising paragraph (d) introductory text;

j. Revising paragraph (d)(2);

k. Revising paragraph (e)(1) introductory text;

l. Revising paragraph (e)(1)(ii);

m. Revising paragraph (e)(3); and

n. Removing paragraph (d)(3).

The revisions read as follows:

§ 63.489 Batch front-end process vents—monitoring equipment.

(a) *General requirements.* Each owner or operator of a batch front-end process vent or aggregate batch vent stream that uses a control device to comply with the requirements in § 63.487(a)(2) or § 63.487(b)(2) shall install the monitoring equipment specified in paragraph (b) of this section. All monitoring equipment shall be

installed, calibrated, maintained, and operated according to the manufacturer's specifications or other written procedures that provide adequate assurance that the equipment would reasonably be expected to monitor accurately.

* * * * *

(2) Except as otherwise provided in this subpart, the owner or operator shall operate control devices such that the daily average of monitored parameters, established as specified in paragraph (e) of this section, remains above the minimum level or below the maximum level, as appropriate.

(b) *Batch front-end process vent and aggregate batch vent stream monitoring equipment.* The monitoring equipment specified in paragraphs (b)(1) through (b)(8) of this section shall be installed as specified in paragraph (a) of this section. The parameters to be monitored are specified in Table 6 of this subpart.

* * * * *

(4) Where a scrubber is used with an incinerator, boiler, or process heater in concert with the combustion of halogenated batch front-end process vents or halogenated aggregate batch vent streams, the following monitoring equipment is required for the scrubber:

* * * * *

(ii) A flow measurement device equipped with a continuous recorder shall be located at the scrubber influent for liquid flow. Gas stream flow shall be determined using one of the procedures specified in paragraphs (b)(4)(ii)(A) through (b)(4)(ii)(C) of this section.

(A) The owner or operator may determine gas stream flow using the design blower capacity, with appropriate adjustments for pressure drop.

(B) If the scrubber is subject to regulations in 40 CFR parts 264 through 266 that have required a determination of the liquid to gas (L/G) ratio prior to the applicable compliance date for this subpart, the owner or operator may determine gas stream flow by the method that had been utilized to comply with those regulations. A determination that was conducted prior to the compliance date for this subpart may be utilized to comply with this subpart if it is still representative.

(C) The owner or operator may prepare and implement a gas stream flow determination plan that documents an appropriate method which will be used to determine the gas stream flow. The plan shall require determination of gas stream flow by a method which will at least provide a value for either a representative or the highest gas stream flow anticipated in the scrubber during representative operating conditions other than start-ups, shutdowns, or malfunctions. The plan shall include a description of the methodology to be followed and an explanation of how the selected methodology will reliably determine the gas stream flow, and a description of the records that will be maintained to document the determination of gas stream flow. The owner or operator shall maintain the plan as specified in § 63.506(a).

* * * * *

(7) Where a carbon adsorber is used, an integrating regeneration steam flow, nitrogen flow, or pressure monitoring device having an accuracy of ±10 percent of the flow rate, level, or pressure, or better, capable of recording the total regeneration steam flow or nitrogen flow, or pressure (gauge or absolute) for each regeneration cycle; and a carbon bed temperature monitoring device, capable of recording the carbon bed temperature after each regeneration and within 15 minutes of completing any cooling cycle are required.

* * * * *

(c) *Alternative monitoring parameters.* An owner or operator of a batch front-end process vent or aggregate batch vent stream may request approval to monitor parameters other than those required by paragraph (b) of this section. The request shall be submitted according to the procedures specified in § 63.492(e) and § 63.506(f). Approval shall be requested if the owner or operator:

* * * * *

(d) *Monitoring of bypass lines.* The owner or operator of a batch front-end process vent or aggregate batch vent stream using a vent system that contains bypass lines that could divert emissions away from a control device used to comply with § 63.487(a) or § 63.487(b) shall comply with either paragraph (d)(1) or (d)(2) of this section. Equipment such as low leg drains, high point bleeds, analyzer vents, open-ended valves or lines, and pressure relief valves needed for safety purposes are not subject to this paragraph (d).

* * * * *

(2) Secure the bypass line damper or valve in the non-diverting position with a car-seal or a lock-and-key type configuration. A visual inspection of the seal or closure mechanism shall be performed at least once every month to ensure that the damper or valve is maintained in the non-diverting position and emissions are not diverted through the bypass line. Records shall be generated as specified in § 63.491(e)(4).

(e) * * *

(1) For each parameter monitored under paragraph (b) or (c) of this section, the owner or operator shall establish a level, defined as either a maximum or minimum operating parameter as denoted in Table 7 of this subpart, that indicates proper operation of the control device. The level shall be established in accordance with the procedures specified in § 63.505. The level may be based upon a prior performance test conducted for determining compliance with a regulation promulgated by the EPA, and the owner or operator is not required to conduct a performance test under § 63.490, provided that the prior performance test meets the conditions of § 63.490(b)(3).

* * * * *

(ii) For aggregate batch vent streams using a control device to comply with § 63.487(b)(2), the established level shall reflect the emission reduction requirement of 90 percent specified in § 63.487(b)(2).

* * * * *

(3) The operating day shall be defined as part of establishing the parameter monitoring level and shall be submitted with the information in paragraph (e)(2) of this section. The definition of operating day shall specify the time(s) at which an operating day begins and ends. The operating day shall not exceed 24 hours.

12. Section 63.490 is amended by:

a. Revising paragraph (a);

b. Revising paragraph (b) introductory text;

c. Revising paragraph (b)(3);

d. Revising paragraph (b)(5);

e. Revising paragraph (c) introductory text;

f. Revising paragraph (c)(1)(i)(A);

g. Revising paragraph (c)(1)(i)(B) introductory text;

h. Revising paragraphs (c)(1)(i)(C) and (c)(1)(i)(D);

i. Revising paragraph (c)(1)(ii);

j. Revising paragraph (c)(1)(iii) introductory text;

k. Revising paragraph (c)(1)(iii)(A);

l. Revising paragraph (c)(1)(v);

m. Revising paragraph (c)(2) introductory text;

n. Revising paragraph (d)(1);

o. Revising paragraph (d)(2)(ii);

p. Revising paragraphs (d)(3) through (d)(5);

q. Revising paragraph (e);

r. Revising paragraph (f); and

s. Removing paragraph (b)(6).

The revisions read as follows:

§ 63.490 Batch front-end process vents—performance test methods and procedures to determine compliance.

(a) *Use of a flare.* When a flare is used to comply with § 63.487(a)(1) or § 63.487(b)(1), the owner or operator of an affected source shall comply with § 63.504(c).

(b) *Exceptions to performance tests.* An owner or operator is not required to conduct a performance test when a control device specified in paragraphs (b)(1) through (b)(5) of this section is used to comply with § 63.487(a)(2).

* * * * *

(3) A control device for which a performance test was conducted for determining compliance with a regulation promulgated by the EPA and the test was conducted using the same Methods specified in this section and either no deliberate process changes have been made since the test, or the owner or operator can demonstrate that the results of the performance test, with or without adjustments, reliably demonstrate compliance despite process changes.

* * * * *

(5) A hazardous waste incinerator for which the owner or operator has been issued a final permit under 40 CFR part 270 and complies with the requirements of 40 CFR part 264, subpart O, or has certified compliance with the interim status requirements of 40 CFR part 265, subpart O.

(c) *Batch front-end process vent testing and procedures for compliance with § 63.487(a)(2).* Except as provided in paragraph (a) or (b) of this section, an owner or operator using a control device to comply with § 63.487(a)(2) shall conduct a performance test using the procedures specified in paragraph (c)(1) of this section in order to determine the control efficiency of the control device. An owner or operator shall determine the percent reduction for the batch cycle using the control efficiency of the control device as specified in paragraphs (c)(2)(i) through (c)(2)(iii) of this section and the procedures specified in paragraph (c)(2) of this section. Compliance may be based on either total organic HAP or TOC. For purposes of this paragraph (c), the term "batch emission episode" shall have the meaning "period of the batch emission episode selected for control," which may be the entire batch emission episode or may only be a portion of the batch emission episode.

(1) * * *

(i) * * *

(A) Alternatively, an owner or operator may choose to test only those periods of the batch emission episode during which the emission rate for the entire episode can be determined or during which the emissions are greater than the average emission rate of the batch emission episode. The owner or operator choosing either of these options shall develop an emission profile for the entire batch emission episode, based on either process knowledge or test data collected, to demonstrate that test periods are representative. Examples of information that could constitute process knowledge include calculations based on material balances and process stoichiometry. Previous test results may be used, provided the results are still relevant to the current batch front-end process vent conditions.

(B) Method 1 or 1A, 40 CFR part 60, appendix A, as appropriate, shall be used for selection of the sampling sites if the flow measuring device is a pitot tube, except that references to particulate matter in Method 1A do not apply for the purposes of this subpart. No traverse is necessary when Method 2A or 2D, 40 CFR part 60, appendix A is used to determine gas stream volumetric flow rate. Inlet sampling sites shall be located as specified in paragraphs (c)(1)(i)(B)(*1*) and (c)(1)(i)(B)(*2*) of this section. Outlet sampling sites shall be located at the outlet of the final control device prior to release to the atmosphere.

* * * * *

(C) Gas stream volumetric flow rate and/or average batch vent flow rate shall be determined as specified in § 63.488(e).

(D) Method 18 or Method 25A of 40 CFR part 60, appendix A, shall be used to determine the concentration of organic HAP or TOC, as appropriate. Alternatively, any other method or data that has been validated according to the applicable procedures in Method 301, 40 CFR part 63, appendix A, may be used. The use of Method 25A, 40 CFR part 60, appendix A shall conform with the requirements in paragraphs (c)(1)(i)(D)(*1*) and (c)(1)(i)(D)(*2*) of this section.

(*1*) The organic HAP used as the calibration gas for Method 25A, 40 CFR part 60, appendix A shall be the single organic HAP representing the largest percent by volume of the emissions.

(*2*) The use of Method 25A, 40 CFR part 60, appendix A is acceptable if the response from the high-level calibration gas is at least 20 times the standard deviation of the response from the zero calibration gas when the instrument is zeroed on the most sensitive scale.

(ii) If an integrated sample is taken over the entire batch emission episode to determine the average batch vent concentration of TOC or total organic HAP, emissions per batch emission episode shall be calculated using Equations 18 and 19.

$$E_{episode,inlet} = K\left[\sum_{j=1}^{n}\left(C_{j,inlet}\right)\left(M_j\right)\right]\left(AFR_{inlet}\right)\left(T_h\right) \qquad \text{[Eq. 18]}$$

$$E_{episode,outlet} = K\left[\sum_{j=1}^{n}\left(C_{j,outlet}\right)\left(M_j\right)\right]\left(AFR_{outlet}\right)\left(T_h\right) \qquad \text{[Eq. 19]}$$

Where:

$E_{episode}$ = Inlet or outlet emissions, kg/episode.

K = Constant, 2.494×10^{-6} (ppmv)$^{-1}$ (gm-mole/scm) (kg/gm) (min/hr), where standard temperature is 20°C.

C_j = Average inlet or outlet concentration of TOC or sample organic HAP component j of the gas stream for the batch emission episode, dry basis, ppmv.

M_j = Molecular weight of TOC or sample organic HAP component j of the gas stream, gm/gm-mole.

AFR = Average inlet or outlet flow rate of gas stream for the batch emission episode, dry basis, scmm.

T_h = Hours/episode.

n = Number of organic HAP in stream. Note: Summation is not applicable if TOC emissions are being estimated using a TOC

§ 63.487(b)(2) shall conduct a performance test using the performance testing procedures for continuous front-end process vents in § 63.116(c).

(1) For the purposes of this subpart, when the provisions of § 63.116(c) specify that Method 18, 40 CFR part 60, appendix A shall be used, Method 18 or Method 25A, 40 CFR part 60, appendix A may be used. The use of Method 25A, 40 CFR part 60, appendix A shall conform with the requirements in paragraphs (e)(1)(i) and (e)(1)(ii) of this section.

(i) The organic HAP used as the calibration gas for Method 25A, 40 CFR part 60, appendix A shall be the single organic HAP representing the largest percent by volume of the emissions.

(ii) The use of Method 25A, 40 CFR part 60, appendix A is acceptable if the response from the high-level calibration gas is at least 20 times the standard deviation of the response from the zero calibration gas when the instrument is zeroed on the most sensitive scale.

(2) When § 63.116(c)(4) refers to complying with an emission reduction of 98 percent, for the purposes of this subpart, the 90 percent reduction requirement specified in § 63.487(b)(2) shall apply.

* * * * *

(f) *Batch mass input limitation.* The batch mass input limitation required by § 63.487(g)(1) shall be determined by the owner or operator such that annual emissions for the batch front-end process vent remain less than the level specified in § 63.488(d). The batch mass input limitation required by § 63.487(f)(1) shall be determined by the owner or operator such that annual emissions remain at a level that ensures that the batch front-end process vent remains a Group 2 batch front-end process vent, given the actual annual flow rate for that batch front-end process vent determined according to § 63.488(e)(3). The batch mass input limitation shall be determined using the same basis, as described in § 63.488(a)(1), used to make the group determination (*i.e.*, expected mix of products or highest-HAP recipe). The establishment of the batch mass input limitation is not dependent upon any past production or activity level.

(1) If the expected mix of products serves as the basis for the batch mass input limitation, the batch mass input limitation shall be determined based on any foreseeable combination of products that the owner or operator expects to manufacture.

(2) If the single highest-HAP recipe serves as the basis for the batch mass input limitation, the batch mass input limitation shall be determined based solely on the production of the single highest-HAP recipe, considering all products produced or processed in the batch unit operation.

13. Section 63.491 is amended by:

a. Revising paragraph (a) introductory text;

b. Revising paragraphs (a)(1) and (a)(2);

c. Revising paragraph (a)(3)(i);

d. Revising paragraph (a)(4);

e. Revising paragraphs (a)(7) through (a)(9);

f. Revising paragraph (b) introductory text;

g. Revising paragraphs (b)(1) and (b)(2);

h. Revising paragraphs (b)(3)(ii) and (b)(3)(iii);

i. Revising paragraph (b)(4)(iv);

j. Revising paragraphs (d)(1) and (d)(2);

k. Revising paragraph (e) introductory text;

l. Revising paragraphs (e)(1)(i) and (e)(1)(ii);

m. Revising paragraph (e)(2) introductory text;

n. Revising paragraphs (e)(2)(i) and (e)(2)(ii);

o. Revising paragraph (e)(3);

p. Revising paragraph (e)(4) introductory text;

q. Revising paragraph (e)(4)(i);

r. Revising paragraph (f);

s. Adding paragraph (g); and

t. Removing and reserving paragraph (e)(4)(ii).

The revisions and additions read as follows:

§ 63.491 Batch front-end process vents—recordkeeping requirements.

(a) *Group determination records for batch front-end process vents.* Except as provided in paragraphs (a)(7) and (a)(8) of this section, each owner or operator of an affected source shall maintain the records specified in paragraphs (a)(1) through (a)(6) of this section for each batch front-end process vent subject to the group determination procedures of § 63.488. Except for paragraph (a)(1) of this section, the records required to be maintained by this paragraph are limited to the information developed and used to make the group determination under §§ 63.488(b) through 63.488(g), as appropriate. If an owner or operator did not need to develop certain information (*e.g.*, annual average batch vent flow rate) to determine the group status, this paragraph does not require that additional information be developed. Paragraph (a)(9) of this section specifies the recordkeeping requirements for Group 2 batch front-end process vents that are exempt from the batch mass input limitation provisions, as allowed under § 63.487(h).

(1) An identification of each unique product that has emissions from one or more batch emission episodes venting from the batch front-end process vent, along with an identification of the single highest-HAP recipe for each product and the mass of HAP fed to the reactor for that recipe.

(2) A description of, and an emission estimate for, each batch emission episode, and the total emissions associated with one batch cycle, as described in either paragraph (a)(2)(i) or (a)(2)(ii) of this section, as appropriate.

(i) If the group determination is based on the expected mix of products, records shall include the emission estimates for the single highest-HAP recipe of each unique product identified in paragraph (a)(1) of this section that was considered in making the group determination under § 63.488.

(ii) If the group determination is based on the single highest-HAP recipe (considering all products produced or processed in the batch unit operation), records shall include the emission estimates for the single highest-HAP recipe.

(3) * * *

(i) For Group 2 batch front-end process vents, emissions shall be determined at the batch mass input limitation.

* * * * *

(4) The annual average batch vent flow rate for the batch front-end process vent as determined in accordance with § 63.488(e).

* * * * *

(7) If a batch front-end process vent is subject to § 63.487(a) or § 63.487(b), none of the records in paragraphs (a)(1) through (a)(6) of this section are required.

(8) If the total annual emissions from the batch front-end process vent during the group determination are less than the appropriate level specified in § 63.488(d), only the records in paragraphs (a)(1) through (a)(3) of this section are required.

(9) For each Group 2 batch front-end process vent that is exempt from the batch mass input limitation provisions because it meets the criteria of § 63.487(h), the records specified in paragraphs (a)(9)(i) and (ii) shall be maintained.

(i) Documentation of the maximum design capacity of the EPPU; and

(ii) The mass of HAP or material that can be charged annually to the batch unit operation at the maximum design capacity.

(b) *Compliance demonstration records.* Each owner or operator of a batch front-end process vent or aggregate batch vent stream complying with § 63.487(a) or (b), shall keep the following records, as applicable, readily accessible:

(1) The annual mass emissions of halogen atoms in the batch front-end process vent or aggregate batch vent stream determined according to the procedures specified in § 63.488(h).

(2) If the owner or operator of a batch front-end process vent has chosen to comply with § 63.487(a)(2), records documenting the batch cycle percent reduction as specified in § 63.490(c)(2).

(3) * * *

(ii) All visible emission readings, heat content determinations, flow rate measurements, and exit velocity determinations made during the compliance determination required by § 63.504(c); and

(iii) Periods when all pilot flames were absent.

(4) * * *

(iv) For a scrubber or other halogen reduction device following a combustion device to control halogenated batch front-end process vents or halogenated aggregate batch vent streams, the percent reduction of total hydrogen halides and halogens, as determined under § 63.490(d)(3) or the emission limit determined under § 63.490(d)(4).

* * * * *

(d) * * *

(1) The owner or operator of a Group 2 batch front-end process vent required to comply with § 63.487(g) shall keep the following records readily accessible:

(i) Records designating the established batch mass input limitation required by § 63.487(g)(1) and specified in § 63.490(f).

(ii) Records specifying the mass of HAP or material charged to the batch unit operation.

(2) The owner or operator of a Group 2 batch front-end process vent complying with § 63.487(f) shall keep the following records readily accessible:

(i) Records designating the established batch mass input limitation required by § 63.487(f)(1) and specified in § 63.490(f).

(ii) Records specifying the mass of HAP or material charged to the batch unit operation.

(e) *Controlled batch front-end process vent continuous compliance records.* Each owner or operator of a batch front-end process vent that has chosen to use a control device to comply with § 63.487(a) shall keep the following records readily accessible:

(1) * * *

(i) For flares, the records specified in Table 6 of this subpart shall be maintained in place of continuous records.

(ii) For carbon adsorbers, the records specified in Table 6 of this subpart shall be maintained in place of batch cycle daily averages.

(2) Records of the batch cycle daily average value of each continuously monitored parameter, except as provided in paragraphs (e)(2)(iii) of this section, as calculated using the procedures specified in paragraphs (e)(2)(i) and (e)(2)(ii) of this section.

(i) The batch cycle daily average shall be calculated as the average of all parameter values measured for an operating day during those batch emission episodes, or portions thereof, in the batch cycle that the owner or operator has selected to control.

(ii) Monitoring data recorded during periods of monitoring system breakdowns, repairs, calibration checks, and zero (low-level) and high-level adjustments shall not be included in computing the batch cycle daily averages. In addition, monitoring data recorded during periods of non-operation of the EPPU (or specific portion thereof) resulting in cessation of organic HAP emissions, or periods of start-up, shutdown, or malfunction shall not be included in computing the batch cycle daily averages.

* * * * *

(3) Hourly records of whether the flow indicator for bypass lines specified under § 63.489(d)(1) was operating and whether a diversion was detected at any time during the hour. Also, records of the times of all periods when the vent is diverted from the control device, or the flow indicator specified in § 63.489(d)(1) is not operating.

(4) Where a seal or closure mechanism is used to comply with § 63.489(d)(2), hourly records of whether a diversion was detected at any time are not required.

(i) For compliance with § 63.489(d)(2), the owner or operator shall record whether the monthly visual inspection of the seals or closure mechanism has been done, and shall record the occurrence of all periods when the seal mechanism is broken, the bypass line damper or valve position has changed, or the key for a lock-and-key type configuration has been checked out, and records of any car-seal that has been broken.

(ii) [Reserved.]

* * * * *

(f) *Aggregate batch vent stream continuous compliance records.* In addition to the records specified in paragraphs (b) and (c) of this section, each owner or operator of an aggregate batch vent stream using a control device to comply with § 63.487(b)(1) or (b)(2) shall keep the following records readily accessible:.

(1) Continuous records of the equipment operating parameters specified to be monitored under § 63.489(b) and listed in Table 6 of this subpart, as applicable, or specified by the Administrator in accordance with § 63.492(e), as allowed under § 63.489(c), with the exceptions listed in paragraphs (f)(1)(i) and (f)(1)(ii) of this section.

(i) For flares, the records specified in Table 6 of this subpart shall be maintained in place of continuous records.

(ii) For carbon adsorbers, the records specified in Table 6 of this subpart shall be maintained in place of daily averages.

(2) Records of the daily average value of each continuously monitored parameter for each operating day determined according to the procedures specified in § 63.506(d).

(3) For demonstrating compliance with the monitoring of bypass lines as specified in § 63.489(d), records as specified in paragraph (e)(3) or (e)(4) of this section, as appropriate.

(g) Documentation supporting the establishment of the batch mass input limitation shall include the information specified in paragraphs (g)(1) through (g)(5) of this section, as appropriate.

(1) Identification of whether the purpose of the batch mass input limitation is to comply with § 63.487(f)(1) or (g)(1).

(2) Identification of whether the batch mass input limitation is based on the single highest-HAP recipe (considering all products) or on the expected mix of products for the batch front-end process vent as allowed under § 63.488(a)(1).

(3) Definition of the operating year, for the purposes of determining compliance with the batch mass input limitation.

(4) If the batch mass input limitation is based on the expected mix of products, the owner or operator shall provide documentation that describes as many scenarios for differing mixes of products (*i.e.*, how many of each type of product) as the owner or operator desires the flexibility to accomplish. Alternatively, the owner or operator shall provide a description of the relationship among the mix of products that will allow a determination of compliance with the batch mass input limitation under any number of scenarios.

(5) The mass of HAP or material allowed to be charged to the batch unit operation per year under the batch mass input limitation.

14. Section 63.492 is amended by:

a. Revising paragraph (a) introductory text;

b. Revising paragraph (b);

c. Revising paragraph (c) introductory text;

d. Revising paragraph (c)(2);

e. Revising paragraph (d);

f.

Revising paragraph (e);

g. Revising paragraph (f);

h. Adding paragraphs (a)(5) and (a)(6); and

i. Removing paragraph (c)(3).

The revisions and additions read as follows:

§ 63.492 Batch front-end process vents—reporting requirements.

(a) The owner or operator of a batch front-end process vent or aggregate batch vent stream at an affected source shall submit the information specified in paragraphs (a)(1) through (a)(6) of this section, as appropriate, as part of the Notification of Compliance Status specified in § 63.506(e)(5).

* * * * *

(5) For each Group 2 batch front-end process vent that is exempt from the batch mass input limitation provisions because it meets the criteria of § 63.487(h), the information specified in § 63.491(a)(1) through (3), and the information specified in § 63.491(a)(4) through (6) as applicable, calculated at the conditions specified in § 63.487(h).

(6) When engineering assessment has been used to estimate emissions from a batch emissions episode and the criteria specified in § 63.488(b)(6)(i)(A) or (B) have been met, the owner or operator shall submit the information demonstrating that the criteria specified in § 63.488(b)(6)(i)(A) or (B) have been met as part of the Notification of Compliance Status required by § 63.506(e)(5).

(b) Whenever a process change, as defined in § 63.488(i)(1), is made that causes a Group 2 batch front-end process vent to become a Group 1 batch front-end process vent, the owner or operator shall notify the Administrator and submit a description of the process change within 180 days after the process change is made or with the next Periodic Report, whichever is later. The owner or operator of an affected source shall comply with the Group 1 batch front-end process vent provisions in §§ 63.486 through 63.492 in accordance with § 63.480(i)(2)(ii).

(c) Whenever a process change, as defined in § 63.488(i)(1), is made that causes a Group 2 batch front-end process vent with annual emissions less than the level specified in § 63.488(d) for which the owner or operator is required to comply with § 63.487(g) to have annual emissions greater than or equal to the level specified in § 63.488(d) but remains a Group 2 batch front-end process vent, or if a process change is made that requires the owner or operator to redetermine the batch mass input limitation as specified in § 63.488(i)(3), the owner or operator shall submit a report within 180 days after the process change is made or with the next Periodic Report, whichever is later. The following information shall be submitted:

* * * * *

(2) The batch mass input limitation determined in accordance with § 63.487(f)(1).

(d) The owner or operator is not required to submit a report of a process change if one of the conditions specified in paragraphs (d)(1) or (d)(2) of this section is met.

(1) The change does not meet the description of a process change in § 63.488(i).

(2) The redetermined group status remains Group 2 for an individual batch front-end process vent with annual emissions greater than or equal to the level specified in § 63.488(d) and the batch mass input limitation does not decrease, or a Group 2 batch front-end process vent with annual emissions less than the level specified in § 63.488(d) complying with § 63.487(g) continues to have emissions less than the level specified in § 63.488(d) and the batch mass input limitation does not decrease.

(e) If an owner or operator uses a control device other than those specified in § 63.489(b) and listed in Table 6 of this subpart or requests approval to monitor a parameter other than those specified in § 63.489(b) and listed in Table 6 of this subpart, the owner or operator shall submit a description of planned reporting and recordkeeping procedures, as specified in § 63.506(f), as part of the Precompliance Report as required under § 63.506(e)(3). The Administrator will specify appropriate reporting and recordkeeping requirements as part of the review of the Precompliance Report.

(f) Owners or operators of affected sources complying with § 63.489(d), shall comply with paragraph (f)(1) or (f)(2) of this section, as appropriate.

(1) Submit reports of the times of all periods recorded under § 63.491(e)(3) when the batch front-end process vent is diverted away from the control device through a bypass line, with the next Periodic Report.

(2) Submit reports of all occurrences recorded under § 63.491(e)(4) in which the seal mechanism is broken, the bypass line damper or valve position has changed, or the key to unlock the bypass line damper or valve was checked out, with the next Periodic Report.

15. Section 63.493 is revised to read as follows:

§ 63.493 Back-end process provisions.

Owners and operators of new and existing affected sources shall comply with the requirements in §§ 63.494 through 63.500. Owners and operators of affected sources whose only elastomer products are latex products, liquid rubber products, or products produced in a gas-phased reaction process are not subject to the provisions of §§ 63.494 through 63.500. If latex or liquid rubber products are produced in an affected source that also produces another elastomer product, the provisions of §§ 63.484 through 63.500 do not apply to the back-end operations dedicated to the production of one or more latex products or to the back-end operations during the production of a latex product. Section 63.494 contains residual organic HAP limitations. Compliance with these residual organic HAP limitations may be achieved by using either stripping technology, or by using control or recovery devices. If compliance with these limitations is achieved using stripping technology, the procedures to determine compliance are specified in § 63.495. If compliance with these limitations is achieved using control or recovery devices, the procedures to determine compliance are specified in § 63.496, and associated monitoring requirements are specified in § 63.497. Recordkeeping requirements are contained in § 63.498, and reporting requirements in § 63.499. Section 63.500 contains a limitation on carbon disulfide emissions from affected sources that produce styrene butadiene rubber using an emulsion process. Table 8 to this subpart contains a summary of compliance alternative requirements for these sections.

16. Section 63.494 is amended by:

a. Revising paragraph (a) introductory text;

b. Revising paragraphs (a)(1)(i), (a)(2)(i) and (a)(3)(i);

c. Revising paragraph (a)(4); and

d. Adding paragraph (d).

The revisions and additions read as follows:

§ 63.494 Back-end process provisions—residual organic HAP limitations.

(a) The monthly weighted average residual organic HAP content of all

grades of elastomer processed, measured after the stripping operation [or the reactor(s), if the plant has no stripper(s)] as specified in § 63.495(d), shall not exceed the limits provided in paragraphs (a)(1) through (a)(4) of this section, as applicable. Owners or operators of affected sources shall comply with the requirements of this paragraph using either stripping technology or control or recovery devices.

(1) * * *

(i) A monthly weighted average of 0.40 kg styrene per megagram (Mg) latex for existing affected sources; and

* * * * *

(2) * * *

(i) A monthly weighted average of 10 kg total organic HAP per Mg crumb rubber (dry weight) for existing affected sources; and

* * * * *

(3) * * *

(i) A monthly weighted average of 8 kg total organic HAP per Mg crumb rubber (dry weight) for existing affected sources; and

* * * * *

(4) There are no back-end process operation residual organic HAP limitations for neoprene, Hypalon™, nitrile-butadiene rubber, butyl rubber, halobutyl rubber, epichlorohydrin elastomer, and polysulfide rubber. There are also no back-end process operation residual organic HAP limitations for latex products, liquid rubber products, products produced in a gas-phased reaction process, styrene butadiene rubber produced by any process other than a solution or emulsion process, polybutadiene rubber produced by any process other than a solution process, or ethylene-propylene rubber produced by any process other than a solution process.

* * * * *

(d) If the owner or operator complies with the residual organic HAP limitations in paragraph (a) of this section using a flare, the owner or operator of an affected source shall comply with the requirements in § 63.504(c).

17. Section 63.495 is amended by:

a. Revising paragraphs (b)(2)(i) and (b)(2)(ii);

b. Revising paragraph (b)(5); and

c. Revising paragraph (f).

The revisions read as follows:

§ 63.495 Back-end process provisions—procedures to determine compliance using stripping technology.

* * * * *

(b) * * *

(2) * * *

(i) If a stripper operated in batch mode is used, at least one representative sample is to be taken from every batch of elastomer produced, at the location specified in paragraph (d) of this section, and identified by elastomer type and by the date and time the batch is completed.

(ii) If a stripper operated in continuous mode is used, at least one representative sample is to be taken each operating day. The sample is to be taken at the location specified in paragraph (d) of this section, and identified by elastomer type and by the date and time the sample was taken.

* * * * *

(5) The monthly weighted average shall be determined using the equation in paragraph (f) of this section. All samples taken and analyzed during the month shall be used in the determination of the monthly weighted average, except samples taken during periods of start-up, shutdown, or malfunction.

* * * * *

(f) The monthly weighted average residual organic HAP content shall be calculated using Equation 26.

$$HAPCONT_{avg,mo} = \frac{\sum_{i-1}^{n}(C_i)(P_i)}{P_{mo}} \qquad \text{[Eq. 26]}$$

Where:

$HAPCONT_{avg,mo}$ = Monthly weighted average organic HAP content for all rubber processed at the affected source, kg organic HAP per Mg latex or dry crumb rubber.

n = Number of samples in the month.

C_i = Residual organic HAP content of sample i, determined in accordance with paragraph (b)(3) or (c)(3) of this section, kg organic HAP per Mg latex or dry crumb rubber.

P_i = Weight of latex or dry crumb rubber represented by sample i.

P_{mo} = Weight of latex or dry crumb rubber (Mg) processed in the month.

18. Section 63.496 is amended by:

a. Revising paragraph (b) introductory text;

b. Revising paragraph (b)(5)(i);

c. Revising paragraph (b)(5)(iii);

d. Revising paragraph (b)(6)(iv);

e. Revising paragraph (b)(7) introductory text;

f. Revising paragraph (b)(7)(i);

g. Revising paragraph (b)(7)(iv);

h. Revising paragraph (b)(8) introductory text;

i. Revising paragraph (c)(1); and

j. Adding paragraph (b)(7)(vi).

The revisions and additions read as follows:

§ 63.496 Back-end process provisions—procedures to determine compliance using control or recovery devices.

* * * * *

(b) Compliance shall be demonstrated using the provisions in paragraphs (b)(1) through (b)(8) of this section, as applicable.

* * * * *

(5) * * *

(i) Method 1 or 1A of 40 CFR part 60, appendix A, as appropriate, shall be used for selection of the sampling sites. Sampling sites for inlet emissions shall be located as specified in paragraphs (b)(5)(i)(A) or (b)(5)(i)(B) of this section. Sampling sites for outlet emissions shall be located at the outlet of the control or recovery device.

(A) The inlet sampling site shall be located at the exit of the back-end process unit operation before any opportunity for emission to the atmosphere [with the exception of equipment in compliance with the requirements in §§ 63.502(a) through 63.502(m)], and before any control or recovery device.

(B) If back-end process vent streams are combined prior to being routed to control or recovery devices, the inlet sampling site may be for the combined stream, as long as there is no opportunity for emission to the atmosphere [with the exception of equipment in compliance with the requirements in §§ 63.502(a) through 63.502(m)] from any of the streams prior to being combined.

* * * * *

(iii) To determine the inlet and outlet total organic HAP concentrations, the owner or operator shall use Method 18 or Method 25A of 40 CFR part 60, appendix A. Alternatively, any other method or data that has been validated according to the applicable procedures in Method 301, 40 CFR part 63,

appendix A may be used. The minimum sampling time for each run shall be in accordance with paragraph (b)(1) of this section, during which either an integrated sample or grab samples shall be taken. If grab sampling is used, then the samples shall be taken at approximately equal intervals during the run, with the time between samples no greater than 15 minutes.

* * * * *

(6) * * *

(iv) The outlet total organic HAP emissions associated with the back-end process unit operation shall be calculated using Equation 30, as shown in paragraph (b)(8) of this section.

(7) An owner or operator is not required to conduct a source test to determine the outlet organic HAP emissions if any control device specified in paragraphs (b)(7)(i) through (b)(7)(vi) of this section is used. For these devices, the inlet emissions associated with the back-end process unit operation shall be determined in accordance with paragraph (b)(5) of this section, and the outlet emissions shall be calculated using the equation in paragraph (b)(8) of this section.

(i) A flare. The owner or operator shall demonstrate compliance as provided in § 63.504(c).

* * * * *

(iv) A control device for which a performance test was conducted for determining compliance with a regulation promulgated by the EPA and the test was conducted using the same Methods specified in this section and either no deliberate process changes have been made since the test, or the owner or operator can demonstrate that the results of the performance test, with or without adjustments, reliably demonstrate compliance despite process changes.

* * * * *

(vi) A hazardous waste incinerator for which the owner or operator has been issued a final permit under 40 CFR Part 270 and complies with the requirements of 40 CFR part 264, subpart O, or has certified compliance with the interim status requirements of 40 CFR part 265, subpart O.

(8) If one of the control devices listed in paragraph (b)(6) or (b)(7) of this section is used, the outlet emissions shall be calculated using Equation 30.

$$E_o = E_i (1 - R) \qquad \text{[Eq. 30]}$$

where:

E_o = Mass rate of total organic HAP at the outlet of the control or recovery device, dry basis, kg/hr.

E_i = Mass rate of total organic HAP at the inlet of the control or recovery device, dry basis, kg/hr, determined using the procedures in paragraph (b)(5)(iv) of this section.

R = Control efficiency of control device, as specified in paragraph (b)(8)(i), (ii), or (iii) of this section.

* * * * *

(c) * * *

(1) For each test run, the residual organic HAP content, adjusted for the control or recovery device emission reduction, shall be calculated using Equation 31.

$$\text{HAPCONT}_{run} = \frac{(C)(P) - \left(E_{i,run}\right) + \left(E_{o,run}\right)}{(P)} \qquad \text{[Eq. 31]}$$

Where:

HAPCONT_{run} = Residual organic HAP content, kg organic HAP per kg elastomer (latex or dry crumb rubber).

C = Total uncontrolled organic HAP content, determined in accordance with paragraph (b)(3) of this section, kg organic HAP per kg latex or dry crumb rubber.

P = Weight of latex or dry crumb rubber processed during test run.

$E_{i,run}$ = Mass rate of total organic HAP at the inlet of the control or recovery device, dry basis, kg per test run.

$E_{o,run}$ = Mass rate of total organic HAP at the outlet of the control or recovery device, dry basis, kg per test run.

* * * * *

19. Section 63.497 is amended by:

a. Revising paragraph (a) introductory text;

b. Revising paragraph (a)(6);

c. Revising paragraph (c);

d. Revising paragraph (d) introductory text; and

e. Removing paragraph (d)(3).

The revisions read as follows:

§ 63.497 Back-end process provisions—monitoring provisions for control and recovery devices.

(a) An owner or operator complying with the residual organic HAP limitations in § 63.494(a) using control or recovery devices, or a combination of stripping and control or recovery devices, shall install the monitoring equipment specified in paragraphs (a)(1) through (a)(6) of this section, as appropriate.

* * * * *

(6) For a carbon adsorber, an integrating regeneration steam flow, nitrogen flow, or pressure monitoring device having an accuracy of at least ±10 percent of the flow rate, level, or pressure, capable of recording the total regeneration steam flow or nitrogen flow, or pressure (gauge or absolute) for each regeneration cycle; and a carbon bed temperature monitoring device, capable of recording the carbon bed temperature after each regeneration and within 15 minutes of completing any cooling cycle are required.

* * * * *

(c) The owner or operator shall establish a level, defined as either a maximum or minimum operating parameter, that indicates proper operation of the control or recovery device for each parameter monitored under paragraphs (a)(1) through (a)(6) of this section. This level is determined in accordance with § 63.505. The established level, along with supporting documentation, shall be submitted in the Notification of Compliance Status or the operating permit application, as required in § 63.506(e)(5) or (e)(8), respectively. The owner or operator shall operate control and recovery devices so that the daily average value is above or below the established level, as required, to ensure continued compliance with the standard, except as otherwise stated in this subpart.

(d) The owner or operator of an affected source with a controlled back-end process vent using a vent system that contains bypass lines that could divert a vent stream away from the control or recovery device used to comply with § 63.494(a) shall comply with paragraph (d)(1) or (d)(2) of this section. Equipment such as low leg drains, high point bleeds, analyzer vents, open-ended valves or lines, and pressure relief valves needed for safety purposes are not subject to this paragraph.

* * * * *

20. Section 63.498 is amended by:

a. Revising paragraph (a);

b. Revising paragraph (d) introductory text;

c. Revising paragraphs (d)(1) through (d)(4);

d. Revising paragraph (d)(5) introductory text;

e. Revising paragraph (d)(5)(i);

f. Revising paragraph (d)(5)(ii)(B);

g. Revising paragraph (d)(5)(iv) introductory text;

h. Revising paragraph (d)(5)(iv)(A); and

i. Removing and reserving paragraph (d)(5)(iv)(B).

The revisions read as follows:

§ 63.498 Back-end process provisions—recordkeeping.

(a) Each owner or operator shall maintain the records specified in paragraphs (b) through (d) of this section, as appropriate.

* * * * *

(d) Each owner or operator of a back-end process operation using control or recovery devices to comply with an organic HAP emission limitation in § 63.494(a) shall maintain the records specified in paragraphs (d)(1) through (d)(5) of this section. The recordkeeping requirements contained in paragraphs (d)(1) through (d)(4) pertain to the results of the testing required by § 63.496(b), for each of the three required test runs.

(1) The uncontrolled residual organic HAP content in the latex or dry crumb rubber, as required to be determined by § 63.496(b)(3), including the test results of the analysis;

(2) The total quantity of material (weight of latex or dry crumb rubber) processed during the test run, recorded in accordance with § 63.496(b)(4);

(3) The organic HAP emissions at the inlet and outlet of the control or recovery device, determined in accordance with § 63.496(b)(5) through (b)(8), including all test results and calculations.

(4) The residual organic HAP content, adjusted for the control or recovery device emission reduction, determined in accordance with § 63.496(c)(1).

(5) Each owner or operator using a control or recovery device shall keep the following records readily accessible:

(i) Continuous records of the equipment operating parameters specified to be monitored under § 63.497(a) or specified by the Administrator in accordance with § 63.497(b). For flares, the records specified in Table 3 of 40 CFR part 63, subpart G shall be maintained in place of continuous records.

(ii) * * *

(B) Monitoring data recorded during periods of monitoring system breakdowns, repairs, calibration checks, and zero (low-level) and high-level adjustments shall not be included in computing the hourly or daily averages. In addition, monitoring data recorded during periods of non-operation of the EPPU (or specific portion thereof) resulting in cessation of organic HAP emissions or during periods of start-up, shutdown, or malfunction shall not be included in computing the hourly or daily averages. Records shall be kept of the times and durations of all such periods and any other periods of process or control device operation when monitors are not operating.

* * * * *

(iv) Where a seal mechanism is used to comply with § 63.497(d)(2), hourly records of flow are not required.

(A) For compliance with § 63.497(d)(2), the owner or operator shall record whether the monthly visual inspection of the seals or closure mechanisms has been done, and shall record instances when the seal mechanism is broken, the bypass line damper or valve position has changed, or the key for a lock-and-key type configuration has been checked out, and records of any car-seal that has broken.

(B) [Reserved]

21. Section 63.499 is amended by:

a. Revising paragraph (a);

b. Revising paragraph (b)(2);

c. Revising paragraph (c) introductory text;

d. Revising paragraph (c)(3); and

e. Revising paragraph (d) introductory text.

The revisions read as follows:

§ 63.499 Back-end process provisions—reporting.

(a) The owner or operator of an affected source with back-end process operations shall submit the information required in paragraphs (a)(1) through (a)(3) of this section, for each back-end process operation at the affected source, as part of the Notification of Compliance Status specified in § 63.506(e)(5).

(1) The type of elastomer product processed in the back-end operation.

(2) The type of process (solution process, emulsion process, etc.)

(3) If the back-end process operation is subject to an emission limitation in § 63.494(a), whether compliance will be achieved by stripping technology, or by control or recovery devices.

(b) * * *

(2) For organic HAP content/stripper monitoring parameter re-determinations, and the addition of new grades, the information specified in § 63.498(c)(1) shall be submitted in the next periodic report specified in § 63.506(e)(6).

(c) Each owner or operator of an affected source with a back-end process operation control or recovery device that shall comply with an emission limitation in § 63.494(a) shall submit the information specified in paragraphs (c)(1) through (c)(3) of this section as part of the Notification of Compliance Status specified in § 63.506(e)(5).

* * * * *

(3) The information specified in paragraphs (c)(3)(i) when using a flare, and the information specified in paragraph (c)(3)(ii) of this section when using a boiler or process heater.

(i) The flare design (*i.e.*, steam-assisted, air-assisted, or non-assisted); all visible emission readings, heat content determinations, flow rate measurements, and exit velocity determinations made during the compliance determination; and all periods during the compliance determination when the pilot flame is absent.

(ii) A description of the location at which the vent stream is introduced into the boiler or process heater.

(d) Whenever a process change, as defined in § 63.496(d), is made that causes the redetermination of the compliance status for the back-end process operations, the owner or operator shall submit a report within 180 days after the process change as specified in § 63.506(e)(7)(iii). The report shall include:

* * * * *

22. Section 63.500 is amended by:

a. Revising paragraph (a)(3);

b. Revising paragraph (c)(1) introductory text;

c. Revising paragraph (c)(1)(iii) introductory text;

d. Revising paragraph (c)(2) introductory text; and

e. Revising paragraph (d)(2).

The revisions read as follows:

§ 63.500 Back-end process provisions—carbon disulfide limitations for styrene butadiene rubber by emulsion processes.

(a) * * *

(3) The owner or operator shall operate the process in accordance with a validated standard operating procedure at all times when styrene butadiene rubber is being produced using a sulfur containing shortstop agent. If a standard operating procedure is changed, it shall be re-validated.

* * * * *

(c) * * *

(1) The owner or operator may choose to conduct a performance test, using the procedures in paragraphs (c)(1)(i) through (c)(1)(iii) of this section to demonstrate compliance with the

carbon disulfide concentration limitation in paragraph (a) of this section. One test shall be conducted for each standard operating procedure.

* * * * *

(iii) To determine compliance with the carbon disulfide concentration limit in paragraph (a) of this section, the owner or operator shall use Method 18 or Method 25A of 40 CFR part 60, appendix A to measure carbon disulfide. Alternatively, any other method or data that has been validated according to the applicable procedures in Method 301, 40 CFR part 63, appendix A, may be used. The following procedures shall be used to calculate carbon disulfide concentration:

* * * * *

(2) The owner or operator may use engineering assessment to demonstrate compliance with the carbon disulfide concentration limitation in paragraph (a) of this section. Engineering assessment includes, but is not limited to, the following:

* * * * *

(d) * * *

(2) A description of the standard operating procedure used during the testing. This description shall include, at a minimum, an identification of the sulfur containing shortstop agent added to the styrene butadiene rubber prior to the dryers, an identification of the point and time in the process where the sulfur containing shortstop agent is added, and an identification of the amount of sulfur containing shortstop agent added per unit of latex.

* * * * *

23. Section 63.501 is amended by:

a. Revising paragraph (a);

b. Revising paragraph (b);

c. Revising paragraph (c)(1); and

d. Removing paragraph (d).

The revisions read as follows:

§ 63.501 Wastewater provisions.

(a) Except as specified in paragraph (c) of this section, the owner or operator of each affected source shall comply with the requirements of §§ 63.132 through 63.147 for each process wastewater stream originating at an affected source, with the requirements of § 63.148 for leak inspection provisions, and with the requirements of § 63.149 for equipment that is subject to § 63.149, with the differences noted in paragraphs (a)(1) through (a)(23) of this section. Further, the owner or operator of each affected source shall comply with the requirements of § 63.105(a) for maintenance wastewater, as specified in paragraph (b) of this section.

(1) When the determination of equivalence criteria in § 63.102(b) is referred to in §§ 63.132, 63.133, and 63.137, the provisions in § 63.6(g) shall apply for the purposes of this subpart.

(2) When the storage vessel requirements contained in §§ 63.119 through 63.123 are referred to in §§ 63.132 through 63.149, §§ 63.119 through 63.123 are applicable, with the exception of the differences referred to in § 63.484, for the purposes of this subpart.

(3) Owners and operators of affected sources are not required to comply with the requirements in § 63.132(b)(1) and § 63.132(d). Owners and operators of new affected sources, as defined in this subpart, shall comply with the requirements for existing sources in §§ 63.132 through 63.149, with the exceptions noted in paragraphs (a)(4), (a)(10), and (a)(23) of this section.

(4) When § 63.146(a) requires the submission of a request for approval to monitor alternative parameters according to the procedures specified in § 63.151(f) or (g), owners or operators requesting to monitor alternative parameters shall follow the procedures specified in § 63.506(f), for the purposes of this subpart.

(5) When § 63.147(d) requires owners or operators to keep records of the daily average value of each continuously monitored parameter for each operating day as specified in § 63.152(f), owners and operators shall instead keep records of the daily average value of each continuously monitored parameter as specified in § 63.506(d), for the purposes of this subpart.

(6) When §§ 63.132 through 63.149 refer to an "existing source," the term "existing affected source," as defined in § 63.480(a)(3) shall apply, for the purposes of this subpart.

(7) When §§ 63.132 through 63.149 refer to a "new source," the term "new affected source," as defined in § 63.480(a)(4) shall apply, for the purposes of this subpart.

(8) Whenever §§ 63.132 through 63.149 refer to a "chemical manufacturing process unit," the term "elastomer product process unit," (or EPPU) as defined in § 63.482, shall apply for the purposes of this subpart. In addition, when § 63.149 refers to "a chemical manufacturing process unit that meets the criteria of § 63.100(b) of subpart F of this part," the term "an EPPU as defined in § 63.482(b)" shall apply for the purposes of this subpart.

(9) When § 63.132(a) and (b) refer to the "applicable dates specified in § 63.100 of subpart F of this part," the compliance dates specified in § 63.481 shall apply, for the purposes of this subpart.

(10) The provisions of paragraphs (a)(10)(i), (a)(10)(ii), and (a)(10)(iii) of this section clarify the organic HAP that an owner or operator shall consider when complying with the requirements of §§ 63.132 through 63.149.

(i) Owners and operators are exempt from all requirements in §§ 63.132 through 63.149 that pertain solely and exclusively to organic HAP listed on table 8 of 40 CFR part 63, subpart G.

(ii) When §§ 63.132 through 63.149 refer to table 9 compounds, the owner or operator is only required to consider compounds that meet the definition of organic HAP in § 63.482 and that are listed in table 9 of 40 CFR part 63,subpart G, for the purposes of this subpart.

(iii) When §§ 63.132 through 63.149 refer to compounds in table 36 of 40 CFR part 63, subpart G, or compounds in List 1 and/or List 2, as listed in table 36 of 40 CFR part 63, subpart G, the owner or operator is only required to consider compounds that meet the definition of organic HAP in § 63.482 and that are listed in table 36 of 40 CFR part 63, subpart G, for the purposes of this subpart.

(11) Whenever §§ 63.132 through 63.147 refer to a Group 1 wastewater stream or a Group 2 wastewater stream, the definitions of these terms contained in § 63.482 shall apply, for the purposes of this subpart.

(12) When § 63.149(d) refers to "§ 63.100(f) of subpart F" the phrase "§ 63.480(c)" shall apply for the purposes of this subpart. In addition, where § 63.149(d) states "and the item of equipment is not otherwise exempt from controls by the provisions of subparts A, F, G, or H of this part", the phrase "and the item of equipment is not otherwise exempt from controls by the provisions of subparts A, F, G, H, or U of this part," shall apply for the purposes of this subpart.

(13) When § 63.149(e)(1) and (e)(2) refer to "a chemical manufacturing process unit subject to the new source requirements of 40 CFR 63.100(l)(1) or 40 CFR 63.100 (l)(2)," the phrase "an EPPU that is part of a new affected source or that is a new affected source," shall apply for the purposes of this subpart.

(14) When the Notification of Compliance Status requirements contained in § 63.152(b) are referred to in §§ 63.138 and 63.146, the Notification of Compliance Status requirements contained in § 63.506(e)(5) shall apply for the purposes of this subpart. In addition, when §§ 63.138 and 63.146 require that information be reported

according to § 63.152(b) in the Notification of Compliance Status, owners or operators of affected sources shall report the specified information in the Notification of Compliance Status required by § 63.506(e)(5), for the purposes of this subpart.

(15) When the Periodic Report requirements contained in § 63.152(c) are referred to in § 63.146, the Periodic Report requirements contained in § 63.506(e)(6) shall apply for the purposes of this subpart. In addition, when § 63.146 requires that information be reported in the Periodic Reports required in § 63.152(c), owners or operators of affected sources shall report the specified information in the Periodic Reports required in § 63.506(e)(6), for the purposes of this subpart.

(16) When the term "range" is used in §§ 63.132 through 63.149, the term "level" shall apply instead, for the purposes of this subpart. This level shall be determined using the procedures specified in § 63.505.

(17) When § 63.143(f) specifies that owners or operators shall establish the range that indicates proper operation of the treatment process or control device, the owner or operator shall instead comply with the requirements of § 63.505(c) or (d) for establishing parameter level maximums/minimums, for the purposes of this subpart.

(18) When § 63.146(b)(7) and § 63.146(b)(8) require that "the information on parameter ranges specified in § 63.152(b)(2)" be reported in the Notification of Compliance Status, owners and operators of affected sources are instead required to report the information on parameter levels in the Notification of Compliance Status as specified in § 63.506(e)(5)(ii), for the purposes of this subpart.

(19) For the purposes of this subpart, the owner or operator of an affected source is not required to include process wastewater streams that contain styrene when conducting performance tests for the purposes of calculating the required mass removal (RMR) or the actual mass removal (AMR) under the provisions described in § 63.145(f) or § 63.145(g). For purposes of this paragraph, a process wastewater stream is considered to contain styrene if the wastewater stream meets the requirements in paragraph (a)(19)(i), (ii), or (iii) of this section:

(i) The wastewater stream originates at equipment that produces styrene butadiene rubber by solution;

(ii) The wastewater stream originates at equipment that produces styrene butadiene rubber by emulsion; or

(iii) The wastewater stream originates at equipment that produces styrene butadiene latex.

(20) When the provisions of § 63.139(c)(1)(ii), § 63.145(d)(4), or § 63.145(i)(2) specify that Method 18, 40 CFR part 60, appendix A shall be used, Method 18 or Method 25A, 40 CFR part 60, appendix A may be used for the purposes of this subpart. The use of Method 25A, 40 CFR part 60, appendix A shall conform with the requirements in paragraphs (a)(20)(i) and (a)(20)(ii) of this section.

(i) The organic HAP used as the calibration gas for Method 25A, 40 CFR part 60, appendix A shall be the single organic HAP representing the largest percent by volume of the emissions.

(ii) The use of Method 25A, 40 CFR part 60, appendix A is acceptable if the response from the high-level calibration gas is at least 20 times the standard deviation of the response from the zero calibration gas when the instrument is zeroed on the most sensitive scale.

(21) In § 63.145(j), instead of the reference to § 63.11(b), and instead of § 63.145(j)(1) and § 63.145(j)(2), the requirements in § 63.504(c) shall apply.

(22) The owner or operator of a facility which receives a Group 1 wastewater stream, or a residual removed from a Group 1 wastewater stream, for treatment pursuant to § 63.132(g) is subject to the requirements of § 63.132(g) with the differences identified in this section, and is not subject to subpart DD of this part, with respect to the received material.

(23) When § 63.132(g) refers to "§§ 63.133 through 63.137" or "§§ 63.133 through 63.147", the provisions in this § 63.501 shall apply, for the purposes of this subpart.

(b) Except for those streams exempted by paragraph (c) of this section, the owner or operator of each affected source shall comply with the requirements for maintenance wastewater in § 63.105, except that when § 63.105(a) refers to "organic HAPs listed in table 9 of subpart G of this part," the owner or operator is only required to consider compounds that meet the definition of organic HAP in § 63.482 and that are listed in table 9 of 40 CFR part 63, subpart G, for the purposes of this subpart.

(c) * * *

(1) Back-end wastewater streams originating from equipment whose only elastomer products are latex products.

24. Section 63.502 is amended by:

a. Revising the section title;

b. Revising paragraph (a);

c. Revising paragraph (b) introductory text;

d. Revising paragraphs (b)(1) through (b)(3);

e. Revising paragraphs (b)(5) through (b)(7);

f. Revising paragraph (c);

g. Revising paragraph (d);

h. Revising paragraph (e);

i. Revising paragraph (f);

j. Revising paragraph (g);

k. Revising paragraph (h);

l. Revising paragraph (i);

m. Revising paragraph (j);

n. Adding paragraph (k);

o. Adding paragraph (l);

p. Adding paragraph (m); and

q. Adding paragraph (n).

The revisions and additions read as follows:

§ 63.502 Equipment leak and heat exchange system provisions.

(a) *Equipment leak provisions.* The owner or operator of each affected source, shall comply with the requirements of subpart H of this part, with the exceptions noted in paragraphs (b) through (m) of this section.

(b) Surge control vessels and bottoms receivers described in paragraphs (b)(1) through (b)(7) of this section are exempt from the requirements contained in § 63.170.

(1) Surge control vessels and bottoms receivers that receive only styrene-butadiene latex;

(2) Surge control vessels and bottoms receivers that receive latex products other than styrene-butadiene latex, located downstream of the stripping operations;

(3) Surge control vessels and bottoms receivers that receive only high conversion latex products;

* * * * *

(5) Surge control vessels and bottoms receivers that receive only styrene;

(6) Surge control vessels and bottoms receivers that receive only acrylamide; and

(7) Surge control vessels and bottoms receivers that receive only epichlorohydrin.

(c) The compliance date for the equipment leak provisions in this section is provided in § 63.481(d). Whenever subpart H of this part refers to the compliance dates specified in any paragraph contained in § 63.100, the compliance dates listed in § 63.481(d) shall instead apply, for the purposes of this subpart. When § 63.182(c)(4) refers to "sources subject to subpart F," the phrase "sources subject to this subpart" shall apply, for the purposes of this subpart. In addition, extensions of compliance dates are addressed by § 63.481(e) instead of by § 63.182(a)(6), for the purposes of this subpart.

(d) For an affected source producing polybutadiene rubber or styrene

butadiene rubber by solution, the conditions in paragraphs (d)(1), (d)(2), and (d)(3) of this section are applicable.

(1) Indications of liquids dripping, as defined in subpart H of this part, from bleed ports in pumps and agitator seals in light liquid service, shall not be considered a leak. For the purposes of this subpart, a "bleed port" is a technologically-required feature of the pump or seal whereby polymer fluid used to provide lubrication and/or cooling of the pump or agitator shaft exits the pump, thereby resulting in a visible dripping of fluid.

(2) For reciprocating pumps in heavy liquid service, owners and operators are not required to comply with the requirements in § 63.169 and associated recordkeeping and reporting requirements.

(3) Reciprocating pumps in light liquid service are exempt from § 63.163 and associated recordkeeping and reporting requirements, if recasting the distance piece or reciprocating pump replacement would be necessary to comply with that section.

(e) Owners and operators of an affected source subject to this subpart are not required to submit the Initial Notification required by § 63.182(a)(1) and § 63.182(b).

(f) As specified in § 63.506(e)(5), the Notification of Compliance Status required by § 63.182(a)(2) and § 63.182(c) shall be submitted within 150 days (rather than 90 days) of the applicable compliance date specified in § 63.481(d) for the equipment leak provisions.

(g) The information specified by § 63.182(a)(3) and § 63.182(d) (i.e., Periodic Reports) shall be submitted as part of the Periodic Reports required by § 63.506(e)(6).

(h) If specific items of equipment, comprising part of a process unit subject to this subpart, are managed by different administrative organizations (e.g., different companies, affiliates, departments, divisions, etc.), those items of equipment may be aggregated with any EPPU within the affected source for all purposes under subpart H of this part, providing there is no delay in achieving the applicable compliance date.

(i) When § 63.166(b)(4)(i) refers to Table 9 of subpart G of this part, the owner or operator is only required to consider organic HAP listed on Table 9 of subpart G of this subpart that are also listed on Table 5 of this subpart.

(j) When the provisions of subpart H of this part specify that Method 18, 40 CFR part 60, appendix A shall be used, either Method 18 or Method 25A, 40 CFR part 60, appendix A may be used for the purposes of this subpart. The use of Method 25A, 40 CFR part 60, appendix A shall conform with the requirements in paragraphs (j)(1) and (j)(2) of this section.

(1) The organic HAP used as the calibration gas for Method 25A, 40 CFR part 60, appendix A shall be the single organic HAP representing the largest percent by volume of emissions.

(2) The use of Method 25A, 40 CFR part 63, appendix A is acceptable if the response from the high-level calibration gas is at least 20 times the standard deviation of the response from the zero calibration gas when the instrument is zeroed on the most sensitive scale.

(k) An owner or operator using a flare to comply with the requirements of this section shall conduct a compliance demonstration as specified in § 63.504(c).

(l) When the term "equipment" is used in subpart H of this part, the definition of this term in § 63.482(b) shall apply for the purposes of this subpart.

(m) The phrase "the provisions of subparts F, I, or U of this part" shall apply instead of the phrase "the provisions of subpart F or I of this part" throughout §§ 63.163 and 63.168, for the purposes of this subpart. In addition, the phrase "subparts F, I, and U" shall apply instead of the phrase "subparts F and I" in § 63.174(c)(2)(iii), for the purposes of this subpart.

(n) *Heat exchange system provisions.* The owner or operator of each affected source shall comply with the requirements of § 63.104 for heat exchange systems, with the exceptions noted in paragraphs (n)(1) through (n)(5) of this section.

(1) When the term "chemical manufacturing process unit" is used in § 63.104, the term "elastomer product process unit" (or EPPU) shall apply for the purposes of this subpart, with the exception noted in paragraph (n)(2) of this section.

(2) When the phrase "a chemical manufacturing process unit meeting the conditions of § 63.100(b)(1) through (b)(3) of this subpart, except for chemical manufacturing process units meeting the condition specified in § 63.100(c) of this subpart" is used in § 63.104(a), the term "an EPPU, except for EPPUs meeting the condition specified in § 63.480(b)" shall apply for the purposes of this subpart.

(3) When § 63.104 refers to Table 4 of subpart F of this part or Table 9 of subpart G of this part, the owner or operator is only required to consider organic HAP listed on Table 5 of this subpart.

(4) When § 63.104(c)(3) specifies the monitoring plan retention requirements, and when § 63.104(f)(1) refers to the record retention requirements in § 63.103(c)(1), the requirements in § 63.506(a) and § 63.506(h) shall apply, for the purposes of this subpart.

(5) When § 63.104(f)(2) requires information to be reported in the Periodic Reports required by § 63.152(c), the owner or operator shall instead report the information specified in § 63.104(f)(2) in the Periodic Reports required by § 63.506(e)(6), for the purposes of this subpart.

(6) The compliance date for heat exchange systems subject to the provisions of this section is specified in § 63.481(d)(6).

25. Section 63.503 is amended by:

a. Revising paragraph (e)(3)(ii);

b. Revising paragraph (g)(2)(iii)(B)(*2*);

c. Revising paragraph (h)(1) introductory text;

d. Revising paragraph (h)(7)(ii) introductory text;

e. Revising paragraph (i)(1) introductory text; and

f. Revising paragraph (m)(3)(iii).

The revisions read as follows:

§ 63.503 Emissions averaging provisions.

* * * * *

(e) * * *

(3) * * *

(ii) The initial demonstration in the Emissions Averaging Plan or operating permit application that credit-generating emission points will be capable of generating sufficient credits to offset the debits from the debit-generating emission points shall be made under representative operating conditions. After the compliance date, actual operating data shall be used for all debit and credit calculations.

* * * * *

(g) * * *

(2) * * *

(iii) * * *

(B) * * *

(*2*) For determining debits from Group 1 continuous front-end process vents, product recovery devices shall not be considered control devices and shall not be assigned a percent reduction in calculating $ECFEPV_{iACTUAL}$. The sampling site for measurement of uncontrolled emissions shall be after the final uncontrolled recovery device. However, as provided in § 63.113(a)(3), a Group 1 continuous front-end process vent may add sufficient product recovery to raise the TRE index value above 1.0, thereby becoming a Group 2 continuous front-end process vent. Such a continuous front-end process vent is not a Group 1 continuous front-end

process vent and should, therefore, not be included in determining debits under this paragraph.

* * * * *

(h) * * *

(1) Source-wide credits shall be calculated using Equation 41. Credits and all terms of the equation are in units of Mg/month, and the baseline date is November 15, 1990:

$$\begin{aligned}\text{Credits} = {} & D\sum_{i=1}^{n}\left((0.02)\,ECFEPV1_{iu} - ECFEPV1_{iACTUAL}\right) + D\sum_{i=1}^{m}\left(ECFEPV2_{iBASE} - ECFEPV2_{iACTUAL}\right) \\ & + D\sum_{i=1}^{n}\left((0.05)\,ES1_{iu} - ES1_{iACTUAL}\right) + D\sum_{i=1}^{m}\left(ES2_{iBASE} - ES2_{iACTUAL}\right) + D\left(EBEP_{c}\right) - \left(EBEP_{ACTUAL}\right) \\ & + D\sum_{i=1}^{n}\left(EWW1_{ic} - EWW1_{iACTUAL}\right) + D\sum_{i=1}^{m}\left(EWW2_{iBASE} - EWW2_{iACTUAL}\right) \\ & + D\sum_{i=1}^{n}\left((0.1)\,EBFEPV1_{iu} - EBFEPV1_{iACTUAL}\right) + D\sum_{i=1}^{n}\left((0.1)\,EABV1_{iu} - EABV1_{iACTUAL}\right) \\ & + D\sum_{i=1}^{m}\left(EBFEPV2_{iBASE} - EBFEPV2_{iACTUAL}\right) + D\sum_{i=1}^{m}\left(EABV2_{iBASE} - EABV2_{iACTUAL}\right) \qquad \text{[Eq. 41]}\end{aligned}$$

Where:

D = Discount factor = 0.9 for all credit generating emission points, except those controlled by a pollution prevention measure; discount factor = 1.0 for each credit generating emission point controlled by a pollution prevention measure (*i.e.*, no discount provided).

$ECFEPV1_{iACTUAL}$ = Emissions for each Group 1 continuous front-end process vent i that is controlled to a level more stringent than the reference control technology. $ECFEPV1_{iACTUAL}$ is calculated according to paragraph (h)(2)(ii) of this section.

$(0.02)ECFEPV1_{iu}$ = Emissions from each Group 1 continuous front-end process vent i if the reference control technology had been applied to the uncontrolled emissions. $ECFEPV1_{iu}$ is calculated according to paragraph (h)(2)(i) of this section.

$ECFEPV2_{iACTUAL}$ = Emissions from each Group 2 continuous front-end process vent i that is controlled. $ECFEPV2_{iACTUAL}$ is calculated according to paragraph (h)(2)(iii) of this section.

$ECFEPV2_{iBASE}$ = Emissions from each Group 2 continuous front-end process vent i at the baseline date. $ECFEPV2_{iBASE}$ is calculated in paragraph (h)(2)(iv) of this section.

$ES1_{iACTUAL}$ = Emissions from each Group 1 storage vessel i that is controlled to a level more stringent than the reference control technology or standard. $ES1_{iACTUAL}$ is calculated according to paragraph (h)(3) of this section.

$(0.05)\,ES1_{iu}$ = Emissions from each Group 1 storage vessel i if the reference control technology had been applied to the uncontrolled emissions. $ES1_{iu}$ is calculated according to paragraph (h)(3) of this section.

$ES2_{iACTUAL}$ = Emissions from each Group 2 storage vessel i that is controlled. $ES2_{iACTUAL}$ is calculated according to paragraph (h)(3) of this section.

$ES2_{iBASE}$ = Emissions from each Group 2 storage vessel i at the baseline date. $ES2_{iBASE}$ is calculated in paragraph (h)(3) of this section.

$EBEP_{ACTUAL}$ = Actual emissions from back-end process operations, Mg/month. $EBEP_{ACTUAL}$ is calculated in paragraph (h)(4)(i) of this section.

$EBEP_{c}$ = Emissions from back-end process operations if the residual organic HAP limits in § 63.494(a) were met, Mg/month. $EBEP_{c}$ is calculated in paragraph (h)(4)(ii) of this section.

$EWW1_{iACTUAL}$ = Emissions from each Group 1 wastewater stream i that is controlled to a level more stringent than the reference control technology. $EWW1_{iACTUAL}$ is calculated according to paragraph (h)(5) of this section.

$EWW1_{ic}$ = Emissions from each Group 1 wastewater stream i if the reference control technology had been applied to the uncontrolled emissions. $EWW1_{ic}$ is calculated according to paragraph (h)(5) of this section.

$EWW2_{iACTUAL}$ = Emissions from each Group 2 wastewater stream i that is controlled. $EWW2_{iACTUAL}$ is calculated according to paragraph (h)(5) of this section.

$EWW2_{iBASE}$ = Emissions from each Group 2 wastewater stream i at the baseline date. $EWW2_{iBASE}$ is calculated according to paragraph (h)(5) of this section.

$(0.1)\,EBFEPV1_{iu}$ = Emissions from each Group 1 batch front-end process vent i if the applicable standard had been applied to the uncontrolled emissions. $EBFEPV1_{iu}$ is calculated according to paragraph (h)(6)(i) of this section.

$EBFEPV1_{iACTUAL}$ = Emissions from each Group 1 batch front-end process vent i that is controlled to a level more stringent than the applicable standard. $EBFEPV1_{iACTUAL}$ is calculated according to paragraph (h)(6)(ii) of this section.

$(0.1)EABV1_{iu}$ = Emissions from each Group 1 aggregate batch vent stream i if the applicable standard had been applied to the uncontrolled emissions. $EABV1_{iu}$ is calculated according to paragraph (h)(7)(i) of this section.

$EABV1_{iACTUAL}$ = Emissions from each Group 1 aggregate batch vent stream i that is controlled to a level more stringent than the applicable standard. $EABV1_{iACTUAL}$ is calculated according to paragraph (h)(7)(ii) of this section.

$EBFEPV2_{iBASE}$ = Emissions from each Group 2 batch front-end process vent i at the baseline date. $EBFEPV2_{iBASE}$ is calculated according to paragraph (h)(6)(iv) of this section.

$EBFEPV2_{iACTUAL}$ = Emissions from each Group 2 batch front-end process vent i that is controlled. $EBFEPV2_{iACTUAL}$ is calculated according to paragraph (h)(6)(iii) of this section.

$EABV2_{iBASE}$ = Emissions from each Group 2 aggregate batch vent stream

i at the baseline date. $EABV2_{iBASE}$ is calculated according to paragraph (h)(7)(iv) of this section.

$EABV2_{iACTUAL}$ = Emissions from each Group 2 aggregate batch vent stream i that is controlled. $EABV2_{iACTUAL}$ is calculated according to paragraph (h)(7)(iii) of this section.

n = Number of Group 1 emission points included in the emissions average. The value of n is not necessarily the same for continuous front-end process vents, batch front-end process vents, aggregate batch vent streams, storage vessels, wastewater streams, or the collection of process sections within the affected source.

m = Number of Group 2 emission points included in the emissions average. The value of m is not necessarily the same for continuous front-end process vents, batch front-end process vents, aggregate batch vent streams, storage vessels, wastewater streams, or the collection of process sections within the affected source.

* * * * *

(7) * * *

(ii) Actual emissions from Group 1 aggregate batch vent streams controlled to a level more stringent than the standard ($EABV1_{iACTUAL}$) shall be calculated using Equation 49.

$$EABV1_{iACTUAL} = EABV1_{iu}\left(1 - \frac{\text{Percent reduction}}{100\%}\right) \quad \text{[Eq. 49]}$$

* * * * *

(i) * * *

(1) In those cases where the owner or operator is seeking permission to take credit for use of a control technology that is different in use or design from the reference control technology, and the different control technology will be used in more than three applications at a single plant-site, the owner or operator shall submit the information specified in paragraphs (i)(1)(i) through (i)(1)(iv) of this section, as specified in § 63.506(e)(7)(ii), to the Director of the EPA Office of Air Quality Planning and Standards, in writing.

* * * * *

(m) * * *

(3) * * *

(iii) For closed vent systems with control devices, conduct an initial design evaluation and submit an operating plan according to the procedures specified in § 63.120(d) and § 63.122(b), and as required by § 63.484.

* * * * *

26. Section 63.504 is revised (including the section title) to read as follows:

§ 63.504 Additional requirements for performance testing.

(a) Performance testing shall be conducted in accordance with § 63.7(a)(1), (a)(3), (d), (e)(1), (e)(2), (e)(4), (g), and (h), with the exceptions specified in paragraphs (a)(1) through (a)(5) of this section and the additions specified in paragraph (b) of this section. Sections 63.484 through 63.501 also contain specific testing requirements.

(1) Performance tests shall be conducted according to the provisions of § 63.7(e)(1) and (e)(2), except that performance tests shall be conducted at maximum representative operating conditions achievable during one of the time periods described in paragraph (a)(1)(i) of this section, without causing any of the situations described in paragraph (a)(1)(ii) of this section to occur.

(i) The 6-month period that ends 2 months before the Notification of Compliance Status is due, according to § 63.506(e)(5); or the 6-month period that begins 3 months before the performance test and ends 3 months after the performance test.

(ii) Causing damage to equipment; necessitating that the owner or operator make product that does not meet an existing specification for sale to a customer; or necessitating that the owner or operator make product in excess of demand.

(2) References in § 63.7(g) to the Notification of Compliance Status requirements in § 63.9(h) shall refer to the requirements in § 63.506(e)(5).

(3) Because the site-specific test plans in § 63.7(c)(3) are not required, § 63.7(h)(4)(ii) is not applicable.

(4) The owner or operator shall notify the Administrator of the intent to conduct a performance test at least 30 days before the performance test is scheduled, to allow the Administrator the opportunity to have an observer present during the test. If after 30 days notice for an initially scheduled performance test, there is a delay (due to operational problems, etc.) in conducting the scheduled performance test, the owner or operator of an affected facility shall notify the Administrator as soon as possible of any delay in the original test date, either by providing at least 7 days prior notice of the rescheduled date of the performance test, or by arranging a rescheduled date with the Administrator by mutual agreement.

(5) Performance tests shall be performed no later than 150 days after the compliance dates specified in this subpart (*i.e.*, in time for the results to be included in the Notification of Compliance Status), rather than according to the time periods in § 63.7(a)(2).

(b) Data shall be reduced in accordance with the EPA approved methods specified in the applicable subpart or, if other test methods are used, the data and methods shall be validated according to the protocol in Method 301, 40 CFR part 63, appendix A.

(c) Notwithstanding any other provision of this subpart, if an owner or operator of an affected source uses a flare to comply with any of the requirements of this subpart, the owner or operator shall comply with paragraphs (c)(1) through (c)(3) of this section. The owner or operator is not required to conduct a performance test to determine percent emission reduction or outlet organic HAP or TOC concentration. If a compliance demonstration has been conducted previously for a flare, using the techniques specified in paragraphs (c)(1) through (c)(3) of this section, that compliance demonstration may be used to satisfy the requirements of this paragraph if either no deliberate process changes have been made since the compliance demonstration, or the results of the compliance demonstration reliably demonstrate compliance despite process changes.

(1) Conduct a visible emission test using the techniques specified in § 63.11(b)(4);

(2) Determine the net heating value of the gas being combusted, using the techniques specified in § 63.11(b)(6); and

(3) Determine the exit velocity using the techniques specified in either § 63.11(b)(7)(i) (and § 63.11(b)(7)(iii), where applicable) or § 63.11(b)(8), as appropriate.

27. Section 63.505 is amended by:

a. Revising paragraph (a);

b. Revising paragraph (b) introductory text;

c. Revising paragraph (b)(2);

d. Revising paragraph (b)(3) introductory text;

e. Revising paragraphs (b)(3)(i)(A) through (b)(3)(i)(D);
f. Revising paragraph (b)(3)(ii);
g. Revising paragraph (c);
h. Revising paragraph (d);
i. Revising paragraph (e) introductory text;
j. Revising paragraph (e)(3);
k. Revising paragraph (g)(1) introductory text;
l. Revising paragraphs (g)(1)(ii) and (g)(1)(iii);
m. Revising paragraph (g)(2) introductory text;
n. Revising paragraph (g)(2)(ii);
o. Revising paragraph (h)(1) introductory text;
p. Revising paragraph (h)(2) introductory text;
q. Removing and reserving paragraph (b)(1);
r. Removing and reserving paragraph (f);
s. Removing paragraph (b)(3)(i)(E);
t. Adding paragraph (g)(1)(v); and
u. Adding paragraph (g)(3).

The revisions and additions read as follows:

§ 63.505 Parameter monitoring levels and excursions.

(a) *Establishment of parameter monitoring levels.* The owner or operator of a control or recovery device that has one or more parameter monitoring level requirements specified under this subpart shall establish a maximum or minimum level for each measured parameter. If a performance test is required by this subpart for a control device, the owner or operator shall use the procedures in either paragraph (b) or (c) of this section to establish the parameter monitoring level(s). If a performance test is not required by this subpart for a control device, the owner or operator may use the procedures in paragraph (b), (c), or (d) of this section to establish the parameter monitoring levels. When using the procedures specified in paragraph (c) or (d) of this section, the owner or operator shall submit the information specified in § 63.506(e)(3)(vii) for review and approval, as part of the Precompliance Report.

(1) The owner or operator shall operate control and recovery devices such that the daily average of monitored parameters remains above the minimum established level or below the maximum established level, except as otherwise stated in this subpart.

(2) As specified in § 63.506(e)(5), all established levels, along with their supporting documentation and the definition of an operating day, shall be submitted as part of the Notification of Compliance Status.

(3) Nothing in this section shall be construed to allow a monitoring parameter excursion caused by an activity that violates other applicable provisions of subpart A, F, G, or H of this part.

(b) *Establishment of parameter monitoring levels based exclusively on performance tests.* In cases where a performance test is required by this subpart, or the owner or operator of the affected source elects to do a performance test in accordance with the provisions of this subpart, and an owner or operator elects to establish a parameter monitoring level for a control, recovery, or recapture device based exclusively on parameter values measured during the performance test, the owner or operator of the affected source shall comply with the procedures in paragraphs (b)(1) through (b)(4) of this section, as applicable.

(1) [Reserved]

(2) *Back-end process operations using a control or recovery device to comply with §§ 63.493 through 63.500 and continuous front-end process vents.* During initial compliance testing, the appropriate parameter shall be continuously monitored during the required 1-hour runs. The monitoring level(s) shall then be established as the average of the maximum (or minimum) point values from the three test runs. The average of the maximum values shall be used when establishing a maximum level, and the average of the minimum values shall be used when establishing a minimum level.

(3) *Batch front-end process vents.* The monitoring level(s) shall be established using the procedures specified in either paragraph (b)(3)(i) or (b)(3)(ii) of this section. The procedures specified in this paragraph (b)(3) may only be used if the batch emission episodes, or portions thereof, selected to be controlled were tested, and monitoring data were collected, during the entire period in which emissions were vented to the control device, as specified in § 63.490(c)(1)(i). If the owner or operator chose to test only a portion of the batch emission episode, or portion thereof, selected to be controlled, the procedures in paragraph (c) of this section shall be used.

(i) * * *

(A) The average monitored parameter value shall be calculated for each batch emission episode, or portion thereof, in the batch cycle selected to be controlled. The average shall be based on all values measured during the required performance test.

(B) If the level to be established is a maximum operating parameter, the level shall be defined as the minimum of the average parameter values of the batch emission episodes, or portions thereof, in the batch cycle selected to be controlled (*i.e.*, identify the emission episode, or portion thereof, which requires the lowest parameter value in order to assure compliance. The average parameter value that is necessary to assure compliance for that emission episode, or portion thereof, shall be the level for all emission episodes, or portions thereof, in the batch cycle, that are selected to be controlled).

(C) If the level to be established is a minimum operating parameter, the level shall be defined as the maximum of the average parameter values of the batch emission episodes, or portions thereof, in the batch cycle selected to be controlled (*i.e.*, identify the emission episode, or portion thereof, which requires the highest parameter value in order to assure compliance. The average parameter value that is necessary to assure compliance for that emission episode, or portion thereof, shall be the level for all emission episodes, or portions thereof, in the batch cycle, that are selected to be controlled).

(D) Alternatively, an average monitored parameter value shall be calculated for the entire batch cycle based on all values measured during each batch emission episode, or portion thereof, selected to be controlled.

(ii) Instead of establishing a single level for the batch cycle, as described in paragraph (b)(3)(i) of this section, an owner or operator may establish separate levels for each batch emission episode, or portion thereof, selected to be controlled. Each level shall be determined as specified in paragraph (b)(3)(i)(A) of this section.

* * * * *

(c) *Establishment of parameter monitoring levels based on performance tests, supplemented by engineering assessments and/or manufacturer's recommendations.* In cases where a performance test is required by this subpart, or the owner or operator elects to do a performance test in accordance with the provisions of this subpart, and the owner or operator elects to establish a parameter monitoring level for a control, recovery, or recapture device under this paragraph (c), the owner or operator shall supplement the parameter values measured during the performance test with engineering assessments and/or manufacturer's recommendations. Performance testing is not required to be conducted over the entire range of expected parameter values.

(d) *Establishment of parameter monitoring based on engineering*

assessments and/or manufacturer's recommendations. In cases where a performance test is not required by this subpart and an owner or operator elects to establish a parameter monitoring level for a control, recovery, or recapture device under this paragraph (d), the determination of the parameter monitoring level shall be based exclusively on engineering assessments and/or manufacturer's recommendations.

(e) *Demonstration of compliance with back-end process provisions using stripper parameter monitoring.* If the owner or operator is demonstrating compliance with § 63.495 using stripper parameter monitoring, stripper parameter levels shall be established for each grade in accordance with paragraphs (e)(1) and (e)(2) of this section. A single set of stripper parameter levels may be representative of multiple grades.

* * * * *

(3) After the initial determinations, an owner or operator may add a grade, with corresponding stripper parameter levels, using the procedures in paragraphs (e)(1) and (e)(2) of this section. The results of this determination shall be submitted in the next periodic report.

* * * * *

(f) [Reserved]

(g) * * *

(1) With respect to storage vessels (where the applicable monitoring plan specifies continuous monitoring), continuous front-end process vents, aggregate batch vent streams, back-end process operations complying through the use of control or recovery devices, and process wastewater streams, an excursion means any of the three cases listed in paragraphs (g)(1)(i) through (g)(1)(iii) of this section. For a control or recovery device where multiple parameters are monitored, if one or more of the parameters meets the excursion criteria in paragraphs (g)(1)(i) through (g)(1)(iii) of this section, this is considered a single excursion for the control or recovery device. For each excursion, the owner or operator shall be deemed out of compliance with the provisions of this subpart, except as provided in paragraph (i) of this section.

* * * * *

(ii) When the period of control or recovery device operation, with the exception noted in paragraph (g)(1)(v) of this section, is 4 hours or greater in an operating day and monitoring data are insufficient, as defined in paragraph (g)(1)(iv) of this section, to constitute a valid hour of data for at least 75 percent of the operating hours.

(iii) When the period of control or recovery device operation, with the exception noted in paragraph (g)(1)(v) of this section, is less than 4 hours in an operating day and more than two of the hours during the period of operation do not constitute a valid hour of data due to insufficient monitoring data, as defined in paragraph (g)(1)(iv) of this section.

* * * * *

(v) The periods listed in paragraphs (g)(1)(v)(A) through (g)(1)(v)(E) of this section are not considered to be part of the period of control or recovery device operation, for the purposes of paragraphs (g)(1)(ii) and (g)(1)(iii) of this section.

(A) Monitoring system breakdowns, repairs, calibration checks, and zero (low-level) and high-level adjustments;

(B) Start-ups;

(C) Shutdowns;

(D) Malfunctions; or

(E) Periods of non-operation of the affected source (or portion thereof), resulting in cessation of the emissions to which the monitoring applies.

(2) With respect to batch front-end process vents, an excursion means one of the two cases listed in paragraphs (g)(2)(i) and (g)(2)(ii) of this section. For a control device where multiple parameters are monitored, if one or more of the parameters meets the excursion criteria in either paragraph (g)(2)(i) or (g)(2)(ii) of this section, this is considered a single excursion for the control device. For each excursion, the owner or operator shall be deemed out of compliance with the provisions of this subpart, except as provided in paragraph (i) of this section.

* * * * *

(ii) When monitoring data are insufficient for an operating day. Monitoring data shall be considered insufficient when measured values are not available for at least 75 percent of the 15-minute periods when batch emission episodes selected to be controlled are being vented to the control device during the operating day, using the procedures specified in paragraphs (g)(2)(ii)(A) through (g)(2)(ii)(D) of this section.

(A) Determine the total amount of time during the operating day when batch emission episodes selected to be controlled are being vented to the control device.

(B) Subtract the time during the periods listed in paragraphs (g)(2)(ii)(B)(*1*) through (g)(2)(ii)(B)(*4*) of this section from the total amount of time determined in paragraph (g)(2)(ii)(A) of this section, to obtain the operating time used to determine if monitoring data are insufficient.

(*1*) Monitoring system breakdowns, repairs, calibration checks, and zero (low-level) and high-level adjustments;

(*2*) Start-ups;

(*3*) Shutdowns; or

(*4*) Malfunctions.

(C) Determine the total number of 15-minute periods in the operating time used to determine if monitoring data are insufficient, as was determined in accordance with paragraph (g)(2)(ii)(B) of this section.

(D) If measured values are not available for at least 75 percent of the total number of 15-minute periods determined in paragraph (g)(2)(ii)(C) of this section, the monitoring data are insufficient for the operating day.

(3) For storage vessels where the applicable monitoring plan does not specify continuous monitoring, an excursion is defined in paragraph (g)(3)(i) or (ii) of this section, as applicable. For a control or recovery device where multiple parameters are monitored, if one or more of the parameters meets the excursion criteria, this is considered a single excursion for the control or recovery device. For each excursion, the owner or operator shall be deemed out of compliance with the provisions of this subpart, except as provided in paragraph (i) of this section.

(i) If the monitoring plan specifies monitoring a parameter and recording its value at specific intervals (such as every 15 minutes or every hour), either of the cases listed in paragraph (g)(3)(i)(A) or (g)(3)(i)(B) of this section is considered a single excursion for the control device.

(A) When the average value of one or more parameters, averaged over the duration of the filling period for the storage vessel, is above the maximum level or below the minimum level established for the given parameters.

(B) When monitoring data are insufficient. Monitoring data shall be considered insufficient when measured values are not available for at least 75 percent of the specific intervals at which parameters are to be monitored and recorded, according to the storage vessel's monitoring plan, during the filling period for the storage vessel.

(ii) If the monitoring plan does not specify monitoring a parameter and recording its value at specific intervals (for example, if the relevant operating requirement is to exchange a disposable carbon canister before expiration of its rated service life), the monitoring plan shall define an excursion in terms of the relevant operating requirement.

(h) * * *

(1) With respect to back-end process operations complying through the use of stripping technology, and demonstrating

compliance by sampling, an excursion means one of the two cases listed in paragraphs (h)(1)(i) and (h)(1)(ii) of this section. For each excursion, the owner or operator shall be deemed out of compliance with the provisions of this subpart, except as provided in paragraph (i) of this section.

* * * * *

(2) With respect to back-end process operations complying through the use of stripping technology, and demonstrating compliance by stripper parameter monitoring, an excursion means one of the three cases listed in paragraphs (h)(2)(i), (h)(2)(ii), and (h)(2)(iii) of this section. For each excursion, the owner or operator shall be deemed out of compliance with the provisions of this subpart, except as provided in paragraph (i) of this section.

* * * * *

28. Section 63.506 is amended by:

a. Revising paragraph (a);

b. Revising paragraphs (b)(1) and (b)(2);

c. Revising paragraph (d) introductory text;

d. Revising paragraphs (d)(2) and (d)(3);

e. Revising paragraphs (d)(6) through (d)(9);

f. Revising paragraph (e) introductory text;

g. Revising paragraphs (e)(1) through (e)(3);

h. Revising paragraph (e)(4) introductory text;

i. Revising paragraph (e)(4)(i);

j. Revising paragraph (e)(4)(ii) introductory text;

k. Revising paragraph (e)(4)(ii)(B);

l. Revising paragraph (e)(4)(ii)(D);

m. Revising paragraphs (e)(4)(ii)(F)(*1*) and (e)(4)(ii)(F)(*2*);

n. Revising paragraphs (e)(4)(ii)(F)(*4*) and (e)(4)(ii)(F)(*5*);

o. Revising paragraph (e)(4)(ii)(G)(*1*);

p. Revising paragraph (e)(4)(ii)(H)(*2*);

q. Revising paragraph (e)(4)(ii)(H)(*3*)(*i*);

r. Revising paragraph (e)(4)(ii)(H)(*4*)(*i*);

s. Revising paragraphs (e)(4)(ii)(I) through (e)(4)(ii)(K);

t. Revising paragraph (e)(4)(ii)(L)(*2*);

u. Revising paragraph (e)(4)(iii);

v. Revising paragraph (e)(4)(iv) introductory text;

w. Revising paragraph (e)(4)(iv)(A) introductory text;

x. Revising paragraph (e)(4)(iv)(B) introductory text;

y. Revising paragraph (e)(4)(iv)(C);

z. Revising paragraph (e)(5) introductory text;

aa. Revising paragraph (e)(5)(i) introductory text;

bb. Revising paragraph (e)(5)(i)(A);

cc. Revising paragraph (e)(5)(ii) introductory text;

dd. Revising paragraph (e)(5)(iii);

ee. Revising paragraph (e)(5)(v);

ff. Revising paragraphs (e)(5)(vii) through (e)(5)(ix);

gg. Revising paragraph (e)(6) introductory text;

hh. Revising paragraphs (e)(6)(i) and (e)(6)(ii);

ii. Revising paragraph (e)(6)(iii)(A);

jj. Revising paragraph (e)(6)(iii)(B);

kk. Revising paragraph (e)(6)(iii)(D) introductory text;

ll. Revising paragraphs (e)(6)(iii)(D)(*2*) through (e)(6)(iii)(D)(*4*);

mm. Revising paragraph (e)(6)(iv);

nn. Revising paragraph (e)(6)(v)(B);

oo. Revising paragraph (e)(6)(vi) through (e)(6)(xi);

pp. Revising paragraph (e)(7) introductory text;

qq. Revising paragraphs (e)(7)(i) through (e)(7)(iii);

rr. Revising paragraph (e)(8);

ss. Revising paragraph (f) introductory text;

tt. Revising paragraph (f)(3) introductory text;

uu. Revising paragraph (g) introductory text;

vv. Revising paragraph (g)(1);

ww. Revising paragraph (g)(2)(ii)(D);

xx. Revising paragraph (g)(3) introductory text;

yy. Revising paragraph (g)(3)(i)(A);

zz. Revising paragraph (g)(4);

aaa. Revising paragraph (h) introductory text;

bbb. Revising paragraph (h)(1) introductory text;

ccc. Revising paragraph (h)(1)(ii)(B);

ddd. Revising paragraph (h)(1)(iv);

eee. Revising paragraph (h)(1)(vi) introductory text;

fff. Revising paragraphs (h)(1)(vi)(B) and (h)(1)(vi)(C);

ggg. Revising paragraph (h)(2)(i);

hhh. Revising paragraph (h)(2)(iii);

iii. Revising paragraph (h)(2)(iv)(A);

jjj. Removing paragraph (b)(1)(i)(D);

kkk. Removing paragraph (d)(10);

lll. Removing and reserving paragraph (c);

mmm. Removing and reserving paragraphs (d)(4) and (d)(5);

nnn. Removing and reserving paragraph (e)(5)(iv);

ooo. Removing and reserving paragraph (e)(6)(iii) (C);

ppp. Adding paragraph (e)(4)(ii)(N);

qqq. Adding paragraphs (e)(5)(x) through (e)(5)(xii);

rrr. Adding paragraph (e)(6)(iii)(D)(*5*);

sss. Adding paragraph (e)(6)(xii);

ttt. Adding paragraph (e)(7)(iv);

uuu. Adding paragraph (e)(7)(v); and

vvv. Adding paragraph (h)(1)(vi)(D).

The revisions and additions read as follows:

§ 63.506 General recordkeeping and reporting provisions.

(a) *Data retention.* Unless otherwise specified in this subpart, the owner or operator of an affected source shall keep copies of all applicable records and reports required by this subpart for at least 5 years, as specified in paragraph (a)(1) of this section, with the exception listed in paragraph (a)(2) of this section.

(1) All applicable records shall be maintained in such a manner that they can be readily accessed. The most recent 6 months of records shall be retained on site or shall be accessible from a central location by computer or other means that provide access within 2 hours after a request. The remaining 4 and one-half years of records may be retained offsite. Records may be maintained in hard copy or computer-readable form including, but not limited to, on microfilm, computer, floppy disk, magnetic tape, or microfiche.

(2) If an owner or operator submits copies of reports to the appropriate EPA Regional Office, the owner or operator is not required to maintain copies of reports. If the EPA Regional Office has waived the requirement of § 63.10(a)(4)(ii) for submittal of copies of reports, the owner or operator is not required to maintain copies of those reports.

(b) * * *

(1) *Start-up, shutdown, and malfunction plan.* The owner or operator of an affected source shall develop and implement a written start-up, shutdown, and malfunction plan as specified in § 63.6(e)(3). This plan shall describe, in detail, procedures for operating and maintaining the affected source during periods of start-up, shutdown, and malfunction and a program for corrective action for malfunctioning process and air pollution control equipment used to comply with this subpart. Inclusion of Group 2 emission points is not required, unless these points are included in an emissions average. For equipment leaks (subject to § 63.502), the start-up, shutdown, and malfunction plan requirement is limited to control devices and is optional for other equipment. For equipment leaks, the start-up, shutdown, and malfunction plan may include written procedures that identify conditions that justify a delay of repair. A provision for ceasing to collect, during a start-up, shutdown, or malfunction, monitoring data that would otherwise be required by the provisions of this subpart may be included in the start-up, shutdown, and

malfunction plan only if the owner or operator has demonstrated to the Administrator, through the Precompliance Report or a supplement to the Precompliance Report, that the monitoring system would be damaged or destroyed if it were not shut down during the start-up, shutdown, or malfunction. The affected source shall keep the start-up, shutdown, and malfunction plan on-site. Records associated with the plan shall be kept as specified in paragraphs (b)(1)(i)(A) through (b)(1)(i)(C) of this section. Reports related to the plan shall be submitted as specified in paragraph (b)(1)(ii) of this section.

(i) *Records of start-up, shutdown, and malfunction.* The owner or operator shall keep the records specified in paragraphs (b)(1)(i)(A) through (b)(1)(i)(C) of this section.

(A) Records of the occurrence and duration of each start-up, shutdown, and malfunction of operation of process equipment or control devices or recovery devices or continuous monitoring systems used to comply with this subpart during which excess emissions (as defined in § 63.480(j)(4)) occur.

(B) For each start-up, shutdown, or malfunction during which excess emissions (as defined in § 63.480(j)(4)) occur, records reflecting whether the procedures specified in the affected source's start-up, shutdown, and malfunction plan were followed, and documentation of actions taken that are not consistent with the plan. For example, if a start-up, shutdown, and malfunction plan includes procedures for routing a control device to a backup control device, records shall be kept of whether the plan was followed. These records may take the form of a "checklist," or other form of recordkeeping that confirms conformance with the start-up, shutdown, and malfunction plan for the event.

(C) Records specified in paragraphs (b)(1)(i)(A) through (b)(1)(i)(B) of this section are not required if they pertain solely to Group 2 emission points that are not included in an emissions average.

(ii) *Reports of start-up, shutdown, and malfunction.* For the purposes of this subpart, the semiannual start-up, shutdown, and malfunction reports shall be submitted on the same schedule as the Periodic Reports required under paragraph (e)(6) of this section instead of the schedule specified in § 63.10(d)(5)(i). The reports shall include the information specified in § 63.10(d)(5)(i).

(2) *Application for approval of construction or reconstruction.* For new affected sources, each owner or operator shall comply with the provisions in § 63.5 regarding construction and reconstruction, excluding the provisions specified in § 63.5(d)(1)(ii)(H), (d)(1)(iii), (d)(2), and (d)(3)(ii).

(c) [Reserved]

(d) *Recordkeeping and documentation.* Owners or operators required to keep continuous records shall keep records as specified in paragraphs (d)(1) through (d)(7) of this section, unless an alternative recordkeeping system has been requested and approved as specified in paragraph (g) of this section, and except as provided in paragraph (h) of this section. If a monitoring plan for storage vessels pursuant to § 63.484(k) requires continuous records, the monitoring plan shall specify which provisions, if any, of paragraphs (d)(1) through (d)(7) of this section apply. As described in § 63.484(k), certain storage vessels are not required to keep continuous records as specified in this paragraph. Owners and operators of such storage vessels shall keep records as specified in the monitoring plan required by § 63.484(k). Paragraphs (d)(8) and (d)(9) of this section specify documentation requirements.

* * * * *

(2) The owner or operator shall record either each measured data value or block average values for 1 hour or shorter periods calculated from all measured data values during each period. If values are measured more frequently than once per minute, a single value for each minute may be used to calculate the hourly (or shorter period) block average instead of all measured values. Owners or operators of batch front-end process vents shall record each measured data value.

(3) Daily average (or batch cycle daily average) values of each continuously monitored parameter shall be calculated for each operating day as specified in paragraphs (d)(3)(i) through (d)(3)(ii) of this section, except as specified in paragraphs (d)(6) and (d)(7) of this section.

(i) The daily average value or batch cycle daily average shall be calculated as the average of all parameter values recorded during the operating day, except as specified in paragraph (d)(7) of this section. For batch front-end process vents, as specified in § 63.491(e)(2)(i), only parameter values measured during those batch emission episodes, or portions thereof, in the batch cycle that the owner or operator has chosen to control shall be used to calculate the average. The calculated average shall cover a 24-hour period if operation is continuous, or the number of hours of operation per operating day if operation is not continuous.

(ii) The operating day shall be the period that the owner or operator specifies in the operating permit or the Notification of Compliance Status for purposes of determining daily average values or batch cycle daily average values of monitored parameters.

(4) [Reserved]

(5) [Reserved]

(6) *Records required when all recorded values are within the established limits.* If all recorded values for a monitored parameter during an operating day are above the minimum level or below the maximum level established in the Notification of Compliance Status or operating permit, the owner or operator may record that all values were above the minimum level or below the maximum level rather than calculating and recording a daily average (or batch cycle daily average) for that operating day.

(7) Monitoring data recorded during periods identified in paragraphs (d)(7)(i) through (d)(7)(v) of this section shall not be included in any average computed under this subpart. Records shall be kept of the times and durations of all such periods and any other periods during process or control device or recovery device operation when monitors are not operating.

(i) Monitoring system breakdowns, repairs, calibration checks, and zero (low-level) and high-level adjustments;

(ii) Start-ups;

(iii) Shutdowns;

(iv) Malfunctions; or

(v) Periods of non-operation of the affected source (or portion thereof), resulting in cessation of the emissions to which the monitoring applies.

(8) For continuous monitoring systems used to comply with this subpart, records documenting the completion of calibration checks, and records documenting the maintenance of continuous monitoring systems that are specified in the manufacturer's instructions or that are specified in other written procedures that provide adequate assurance that the equipment would reasonably be expected to monitor accurately.

(9) The owner or operator of an affected source granted a waiver under § 63.10(f) shall maintain the information, if any, specified by the Administrator as a condition of the waiver of recordkeeping or reporting requirements.

(e) *Reporting and notification.* In addition to the reports and notifications

required by subpart A, as specified in Table 1 of this subpart, the owner or operator of an affected source shall prepare and submit the reports listed in paragraphs (e)(3) through (e)(8) of this section, as applicable. All reports required by this subpart, and the schedule for their submittal, are listed in Table 9 of this subpart.

(1) Owners and operators shall not be in violation of the reporting requirements of this subpart for failing to submit information required to be included in a specified report if the owner or operator meets the requirements in paragraphs (e)(1)(i) through (e)(1)(iii) of this section. Examples of circumstances where this paragraph may apply include information related to newly-added equipment or emission points, changes in the process, changes in equipment required or utilized for compliance with the requirements of this subpart, or changes in methods or equipment for monitoring, recordkeeping, or reporting.

(i) The information was not known in time for inclusion in the report specified by this subpart;

(ii) The owner or operator has been diligent in obtaining the information; and

(iii) The owner or operator submits a report according to the provisions of paragraphs (e)(1)(iii)(A) through (e)(1)(iii)(C) of this section.

(A) If this subpart expressly provides for supplements to the report in which the information is required, the owner or operator shall submit the information as a supplement to that report. The information shall be submitted no later than 60 days after it is obtained, unless otherwise specified in this subpart.

(B) If this subpart does not expressly provide for supplements, but the owner or operator must submit a request for revision of an operating permit pursuant to part 70 or part 71, due to circumstances to which the information pertains, the owner or operator shall submit the information with the request for revision to the operating permit.

(C) In any case not addressed by paragraph (e)(1)(iii)(A) or (e)(1)(iii)(B) of this section, the owner or operator shall submit the information with the first Periodic Report, as required by this subpart, which has a submission deadline at least 60 days after the information is obtained.

(2) All reports required under this subpart shall be sent to the Administrator at the appropriate address listed in § 63.13. If acceptable to both the Administrator and the owner or operator of a source, reports may be submitted on electronic media.

(3) *Precompliance Report*. Owners or operators of affected sources requesting an extension for compliance; requesting approval to use alternative monitoring parameters, alternative continuous monitoring and recordkeeping, or alternative controls; requesting approval to use engineering assessment to estimate emissions from a batch emissions episode, as described in § 63.488(b)(6)(i); wishing to establish parameter monitoring levels according to the procedures contained in § 63.505(c) or (d); or requesting approval to incorporate a provision for ceasing to collect monitoring data, during a start-up, shutdown, or malfunction, into the start-up, shutdown, and malfunction plan, when that monitoring equipment would be damaged if it did not cease to collect monitoring data, as permitted under § 63.480(j)(3), shall submit a Precompliance Report according to the schedule described in paragraph (e)(3)(i) of this section. The Precompliance Report shall contain the information specified in paragraphs (e)(3)(ii) through (e)(3)(viii) of this section, as appropriate.

(i) *Submittal dates*. The Precompliance Report shall be submitted to the Administrator no later than December 19, 2000. If a Precompliance Report was submitted prior to June 19, 2000 and no changes need to be made to that Precompliance Report, the owner or operator shall re-submit the earlier report or submit notification that the previously submitted report is still valid. Unless the Administrator objects to a request submitted in the Precompliance Report within 45 days after its receipt, the request shall be deemed approved. For new affected sources, the Precompliance Report shall be submitted to the Administrator with the application for approval of construction or reconstruction required in paragraph (b)(2) of this section. Supplements to the Precompliance Report may be submitted as specified in paragraph (e)(3)(ix) of this section.

(ii) A request for an extension for compliance, as specified in § 63.481(e), may be submitted in the Precompliance Report. The request for a compliance extension shall include the data outlined in § 63.6(i)(6)(i)(A), (B), and (D), as required in § 63.481(e)(1).

(iii) The alternative monitoring parameter information required in paragraph (f) of this section shall be submitted in the Precompliance Report if, for any emission point, the owner or operator of an affected source seeks to comply through the use of a control technique other than those for which monitoring parameters are specified in this subpart or in subpart G of this part, or seeks to comply by monitoring a different parameter than those specified in this subpart or in subpart G of this part.

(iv) If the affected source seeks to comply using alternative continuous monitoring and recordkeeping as specified in paragraph (g) of this section, the owner or operator shall submit a request for approval in the Precompliance Report.

(v) The owner or operator shall report the intent to use alternative controls to comply with the provisions of this subpart in the Precompliance Report. The Administrator may deem alternative controls to be equivalent to the controls required by the standard, under the procedures outlined in § 63.6(g).

(vi) If a request for approval to use engineering assessment to estimate emissions from a batch emissions episode, as described in § 63.488(b)(6)(i)(C) is being made, the information required by § 63.488(b)(6)(iii)(B) shall be submitted in the Precompliance Report.

(vii) If an owner or operator establishes parameter monitoring levels according to the procedures contained in § 63.505(c) or (d), the following information shall be submitted in the Precompliance Report:

(A) Identification of which procedures (*i.e.*, § 63.505(c) or (d)) are to be used; and

(B) A description of how the parameter monitoring level is to be established. If the procedures in § 63.505(c) are to be used, a description of how performance test data will be used shall be included.

(viii) If the owner or operator is requesting approval to incorporate a provision for ceasing to collect monitoring data, during a start-up, shutdown, or malfunction, into the start-up, shutdown, and malfunction plan, when that monitoring equipment would be damaged if it did not cease to collect monitoring data, the information specified in paragraphs (e)(3)(viii)(A) and (B) shall be supplied in the Precompliance Report or in a supplement to the Precompliance Report. The Administrator shall evaluate the supporting documentation and shall approve the request only if, in the Administrator's judgment, the specific monitoring equipment would be damaged by the contemporaneous start-up, shutdown, or malfunction.

(A) Documentation supporting a claim that the monitoring equipment would be damaged by the contemporaneous start-up, shutdown, or malfunction; and

(B) A request to incorporate such a provision for ceasing to collect monitoring data during a start-up, shutdown, or malfunction, into the start-up, shutdown, and malfunction plan.

(ix) Supplements to the Precompliance Report may be submitted as specified in paragraph (e)(3)(ix)(A), or (e)(3)(ix)(B) of this section. Unless the Administrator objects to a request submitted in a supplement to the Precompliance Report within 45 days after its receipt, the request shall be deemed approved.

(A) Supplements to the Precompliance Report may be submitted to clarify or modify information previously submitted.

(B) Supplements to the Precompliance Report may be submitted to request approval to use alternative monitoring parameters, as specified in paragraph (e)(3)(iii) of this section; to use alternative continuous monitoring and recordkeeping, as specified in paragraph (e)(3)(iv) of this section; to use alternative controls, as specified in paragraph (e)(3)(v) of this section; to use engineering assessment to estimate emissions from a batch emissions episode, as specified in paragraph (e)(3)(vi) of this section; to establish parameter monitoring levels according to the procedures contained in § 63.505(c) or (d), as specified in paragraph (e)(3)(vii) of this section; or to include a provision for ceasing to collect monitoring data during a start-up, shutdown, or malfunction, in the start-up, shutdown, and malfunction plan, when that monitoring equipment would be damaged if it did not cease to collect monitoring data, as specified in paragraph (e)(3)(viii) of this section.

(4) *Emissions Averaging Plan.* For all existing affected sources using emissions averaging, an Emissions Averaging Plan shall be submitted for approval according to the schedule and procedures described in paragraph (e)(4)(i) of this section. The Emissions Averaging Plan shall contain the information specified in paragraph (e)(4)(ii) of this section, unless the information required in paragraph (e)(4)(ii) of this section is submitted with an operating permit application. An owner or operator of an affected source who submits an operating permit application instead of an Emissions Averaging Plan shall submit the information specified in paragraph (e)(8) of this section. In addition, a supplement to the Emissions Averaging Plan, as required under paragraph (e)(4)(iii) of this section, is to be submitted whenever additional alternative controls or operating scenarios may be used to comply with this subpart. Updates to the Emissions Averaging Plan shall be submitted in accordance with paragraph (e)(4)(iv) of this section.

(i) *Submittal and approval.* The Emissions Averaging Plan shall be submitted no later than September 19, 2000, and is subject to Administrator approval. If an Emissions Averaging Plan was submitted prior to June 19, 2000 and no changes need to be made to that Emissions Averaging Plan, the owner or operator shall re-submit the earlier plan or submit notification that the previously submitted plan is still valid. The Administrator shall determine within 120 days whether the Emissions Averaging Plan submitted presents sufficient information. The Administrator shall either approve the Emissions Averaging Plan, request changes, or request that the owner or operator submit additional information. Once the Administrator receives sufficient information, the Administrator shall approve, disapprove, or request changes to the plan within 120 days.

(ii) *Information required.* The Emissions Averaging Plan shall contain the information listed in paragraphs (e)(4)(ii)(A) through (e)(4)(ii)(N) of this section for all emission points included in an emissions average.

* * * * *

(B) The required information shall include the projected emission debits and credits for each emission point and the sum for the emission points involved in the average calculated according to § 63.503. The projected credits shall be greater than or equal to the projected debits, as required under § 63.503(e)(3).

* * * * *

(D) The required information shall include the specific identification of each emission point affected by a pollution prevention measure. To be considered a pollution prevention measure, the criteria in § 63.503(j)(1) shall be met. If the same pollution prevention measure reduces or eliminates emissions from multiple emission points in the average, the owner or operator shall identify each of these emission points.

* * * * *

(F) * * *

(*1*) The required documentation shall include the values of the parameters used to determine whether the emission point is Group 1 or Group 2. Where a TRE index value is used for continuous front-end process vent group determination, the estimated or measured values of the parameters used in the TRE equation in § 63.115(d) and the resulting TRE index value shall be submitted.

(*2*) The required documentation shall include the estimated values of all parameters needed for input to the emission debit and credit calculations in § 63.503(g) and (h). These parameter values shall be specified in the affected source's Emissions Averaging Plan (or operating permit) as enforceable operating conditions. Changes to these parameters shall be reported in an update to the Emissions Averaging Plan, as required by paragraph (e)(4)(iv)(B)(*2*) of this section.

* * * * *

(*4*) The required documentation shall include the anticipated nominal efficiency if a control technology achieving a greater percent emission reduction than the efficiency of the reference control technology is or will be applied to the emission point. The procedures in § 63.503(i) shall be followed to apply for a nominal efficiency, and the report specified in paragraph (e)(7)(ii) of this section shall be submitted with the Emissions Averaging Plan as specified in paragraph (e)(7)(ii)(A) of this section.

(*5*) The required documentation shall include the monitoring plan specified in § 63.122(b), to include the information specified in § 63.120(d)(2)(i) and in either § 63.120(d)(2)(ii) or (d)(2)(iii) for each storage vessel controlled with a closed-vent system using a control device other than a flare.

(G) * * *

(*1*) Each continuous front-end process vent subject to § 63.485 controlled by a pollution prevention measure or control technique for which monitoring parameters or inspection procedures are not specified in § 63.114; and

* * * * *

(H) * * *

(*2*) The required documentation shall include the estimated values of all parameters needed for input to the wastewater emission credit and debit calculations in § 63.503(g)(5) and (h)(5). These parameter values shall be specified in the affected source's Emissions Averaging Plan (or operating permit) as enforceable operating conditions. Changes to these parameters shall be reported as required by paragraph (e)(4)(iv)(B)(*2*) of this section.

(*3*) * * *

(*i*) A control technology that achieves an emission reduction less than or equal to the emission reduction that would otherwise have been achieved by a steam stripper designed to the specifications found in § 63.138(g) is or

will be applied to the wastewater stream, or

* * * * *

(*4*) * * *

(*i*) A control technology that achieves an emission reduction greater than the emission reduction that would have been achieved by a steam stripper designed to the specifications found in § 63.138(g), is or will be applied to the wastewater stream; or

* * * * *

(I) For each pollution prevention measure, treatment process, or control device used to reduce air emissions of organic HAP from wastewater and for which no monitoring parameters or inspection procedures are specified in § 63.143, the information specified in paragraph (f) of this section (Alternative Monitoring Parameters) shall be included in the Emissions Averaging Plan.

(J) The required information shall include documentation of the data required by estimated values of all parameters needed for input to the emission debit and credit calculations in § 63.503(g) and (h) for each process back-end operation included in an emissions average. These values shall be specified in the affected source's Emissions Averaging Plan (or operating permit) as enforceable operating conditions. Changes to these parameters shall be reported as required by paragraph (e)(4)(iv)(B)(*2*) of this section.

(K) The required information shall include documentation of the information required by § 63.503(k). The documentation shall demonstrate that the emissions from the emission points proposed to be included in the average will not result in greater hazard or, at the option of the Administrator, greater risk to human health or the environment than if the emission points were not included in an emissions average.

(L) * * *

(*2*) The required information shall include the estimated values of all parameters needed for input to the emission debit and credit calculations in § 63.503(g) and (h). These parameter values shall be specified in the affected source's Emissions Averaging Plan (or operating permit) as enforceable operating conditions. Changes to these parameters shall be reported as required by paragraph (e)(4)(iv) of this section.

* * * * *

(N) The required information shall include documentation of the data required by § 63.503(k). The documentation shall demonstrate that the emissions from the emission points proposed to be included in the emissions average will not result in greater hazard or, at the option of the Administrator, greater risk to human health or the environment than if the emission points were not included in an emissions average.

(iii) *Supplement to Emissions Averaging Plan.* The owner or operator required to prepare an Emissions Averaging Plan under paragraph (e)(4) of this section shall also prepare a supplement to the Emissions Averaging Plan for any additional alternative controls or operating scenarios that may be used to achieve compliance.

(iv) *Updates to Emissions Averaging Plan.* The owner or operator of an affected source required to submit an Emissions Averaging Plan under paragraph (e)(4) of this section shall also submit written updates of the Emissions Averaging Plan to the Administrator for approval under the circumstances described in paragraphs (e)(4)(iv)(A) through (e)(4)(iv)(C) of this section unless the relevant information has been included and submitted in an operating permit application or amendment.

(A) The owner or operator who plans to make a change listed in either paragraph (e)(4)(iv)(A)(*1*) or (e)(4)(iv)(A)(*2*) of this section shall submit an Emissions Averaging Plan update at least 120 days prior to making the change.

* * * * *

(B) The owner or operator who has made a change as defined in paragraph (e)(4)(iv)(B)(*1*) or (e)(4)(iv)(B)(*2*) of this section shall submit an Emissions Averaging Plan update within 90 days after the information regarding the change is known to the affected source. The update may be submitted in the next quarterly periodic report if the change is made after the date the Notification of Compliance Status is due.

* * * * *

(C) The Administrator shall approve or request changes to the Emissions Averaging Plan update within 120 days of receipt of sufficient information regarding the change for emission points included in emissions averages.

(5) *Notification of Compliance Status.* For existing and new affected sources, a Notification of Compliance Status shall be submitted. For equipment leaks subject to § 63.502, the owner or operator shall submit the information required in § 63.182(c) in the Notification of Compliance Status within 150 days after the first applicable compliance date for equipment leaks in the affected source, and an update shall be provided in the first Periodic Report that is due at least 150 days after each subsequent applicable compliance date for equipment leaks in the affected source. For all other emission points, including heat exchange systems, the Notification of Compliance Status shall contain the information listed in paragraphs (e)(5)(i) through (e)(5)(xii) of this section, as applicable, and shall be submitted no later than 150 days after the compliance dates specified in this subpart.

(i) The results of any emission point group determinations, process section applicability determinations, performance tests, inspections, continuous monitoring system performance evaluations, any other information used to demonstrate compliance, values of monitored parameters established during performance tests, and any other information required to be included in the Notification of Compliance Status under § 63.481(k), § 63.122, and § 63.484 for storage vessels, § 63.117 for continuous front-end process vents, § 63.492 for batch front-end process vents, § 63.499 for back-end process operations, § 63.146 for process wastewater, and § 63.503 for emission points included in an emissions average. In addition, the owner or operator of an affected source shall comply with paragraphs (e)(5)(i)(A) and (e)(5)(i)(B) of this section.

(A) For performance tests, group determinations, and process section applicability determinations that are based on measurements, the Notification of Compliance Status shall include one complete test report, as described in paragraph (e)(5)(i)(B) of this section, for each test method used for a particular kind of emission point. For additional tests performed for the same kind of emission point using the same method, the results and any other information, from the test report, that is requested on a case-by-case basis by the Administrator shall be submitted, but a complete test report is not required.

* * * * *

(ii) For each monitored parameter for which a maximum or minimum level is required to be established under § 63.114(e) and § 63.485(k) for continuous front-end process vents, § 63.489 for batch front-end process vents and aggregate batch vent streams, § 63.497 for back-end process operations, § 63.143(f) for process wastewater, § 63.503(m) for emission points in emissions averages, paragraph (e)(8) of this section, or paragraph (f) of this section, the information specified in paragraphs (e)(5)(ii)(A) through (e)(5)(ii)(E) of this section shall be submitted in the Notification of Compliance Status, unless this

information has been established and provided in the operating permit application. Further, as described in § 63.484(k), for those storage vessels for which the monitoring plan required by § 63.484(k) specifies compliance with the provisions of § 63.505, the owner or operator shall provide the information specified in paragraphs (e)(5)(ii)(A) through (e)(5)(ii)(D) of this section for each monitoring parameter, unless this information has been established and provided in the operating permit application. For those storage vessels for which the monitoring plan required by § 63.484(k) does not require compliance with the provisions of § 63.505, the owner or operator shall provide the information specified in § 63.120(d)(3) as part of the Notification of Compliance Status, unless this information has been established and provided in the operating permit application.

* * * * *

(iii) For emission points included in an emissions average, the Notification of Compliance Status shall contain the values of all parameters needed for input to the emission credit and debit equations in § 63.503(g) and (h), calculated or measured according to the procedures in § 63.503(g) and (h), and the resulting calculation of credits and debits for the first quarter of the year. The first quarter begins on the compliance date specified.

(iv) [Reserved.]

(v) The determination of applicability for flexible operation units as specified in § 63.480(f).

* * * * *

(vii) The results for each predominant use determination made under § 63.480(g), for storage vessels assigned to an affected source subject to this subpart.

(viii) The results for each predominant use determination made under § 63.480(h) for recovery operations equipment assigned to an affected source subject to this subpart.

(ix) For owners and operators of Group 2 batch front-end process vents establishing a batch mass input limitation, as specified in § 63.490(f), the affected source's operating year for purposes of determining compliance with the batch mass input limitation.

(x) If any emission point is subject to this subpart and to other standards as specified in § 63.481(k), and if the provisions of § 63.481(k) allow the owner or operator to choose which testing, monitoring, reporting, and recordkeeping provisions will be followed, then the Notification of Compliance Status shall indicate which rule's requirements will be followed for testing, monitoring, reporting, and recordkeeping.

(xi) An owner or operator who transfers a Group 1 wastewater stream or residual removed from a Group 1 wastewater stream for treatment pursuant to § 63.132(g) shall include in the Notification of Compliance Status the name and location of the transferee and a description of the Group 1 wastewater stream or residual sent to the treatment facility.

(xii) An owner or operator complying with paragraph (h)(1) of this section shall notify the Administrator of the election to comply with paragraph (h)(1) of this section as part of the Notification of Compliance Status, or as part of the appropriate Periodic Report, as specified in paragraph (e)(6)(ix) of this section.

(6) *Periodic Reports.* For existing and new affected sources, the owner or operator shall submit Periodic Reports as specified in paragraphs (e)(6)(i) through (e)(6)(xii) of this section. In addition, for equipment leaks subject to § 63.502, the owner or operator shall submit the information specified in § 63.182(d) under the conditions listed in § 63.182(d), and for heat exchange systems subject to § 63.502(n), the owner or operator shall submit the information specified in § 63.104(f)(2) as part of the Periodic Report required by this paragraph (e)(6). Section § 63.505 shall govern the use of monitoring data to determine compliance for Group 1 emission points and for Group 1 and Group 2 emission points included in emissions averages with the following exception: As discussed in § 63.484(k), for storage vessels to which the provisions of § 63.505 do not apply, as specified in the monitoring plan required by § 63.120(d)(2), the owner or operator is required to comply with the requirements set out in the monitoring plan, and monitoring records may be used to determine compliance.

(i) Except as specified in paragraphs (e)(6)(xi) and (e)(6)(xii) of this section, a report containing the information in paragraph (e)(6)(ii) of this section or paragraphs (e)(6)(iii) through (e)(6)(x) of this section, as appropriate, shall be submitted semiannually no later than 60 days after the end of each 6-month period. The first report shall be submitted no later than 240 days after the date the Notification of Compliance Status is due and shall cover the 6-month period beginning on the date the Notification of Compliance Status is due.

(ii) If none of the compliance exceptions in paragraphs (e)(6)(iii) through (e)(6)(ix) of this section occurred during the 6-month period, the Periodic Report required by paragraph (e)(6)(i) of this section shall be a statement that there were no compliance exceptions as described in this paragraph for the 6-month period covered by that report and that none of the activities specified in paragraphs (e)(6)(iii) through (e)(6)(ix) of this section occurred during the 6-month period covered by that report.

(iii) * * *

(A) All information specified in § 63.122(a)(4) for storage vessels, §§ 63.117(a)(3) and 63.118(f) and 63.485(s)(5) for continuous front-end process vents, § 63.492 for batch front-end process vents and aggregate batch vent streams, § 63.499 for back-end process operations, § 63.104(b)(4) for heat exchange systems, and §§ 63.146(c) through 63.146(f) for process wastewater.

(B) The daily average values or batch cycle daily average values of monitored parameters for all excursions, as defined in § 63.505(g) and § 63.505(h). For excursions caused by lack of monitoring data, the start-time and duration of periods when monitoring data were not collected shall be specified.

(C) [Reserved]

(D) The information in paragraphs (e)(6)(iii)(D)(*1*) through (e)(6)(iii)(D)(*5*) of this section, as applicable:

* * * * *

(*2*) Notification if a process change is made such that the group status of any emission point changes from Group 2 to Group 1. The owner or operator is not required to submit a notification of a process change if that process change caused the group status of an emission point to change from Group 1 to Group 2. However, until the owner or operator notifies the Administrator that the group status of an emission point has changed from Group 1 to Group 2, the owner or operator is required to continue to comply with the Group 1 requirements for that emission point. This notification may be submitted at any time.

(*3*) Notification if one or more emission points (other than equipment leaks) or one or more EPPU is added to an affected source. The owner or operator shall submit the information contained in paragraphs (e)(6)(iii)(D)(*3*)(*i*) through (e)(6)(iii)(D)(*3*)(*ii*) of this section.

(*i*) A description of the addition to the affected source; and

(*ii*) Notification of the group status of the additional emission point or all emission points in the EPPU.

(*4*) Notification if a standard operating procedure, as defined in § 63.500(a)(2), is changed and the change has the potential for increasing the

concentration of carbon disulfide in the crumb dryer exhaust. This notification shall also include test results of the carbon disulfide concentration resulting from the new standard operating procedure.

(5) For process wastewater streams sent for treatment pursuant to § 63.132(g), reports of changes in the identity of the treatment facility or transferee.

* * * * *

(iv) For each batch front-end process vent with a batch mass input limitation, every second Periodic Report shall include the mass of HAP or material input to the batch unit operation during the 12-month period covered by the preceding and current Periodic Reports, and a statement of whether the batch front-end process vent was in or out of compliance with the batch mass input limitation.

(v) * * *

(B) For additional tests performed for the same kind of emission point using the same method, results and any other information, pertaining to the performance test, that is requested on a case-by-case basis by the Administrator shall be submitted, but a complete test report is not required.

(vi) Notification of a change in the primary product of an EPPU, in accordance with the provisions in § 63.480(f). This includes a change in primary product from one elastomer product to either another elastomer product or to a non-elastomer product.

(vii) The results for each change made to a predominant use determination made under § 63.480(g) for a storage vessel that is assigned to an affected source subject to this subpart after the change.

(viii) The results for each change made to a predominant use determination made under § 63.480(h) for recovery operations equipment assigned to an affected source subject to this subpart after the change.

(ix) An owner or operator complying with paragraph (h)(1) of this section shall notify the Administrator of the election to comply with paragraph (h)(1) of this section as part of the Periodic Report or as part of the Notification of Compliance Status as specified in paragraph (e)(5)(xi) of this section.

(x) An owner or operator electing not to retain daily average or batch cycle daily average values under paragraph (h)(2) of this section shall notify the Administrator as specified in paragraph (h)(2)(i) of this section.

(xi) The owner or operator of an affected source shall submit quarterly reports for all emission points included in an emissions average as specified in paragraphs (e)(6)(xi)(A) through (e)(6)(xi)(C) of this section.

(A) The quarterly reports shall be submitted no later than 60 days after the end of each quarter. The first report shall be submitted with the Notification of Compliance Status no later than 150 days after the compliance date.

(B) The quarterly reports shall include the information specified in paragraphs (e)(6)(xi)(B)(*1*) through (e)(6)(xi)(B)(*7*) of this section for all emission points included in an emissions average.

(*1*) The credits and debits calculated each month during the quarter;

(*2*) A demonstration that debits calculated for the quarter are not more than 1.30 times the credits calculated for the quarter, as required under § 63.503(e)(4);

(*3*) The values of any inputs to the debit and credit equations in § 63.503(g) and (h) that change from month to month during the quarter or that have changed since the previous quarter;

(*4*) Results of any performance tests conducted during the reporting period including one complete report for each test method used for a particular kind of emission point as described in paragraph (e)(6)(v) of this section;

(*5*) Reports of daily average values or batch cycle daily averages of monitored parameters for excursions as defined in § 63.505(g) or (h);

(*6*) For excursions caused by lack of monitoring data, the duration of periods when monitoring data were not collected shall be specified; and

(*7*) Any other information the affected source is required to report under the operating permit or Emissions Averaging Plan for the affected source.

(C) Every fourth quarterly report shall include the following:

(*1*) A demonstration that annual credits are greater than or equal to annual debits as required by § 63.503(e)(3); and

(*2*) A certification of compliance with all the emissions averaging provisions in § 63.503.

(xii) The owner or operator of an affected source shall submit quarterly reports for particular emission points and process sections not included in an emissions average as specified in paragraphs (e)(6)(xii)(A) through (e)(6)(xii)(D) of this section.

(A) The owner or operator of an affected source shall submit quarterly reports for a period of 1 year for an emission point or process section that is not included in an emissions average if:

(*1*) A control or recovery device for a particular emission point or process section has more excursions, as defined in § 63.505(g) or § 63.505(h), than the number of excused excursions allowed under § 63.505(i) for a semiannual reporting period; or

(*2*) The Administrator requests that the owner or operator submit quarterly reports for the emission point or process section.

(B) The quarterly reports shall include all information specified in paragraphs (e)(6)(iii) through (e)(6)(ix) of this section, as applicable to the emission point or process section for which quarterly reporting is required under paragraph (e)(6)(xii)(A) of this section. Information applicable to other emission points within the affected source shall be submitted in the semiannual reports required under paragraph (e)(6)(i) of this section.

(C) Quarterly reports shall be submitted no later than 60 days after the end of each quarter.

(D) After quarterly reports have been submitted for an emission point for 1 year without more excursions occurring (during that year) than the number of excused excursions allowed under § 63.505(i), the owner or operator may return to semiannual reporting for the emission point or process section.

(*7*) *Other reports.* Other reports shall be submitted as specified in paragraphs (e)(7)(i) through (e)(7)(v) of this section.

(i) For storage vessels, the notifications of inspections required by § 63.484 shall be submitted, as specified in § 63.122(h)(1) and (h)(2).

(ii) For owners or operators of affected sources required to request approval for a nominal control efficiency for use in calculating credits for an emissions average, the information specified in § 63.503(i) shall be submitted, as specified in paragraph (e)(7)(ii)(A) or (e)(7)(ii)(B) of this section, as appropriate.

(A) If use of a nominal control efficiency is part of the initial Emissions Averaging Plan described in paragraph (e)(4)(ii) of this section, the information in paragraph (e)(7)(iii) of this section shall be submitted with the Emissions Averaging Plan.

(B) If an owner or operator elects to use a nominal control efficiency after submittal of the initial Emissions Averaging Plan as described in paragraph (e)(4)(ii) of this section, the information required by paragraph (e)(7)(ii) of this section shall be submitted at the discretion of the owner or operator.

(iii) For back-end process operations using a control or recovery device to comply with §§ 63.493 through 63.500, the compliance redetermination report required by § 63.499(d) shall be submitted within 180 days after the process change.

(iv) When the conditions of §§ 63.480(f)(3)(iii), (f)(9), or 63.480(f)(10)(iii) are met, reports of changes to the primary product for an EPPU or process unit, as required by §§ 63.480(f)(3)(iii), 63.480(f)(9), or 63.480(f)(10)(iii)(C), respectively, shall be submitted.

(v) Owners or operators of EPPU or emission points (other than equipment leak components subject to § 63.502) that are subject to § 63.480(i)(1) or (i)(2) shall submit a report as specified in paragraphs (e)(7)(v)(A) and (B) of this section.

(A) Reports shall include:

(*1*) A description of the process change or addition, as appropriate;

(*2*) The planned start-up date and the appropriate compliance date, according to § 63.480(i)(1) or (2);

(*3*) Identification of the group status of emission points (except equipment leak components subject to the requirements in § 63.502) specified in paragraphs (e)(7)(v)(A)(*3*)(*i*) through (*iii*) of this section, as applicable.

(*i*) All the emission points in the added EPPU, as described in § 63.480(i)(1).

(*ii*) All the emission points in an affected source designated as a new affected source under § 63.480(i)(2)(i).

(*iii*) All the added or created emission points as described in § 63.480(i)(2)(ii) or (i)(2)(iii).

(*4*) If the owner or operator wishes to request approval to use alternative monitoring parameters, alternative continuous monitoring or recordkeeping, alternative controls, engineering assessment to estimate emissions from a batch emissions episode, or wishes to establish parameter monitoring levels according to the procedures contained in § 63.505(c) or (d), a Precompliance Report shall be submitted in accordance with paragraph (e)(7)(v)(B) of this section.

(B) Reports shall be submitted as specified in paragraphs (e)(7)(v)(B)(*1*) through (e)(7)(v)(B)(*3*) of this section, as appropriate.

(*1*) Owners or operators of an added EPPU subject to § 63.480(i)(1) shall submit a report no later than 180 days prior to the compliance date for the EPPU.

(*2*) Owners or operators of an affected source designated as a new affected source under § 63.480(i)(2)(i) shall submit a report no later than 180 days prior to the compliance date for the affected source.

(*3*) Owners and operators of any emission point (other than equipment leak components subject to § 63.502) subject to § 63.480(i)(2)(ii) or (i)(2)(iii) shall submit a report no later than 180 days prior to the compliance date for those emission points.

(8) *Operating permit application.* An owner or operator who submits an operating permit application instead of an Emissions Averaging Plan or a Precompliance Report shall include the following information with the operating permit application:

* * * * *

(f) *Alternative monitoring parameters.* The owner or operator of an affected source who has been directed by any section of this subpart, or any section of another subpart referenced by this subpart, that expressly references this paragraph (f) or § 63.151(f) to set unique monitoring parameters, or who requests approval to monitor a different parameter than those listed in § 63.484 for storage vessels, § 63.114 for continuous front-end process vents, § 63.489 for batch front-end process vents and aggregate batch vent streams, § 63.497 for back-end process operations, or § 63.143 for process wastewater shall submit the information specified in paragraphs (f)(1) through (f)(3) of this section in the Precompliance Report, as required by paragraph (e)(3) of this section. The owner or operator shall retain for a period of 5 years each record required by paragraphs (f)(1) through (f)(3) of this section.

(3) The required information shall include a description of the proposed monitoring, recordkeeping, and reporting system, to include the frequency and content of monitoring, recordkeeping, and reporting. Further, the rationale for the proposed monitoring, recordkeeping, and reporting system shall be included if either condition in paragraph (f)(3)(i) or (f)(3)(ii) of this section is met:

* * * * *

(g) *Alternative continuous monitoring and recordkeeping.* An owner or operator choosing not to implement the continuous parameter operating and recordkeeping provisions listed in § 63.485 for continuous front-end process vents, § 63.486 for batch front-end process vents and aggregate batch vent streams, § 63.493 for back-end process operations, and § 63.501 for process wastewater, may instead request approval to use alternative continuous monitoring and recordkeeping provisions according to the procedures specified in paragraphs (g)(1) through (g)(4) of this section. Requests shall be submitted in the Precompliance Report as specified in paragraph (e)(3)(iv) of this section, if not already included in the operating permit application, and shall contain the information specified in paragraphs (g)(2)(ii) and (g)(3)(ii) of this section, as applicable.

(1) The provisions in § 63.8(f)(5)(i) shall govern the review and approval of requests.

(2) * * *

(ii) * * *

(D) Demonstration to the Administrator's satisfaction that the proposed monitoring frequency is sufficient to represent control or recovery device operating conditions, considering typical variability of the specific process and control or recovery device operating parameter being monitored.

(3) An owner or operator may request approval to use an automated data compression recording system that does not record monitored operating parameter values at a set frequency, but that records all values that meet set criteria for variation from previously recorded values, in accordance with paragraphs (g)(3)(i) and (g)(3)(ii) of this section.

(i) * * *

(A) Measure the operating parameter value at least once during every 15 minute period;

* * * * *

(4) An owner or operator may request approval to use other alternative monitoring systems according to the procedures specified in § 63.8(f)(4).

(h) *Reduced recordkeeping program.* For any parameter with respect to any item of equipment, the owner or operator may implement the recordkeeping requirements in paragraph (h)(1) or (h)(2) of this section as alternatives to the continuous operating parameter monitoring and recordkeeping provisions that would otherwise apply under this subpart. The owner or operator shall retain for a period of 5 years each record required by paragraph (h)(1) or (h)(2) of this section, except as otherwise provided in paragraph (h)(1)(vi)(D) of this section.

(1) The owner or operator may retain only the daily average or the batch cycle daily average value, and is not required to retain more frequent monitored operating parameter values, for a monitored parameter with respect to an item of equipment, if the requirements of paragraphs (h)(1)(i) through (h)(1)(vi) of this section are met. An owner or operator electing to comply with the requirements of paragraph (h)(1) of this section shall notify the Administrator in the Notification of Compliance Status as specified in paragraph (e)(5)(xii) of this section, or, if the Notification of Compliance Status has already been submitted, in the Periodic Report

immediately preceding implementation of the requirements of paragraph (h)(1) of this section, as specified in paragraph (e)(6)(ix) of this section.

* * * * *

(ii) * * *

(B) The running average is based on at least six one-hour average values; and

* * * * *

(iv) The monitoring system will alert the owner or operator by an alarm or other means, if the running average parameter value calculated under paragraph (h)(1)(ii) of this section reaches a set point that is appropriately related to the established limit for the parameter that is being monitored.

* * * * *

(vi) The owner or operator shall retain the records identified in paragraphs (h)(1)(vi)(A) through (h)(1)(vi)(D) of this section.

* * * * *

(B) A description of the applicable monitoring system(s), and how compliance will be achieved with each requirement of paragraphs (h)(1)(i) through (h)(1)(v) of this section. The description shall identify the location and format (*e.g.*, on-line storage, log entries) for each required record. If the description changes, the owner or operator shall retain both the current and the most recent superseded description. The description, and the most recent superseded description, shall be retained as provided in paragraph (a) of this section, except as provided in paragraph (h)(1)(vi)(D) of this section.

(C) A description, and the date, of any change to the monitoring system that would reasonably be expected to impair its ability to comply with the requirements of paragraph (h)(1) of this section.

(D) Owners and operators subject to paragraph (h)(1)(vi)(B) of this section shall retain the current description of the monitoring system as long as the description is current. The current description shall, at all times, be retained on-site or be accessible from a central location by computer or other means that provides access within 2 hours after a request. The owner or operator shall retain all superseded descriptions for at least 5 years after the date of their creation. Superseded descriptions shall be retained on-site (or accessible from a central location by computer or other means that provides access within 2 hours after a request) for at least 6 months after their creation. Thereafter, superseded descriptions may be stored off-site.

(2) * * *

(i) If the owner or operator elects not to retain the daily average or batch cycle daily average values, the owner or operator shall notify the Administrator in the next Periodic Report as specified in paragraph (e)(6)(x) of this section. The notification shall identify the parameter and unit of equipment.

* * * * *

(iii) The owner or operator shall retain the records specified in paragraphs (h)(1)(i) through(h)(1)(iii) of this section, for the duration specified in paragraph (h) of this section. For any calendar week, if compliance with paragraphs (h)(1)(i) through (h)(1)(iii) of this section does not result in retention of a record of at least one occurrence or measured parameter value, the owner or operator shall record and retain at least one parameter value during a period of operation other than a start-up, shutdown, or malfunction.

(iv) * * *

(A) The daily average or batch cycle daily average value during any start-up, shutdown, or malfunction shall not be considered an excursion for purposes of paragraph (h)(2) of this section, if the owner or operator follows the applicable provisions of the start-up, shutdown, and malfunction plan required by § 63.6(e)(3).

* * * * *

28a. Revise Tables 1, 2, 5, 6, 7, and 8, and add Table 9 to Subpart U of part 63, to read as follows:

TABLE 1 TO SUBPART U OF PART 63.—APPLICABILITY OF GENERAL PROVISIONS TO SUBPART U AFFECTED SOURCES

Reference	Applies to subpart U	Explanation
63.1(a)(1)	Yes	§ 63.482 specifies definitions in addition to or that supersede definitions in § 63.2.
63.1(a)(2)	Yes	
63.1(a)(3)	Yes	§ 63.481(f) through (k) and § 63.160(b) identify those standards which may apply in addition to the requirements of subparts U and H of this part, and specify how compliance shall be achieved.
63.1(a)(4)	Yes	Subpart U (this table) specifies the applicability of each paragraph in subpart A to subpart U.
63.1(a)(5)	No	[Reserved.]
63.1(a)(6)–63.1(a)(8)	Yes	
63.1(a)(9)	No	[Reserved.]
63.1(a)(10)	Yes	
63.1(a)(11)	Yes	
63.1(a)(12)–63.1(a)(14)	Yes	
63.1(b)(1)	No	§ 63.480(a) contains specific applicability criteria.
63.1(b)(2)	Yes	
63.1(b)(3)	No	§ 63.480(b) provides documentation requirements for EPPUs not considered affected sources.
63.1(c)(1)	Yes	Subpart U (this table) specifies the applicability of each paragraph in subpart A to subpart U.
63.1(c)(2)	No	Area sources are not subject to subpart U.
63.1(c)(3)	No	[Reserved.]
63.1(c)(4)	Yes	
63.1(c)(5)	Yes	Except that affected sources are not required to submit notifications that are not required by subpart U.
63.1(d)	No	[Reserved.]
63.1(e)	Yes	
63.2	Yes	§ 63.482 specifies those subpart A definitions that apply to subpart U.
63.3	Yes	
63.4(a)(1)–63.4(a)(3)	Yes	
63.4(a)(4)	No	[Reserved.]

TABLE 1 TO SUBPART U OF PART 63.—APPLICABILITY OF GENERAL PROVISIONS TO SUBPART U AFFECTED SOURCES—Continued

Reference	Applies to subpart U	Explanation
63.4(a)(5)	Yes	
63.4(b)	Yes	
63.4(c)	Yes	
63.5(a)(1)	Yes	Except the terms "source" and "stationary source" should be interpreted as having the same meaning as "affected source".
63.5(a)(2)	Yes	
63.5(b)(1)	Yes	Except § 63.480(i) defines when construction or reconstruction is subject to new source standards.
63.5(b)(2)	No	[Reserved.]
63.5(b)(3)	Yes.	
63.5(b)(4)	Yes	Except that the Initial Notification and § 63.9(b) requirements do not apply.
63.5(b)(5)	Yes.	
63.5(b)(6)	Yes	Except that § 63.480(i) defines when construction or reconstruction is subject to the new source standards.
63.5(c)	No	[Reserved.]
63.5(d)(1)(i)	Yes	Except that the references to the Initial Notification and § 63.9(b)(5) do not apply.
63.5(d)(1)(ii)	Yes	Except that § 63.5(d)(1)(ii)(H) does not apply.
63.5(d)(1)(iii)	No	§ 63.506(e)(5) and § 63.502(f) specify Notification of Compliance Status requirements.
63.5(d)(2)	No.	
63.5(d)(3)	Yes	Except § 63.5(d)(3)(ii) does not apply, and equipment leaks subject to § 63.502 are exempt.
63.5(d)(4)	Yes.	
63.5(e)	Yes.	
63.5(f)(1)	Yes.	
63.5(f)(2)	Yes	Except that where § 63.9(b)(2) is referred to, the owner or operator need not comply.
63.6(a)	Yes.	
63.6(b)(1)	No	The dates specified in § 63.481(b) apply, instead.
63.6(b)(2)	No.	
63.6(b)(3)	No.	
63.6(b)(4)	No.	
63.6(b)(5)	No.	
63.6(b)(6)	No	[Reserved.]
63.6(b)(7)	No.	
63.6(c)(1)	Yes	§ 63.481 specifies the compliance date.
63.6(c)(2)	No.	
63.6(c)(3)	No	[Reserved.]
63.6(c)(4)	No	[Reserved.]
63.6(c)(5)	Yes.	
63.6(d)	No	[Reserved.]
63.6(e)	Yes	Except as otherwise specified for individual paragraphs. Does not apply to Group 2 emission points, unless they are included in an emissions average.[a]
63.6(e)(1)(i)	No	This is addressed by § 63.480(j)(4).
63.6(e)(1)(ii)	Yes.	
63.6(e)(1)(iii)	Yes.	
63.6(e)(2)	Yes.	
63.6(e)(3)(i)	Yes	For equipment leaks (subject to § 63.502), the start-up, shutdown, and malfunction plan requirement of § 63.6(e)(3)(i) is limited to control devices and is optional for other equipment. The start-up, shutdown, and malfunction plan may include written procedures that identify conditions that justify a delay of repair.
63.6(e)(3)(i)(A)	No	This is addressed by § 63.480(j)(4).
63.6(e)(3)(i)(B)	Yes.	
63.6(e)(3)(i)(C)	Yes.	
63.6(e)(3)(ii)	Yes.	
63.6(e)(3)(iii)	No	Recordkeeping and reporting are specified in § 63.506(b)(1).
63.6(e)(3)(iv)	No	Recordkeeping and reporting are specified in § 63.506(b)(1).
63.6(e)(3)(v)	Yes.	
63.6(e)(3)(vi)	Yes.	
63.6(e)(3)(vii)	Yes.	
63.6(e)(3)(vii)(A)	Yes.	
63.6(e)(3)(vii)(B)	Yes	Except the plan shall provide for operation in compliance with § 63.480(j)(4).
63.6(e)(3)(vii)(C)	Yes.	
63.6(e)(3)(viii)	Yes.	
63.6(f)(1)	Yes.	
63.6(f)(2)	Yes	Except 63.7(c), as referred to in § 63.6(f)(2)(iii)(D) does not apply, and except that § 63.6(f)(2)(ii) does not apply to equipment leaks subject to § 63.502.
63.6(f)(3)	Yes.	

TABLE 1 TO SUBPART U OF PART 63.—APPLICABILITY OF GENERAL PROVISIONS TO SUBPART U AFFECTED SOURCES—Continued

Reference	Applies to subpart U	Explanation
63.6(g)	Yes.	
63.6(h)	No	Subpart U does not require opacity and visible emission standards.
63.6(i)(1)	Yes.	
63.6(i)(2)	Yes.	
63.6(i)(3)	Yes.	
63.6(i)(4)(i)(A)	Yes.	
63.6(i)(4)(i)(B)	No	Dates are specified in § 63.481(e) and § 63.506(e)(3)(i).
63.6(i)(4)(ii)	No.	
63.6(i)(5)–(14)	Yes.	
63.6(i)(15)	No	[Reserved.]
63.6(i)(16)	Yes.	
63.6(j)	Yes.	
63.7(a)(1)	Yes.	
63.7(a)(2)	No	§ 63.506(e)(5) specifies the submittal dates of performance test results for all emission points except equipment leaks; for equipment leaks, compliance demonstration results are reported in the Periodic Reports.
63.7(a)(3)	Yes.	
63.7(b)	No	§ 63.504(a)(4) specifies notification requirements.
63.7(c)	No	Except if the owner or operator chooses to submit an alternative nonopacity emission standard for approval under § 63.6(g).
63.7(d)	Yes.	
63.7(e)(1)	Yes	Except that all performance tests shall be conducted at maximum representative operating conditions achievable at the time without disruption of operations or damage to equipment.
63.7(e)(2)	Yes.	
63.7(e)(3)	No	Subpart U specifies requirements.
63.7(e)(4)	Yes.	
63.7(f)	Yes	Except that § 63.144(b)(5)(iii)(A) & (B) shall apply for process wastewater. Also, since a site specific test plan is not required, the notification deadline in § 63.7(f)(2)(i) shall be 60 days prior to the performance test, and in § 63.7(f)(3) approval or disapproval of the alternative test method shall not be tied to the site specific test plan.
63.7(g)	Yes	Except that the requirements in § 63.506(e)(5) shall apply instead of references to the Notification of Compliance Status report in 63.9(h). In addition, equipment leaks subject to § 63.502 are not required to conduct performance tests.
63.7(h)	Yes	Except § 63.7(h)(4)(ii) is not applicable, since the site-specific test plans in § 63.7(c)(2) are not required.
63.8(a)(1)	Yes.	
63.8(a)(2)	No.	
63.8(a)(3)	No	[Reserved.]
63.8(a)(4)	Yes.	
63.8(b)(1)	Yes.	
63.8(b)(2)	No	Subpart U specifies locations to conduct monitoring.
63.8(b)(3)	Yes.	
63.8(c)(1)	Yes.	
63.8(c)(1)(i)	Yes.	
63.8(c)(1)(ii)	No	For all emission points except equipment leaks, comply with § 63.506(b)(1)(i)(B); for equipment leaks, comply with § 63.181(g)(2)(iii).
63.8(c)(1)(iii)	Yes.	
63.8(c)(2)	Yes.	
63.8(c)(3)	Yes.	
63.8(c)(4)	No	§ 63.505 specifies monitoring frequency; not applicable to equipment leaks, because § 63.502 does not require continuous monitoring systems.
63.8(c)(5)–63.8(c)(8)	No.	
63.8(d)	No.	
63.8(e)	No.	
63.8(f)(1)–63.8(f)(3)	Yes.	
63.8(f)(4)(i)	No	Timeframe for submitting request is specified in § 63.506(f) or (g); not applicable to equipment leaks, because § 63.502 (through reference to subpart H) specifies acceptable alternative methods.
63.8(f)(4)(ii)	No	Contents of request are specified in § 63.506(f) or (g).
63.8(f)(4)(iii)	No.	
63.8(f)(5)(i)	Yes.	
63.8(f)(5)(ii)	No.	
63.8(f)(5)(iii)	Yes.	
63.8(f)(6)	No	Subpart U does not require CEM's.
63.8(g)	No	Data reduction procedures specified in § 63.506(d) and (h); not applicable to equipment leaks.
63.9(a)	Yes.	

TABLE 1 TO SUBPART U OF PART 63.—APPLICABILITY OF GENERAL PROVISIONS TO SUBPART U AFFECTED SOURCES—Continued

Reference	Applies to subpart U	Explanation
63.9(b)	No	Subpart U does not require an initial notification.
63.9(c)	Yes.	
63.9(d)	Yes.	
63.9(e)	No	§ 63.504(a)(4) specifies notification deadline.
63.9(f)	No	Subpart U does not require opacity and visible emission standards.
63.9(g)	No.	
63.9(h)	No	§ 63.506(e)(5) specifies Notification of Compliance Status requirements.
63.9(i)	Yes.	
63.9(j)	No.	
63.10(a)	Yes.	
63.10(b)(1)	No	§ 63.506(a) specifies record retention requirements.
63.10(b)(2)	No	Subpart U specifies recordkeeping requirements.
63.10(b)(3)	No	§ 63.480(b) requires documentation of sources that are not affected sources.
63.10(c)	No	§ 63.506 specifies recordkeeping requirements.
63.10(d)(1)	Yes.	
63.10(d)(2)	No	§ 63.506(e)(5) specifies performance test reporting requirements; not applicable to equipment leaks.
63.10(d)(3)	No	Subpart U does not require opacity and visible emission standards.
63.10(d)(4)	Yes.	
63.10(d)(5)(i)	Yes	Except that reports required by § 63.10(d)(5)(i) shall be submitted at the same time as Periodic Reports specified in § 63.506(e)(6). The start-up, shutdown, and malfunction plan, and any records or reports of start-up, shutdown, and malfunction do not apply to Group 2 emission points unless they are included in an emissions average.
63.10(d)(5)(ii)	No.	
63.10(e)	No	§ 63.506 specifies reporting requirements.
63.10(f)	Yes.	
63.11	Yes	Except that instead of § 63.11(b), § 63.504(c) shall apply.
63.12	Yes	Except that the authority of § 63.503(i) and the authority of § 63.177 (for equipment leaks) will not be delegated to States.
63.13–63.15	Yes.	

[a] The plan and any records or reports of start-up, shutdown, and malfunction do not apply to Group 2 emission points unless they are included in an emissions average.

TABLE 2 TO SUBPART U OF PART 63—APPLICABILITY OF SUBPARTS F, G, & H OF THIS PART TO SUBPART U AFFECTED SOURCES

Reference	Applies to subpart U	Explanation	Applicable section of subpart U
Subpart F			
63.100	No.		
63.101	Yes	Several definitions from 63.101 are referenced in 63.482	63.482
63.102–63.103	No.		
63.104–63.105	Yes		63.501 and 63.502
63.106–63.109	No.		
Subpart G			
63.110	No.		
63.111	Yes	Several definitions from 63.111 are referenced in 63.482	63.482
63.112	No.		
63.113–63.118	Yes	With the differences noted in 63.485(b) through 63.485(k)	63.485
63.119–63.123	Yes	With the differences noted in 63.484(c) through 63.484(s)	63.484
63.124–63.125	No	[Reserved.].	
63.126–63.130	No.		
63.131–63.147	Yes	With the differences noted in 63.501(a)(1) through 63.501(a)(19)	63.501
63.148–63.149	Yes	With the differences noted in 63.484(c) through 63.484(s) and 63.501(a)(1) through 63.501(a)(23).	63.484 and 63.501
63.150(a) through 63.150(f).	No.		
63.150(g)(1) and 63.150(g)(2).	No.		
63.150(g)(3)	Yes		63.503(g)(3)
63.150(g)(4)	No.		
63.150(g)(5)	Yes		63.503(g)(5)
63.150(h)(1) and 63.150(h)(2).	No.		
63.150(h)(3)	Yes		63.503(h)(3)
63.150(h)(4)	No.		

TABLE 2 TO SUBPART U OF PART 63—APPLICABILITY OF SUBPARTS F, G, & H OF THIS PART TO SUBPART U AFFECTED SOURCES—Continued

Reference	Applies to subpart U	Explanation	Applicable section of subpart U
63.150(h)(5)	Yes		63.503(h)(5)
63.150(i) through 63.150(o).	No.		
63.151–63.152	No.		
Subpart H			
63.160–63.183	Yes	Subpart U affected sources shall comply with all requirements of subpart H of this part, with the differences noted in § 63.502.	63.502

* * * * *

TABLE 5 TO SUBPART U OF PART 63—KNOWN ORGANIC HAP EMITTED FROM THE PRODUCTION OF ELASTOMER PRODUCTS

Organic HAP/chemical name (CAS No.)	Elastomer product/subcategory											
	BR	EPI	EPR	HBR	HYP	NEO	NBL	NBR	PBR/SBRS	PSR	SBL	SBRE
Acrylonitrile (107131)							✔	✔				
1,3 Butadiene (106990)							✔	✔	✔		✔	✔
Carbon Disulfide (75150)												✔
Carbon Tetrachloride (56235)					✔							
Chlorobenzene (108907)					✔							
Chloroform (67663)					✔							
Chloroprene (126998)						✔						
Epichlorohydrin (106898)		✔										
Ethylbenzene (100414)	✔										✔	
Ethylene Dichloride (107062)										✔		
Ethylene Oxide (75218)		✔								✔		
Formaldehyde (50000)										✔		
Hexane (110543)	✔		✔						✔			
Methanol (67561)	✔								✔			
Methyl Chloride (74873)	✔				✔							
Propylene Oxide (75569)		✔										
Styrene (100425)									✔		✔	✔
Toluene (108883)		✔	✔			✔			✔			
Xylenes (1330207)	✔											
Xylene (m-) (108383)	✔										✔	
Xylene (o-) (95476)	✔										✔	
Xylene (p-) (106423)	✔										✔	

CAS No. = Chemical Abstract Service Number
BR = Butyl Rubber
EPI = Epichlorohydrin Rubber
EPR = Ethylene Propylene Rubber
HBR = Halobutyl Rubber
HYP = Hypalon™
NEO = Neoprene
NBL = Nitrile Butadiene Latex
NBR = Nitrile Butadiene Rubber
PBR/SBRS = Polybutadiene and Styrene Butadiene Rubber by Solution
PSR = Polysulfide Rubber
SBL = Styrene Butadiene Latex
SBRE = Styrene Butadiene Rubber by Emulsion

TABLE 6 TO SUBPART U OF PART 63—GROUP 1 BATCH FRONT-END PROCESS VENTS AND AGGREGATE BATCH VENT STREAMS—MONITORING, RECORDKEEPING, AND REPORTING REQUIREMENTS

Control/recovery device	Parameter to be monitored	Recordkeeping and reporting requirements for monitored parameters
Thermal Incinerator	Firebox temperature[a]	1. Continuous records as specified in §63.491(e)(1)[b]. 2. Record and report the average firebox temperature measured during the performance test NCS[c]. 3. Record the batch cycle daily average firebox temperature as specified in §63.491(e)(2). 4. Report all batch cycle daily average temperatures that are below the minimum operating value established in the NCS or operating permit and all instances when monitoring data are not collected—PR[d e].
Catalytic Incinerator	Temperature upstream and downstream of the catalyst bed.	1. Continuous records as specified in §63.491(e)(1)[b]. 2. Record and report the average upstream and downstream temperatures and the average temperature difference across the catalyst bed measured during the performance test NCS[c]. 3. Record the batch cycle daily average upstream temperature and temperature difference across catalyst bed as specified in §63.491(e)(2). 4. Report all batch cycle daily average upstream temperatures that are below the minimum upstream value established in the NCS or operating permit PR[d e]. 5. Report all batch cycle daily average temperature differences across the catalyst bed that are below the minimum difference established in the NCS or operating permit—PR[d e]. 6. Report all instances when monitoring data are not collected.
Boiler or Process Heater with a design heat input capacity less than 44 megawatts and where the batch front-end process vents or aggregate batch vent streams are *not* introduced with or used as the primary fuel.	Firebox temperature[a]	1. Continuous records as specified in §63.491(e)(1).[b] 2. Record and report the average firebox temperature measured during the performance test—NCS.[c] 3. Record the batch cycle daily average firebox temperature as specified in §63.491(e)(2).[d] 4. Report all batch cycle daily average temperatures that are below the minimum operating value established in the NCS or operating permit and all instances when monitoring data are not collected—PR.[d e]
Flare	Presence of a flame at the pilot light	1. Hourly records of whether the monitor was continuously operating during batch emission episodes selected for control and whether a flame was continuously present at the pilot light during each hour. 2. Record and report the presence of a flame at the pilot light over the full period of the compliance determination—NCS.[c] 3. Record the times and durations of all periods during batch emission episodes when all flames at the pilot light of a flare are absent or the monitor is not operating. 4. Report the times and durations of all periods during batch emission episodes selected for control when all flames at the pilot light of a flare are absent—PR.[d]

TABLE 6 TO SUBPART U OF PART 63—GROUP 1 BATCH FRONT-END PROCESS VENTS AND AGGREGATE BATCH VENT STREAMS—MONITORING, RECORDKEEPING, AND REPORTING REQUIREMENTS—Continued

Control/recovery device	Parameter to be monitored	Recordkeeping and reporting requirements for monitored parameters
Scrubber for halogenated batch front-end process vents or aggregate batch vent streams (Note: Controlled by a combustion device other than a flare).	pH of scrubber effluent, and	1. Continuous records as specified in §63.491(e)(1).[b] 2. Record and report the average pH of the scrubber effluent measured during the performance test—NCS.[c] 3. Record the batch cycle daily average pH of the scrubber effluent as specified in §63.491(e)(2). 4. Report all batch cycle daily average pH values of the scrubber effluent that are below the minimum operating value established in the NCS or operating permit and all instances when insufficient monitoring data are collected—PR.[d e]
Scrubber for halogenated batch front-end process vents or aggregate batch vent streams (Note: Controlled by a combustion device other than a flare) (Continued).	Scrubber liquid and gas flow rates [§63.489 (b)(4)(ii)].	1. Records as specified in §63.491(e)(1).[b] 2. Record and report the scrubber liquid/gas ratio averaged over the full period of the performance test—NCS.[c] 3. Record the batch cycle daily average scrubber liquid/gas ratio as specified in §63.491(e)(2). 4. Report all batch cycle daily average scrubber liquid/gas ratios that are below the minimum value established in the NCS or operating permit and all instances when insufficient monitoring data are collected—PR.[d e]
Absorber[f]	Exit temperature of the absorbing liquid, and	1. Continuous records as specified in §63.491(e)(1).[b] 2. Record and report the average exit temperature of the absorbing liquid measured during the performance test—NCS.[c] 3. Record the batch cycle daily average exit temperature of the absorbing liquid as specified in §63.491(e)(2) for each batch cycle. 4. Report all the batch cycle daily average exit temperatures of the absorbing liquid that are below the minimum absorbing liquid exit temperature established in the NCS or operating permit and all instances when monitoring data are not collected—PR.[d e]
		Exit specific gravity of the absorbing liquid 1. Continuous records as specified in §63.491(e)(1).[b] 2. Record and report the average exit specific gravity measured during the performance test—NCS. 3. Record the batch cycle daily average exit specific gravity as specified in §63.491(e)(2). 4. Report all batch cycle daily average exit specific gravity values that are below the minimum operating value established in the NCS or operating permit and all instances when monitoring data are not collected—PR.[d e]
Condenser[f]	Exit (product side) temperature	1. Continuous records as specified in §63.491(e)(1).[b] 2. Record and report the average exit temperature measured during the performance test—NCS. 3. Record the batch cycle daily average exit temperature as specified in §63.491(e)(2).

TABLE 6 TO SUBPART U OF PART 63—GROUP 1 BATCH FRONT-END PROCESS VENTS AND AGGREGATE BATCH VENT STREAMS—MONITORING, RECORDKEEPING, AND REPORTING REQUIREMENTS—Continued

Control/recovery device	Parameter to be monitored	Recordkeeping and reporting requirements for monitored parameters
		4. Report all batch cycle daily average exit temperatures that are above the maximum operating value established in the NCS or operating permit and all instances when monitoring data are not collected—PR.[d, e]
Carbon Adsorber[f]	Total regeneration steam flow or nitrogen flow, or pressure (gauge or absolute) during carbon bed regeneration cycle(s), and.	1. Record of total regeneration steam flow or nitrogen flow, or pressure for each carbon bed regeneration cycle. 2. Record and report the total regeneration steam flow or nitrogen flow, or pressure during each carbon bed regeneration cycle during the performance test—NCS.[c] 3. Report all carbon bed regeneration cycles when the total regeneration steam flow or nitrogen flow, or pressure is above the maximum value established in the NCS or operating permit—PR.[d, e]
	Temperature of the carbon bed after regeneration and within 15 minutes of completing any cooling cycle(s).	1. Record the temperature of the carbon bed after each regeneration and within 15 minutes of completing any cooling cycle(s). 2. Record and report the temperature of the carbon bed after each regeneration and within 15 minutes of completing any cooling cycle(s) measured during the performance test—NCS.[c] 3. Report all carbon bed regeneration cycles when the temperature of the carbon bed after regeneration, or within 15 minutes of completing any cooling cycle(s), is above the maximum value established in the NCS or operating permit—PR.[d, e]
All Control Devices	Diversion to the atmosphere from the control device *or*.	1. Hourly records of whether the flow indicator was operating during batch emission episodes selected for control and whether a diversion was detected at any time during the hour, as specified in § 63.491(e)(3). 2. Record and report the times of all periods during batch emission episodes selected for control when emissions are diverted through a bypass line, or the flow indicator is not operating—PR[d]
	Monthly inspections of sealed valves	1. Records that monthly inspections were performed as specified in § 63.491(e)(4)(i). 2. Record and report all monthly inspections that show that valves are in the diverting position or that a seal has been broken—PR[d]
Absorber, Condenser, and Carbon Adsorber (as an alternative to the above).	Concentration level or reading indicated by an organic monitoring device at the outlet of the recovery device.	1. Continuous records as specified in § 63.491(e)(1).[b] 2. Record and report the average batch vent concentration level or reading measured during the performance test—NCS. 3. Record the batch cycle daily average concentration level or reading as specified in § 63.491(e)(2). 4. Report all batch cycle daily average concentration levels or readings that are above the maximum values established in the NCS or operating permit and all instances when monitoring data are not collected—PR.[d, e]

[a] Monitor may be installed in the firebox or in the duct work immediately downstream of the firebox before any substantial heat exchange is encountered.
[b] "Continuous records" is defined in § 63.111.
[c] "NCS = Notification of Compliance Status described in § 63.506(e)(5).
[d] PR = Periodic Reports described in § 63.506(e)(6) of this subpart.
[e] The periodic reports shall include the duration of periods when monitoring data are not collected as specified in § 63.506(e)(6)(iii)(C) of this subpart.

[f] Alternatively, these devices may comply with the organic monitoring device provisions listed at the end of this table.

TABLE 7 TO SUBPART U OF PART 63—OPERATING PARAMETERS FOR WHICH MONITORING LEVELS ARE REQUIRED TO BE ESTABLISHED FOR CONTINUOUS AND BATCH FRONT-END PROCESS VENTS AND AGGREGATE BATCH VENT STREAMS

Control/recovery device	Parameters to be monitored	Established operating parameter(s)
Thermal incinerator	Firebox temperature	Minimum temperature.
Catalytic incinerator	Temperature upstream and downstream of the catalyst bed	Minimum upstream temperature; and minimum temperature difference across the catalyst bed.
Boiler or process heater	Firebox temperature	Minimum temperature.
Scrubber for halogenated vents	pH of scrubber effluent; and scrubber liquid and gas flow rates [§ 63.489(b)(4)(ii)]	Minimum pH; and minimum liquid/gas ratio.
Absorber	Exit temperature of the absorbing liquid; and exit specific gravity of the absorbing liquid.	Maximum temperature; and maximum specific gravity.
Condenser	Exit temperature	Maximum temperature.
Carbon adsorber	Total regeneration steam flow or nitrogen flow, or pressure (gauge or absolute)[a] during carbon bed regeneration cycle; and temperature of the carbon bed after regeneration (and within 15 minutes of completing any cooling cycle(s)).	Maximum flow or pressure; and maximum temperature.
Other devices (or as an alternate to the above)[b].	HAP concentration level or reading at outlet of device	Maximum HAP concentration or reading.

[a] 25 to 50 mm (absolute) is a common pressure level obtained by pressure swing absorbers.
[b] Concentration is measured instead of an operating parameter.

TABLE 8 TO SUBPART U OF PART 63—SUMMARY OF COMPLIANCE ALTERNATIVE REQUIREMENTS FOR THE BACK-END PROCESS PROVISIONS

Compliance alternative	Parameter to be monitored	Requirements
Compliance Using Stripping Technology, Demonstrated through Periodic Sampling [§ 63.495(b)].	Residual organic HAP content in each sample of crumb or latex.	(1) If a stripper operated in batch mode is used, at least one representative sample is to be taken from every batch. (2) If a stripper operated in continuous mode is used, at least one representative sample is to be taken each operating day.
	Quantity of Material (weight of latex or dry crumb rubber) represented by each sample.	(1) Acceptable methods of determining this quantity are production records, measurement of stream characteristics, and engineering calculations.
Compliance Using Stripping Technology, Demonstrated through Stripper Parameter Monitoring [§ 63.495(c)].	At a minimum, temperature, pressure, steaming rates (for steam strippers), and some parameter that is indicative of residence time.	(1) Establish stripper operating parameter levels for each grade in accordance with § 63.505(e). (2) Continuously monitor stripper operating parameters. (3) If hourly average parameters are outside of the established operating parameter levels, a crumb or latex sample shall be taken in accordance with § 63.495(c)(3)(ii).
Determining Compliance Using Control or Recovery Devices [§ 63.496].	Parameters to be monitored are described in Table 3 of subpart G of this part.	Comply with requirements listed in Table 3 of subpart G of this part, except for the requirements for halogenated vent stream scrubbers.

TABLE 9 TO SUBPART U OF PART 63—ROUTINE REPORTS REQUIRED BY THIS SUBPART

Reference	Description of report	Due date
§ 63.506(b) and Subpart A	Refer to § 63.506(b), Table 1 of this subpart, and to subpart A.	Refer to subpart A.
§ 63.506(e)(3)	Precompliance Report[a] New affected sources: with the application for approval of construction or reconstruction.	Existing affected sources: 12 months prior to compliance date.
§ 63.506(e)(4)	Emissions Averaging Plan	18 months prior to the compliance date.
§ 63.506(e)(4)(iv)	Updates to Emissions Averaging Plan.	120 days prior to making the change necessitating the update.
§ 63.506(e)(5)	Notification of Compliance Status[b]	Within 150 days after the compliance date.
§ 63.506(e)(6)	Periodic Reports	Semiannually, no later than 60 days after the end of each 6-month period. See § 63.506(e)(6)(i) for the due date for this report.
§ 63.506(e)(6)(xi)	Quarterly reports for Emissions Averaging.	No later than 60 days after the end of each quarter. First report is due with the Notification of Compliance Status.

TABLE 9 TO SUBPART U OF PART 63—ROUTINE REPORTS REQUIRED BY THIS SUBPART—Continued

Reference	Description of report	Due date
§ 63.506(e)(6)(xii)	Quarterly reports upon request of the Administrator.	No later than 60 days after the end of each quarter.
§ 63.506(e)(7)(i)	Storage Vessels Notification of Inspection.	At least 30 days prior to the refilling of each storage vessel or the inspection of each storage vessel.
§ 63.506(e)(7)(ii)	Requests for Approval of a Nominal Control Efficiency for Use in Emissions Averaging.	Initial submittal is due with the Emissions Averaging Plan; later submittals are made at the discretion of the owner or operator as specified in § 63.506(e)(7)(ii)(B).
§ 63.506(e)(7)(iii)	Notification of Change in the Primary Product.	For notification under § 63.480(f)(3)(ii) —notification submittal date at the discretion of the owner or operator.[c] For notification under § 63.480(f)(4)(ii) —within 6 months of making the determination.

[a] There may be two versions of this report due at different times; one for equipment subject to § 63.502 and one for other emission points subject to this subpart.
[b] There will be two versions of this report due at different times; one for equipment subject to § 63.502 and one for other emission points subject to this subpart.
[c] Note that the EPPU remains subject to this subpart until the notification under § 63.480(f)(3)(i) is made.

Subpart JJJ—National Emission Standards for Hazardous Air Pollutant Emissions: Group IV Polymers and Resins

29. Section 63.1310 is amended by:
a. Revising paragraph (a);
b. Revising paragraph (b);
c. Revising paragraph (c);
d. Revising paragraph (e);
e. Revising paragraph (f);
f. Revising paragraph (g) introductory text;
g. Revising paragraphs (g)(1) through (g)(4);
h. Revising paragraphs (g)(6) through (g)(8);
i. Revising paragraph (h);
j. Revising paragraph (i) introductory text;
k. Revising paragraph (i)(1) introductory text;
l. Revising paragraphs (i)(1)(i) and (i)(1)(ii);
m. Revising paragraph (i)(2)(i) introductory text;
n. Revising paragraph (i)(2)(i)(A);
o. Revising paragraphs (i)(2)(ii) and (i)(2)(iii);
p. Revising paragraphs (i)(3) through (i)(5);
q. Revising paragraph (j);
r. Adding paragraph (i)(2)(iv); and
s. Adding paragraph (i)(6).

The revisions and additions read as follows:

§ 63.1310 Applicability and designation of affected sources.

(a) *Definition of affected source.* The provisions of this subpart apply to each affected source. Affected sources are described in paragraphs (a)(1) through (a)(4) of this section.

(1) An affected source is either an existing affected source or a new affected source. Existing affected source is defined in paragraph (a)(2) of this section, and new affected source is defined in paragraph (a)(3) of this section.

(2) An existing affected source is defined as each group of one or more thermoplastic product process units (TPPU) and associated equipment, as listed in paragraph (a)(4) of this section that is not part of a new affected source, as defined in paragraph (a)(3) of this section, that is manufacturing the same primary product, and that is located at a plant site that is a major source.

(3) A new affected source is defined by the criteria in paragraph (a)(3)(i), (a)(3)(ii), or (a)(3)(iii) of this section. The situation described in paragraph (a)(3)(i) of this section is distinct from those situations described in paragraphs (a)(3)(ii) and (a)(3)(iii) of this section and from any situation described in paragraph (i) of this section.

(i) At a site without HAP emission points before March 29, 1995 (*i.e.*, a "greenfield" site), each group of one or more TPPU and associated equipment, as listed in paragraph (a)(4) of this section, that is manufacturing the same primary product and that is part of a major source on which construction commenced after March 29, 1995;

(ii) A group of one or more TPPU meeting the criteria in paragraph (i)(1)(i) of this section; or

(iii) A reconstructed affected source meeting the criteria in paragraph (i)(2)(i) of this section.

(4) *Emission points and equipment.* The affected source also includes the emission points and equipment specified in paragraphs (a)(4)(i) through (a)(4)(vi) of this section that are associated with each applicable group of one or more TPPU constituting an affected source.

(i) Each waste management unit.
(ii) Maintenance wastewater.
(iii) Each heat exchange system.
(iv) Each process contact cooling tower used in the manufacture of PET that is associated with a new affected source.
(v) Each process contact cooling tower used in the manufacture of PET using a continuous terephthalic acid high viscosity multiple end finisher process that is associated with an existing affected source.
(vi) Equipment required by, or utilized as a method of compliance with, this subpart which may include control devices and recovery devices.

(5) TPPUs and associated equipment, as listed in paragraph (a)(4) of this section, that are located at plant sites that are not major sources are neither affected sources nor part of an affected source.

(b) *TPPUs without organic HAP.* The owner or operator of a TPPU that is part of an affected source, as defined in paragraph (a) of this section, but that does not use or manufacture any organic HAP shall comply with the requirements of either paragraph (b)(1) or (b)(2) of this section. Such a TPPU is not subject to any other provisions of this subpart and is not required to comply with the provisions of subpart A of this part.

(1) Retain information, data, and analyses used to document the basis for the determination that the TPPU does not use or manufacture any organic HAP. Types of information that could document this determination include, but are not limited to, records of chemicals purchased for the process, analyses of process stream composition, engineering calculations, or process knowledge.

(2) When requested by the Administrator, demonstrate that the TPPU does not use or manufacture any organic HAP.

emission points in flexible operation units based on each product in accordance with paragraph (f)(6)(ii) of this section shall establish parameter monitoring levels, as required, in accordance with paragraph (f)(7)(i) of this section.

(i) Establish separate parameter monitoring levels in accordance with § 63.1334(a) for each individual product.

(ii) Establish a single parameter monitoring level (for each parameter required to be monitored at each device subject to monitoring requirements) in accordance with § 63.1334(a) that would apply for all products.

(8) *Reporting requirements.* When it is determined that a process unit is a TPPU and subject to the requirements of this subpart, the Notification of Compliance Status required by § 63.1335(e)(5) shall include the information specified in paragraphs (f)(8)(i) and (f)(8)(ii) of this section, as applicable. If it is determined that the process unit is not subject to this subpart, the owner or operator shall either retain all information, data, and analysis used to document the basis for the determination that the primary product is not a thermoplastic product, or, when requested by the Administrator, demonstrate that the process unit is not subject to this subpart.

(i) If the TPPU manufactures only one thermoplastic product, identification of that thermoplastic product.

(ii) If the TPPU is designed and operated as a flexible operation unit, the information specified in paragraphs (f)(8)(ii)(A) through (f)(8)(ii)(D) of this section, as appropriate, shall be submitted.

(A) If a primary product could be determined, identification of the primary product.

(B) Identification of which compliance option, either paragraph (f)(6)(i) or (f)(6)(ii) of this section, has been selected by the owner or operator.

(C) If the option to establish separate parameter monitoring levels for each product in paragraph (f)(7)(i) of this section is selected, the identification of each product and the corresponding parameter monitoring level.

(D) If the option to establish a single parameter monitor level in paragraph (f)(7)(ii) of this section is selected, the parameter monitoring level for each parameter.

(9) *TPPUs terminating production of all thermoplastic products.* If a TPPU terminates the production of all thermoplastic products and does not anticipate the production of any thermoplastic products in the future, the process unit is no longer a TPPU and is not subject to this subpart after notification is made to the Administrator. This notification shall be accompanied by a rationale for why it is anticipated that no thermoplastic products will be produced in the process unit in the future.

(10) *Redetermination of applicability to TPPUs that are flexible operation units.* Whenever changes in production occur that could reasonably be expected to change the primary product of a TPPU that is operating as a flexible operation unit from a thermoplastic product to a product that would make the process unit subject to another subpart of this part, the owner or operator shall re-evaluate the status of the process unit as a TPPU in accordance with paragraphs (f)(10)(i) through (iii) of this section.

(i) For each product produced in the flexible operation unit, the owner or operator shall calculate the percentage of total operating time in which the product was produced for the preceding five-year period, or since the date that the process unit began production of any product, whichever is shorter.

(ii) The owner or operator shall identify the primary product as the product with the highest percentage of total operating time for the period.

(iii) If the conditions in (f)(10)(iii)(A) through (C) of this section are met, the flexible operation unit shall no longer be designated as a TPPU and shall no longer be subject to the provisions of this subpart after the date that the process unit is required to be in compliance with the provisions of the other subpart of this part to which it is subject. If the conditions in paragraphs (f)(10)(iii)(A) through (C) of this section are not met, the flexible operation unit shall continue to be considered a TPPU and subject to the requirements of this subpart.

(A) The product identified in (f)(10)(ii) of this section is not a thermoplastic product; and

(B) The production of the product identified in (f)(10)(ii) of this section is subject to another subpart of this part; and

(C) The owner or operator submits a notification to the Administrator of the pending change in applicability.

(g) *Storage vessel ownership determination.* The owner or operator shall follow the procedures specified in paragraphs (g)(1) through (g)(7) of this section to determine to which process unit a storage vessel shall be assigned. Paragraph (g)(8) of this section specifies when an owner or operator is required to redetermine to which process unit a storage vessel is assigned.

(1) If a storage vessel is already subject to another subpart of 40 CFR part 63 on September 12, 1996, said storage vessel shall be assigned to the process unit subject to the other subpart.

(2) If a storage vessel is dedicated to a single process unit, the storage vessel shall be assigned to that process unit.

(3) If a storage vessel is shared among process units, then the storage vessel shall be assigned to that process unit located on the same plant site as the storage vessel that has the greatest input into or output from the storage vessel (*i.e.*, said process unit has the predominant use of the storage vessel).

(4) If predominant use cannot be determined for a storage vessel that is shared among process units and if only one of those process units is a TPPU subject to this subpart, the storage vessel shall be assigned to said TPPU.

* * * * *

(6) If the predominant use of a storage vessel varies from year to year, then predominant use shall be determined based on the utilization that occurred during the year preceding September 12, 1996 or based on the expected utilization for the 5 years following September 12, 1996 for existing affected sources, whichever is more representative of the expected operations for said storage vessel, and based on the expected utilization for the first 5 years after initial start-up for new affected sources. The determination of predominant use shall be reported in the Notification of Compliance Status, as required by § 63.1335(e)(5)(vi).

(7) Where a storage vessel is located at a major source that includes one or more process units which place material into, or receive materials from the storage vessel, but the storage vessel is located in a tank farm (including a marine tank farm), the applicability of this subpart shall be determined according to the provisions in paragraphs (g)(7)(i) through (g)(7)(iv) of this section.

(i) The storage vessel may only be assigned to a process unit that utilizes the storage vessel and does not have an intervening storage vessel for that product (or raw material, as appropriate). With respect to any process unit, an intervening storage vessel means a storage vessel connected by hard-piping both to the process unit and to the storage vessel in the tank farm so that product or raw material entering or leaving the process unit flows into (or from) the intervening storage vessel and does not flow directly into (or from) the storage vessel in the tank farm.

(ii) If there is no process unit at the major source that meets the criteria of

paragraph (g)(7)(i) of this section with respect to a storage vessel, this subpart does not apply to the storage vessel.

(iii) If there is only one process unit at the major source that meets the criteria of paragraph (g)(7)(i) of this section with respect to a storage vessel, the storage vessel shall be assigned to that process unit.

(iv) If there are two or more process units at the major source that meet the criteria of paragraph (g)(7)(i) of this section with respect to a storage vessel, the storage vessel shall be assigned to one of those process units according to the provisions of paragraphs (g)(3) through (g)(6) of this section. The predominant use shall be determined among only those process units that meet the criteria of paragraph (g)(7)(i) of this section.

(8) If the storage vessel begins receiving material from (or sending material to) a process unit that was not included in the initial determination, or ceases to receive material from (or send material to) a process unit, the owner or operator shall re-evaluate the applicability of this subpart to the storage vessel.

(h) *Recovery operations equipment ownership determination.* The owner or operator shall follow the procedures specified in paragraphs (h)(1) through (h)(6) of this section to determine to which process unit recovery operations equipment shall be assigned. Paragraph (h)(7) of this section specifies when an owner or operator is required to redetermine to which process unit the recovery operations equipment is assigned.

(1) If recovery operations equipment is already subject to another subpart of 40 CFR part 63 on September 12, 1996, said recovery operations equipment shall be assigned to the process unit subject to the other subpart.

(2) If recovery operations equipment is dedicated to a single process unit, the recovery operations equipment shall be assigned to that process unit.

(3) If recovery operations equipment is shared among process units, then the recovery operations equipment shall be assigned to that process unit located on the same plant site as the recovery operations equipment that has the greatest input into or output from the recovery operations equipment (*i.e.*, said process unit has the predominant use of the recovery operations equipment).

(4) If predominant use cannot be determined for recovery operations equipment that is shared among process units and if one of those process units is a TPPU subject to this subpart, the recovery operations equipment shall be assigned to said TPPU.

(5) If predominant use cannot be determined for recovery operations equipment that is shared among process units and if more than one of the process units are TPPUs that have different primary products and that are subject to this subpart, then the owner or operator shall assign the recovery operations equipment to any one of said TPPUs.

(6) If the predominant use of recovery operations equipment varies from year to year, then predominant use shall be determined based on the utilization that occurred during the year preceding September 12, 1996 or based on the expected utilization for the 5 years following September 12, 1996 for existing affected sources, whichever is the more representative of the expected operations for said recovery operations equipment, and based on the first 5 years after initial start-up for new affected sources. The determination of predominant use shall be reported in the Notification of Compliance Status, as required by § 63.1335(e)(5)(vii).

(7) If a piece of recovery operations equipment begins receiving material from a process unit that was not included in the initial determination, or ceases to receive material from a process unit that was included in the initial determination, the owner or operator shall reevaluate the applicability of this subpart to that recovery operations equipment.

(i) *Changes or additions to plant sites.* The provisions of paragraphs (i)(1) through (i)(4) of this section apply to owners or operators that change or add to their plant site or affected source. Paragraph (i)(5) of this section provides examples of what are and are not considered process changes for purposes of this paragraph (i) of this section. Paragraph (i)(6) of this section discusses reporting requirements.

(1) *Adding a TPPU to a plant site.* The provisions of paragraphs (i)(1)(i) and (i)(1)(ii) of this section apply to owners or operators that add one or more TPPUs to a plant site.

(i) If a group of one or more TPPUs that produce the same primary product is added to a plant site, the added group of one or more TPPUs and associated equipment, as listed in paragraph (a)(4) of this section, shall be a new affected source and shall comply with the requirements for a new affected source in this subpart upon initial start-up or by June 19, 2000, whichever is later, as provided in § 63.6(b), except that new affected sources whose primary product, as determined using the procedures specified in paragraph (f) of this section, is poly(ethylene terephthalate) (PET) shall be in compliance with § 63.1331 upon initial start-up or February 27, 2001, whichever is later, if the added group of one or more TPPUs meets the criteria in either paragraph (i)(1)(i)(A) or (i)(1)(i)(B) of this section, and the criteria in either paragraph (i)(1)(i)(C) or (i)(1)(i)(D) of this section are met.

(A) The construction of the group of one or more TPPUs commenced after March 29, 1995.

(B) The construction or reconstruction, for process units that have become TPPUs, commenced after March 29, 1995.

(C) The group of one or more TPPUs and associated equipment, as listed in paragraph (a)(4) of this section, has the potential to emit 10 tons per year or more of any HAP or 25 tons per year or more of any combination of HAP, and the primary product of the group of one or more TPPUs is currently produced at the plant site as the primary product of an affected source; or

(D) The primary product of the group of one or more TPPUs is not currently produced at the plant site as the primary product of an affected source and the plant site meets, or after the addition of the group of one or more TPPUs and associated equipment, as listed in paragraph (a)(4) of this section, will meet the definition of a major source.

(ii) If a group of one or more TPPUs that produce the same primary product is added to a plant site, and the group of one or more TPPUs does not meet the criteria specified in paragraph (i)(1)(i) of this section, and the plant site meets, or after the addition will meet, the definition of a major source, the group of one or more TPPUs and associated equipment, as listed in paragraph (a)(4) of this section, shall comply with the requirements for an existing affected source in this subpart upon initial start-up; by June 19, 2001; or by 6 months after notifying the Administrator that a process unit has been designated as a TPPU (in accordance with paragraph (f)(3)(iii) of this section), whichever is later.

(2) * * *

(i) If any components are replaced at an existing affected source such that the criteria specified in paragraphs (i)(2)(i)(A) through (i)(2)(i)(B) of this section are met, the entire affected source shall be a new affected source and shall comply with the requirements for a new affected source upon initial start-up or by June 19, 2000, whichever is later, as provided in § 63.6(b), except that new affected sources whose primary product is poly(ethylene terephthalate) (PET) shall be in compliance with § 63.1331 upon initial

start-up or by February 27, 2001, whichever is later.

(A) The replacement of components meets the definition of reconstruction in § 63.1312(b); and

* * * * *

(ii) If any components are replaced at an existing affected source such that the criteria specified in paragraphs (i)(2)(i)(A) through (i)(2)(i)(B) of this section are not met, and that replacement of components creates one or more Group 1 emission points (*i.e.*, either newly created Group 1 emission points or emission points that change group status from Group 2 to Group 1) or causes any other emission point to be added (*i.e.*, Group 2 emission points, equipment leak components subject to § 63.1331, continuous process vents subject to §§ 63.1316 through 63.1320, heat exchange systems subject to § 63.1328, and process contact cooling towers subject to § 63.1329), the resulting emission point(s) shall be subject to the applicable requirements for an existing affected source. The resulting emission points shall be in compliance by 120 days after the date of initial start-up or by the appropriate compliance date specified in § 63.1311 (*i.e.*, February 27, 1998 for most equipment leak components subject to § 63.1331, June 19, 2001 for most emission points other than equipment leaks, and February 27, 2001 for process contact cooling towers at sources that produce PET as the primary product), whichever is later.

(iii) If an addition or process change (not including a process change that solely replaces components) is made to an existing affected source that creates one or more Group 1 emission points (*i.e.*, either newly created Group 1 emission points or emission points that change group status from Group 2 to Group 1) or causes any other emission point to be added (*i.e.*, Group 2 emission points, equipment leak components subject to § 63.1331, continuous process vents subject to §§ 63.1316 through 63.1320, heat exchange systems subject to § 63.1328, and process contact cooling towers subject to § 63.1329), the resulting emission point(s) shall be subject to the applicable requirements for an existing affected source. The resulting emission point(s) shall be in compliance by 120 days after the date of initial start-up or by the appropriate compliance date specified in § 63.1311 (*i.e.*, February 27, 1998 for most equipment leak components subject to § 63.1331, June 19, 2001 for most emission points other than equipment leaks, and February 27, 2001 for process contact cooling towers at sources that produce PET as their primary product), whichever is later.

(iv) If any process change (not including a process change that solely replaces components) is made to an existing affected source that results in baseline emissions (*i.e.*, emissions prior to applying controls for purposes of complying with this subpart) from continuous process vents in the collection of material recovery sections within the affected source at an existing affected source producing PET using a continuous dimethyl terephthalate process changing from less than or equal to 0.12 kg organic HAP per Mg of product to greater than 0.12 kg organic HAP per Mg of product, the continuous process vents shall be subject to the applicable requirements for an existing affected source. The resulting emission point(s) shall be in compliance by 120 days after the date of initial start-up or by June 19, 2001, whichever is later.

(3) *Existing affected source requirements for surge control vessels and bottoms receivers that become subject to subpart H requirements.* If a process change or addition of an emission point causes a surge control vessel or bottoms receiver to become subject to § 63.170 under this paragraph (i), the owner or operator shall be in compliance upon initial start-up or by June 19, 2001, whichever is later.

(4) *Existing affected source requirements for compressors that become subject to the requirements of subpart H of this part.* If a process change or the addition of an emission point causes a compressor to become subject to § 63.164 under this paragraph (i), the owner or operator shall be in compliance upon initial start-up or by the compliance date for that compressor as specified in § 63.1311(d)(1) through (d)(4), whichever is later.

(5) *Determining what are and are not process changes.* For purposes of paragraph (i) of this section, examples of process changes include, but are not limited to, changes in feedstock type, or process catalyst type, or the replacement, removal, or addition of recovery equipment, or equipment changes that increase production capacity. For purposes of paragraph (i) of this section, process changes do not include: Process upsets, unintentional temporary process changes, and changes that do not alter the equipment configuration and operating conditions.

(6) *Reporting requirements for owners or operators that change or add to their plant site or affected source.* Owners or operators that change or add to their plant site or affected source, as discussed in paragraphs (i)(1) and (i)(2) of this section, shall submit a report as specified in § 63.1335(e)(7)(iv).

(j) *Applicability of this subpart during periods of start-up, shutdown, malfunction, or non-operation.* Paragraphs (j)(1) through (j)(4) of this section shall be followed during periods of start-up, shutdown, malfunction, or non-operation of the affected source or any part thereof.

(1) The emission limitations set forth in this subpart and the emission limitations referred to in this subpart shall apply at all times except during periods of non-operation of the affected source (or specific portion thereof) resulting in cessation of the emissions to which this subpart applies. The emission limitations of this subpart and the emission limitations referred to in this subpart shall not apply during periods of start-up, shutdown, or malfunction, except as provided in paragraphs (j)(3) and (j)(4) of this section. During periods of start-up, shutdown, or malfunction, the owner or operator shall follow the applicable provisions of the start-up, shutdown, and malfunction plan required by § 63.1335(b)(1). However, if a start-up, shutdown, malfunction, or period of non-operation of one portion of an affected source does not affect the ability of a particular emission point to comply with the emission limitations to which it is subject, then that emission point shall still be required to comply with the applicable emission limitations of this subpart during the start-up, shutdown, malfunction, or period of non-operation. For example, if there is an overpressure in the reactor area, a storage vessel that is part of the affected source would still be required to be controlled in accordance with the emission limitations in § 63.1314.

Similarly, the degassing of a storage vessel would not affect the ability of a batch process vent to meet the emission limitations of §§ 63.1321 through 63.1327.

(2) The emission limitations set forth in subpart H of this part, as referred to in § 63.1331, shall apply at all times except during periods of non-operation of the affected source (or specific portion thereof) in which the lines are drained and depressurized resulting in cessation of the emissions to which § 63.1331 applies, or during periods of start-up, shutdown, malfunction, or process unit shutdown (as defined in § 63.161).

(3) The owner or operator shall not shut down items of equipment that are required or utilized for compliance with this subpart during periods of start-up, shutdown, or malfunction during times when emissions (or, where applicable,

wastewater streams or residuals) are being routed to such items of equipment, if the shutdown would contravene requirements of this subpart applicable to such items of equipment. This paragraph (j)(3) does not apply if the item of equipment is malfunctioning. This paragraph also does not apply if the owner or operator shuts down the compliance equipment (other than monitoring systems) to avoid damage due to a contemporaneous start-up, shutdown, or malfunction of the affected source or portion thereof. If the owner or operator has reason to believe that monitoring equipment would be damaged due to a contemporaneous start-up, shutdown, or malfunction of the affected source or portion thereof, the owner or operator shall provide documentation supporting such a claim in the Precompliance Report or in a supplement to the Precompliance Report, as provided in § 63.1335(e)(3). Once approved by the Administrator in accordance with § 63.1335(e)(3)(viii), the provision for ceasing to collect, during a start-up, shutdown, or malfunction, monitoring data that would otherwise be required by the provisions of this subpart must be incorporated into the start-up, shutdown, malfunction plan for that affected source, as stated in § 63.1335(b)(1).

(4) During start-ups, shutdowns, and malfunctions when the emission limitations of this subpart do not apply pursuant to paragraphs (j)(1) through (j)(3) of this section, the owner or operator shall implement, to the extent reasonably available, measures to prevent or minimize excess emissions to the extent practical. For purposes of this paragraph, the term "excess emissions" means emissions greater than those allowed by the emissions limitation which would apply during operational periods other than start-up, shutdown, and malfunction. The measures to be taken shall be identified in the applicable start-up, shutdown, and malfunction plan, and may include, but are not limited to, air pollution control technologies, recovery technologies, work practices, pollution prevention, monitoring, and/or changes in the manner of operation of the affected source. Back-up control devices are not required, but may be used if available.

30. Section 63.1311 is amended by:

a. Revising the section title;

b. Revising paragraph (a);

c. Revising paragraph (b);

d. Revising paragraph (c);

e. Revising paragraph (d) introductory text;

f. Revising paragraph (d)(1) introductory text;

g. Revising paragraphs (d)(2) and (d)(3);

h. Revising paragraphs (d)(5) and (d)(6);

i. Revising paragraph (e) introductory text;

j. Revising paragraph (h);

k. Revising paragraph (i)(1);

l. Revising paragraph (j);

m. Revising paragraph (l);

n. Revising paragraph (m);

o. Adding paragraph (e)(3);

p. Adding paragraph (i)(3);

q. Adding paragraph (n); and

r. Adding paragraph (o).

The revisions and additions read as follows:

§ 63.1311 Compliance dates and relationship of this subpart to existing applicable rules.

(a) Affected sources are required to achieve compliance on or before the dates specified in paragraphs (b) through (d) of this section. Paragraph (e) of this section provides information on requesting compliance extensions. Paragraphs (f) through (n) of this section discuss the relationship of this subpart to subpart A of this part and to other applicable rules. Where an override of another authority of the Act is indicated in this subpart, only compliance with the provisions of this subpart is required. Paragraph (o) of this section specifies the meaning of time periods.

(b) New affected sources that commence construction or reconstruction after March 29, 1995 shall be in compliance with this subpart upon initial start-up or by June 19, 2000, whichever is later, except that new affected sources whose primary product, as determined using the procedures specified in § 63.1310(f), is poly(ethylene terephthalate) (PET) shall be in compliance with § 63.1331 upon initial start-up or February 27, 2001, whichever is later.

(c) Existing affected sources shall be in compliance with this subpart (except for § 63.1331 for which compliance is covered by paragraph (d) of this section) no later than June 19, 2001, as provided in § 63.6(c), unless an extension has been granted as specified in paragraph (e) of this section, except that the compliance date for the provisions contained in § 63.1329 is temporarily extended to February 27, 2001, for existing affected sources whose primary product, as determined using the procedures specified in 63.1310(f), is PET using a continuous terephthalic acid high viscosity multiple end finisher process.

(d) Except as provided for in paragraphs (d)(1) through (d)(6) of this section, existing affected sources shall be in compliance with § 63.1331 no later than June 19, 2001, unless an extension has been granted pursuant to paragraph (e) of this section.

(1) Compliance with the compressor provisions of § 63.164 shall occur no later than February 27, 1998, for any compressor meeting one or more of the criteria in paragraphs (d)(1)(i) through (d)(1)(iv) of this section, if the work can be accomplished without a process unit shutdown:

* * * * *

(2) Compliance with the compressor provisions of § 63.164 shall occur no later than March 12, 1998 for any compressor meeting all the criteria in paragraphs (d)(2)(i) through (d)(2)(iv) of this section:

(i) The compressor meets one or more of the criteria specified in paragraphs (d)(1)(i) through (d)(1)(iv) of this section;

(ii) The work can be accomplished without a process unit shutdown ;

(iii) The additional time is actually necessary due to the unavailability of parts beyond the control of the owner or operator; and

(iv) The owner or operator submits the request for a compliance extension to the appropriate Environmental Protection Agency (EPA) Regional Office at the address listed in § 63.13 no later than June 16, 1997. The request for a compliance extension shall contain the information specified in § 63.6(i)(6)(i)(A), (B), and (D). Unless the EPA Regional Office objects to the request for a compliance extension within 30 days after receipt of the request, the request shall be deemed approved.

(3) If compliance with the compressor provisions of § 63.164 cannot reasonably be achieved without a process unit shutdown, the owner or operator shall achieve compliance no later than September 12, 1998. The owner or operator who elects to use this provision shall submit a request for a compliance extension in accordance with the requirements of paragraph (d)(2)(iv) of this section.

* * * * *

(5) Compliance with the provisions of § 63.170 shall occur no later than June 19, 2001.

(6) Notwithstanding paragraphs (d)(1) through (d)(4) of this section, existing affected sources whose primary product, as determined using the procedures specified in § 63.1310(f), is PET shall be in compliance with § 63.1331 no later than February 27, 2001.

(e) Pursuant to Section 112(i)(3)(B) of the Act, an owner or operator may request an extension allowing the

existing affected source up to 1 additional year to comply with Section 112(d) standards. For purposes of this subpart, a request for an extension shall be submitted to the permitting authority as part of the operating permit application or to the Administrator as a separate submittal or as part of the Precompliance Report. Requests for extensions shall be submitted no later than 120 days prior to the compliance dates specified in paragraphs (b) through (d) of this section, or as specified elsewhere in this subpart, except as provided in paragraph (e)(3) of this section. The dates specified in § 63.6(i) for submittal of requests for extensions shall not apply to this subpart.

* * * * *

(3) An owner or operator may submit a compliance extension request after the date specified in paragraph (e) of this section, provided that the need for the compliance extension arose after that date, and the need arose due to circumstances beyond reasonable control of the owner or operator. This request shall include, in addition to the information specified in paragraph (e)(1) of this section, a statement of the reasons additional time is needed and the date when the owner or operator first learned of the circumstances necessitating a request for compliance extension under this paragraph (e)(3).

* * * * *

(h) After the compliance dates specified in this section, a storage vessel that is assigned to an affected source subject to this subpart and that is also subject to the provisions of 40 CFR part 60, subpart Kb, is required to comply only with the provisions of this subpart. After the compliance dates specified in this section, said storage vessel shall no longer be subject to 40 CFR part 60, subpart Kb.

(i)(1) Except as provided in paragraphs (i)(2) and (i)(3) of this section, after the compliance dates specified in this section, affected sources producing PET using a continuous terephthalic acid process, producing PET using a continuous dimethyl terephthalate process, or producing polystyrene resin using a continuous process subject to this subpart that are also subject to the provisions of 40 CFR part 60, subpart DDD, are required to comply only with the provisions of this subpart. After the compliance dates specified in this section, said sources shall no longer be subject to 40 CFR part 60, subpart DDD.

* * * * *

(3) Existing affected sources producing PET using a continuous terephthalic acid process, but not using a continuous terephthalic acid high viscosity multiple end finisher process, that are subject to and complying with 40 CFR 60.562–1(c)(2)(ii)(B) shall continue to comply with said section. Existing affected sources producing PET using a continuous dimethyl terephthalic process that are subject to and complying with 40 CFR 60.562–1(c)(1)(ii)(B) shall continue to comply with said section.

(j) Owners or operators of affected sources subject to this subpart that are also subject to the provisions of subpart Q of this part shall comply with both subparts.

* * * * *

(l) After the compliance dates specified in this section, a distillation operation that is assigned to an affected source subject to this subpart that is also subject to the provisions of 40 CFR part 60, subpart NNN, is required to comply only with the provisions of this subpart. After the compliance dates specified in this section, the distillation operation shall no longer be subject to 40 CFR part 60, subpart NNN.

(m) *Applicability of other regulations for monitoring, recordkeeping or reporting with respect to combustion devices, recovery devices, or recapture devices.* After the compliance dates specified in this subpart, if any combustion device, recovery device or recapture device subject to this subpart is also subject to monitoring, recordkeeping, and reporting requirements in 40 CFR part 264 subpart AA or CC, or is subject to monitoring and recordkeeping requirements in 40 CFR part 265 subpart AA or CC and the owner or operator complies with the periodic reporting requirements under 40 CFR part 264 subpart AA or CC that would apply to the device if the facility had final-permitted status, the owner or operator may elect to comply either with the monitoring, recordkeeping and reporting requirements of this subpart, or with the monitoring, recordkeeping and reporting requirements in 40 CFR parts 264 and/or 265, as described in this paragraph, which shall constitute compliance with the monitoring, recordkeeping and reporting requirements of this subpart. The owner or operator shall identify which option has been selected in the Notification of Compliance Status required by § 63.1335(e)(5).

(n) *Applicability of other requirements for heat exchange systems or waste management units.* Paragraphs (n)(1) and (n)(2) of this section address instances in which certain requirements from other regulations also apply for the same heat exchange system(s) or waste management unit(s) that are subject to this subpart.

(1) After the applicable compliance date specified in this subpart, if a heat exchange system subject to this subpart is also subject to a standard identified in paragraphs (n)(1)(i) or (ii) of this section, compliance with the applicable provisions of the standard identified in paragraphs (n)(1)(i) or (ii) of this section shall constitute compliance with the applicable provisions of this subpart with respect to that heat exchange system.

(i) Subpart F of this part.

(ii) A subpart of this part which requires compliance with § 63.104 (*e.g.*, subpart U of this part).

(2) After the applicable compliance date specified in this subpart, if any waste management unit subject to this subpart is also subject to a standard identified in paragraph (n)(2)(i) or (ii) of this section, compliance with the applicable provisions of the standard identified in paragraph (n)(2)(i) or (ii) of this section shall constitute compliance with the applicable provisions of this subpart with respect to that waste management unit.

(i) Subpart G of this part.

(ii) A subpart of this part which requires compliance with §§ 63.132 through 63.147.

(o) All terms in this subpart that define a period of time for completion of required tasks (*e.g.*, weekly, monthly, quarterly, annual), unless specified otherwise in the section or paragraph that imposes the requirement, refer to the standard calendar periods.

(1) Notwithstanding time periods specified in this subpart for completion of required tasks, such time periods may be changed by mutual agreement between the owner or operator and the Administrator, as specified in subpart A of this part (*e.g.*, a period could begin on the compliance date or another date, rather than on the first day of the standard calendar period). For each time period that is changed by agreement, the revised period shall remain in effect until it is changed. A new request is not necessary for each recurring period.

(2) Where the period specified for compliance is a standard calendar period, if the initial compliance date occurs after the beginning of the period, compliance shall be required according to the schedule specified in paragraphs (o)(2)(i) or (o)(2)(ii) of this section, as appropriate.

(i) Compliance shall be required before the end of the standard calendar period within which the compliance deadline occurs, if there remain at least 3 days for tasks that must be performed

weekly, at least 2 weeks for tasks that must be performed monthly, at least 1 month for tasks that must be performed each quarter, or at least 3 months for tasks that must be performed annually; or

(ii) In all other cases, compliance shall be required before the end of the first full standard calendar period after the period within which the initial compliance deadline occurs.

(3) In all instances where a provision of this subpart requires completion of a task during each of multiple successive periods, an owner or operator may perform the required task at any time during the specified period, provided that the task is conducted at a reasonable interval after completion of the task during the previous period.

31. Section 63.1312 is amended by:

a. Revising paragraph (a);

b. Amending paragraph (b) by revising the definitions for "Acrylonitrile butadiene styrene latex resin (ABS latex)," "Aggregate batch vent stream," "Batch cycle," "Batch process," "Batch process vent," "Batch unit operation," "Continuous process," "Continuous process vent," "Continuous unit operation," "Control device," "Emission point," "Emulsion process," "Group 1 batch process vent," "Heat exchange system," "Maintenance wastewater," "Mass process," "Material recovery section," "Organic hazardous air pollutant(s) (organic HAP)," "Polymerization reaction section," "Process unit," "Process vent," "Product," "Raw materials preparation section," "Recovery operations equipment," "Steady-state conditions," "Storage vessel," "Supplemental combustion air," "Suspension process," and "Thermoplastic product process unit (TPPU),";

c. Amending paragraph (b) by removing the definitions of "Average flow rate," "Solid state polymerization unit," and "Year,"; and

d. Amending paragraph (b) by adding definitions for the terms "Annual average batch vent concentration," "Annual average batch vent flow rate," "Annual average concentration," "Annual average flow rate," "Average batch vent concentration," "Average batch vent flow rate," "Batch mass input limitation," "Batch mode," "Combined vent stream," "Construction," "Continuous mode," "Continuous record," "Continuous recorder," "Equipment," "Existing affected source," "Existing process unit," "Flexible operation unit," "Group 1 wastewater stream" "Group 2 wastewater stream," "Highest- HAP recipe," "Initial start-up," "Maximum true vapor pressure," "Multicomponent system," "New affected source," "New process unit," "On-site or On site," "Operating day," "Recipe," "Reconstruction," "Recovery device," "Residual," "Shutdown," "Solid state polymerization process," "Start-up," "Total resource effectiveness index value or TRE index value," "Vent stream," "Waste management unit," "Wastewater," and "Wastewater stream."

The revisions and additions read as follows:

§ 63.1312 Definitions.

(a) The following terms used in this subpart shall have the meaning given them in § 63.2, § 63.101, § 63.111, § 63.161, or the Act, as specified after each term:

Act (§ 63.2)
Administrator (§ 63.2)
Automated monitoring and recording system (§ 63.111)
Boiler (§ 63.111)
Bottoms receiver (§ 63.161)
By compound (§ 63.111)
By-product (§ 63.101)
Car-seal (§ 63.111)
Closed-vent system (§ 63.111)
Combustion device (§ 63.111)
Commenced (§ 63.2)
Compliance date (§ 63.2)
Connector (§ 63.161)
Continuous monitoring system (§ 63.2)
Distillation unit (§ 63.111)
Duct work (§ 63.161)
Emission limitation (Section 302(k) of the Act)
Emission standard (§ 63.2)
Emissions averaging (§ 63.2)
EPA (§ 63.2)
Equipment leak (§ 63.101)
External floating roof (§ 63.111)
Fill or filling (§ 63.111)
First attempt at repair (§ 63.161)
Fixed capital cost (§ 63.2)
Flame zone (§ 63.111)
Floating roof (§ 63.111)
Flow indicator (§ 63.111)
Fuel gas system (§ 63.101)
Halogens and hydrogen halides (§ 63.111)
Hard-piping (§ 63.111)
Hazardous air pollutant (§ 63.2)
Impurity (§ 63.101)
In organic hazardous air pollutant service or in organic HAP service (§ 63.161)
Incinerator (§ 63.111)
Instrumentation system (§ 63.161)
Internal floating roof (§ 63.111)
Lesser quantity (§ 63.2)
Major source (§ 63.2)
Malfunction (§ 63.2)
Oil-water separator or organic-water separator (§ 63.111)
Open-ended valve or line (§ 63.161)
Operating permit (§ 63.101)
Organic monitoring device (§ 63.111)
Owner or operator (§ 63.2)
Performance evaluation (§ 63.2)
Performance test (§ 63.2)
Permitting authority (§ 63.2)
Plant site (§ 63.101)
Potential to emit (§ 63.2)
Pressure release (§ 63.161)
Primary fuel (§ 63.111)
Process heater (§ 63.111)
Process unit shutdown (§ 63.161)
Process wastewater (§ 63.101)
Process wastewater stream (§ 63.111)
Reactor (§ 63.111)
Recapture device (§ 63.101)
Repaired (§ 63.161)
Research and development facility (§ 63.101)
Routed to a process or route to a process (§ 63.161)
Run (§ 63.2)
Secondary fuel (§ 63.111)
Sensor (§ 63.161)
Specific gravity monitoring device (§ 63.111)
Start-up, shutdown, and malfunction plan (§ 63.101)
State (§ 63.2)
Stationary Source (§ 63.2)
Surge control vessel (§ 63.161)
Temperature monitoring device (§ 63.111)
Test method (§ 63.2)
Treatment process (§ 63.111)
Unit operation (§ 63.101)
Visible emission (§ 63.2)

(b) * * *

Acrylonitrile butadiene styrene latex resin (ABS latex) means ABS produced through an emulsion process; however, the product is not coagulated or dried as typically occurs in an emulsion process.

* * * * *

Aggregate batch vent stream means a gaseous emission stream containing only the exhausts from two or more batch process vents that are ducted, hardpiped, or otherwise connected together for a continuous flow .

* * * * *

Annual average batch vent concentration is determined using Equation 1, as described in § 63.1323(h)(2) for halogenated compounds.

Annual average batch vent flow rate is determined by the procedures in § 63.1323(e)(3).

Annual average concentration, as used in the wastewater provisions, means the flow-weighted annual average concentration, as determined according to the procedures specified in § 63.144(b), with the exceptions noted in § 63.1330, for the purposes of this subpart.

Annual average flow rate, as used in the wastewater provisions, means the

annual average flow rate, as determined according to the procedures specified in § 63.144(c), with the exceptions noted in § 63.1330, for the purposes of this subpart.

Average batch vent concentration is determined by the procedures in § 63.1323(b)(5)(iii) for HAP concentrations and is determined by the procedures in § 63.1323(h)(1)(iii) for organic compounds containing halogens and hydrogen halides.

Average batch vent flow rate is determined by the procedures in § 63.1323(e)(1) and (e)(2).

* * * * *

Batch cycle means the operational step or steps, from start to finish, that occur as part of a batch unit operation.

* * * * *

Batch mass input limitation means an enforceable restriction on the total mass of HAP or material that can be input to a batch unit operation in one year.

Batch mode means the discontinuous bulk movement of material through a unit operation. Mass, temperature, concentration, and other properties may vary with time. For a unit operation operated in a batch mode (*i.e.*, batch unit operation), the addition of material and withdrawal of material do not typically occur simultaneously.

Batch process means, for the purposes of this subpart, a process where the reactor(s) is operated in a batch mode.

Batch process vent means a process vent with annual organic HAP emissions greater than 225 kilograms per year from a batch unit operation within an affected source. Annual organic HAP emissions are determined as specified in § 63.1323(b) at the location specified in § 63.1323(a)(2).

Batch unit operation means a unit operation operated in a batch mode.

Combined vent stream, as used in reference to batch process vents, continuous process vents, and aggregate batch vent streams, means the emissions from a combination of two or more of the aforementioned types of process vents. The primary occurrence of a combined vent stream is the combined emissions from a continuous process vent and a batch process vent.

* * * * *

Construction means the on-site fabrication, erection, or installation of an affected source. Construction also means the on-site fabrication, erection, or installation of a process unit or combination of process units which subsequently becomes an affected source or part of an affected source, due to a change in primary product.

Continuous mode means the continuous movement of material through a unit operation. Mass, temperature, concentration, and other properties typically approach steady-state conditions. For a unit operation operated in a continuous mode (*i.e.*, continuous unit operation), the simultaneous addition of raw material and withdrawal of product is typical.

Continuous process means, for the purposes of this subpart, a process where the reactor(s) is operated in a continuous mode.

Continuous process vent means a process vent containing greater than 0.005 weight percent total organic HAP from a continuous unit operation within an affected source. The total organic HAP weight percent is determined after the last recovery device, as described in § 63.115(a), and is determined as specified in § 63.115(c).

Continuous record means documentation, either in hard copy or computer readable form, of data values measured at least once every 15 minutes and recorded at the frequency specified in § 63.1335(d) or § 63.1335(h).

Continuous recorder means a data recording device that either records an instantaneous data value at least once every 15 minutes or records 1-hour or more frequent block average values.

Continuous unit operation means a unit operation operated in a continuous mode.

Control device is defined in § 63.111, except that the term "continuous process vents subject to § 63.1315" shall apply instead of the term "process vents," for the purpose of this subpart.

* * * * *

Emission point means an individual continuous process vent, batch process vent, storage vessel, waste management unit, equipment leak, heat exchange system, or process contact cooling tower, or equipment subject to § 63.149.

Emulsion process means a process where the monomer(s) is dispersed in droplets throughout the water phase with the aid of an emulsifying agent such as soap or a synthetic emulsifier. The polymerization occurs either within the emulsion droplet or in the aqueous phase.

Equipment means, for the purposes of the provisions in § 63.1331 and the requirements in subpart H that are referred to in § 63.1331, each pump, compressor, agitator, pressure relief device, sampling connection system, open-ended valve or line, valve, connector, surge control vessel, bottoms receiver, and instrumentation system in organic hazardous air pollutant service; and any control devices or systems required by subpart H of this part.

Existing affected source is defined in § 63.1310(a)(3).

Existing process unit means any process unit that is not a new process unit.

* * * * *

Flexible operation unit means a process unit that manufactures different chemical products, polymers, or resins periodically by alternating raw materials or operating conditions. These units are also referred to as campaign plants or blocked operations.

Group 1 batch process vent means a batch process vent releasing annual organic HAP emissions greater than the level specified in § 63.1323(d) and with a cutoff flow rate, calculated in accordance with § 63.1323(f), greater than or equal to the annual average batch vent flow rate. Annual organic HAP emissions and annual average batch vent flow rate are determined at the exit of the batch unit operation, as described in § 63.1323(a)(2). Annual organic HAP emissions are determined as specified in § 63.1323(b), and annual average batch vent flow rate is determined as specified in § 63.1323(e).

* * * * *

Group 1 wastewater stream means a wastewater stream consisting of process wastewater from an existing or new affected source that meets the criteria for Group 1 status in § 63.132(c) and/or that meets the criteria for Group 1 status in § 63.132(d), with the exceptions listed in § 63.1330(b)(8) for the purposes of this subpart (*i.e.*, for organic HAP listed on Table 6 of this subpart only).

Group 2 wastewater stream means any process wastewater stream that does not meet the definition of a Group 1 wastewater stream.

* * * * *

Heat exchange system means any cooling tower system or once-through cooling water system (*e.g.*, river or pond water) designed and intended to operate to not allow contact between the cooling medium and process fluid or gases (*i.e.*, a noncontact system). A heat exchange system can include more than one heat exchanger and can include recirculating or once-through cooling systems.

Highest-HAP recipe for a product means the recipe of the product with the highest total mass of HAP charged to the reactor during the production of a single batch of product.

Initial start-up means the first time a new or reconstructed affected source begins production of a thermoplastic product, or, for equipment added or changed as described in § 63.1310(i), the first time the equipment is put into operation to produce a thermoplastic product. Initial start-up does not include operation solely for testing equipment. Initial start-up does not

include subsequent start-ups of an affected source or portion thereof following malfunctions or shutdowns or following changes in product for flexible operation units or following recharging of equipment in batch operation. Further, for purposes of § 63.1311 and § 63.1331, initial start-up does not include subsequent start-ups of affected sources or portions thereof following malfunctions or process unit shutdowns.

Maintenance wastewater is defined in § 63.101, except that the term "thermoplastic product process unit" shall apply wherever the term "chemical manufacturing process unit" is used. Further, the generation of wastewater from the routine rinsing or washing of equipment in batch operation between batches is not maintenance wastewater, but is considered to be process wastewater, for the purposes of this subpart.

Mass process means a polymerization process carried out through the use of thermal energy. Mass processes do not utilize emulsifying or suspending agents, but may utilize catalysts or other additives.

Material recovery section means, for PET plants, the equipment that recovers by-product methanol from any process section for use, reuse, or sale, or the equipment that separates materials containing by-product methanol from any process section for off-site purification or treatment with the intent to recover methanol for reuse. For polystyrene plants, material recovery section means the equipment that recovers unreacted styrene from any process section for use, reuse, or sale, or the equipment that separates materials containing unreacted styrene from any process section for off-site purification or treatment with the intent to recover styrene for reuse. Equipment used to store recovered materials (*i.e.*, ethylene glycol, methanol, or styrene) is not included. Equipment designed to recover or separate materials from the polymer product is to be included in this process section, provided that at the time of initial compliance some of the unreacted or by-product material is recovered for return to the TPPU, or sale, or provided that some of the separated material is sent for off-site purification or treatment with the intent to recover the unreacted or by-product material for reuse. Otherwise, such equipment is to be assigned to one of the other process sections, as appropriate. If equipment is used to recover unreacted or by-product material and return it directly to the same piece of process equipment from which it was emitted, then that recovery equipment is considered part of the process section that contains the process equipment. On the other hand, if equipment is used to recover unreacted or by-product material and return it to a different piece of process equipment in the same process section, that recovery equipment is considered part of a material recovery section. Equipment used for the on-site recovery of ethylene glycol from PET plants, however, is not included in the material recovery section; such equipment is to be included in the polymerization reaction section. Equipment used for the on-site recovery of both ethylene glycol and any other materials from PET plants is not included in the material recovery section; this equipment is to be included in the polymerization reaction section. Such equipment includes both contact and non-contact condensers removing ethylene glycol from vapor streams coming out of polymerization vessels.

Maximum true vapor pressure is defined in § 63.111, except that the terms "transfer" or "transferred" shall not apply for purposes of this subpart.

* * * * *

Multicomponent system means, as used in conjunction with batch process vents, a stream whose liquid and/or vapor contains more than one compound.

New process unit means a process unit for which the construction or reconstruction commenced after March 29, 1995.

* * * * *

On-site or *On site* means, with respect to records required to be maintained by this subpart or required by another subpart referenced by this subpart, that records are stored at a location within a major source which encompasses the affected source. On-site includes, but is not limited to, storage at the affected source or TPPU to which the records pertain, or storage in central files elsewhere at the major source.

Operating day means the period defined by the owner or operator in the Notification of Compliance Status required by § 63.1335(e)(5). The operating day is the period for which daily average monitoring values and batch cycle daily average monitoring values are determined.

Organic hazardous air pollutant(s) (organic HAP) means one or more of the chemicals listed in Table 6 of this subpart or any other chemical which is:

(1) Knowingly produced or introduced into the manufacturing process other than as an impurity; and

(2) Listed in Table 2 of subpart F of this part.

* * * * *

Polymerization reaction section means the equipment designed to cause monomer(s) to react to form polymers, including equipment designed primarily to cause the formation of short polymer chains (*e.g.*, oligomers or low molecular weight polymers), but not including equipment designed to prepare raw materials for polymerization (*e.g.*, esterification vessels). For the purposes of these standards, the polymerization reaction section begins with the equipment used to transfer the materials from the raw materials preparation section and ends with the last vessel in which polymerization occurs. Equipment used for the on-site recovery of ethylene glycol from PET plants is included in this process section, rather than in the material recovery process section.

* * * * *

Process unit means a collection of equipment assembled and connected by hardpiping or duct work, used to process raw materials and to manufacture a product.

Process vent means a gaseous emission stream from a unit operation that is discharged to the atmosphere either directly or after passing through one or more control, recovery, or recapture devices. Unit operations that may have process vents are condensers, distillation units, reactors, or other unit operations within the TPPU. Process vents exclude pressure releases, gaseous streams routed to a fuel gas system(s), and leaks from equipment regulated under § 63.1331. A gaseous emission stream is no longer considered to be a process vent after the stream has been controlled and monitored in accordance with the applicable provisions of this subpart.

Product means a polymer produced using the same monomers and varying in additives (*e.g.*, initiators, terminators, etc.); catalysts; or in the relative proportions of monomers, that is manufactured by a process unit. With respect to polymers, more than one recipe may be used to produce the same product. As an example, styrene acrylonitrile resin and methyl methacrylate butadiene styrene resin each represent a different product. Product also means a chemical that is not a polymer, that is manufactured by a process unit. By-products, isolated intermediates, impurities, wastes, and trace contaminants are not considered products.

Raw materials preparation section means the equipment at a polymer

manufacturing plant designed to prepare raw materials, such as monomers and solvents, for polymerization. For the purposes of the standards in this subpart, this process section includes the equipment used to transfer raw materials from storage and/or the equipment used to transfer recovered material from the material recovery process sections to the raw material preparation section, and ends with the last piece of equipment that prepares the material for polymerization. The raw materials preparation section may include equipment that is used to purify, dry, or otherwise treat raw materials or raw and recovered materials together; to activate catalysts; or to promote esterification including the formation of some short polymer chains (oligomers). The raw materials preparation section does not include equipment that is designed primarily to accomplish the formation of oligomers, the treatment of recovered materials alone, or the storage of raw or recovered materials.

Recipe means a specific composition, from among the range of possible compositions that may occur within a product, as defined in this section. A recipe is determined by the proportions of monomers and, if present, other reactants and additives that are used to make the recipe. For example, acrylonitrile butadiene styrene latex resin (ABS latex) without additives; ABS latex with an additive; and ABS latex with different proportions of acrylonitrile to butadiene are all different recipes of the same product, ABS latex.

Reconstruction means the addition of new components or the replacement of existing components at an affected source or at a previously unaffected stationary source that becomes an affected source as a result of the change, to such an extent that:

(1) The fixed capital cost of the new components exceeds 50 percent of the fixed capital cost that would be required to construct a comparable affected new source; and

(2) It is technologically and economically feasible for the reconstructed source to meet the provisions of this subpart.

Recovery device means:

(1) An individual unit of equipment capable of and normally used for the purpose of recovering chemicals for:

(i) Use;

(ii) Reuse;

(iii) Fuel value (*i.e.*, net heating value); or

(iv) For sale for use, reuse, or fuel value (*i.e.*, net heating value).

(2) Examples of equipment that may be recovery devices include absorbers, carbon adsorbers, condensers, oil-water separators or organic-water separators, or organic removal devices such as decanters, strippers, or thin-film evaporation units. For the purposes of the monitoring, recordkeeping, or reporting requirements of this subpart, recapture devices are considered recovery devices.

Recovery operations equipment means the equipment used to separate the components of process streams. Recovery operations equipment includes distillation units, condensers, etc. Equipment used for wastewater treatment and recovery or recapture devices used as control devices shall not be considered recovery operations equipment.

Residual is defined in § 63.111, except that when the definition in § 63.111 uses the term "Table 9 compounds," the term "organic HAP listed in Table 6 of subpart JJJ" shall apply for purposes of this subpart.

Shutdown means for purposes including, but not limited to, periodic maintenance, replacement of equipment, or repair, the cessation of operation of an affected source, a TPPU(s) within an affected source, a waste management unit or unit operation within an affected source, or equipment required or used to comply with this subpart, or the emptying or degassing of a storage vessel. For purposes of the wastewater provisions of § 63.1330, shutdown does not include the routine rinsing or washing of equipment in batch operation between batches. For purposes of the batch process vent provisions in §§ 63.1321 through 63.1327, the cessation of equipment in batch operation is not a shutdown, unless the equipment undergoes maintenance, is replaced, or is repaired.

Solid state polymerization process means a unit operation which, through the application of heat, furthers the polymerization (*i.e.*, increases the intrinsic viscosity) of polymer chips.

Start-up means the setting into operation of an affected source, a TPPU(s) within an affected source, a waste management unit or unit operation within an affected source, or equipment required or used to comply with this subpart, or a storage vessel after emptying and degassing. For both continuous and batch processes, start-up includes initial start-up and operation solely for testing equipment. For both continuous and batch processes, start-up does not include the recharging of equipment in batch operation. For continuous processes, start-up includes transitional conditions due to changes in product for flexible operation units. For batch processes, start-up does not include transitional conditions due to changes in product for flexible operation units.

Steady-state conditions means that all variables (temperatures, pressures, volumes, flow rates, *etc.*) in a process do not vary significantly with time; minor fluctuations about constant mean values may occur.

Storage vessel means a tank or other vessel that is used to store liquids that contain one or more organic HAP. Storage vessels do not include:

(1) Vessels permanently attached to motor vehicles such as trucks, railcars, barges, or ships;

(2) Pressure vessels designed to operate in excess of 204.9 kilopascals and without emissions to the atmosphere;

(3) Vessels with capacities smaller than 38 cubic meters;

(4) Vessels and equipment storing and/or handling material that contains no organic HAP and/or organic HAP as impurities only;

(5) Wastewater storage tanks; and

(6) Surge control vessels and bottoms receivers.

* * * * *

Supplemental combustion air means the air that is added to a vent stream after the vent stream leaves the unit operation. Air that is part of the vent stream as a result of the nature of the unit operation is not considered supplemental combustion air. Air required to operate combustion device burner(s) is not considered supplemental combustion air. Air required to ensure the proper operation of catalytic oxidizers, to include the intermittent addition of air upstream of the catalyst bed to maintain a minimum threshold flow rate through the catalyst bed or to avoid excessive temperatures in the catalyst bed, is not considered to be supplemental combustion air.

Suspension process means a polymerization process where the monomer(s) is in a state of suspension, with the help of suspending agents, in a medium other than water (typically an organic solvent). The resulting polymers are not soluble in the reactor medium.

* * * * *

Thermoplastic product process unit (TPPU) means a collection of equipment assembled and connected by hard-piping or ductwork, used to process raw materials and to manufacture a thermoplastic product as its primary product. This collection of equipment includes unit operations; recovery

operations equipment, process vents; equipment identified in § 63.149; storage vessels, as determined in § 63.1310(g); and the equipment that is subject to the equipment leak provisions as specified in § 63.1331. Utilities, lines and equipment not containing process fluids, and other non-process lines, such as heating and cooling systems which do not combine their materials with those in the processes they serve, are not part of the thermoplastic product process unit. A thermoplastic product process unit consists of more than one unit operation.

* * * * *

Total resource effectiveness index value or TRE index value means a measure of the supplemental total resource requirement per unit reduction organic HAP associated with a continuous process vent stream, based on vent stream flow rate, emission rate of organic HAP, net heating value, and corrosion properties (whether or not the continuous process vent stream contains halogenated compounds), as quantified by the equations given under § 63.115.

Vent stream, as used in reference to batch process vents, continuous process vents, and aggregate batch vent streams, means the emissions from one or more process vents.

Waste management unit is defined in § 63.111, except that where the definition in § 63.111 uses the term "chemical manufacturing process unit," the term "TPPU" shall apply for purposes of this subpart.

Wastewater means water that:

(1) Contains either:

(i) An annual average concentration of organic HAP listed on Table 6 of this subpart, except for ethylene glycol, of at least 5 parts per million by weight and has an annual average flow rate of 0.02 liter per minute or greater; or

(ii) An annual average concentration of organic HAP listed on Table 6 of this subpart, except for ethylene glycol, of at least 10,000 parts per million by weight at any flow rate; and

(2) Is discarded from a TPPU that is part of an affected source. Wastewater is process wastewater or maintenance wastewater.

Wastewater stream means a stream that contains wastewater as defined in this section.

32. Section 63.1313 is amended by:

a. Revising paragraph (a) introductory text;

b. Revising paragraph (a)(2);

c. Revising paragraph (b);

d. Revising paragraph (c); and

e. Adding paragraph (d).

The revisions and additions read as follows:

§ 63.1313 Emission standards.

(a) Except as allowed under paragraphs (b) through (d) of this section, the owner or operator of an existing or new affected source shall comply with the provisions in:

* * * * *

(2) Section 63.1315, or §§ 63.1316 through 63.1320, as appropriate, for continuous process vents;

* * * * *

(b) When emissions of different kinds (*i.e.*, emissions from continuous process vents subject to either § 63.1315 or §§ 63.1316 through 63.1320, batch process vents, aggregate batch vent streams, storage vessels, process wastewater, and/or in-process equipment subject to § 63.149) are combined, and at least one of the emission streams would be classified as Group 1 in the absence of combination with other emission streams, the owner or operator shall comply with the requirements of either paragraph (b)(1) or (b)(2) of this section, as appropriate. For purposes of this paragraph (b), combined emission streams containing one or more batch process vents and containing one or more continuous process vents subject to § 63.1315, § 63.1316(b)(1)(i)(A), § 63.1316(b)(1)(ii), § 63.1316(b)(2)(i), § 63.1316(b)(2)(ii), or § 63.1316(c)(1), excluding § 63.1316(c)(1)(ii), may comply with either paragraph (b)(1) or (b)(2) of this section, as appropriate. For purposes of this paragraph (b), the owner or operator of an affected source with combined emission streams containing one or more batch process vents but not containing one or more continuous process vents subject to § 63.1315, § 63.1316(b)(1)(i)(A), § 63.1316(b)(1)(ii), § 63.1316(b)(2)(i), § 63.1316(b)(2)(ii), or § 63.1316(c)(1), excluding § 63.1316(c)(1)(ii), shall comply with paragraph (b)(3) of this section.

(1) Comply with the applicable requirements of this subpart for each kind of emission in the stream as specified in paragraphs (a)(1) through (a)(7) of this section.

(2) Comply with the first set of requirements, identified in paragraphs (b)(2)(i) through (b)(2)(vi) of this section, which applies to any individual emission stream that is included in the combined stream, where either that emission stream would be classified as Group 1 in the absence of combination with other emission streams, or the owner or operator chooses to consider that emission stream to be Group 1 for purposes of this paragraph. Compliance with the first applicable set of requirements identified in paragraphs (b)(2)(i) through (b)(2)(vi) of this section constitutes compliance with all other requirements in paragraphs (b)(2)(i) through (b)(2)(vi) of this section applicable to other types of emissions in the combined stream.

(i) The requirements of this subpart for Group 1 continuous process vents subject to § 63.1315, including applicable monitoring, recordkeeping, and reporting;

(ii) The requirements of § 63.1316(b)(1)(i)(A), § 63.1316(b)(1)(ii), § 63.1316(b)(2)(i), § 63.1316(b)(2)(ii), or § 63.1316(c)(1), excluding § 63.1316(c)(1)(ii), as appropriate, for control of emissions from continuous process vents subject to the control requirements of § 63.1316, including applicable monitoring, recordkeeping, and reporting requirements;

(iii) The requirements of § 63.119(e), as specified in § 63.1314, for control of emissions from Group 1 storage vessels, including applicable monitoring, recordkeeping, and reporting;

(iv) The requirements of § 63.139, as specified in § 63.1330, for control devices used to control emissions from waste management units, including applicable monitoring, recordkeeping, and reporting;

(v) The requirements of § 63.139, as specified in § 63.1330, for closed vent systems for control of emissions from in-process equipment subject to § 63.149, as specified in § 63.1330, including applicable monitoring, recordkeeping, and reporting; or

(vi) The requirements of this subpart for aggregate batch vent streams subject to § 63.1321(c), including applicable monitoring, recordkeeping, and reporting.

(3) The owner or operator of an affected source with combined emission streams containing one or more batch process vents but not containing one or more continuous process vents subject to § 63.1315, § 63.1316(b)(1)(i)(A), § 63.1316(b)(1)(ii), § 63.1316(b)(2)(i), § 63.1316(b)(2)(ii), or § 63.1316(c)(1), excluding § 63.1316(c)(1)(ii), shall comply with paragraph (b)(3)(i) and (b)(3)(ii) of this section.

(i) The owner or operator of the affected source shall comply with § 63.1321 for the batch process vent(s).

(ii) The owner or operator of the affected source shall comply with either paragraph (b)(1) or (b)(2) of this section, as appropriate, for the remaining emission streams.

(c) Instead of complying with §§ 63.1314, 63.1315, 63.1316 through 63.1320, 63.1321, and 63.1330, the owner or operator of an existing affected source may elect to control any or all of the storage vessels, batch process vents, aggregate batch vent streams,

continuous process vents, and wastewater streams and associated waste management units within the affected source to different levels using an emissions averaging compliance approach that uses the procedures specified in § 63.1332. The restrictions concerning which emission points may be included in an emissions average, including how many emission points may be included, are specified in § 63.1332(a)(1). An owner or operator electing to use emissions averaging shall still comply with the provisions of §§ 63.1314, 63.1315, 63.1316 through 63.1320, 63.1321, and 63.1330 for affected source emission points not included in the emissions average.

(d) A State may decide not to allow the use of the emissions averaging compliance approach specified in paragraph (c) of this section.

33. Section 63.1314 is amended by:

a. Revising paragraph (a) introductory text;

b. Revising paragraph (a)(1) through (a)(3);

c. Revising paragraph (a)(5) through (a)(16);

d. Revising paragraph (b) introductory text;

e. Revising paragraph (c); and

f. Adding paragraph (a)(17).

The revisions and additions read as follows:

§ 63.1314 Storage vessel provisions.

(a) This section applies to each storage vessel that is assigned to an affected source, as determined by § 63.1310(g). Except as provided in paragraphs (b) through (d) of this section, the owner or operator of an affected source shall comply with the requirements of §§ 63.119 through 63.123 and 63.148 for those storage vessels, with the differences noted in paragraphs (a)(1) through (a)(17) of this section for the purposes of this subpart.

(1) When the term "storage vessel" is used in §§ 63.119 through 63.123, the definition of this term in § 63.1312 shall apply for the purposes of this subpart.

(2) When the term "Group 1 storage vessel" is used in §§ 63.119 through 63.123, the definition of this term in § 63.1312 shall apply for the purposes of this subpart.

(3) When the term "Group 2 storage vessel" is used in §§ 63.119 through 63.123, the definition of this term in § 63.1312 shall apply for the purposes of this subpart.

* * * * *

(5) When December 31, 1992, is referred to in § 63.119, March 29, 1995 shall apply instead, for the purposes of this subpart.

(6) When April 22, 1994, is referred to in § 63.119, June 19, 2000 shall apply instead, for the purposes of this subpart.

(7) Each owner or operator of an affected source shall comply with this paragraph (a)(7) instead of § 63.120(d)(1)(ii) for the purposes of this subpart. If the control device used to comply with § 63.119(e) is also used to comply with any of the requirements found in § 63.1315, § 63.1316, § 63.1322, or § 63.1330, the performance test required in or accepted by the applicable requirements of §§ 63.1315, 63.1316, 63.1322, and 63.1330 is acceptable for demonstrating compliance with § 63.119(e) for the purposes of this subpart. The owner or operator is not required to prepare a design evaluation for the control device as described in § 63.120(d)(1)(i), if the performance test meets the criteria specified in paragraphs (a)(7)(i) and (a)(7)(ii) of this section.

(i) The performance test demonstrates that the control device achieves greater than or equal to the required control efficiency specified in § 63.119(e)(1) or § 63.119(e)(2), as applicable; and

(ii) The performance test is submitted as part of the Notification of Compliance Status required by § 63.1335(e)(5).

(8) When the term "range" is used in §§ 63.120(d)(3), 63.120(d)(5), and 63.122(g)(2), the term "level" shall apply instead, for the purposes of this subpart.

(9) For purposes of this subpart, the monitoring plan required by § 63.120(d)(2) shall specify for which control devices the owner or operator has selected to follow the procedures for continuous monitoring specified in § 63.1334. For those control devices for which the owner or operator has selected to not follow the procedures for continuous monitoring specified in § 63.1334, the monitoring plan shall include a description of the parameter or parameters to be monitored to ensure that the control device is being properly operated and maintained, an explanation of the criteria used for selection of that parameter (or parameters), and the frequency with which monitoring will be performed (*e.g.*, when the liquid level in the storage vessel is being raised), as specified in § 63.120(d)(2)(i).

(10) For purposes of this subpart, the monitoring plan required by § 63.122(b) shall be included in the Notification of Compliance Status required by § 63.1335(e)(5).

(11) When the Notification of Compliance Status requirements contained in § 63.152(b) are referred to in §§ 63.120, 63.122, and 63.123, the Notification of Compliance Status requirements contained in § 63.1335(e)(5) shall apply for the purposes of this subpart.

(12) When the Periodic Report requirements contained in § 63.152(c) are referred to in §§ 63.120 and 63.122, the Periodic Report requirements contained in § 63.1335(e)(6) shall apply for the purposes of this subpart.

(13) When other reports as required in § 63.152(d) are referred to in § 63.122, the reporting requirements contained in § 63.1335(e)(7) shall apply for the purposes of this subpart.

(14) When the Initial Notification requirements contained in § 63.151(b) are referred to in § 63.122, the owner or operator of an affected source subject to this subpart need not comply for the purposes of this subpart.

(15) When the determination of equivalence criteria in § 63.102(b) is referred to in § 63.121(a), the provisions in § 63.6(g) shall apply for the purposes of this subpart.

(16) When § 63.119(a) requires compliance according to the schedule provisions in § 63.100, owners and operators of affected sources shall instead comply with the requirements in §§ 63.119(a)(1) through 63.119(a)(4) by the compliance date for storage vessels, which is specified in § 63.1311.

(17) In § 63.120(e)(1), instead of the reference to § 63.11(b), the requirements of § 63.1333(e) shall apply.

(b) Owners or operators of Group 1 storage vessels that are assigned to a new affected source producing SAN using a continuous process shall control emissions to the levels indicated in paragraphs (b)(1) and (b)(2) of this section.

* * * * *

(c) Owners or operators of Group 1 storage vessels that are assigned to a new or existing affected source producing ASA/AMSAN shall control emissions by at least 98 percent relative to uncontrolled emissions.

* * * * *

34. Section 63.1315 is amended by:

a. Revising paragraphs (a)(1) through (a)(4);

b. Revising paragraphs (a)(9) through (a)(17);

c. Revising paragraph (b) introductory text;

d. Revising paragraph (b)(1)(ii);

e. Revising paragraph (c); and

f. Revising paragraph (d).

The revisions read as follows:

§ 63.1315 Continuous process vents provisions.

(a) * * *

(1) When the term "process vent" is used in §§ 63.113 through 63.118, the

term "continuous process vent," and the definition of this term in § 63.1312 shall apply for the purposes of this subpart.

(2) When the term "Group 1 process vent" is used in §§ 63.113 through 63.118, the term "Group 1 continuous process vent," and the definition of this term in § 63.1312 shall apply for the purposes of this subpart.

(3) When the term "Group 2 process vent" is used in §§ 63.113 through 63.118, the term "Group 2 continuous process vent," and the definition of this term in § 63.1312 shall apply for the purposes of this subpart.

(4) When December 31, 1992 is referred to in § 63.113, apply the date March 29, 1995, for the purposes of this subpart.

* * * * *

(9) When § 63.114(e) specifies that an owner or operator shall submit the information required in § 63.152(b) in order to establish the parameter monitoring range, the owner or operator of an affected source shall comply with the provisions of § 63.1334 for establishing the parameter monitoring level and shall comply with § 63.1335(e)(5) for purposes of reporting information related to establishment of the parameter monitoring level for purposes of this subpart. Further, the term "level" shall apply when the term "range" is used in §§ 63.114, 63.117, and 63.118.

(10) When reports of process changes are required under § 63.118(g), (h), (i), or (j), paragraphs (a)(10)(i) through (a)(10)(iv) of this section shall apply for the purposes of this subpart. In addition, for the purposes of this subpart, paragraph (a)(10)(v) of this section applies, and § 63.118(k) does not apply to owners or operators of affected sources.

(i) For the purposes of this subpart, whenever a process change, as defined in § 63.115(e), is made that causes a Group 2 continuous process vent to become a Group 1 continuous process vent, the owner or operator shall submit a report within 180 days after the process change is made or with the next Periodic Report, whichever is later. A description of the process change shall be submitted with the report of the process change, and the owner or operator of the affected source shall comply with the Group 1 provisions in §§ 63.113 through 63.118 in accordance with § 63.1310(i)(2)(ii) or (i)(2)(iii), as applicable.

(ii) Whenever a process change, as defined in § 63.115(e), is made that causes a Group 2 continuous process vent with a TRE greater than 4.0 to become a Group 2 continuous process vent with a TRE less than 4.0, the owner or operator shall submit a report within 180 days after the process change is made or with the next Periodic Report, whichever is later. A description of the process change shall be submitted with the report of the process change, and the owner or operator shall comply with the provisions in § 63.113(d) by the dates specified in § 63.1311.

(iii) Whenever a process change, as defined in § 63.115(e), is made that causes a Group 2 continuous process vent with a flow rate less than 0.005 standard cubic meter per minute to become a Group 2 continuous process vent with a flow rate of 0.005 standard cubic meter per minute or greater and a TRE index value less than or equal to 4.0, the owner or operator shall submit a report within 180 days after the process change is made or with the next Periodic Report, whichever is later. A description of the process change shall be submitted with the report of the process change, and the owner or operator shall comply with the provisions in § 63.113(d) by the dates specified in § 63.1311.

(iv) Whenever a process change, as defined in § 63.115(e), is made that causes a Group 2 continuous process vent with an organic HAP concentration less than 50 parts per million by volume to become a Group 2 continuous process vent with an organic HAP concentration of 50 parts per million by volume or greater and a TRE index value less than or equal to 4.0, the owner or operator shall submit a report within 180 days after the process change is made or with the next Periodic Report, whichever is later. A description of the process change shall be submitted with the report of the process change, and the owner or operator shall comply with the provisions in § 63.113(d) by the dates specified in § 63.1311.

(v) The owner or operator is not required to submit a report of a process change if one of the conditions listed in paragraphs (a)(10)(v)(A), (a)(10)(v)(B), (a)(10)(v)(C), or (a)(10)(v)(D) of this section is met.

(A) The process change does not meet the definition of a process change in § 63.115(e);

(B) The vent stream flow rate is recalculated according to § 63.115(e) and the recalculated value is less than 0.005 standard cubic meter per minute;

(C) The organic HAP concentration of the vent stream is recalculated according to § 63.115(e) and the recalculated value is less than 50 parts per million by volume; or (D) The TRE index value is recalculated according to § 63.115(e) and the recalculated value is greater than 4.0, or for the affected sources producing methyl methacrylate butadiene styrene resin the recalculated value is greater than 6.7.

(11) When the provisions of § 63.116(c)(3) and (c)(4) specify that Method 18, 40 CFR part 60, appendix A shall be used, Method 18 or Method 25A, 40 CFR part 60, appendix A may be used for the purposes of this subpart. The use of Method 25A, 40 CFR part 60, appendix A shall conform with the requirements in paragraphs (a)(11)(i) and (a)(11)(ii) of this section.

(i) The organic HAP used as the calibration gas for Method 25A, 40 CFR part 60, appendix A shall be the single organic HAP representing the largest percent by volume of the emissions.

(ii) The use of Method 25A, 40 CFR part 60, appendix A is acceptable if the response from the high-level calibration gas is at least 20 times the standard deviation of the response from the zero calibration gas when the instrument is zeroed on the most sensitive scale.

(12) When § 63.118, periodic reporting and recordkeeping requirements, refers to § 63.152(f), the recordkeeping requirements in § 63.1335(d) shall apply for purposes of this subpart.

(13) If a batch process vent or aggregate batch vent stream is combined with a continuous process vent, the owner or operator of the affected source containing the combined vent stream shall comply with paragraph (a)(13)(i); with paragraph (a)(13)(ii) and with paragraph (a)(13)(iii) or (iv); or with paragraph (a)(13)(v) of this section, as appropriate.

(i) If a batch process vent or aggregate batch vent stream is combined with a Group 1 continuous process vent prior to the combined vent stream being routed to a control device, the owner or operator of the affected source containing the combined vent stream shall comply with the requirements in paragraph (a)(13)(i)(A) or (B) of this section.

(A) All requirements for a Group 1 process vent stream in §§ 63.113 through 63.118, except as otherwise provided in this section. As specified in § 63.1333(a)(1), performance tests shall be conducted at maximum representative operating conditions. For the purpose of conducting a performance test on a combined vent stream, maximum representative operating conditions shall be when batch emission episodes are occurring that result in the highest organic HAP emission rate (for the combined vent stream) that is achievable during one of the periods listed in § 63.1333(a)(1)(i) or § 63.1333(a)(1)(ii), without causing any

of the situations described in paragraphs (a)(13)(i)(A)(*1*) through (*3*) to occur.

(*1*) Causing damage to equipment.

(*2*) Necessitating that the owner or operator make product that does not meet an existing specification for sale to a customer; or

(*3*) Necessitating that the owner or operator make product in excess of demand.

(B) Comply with the provisions in § 63.1313(b)(1), as allowed under § 63.1313(b).

(ii) If a batch process vent or aggregate batch vent stream is combined with a continuous process vent prior to the combined vent stream being routed to a recovery device, the TRE index value for the combined vent stream shall be calculated at the exit of the last recovery device. The TRE shall be calculated during periods when one or more batch emission episodes are occurring that result in the highest organic HAP emission rate (in the combined vent stream that is being routed to the recovery device) that is achievable during the 6-month period that begins 3 months before and ends 3 months after the TRE calculation, without causing any of the situations described in paragraphs (a)(13)(ii)(A) through (C) to occur.

(A) Causing damage to equipment.

(B) Necessitating that the owner or operator make product that does not meet an existing specification for sale to a customer; or

(C) Necessitating that the owner or operator make product in excess of demand.

(iii) If the combined vent stream described in paragraph (a)(10)(ii) of this section meets the requirements in paragraphs (a)(13)(iii)(A), (B), and (C) of this section, the combined vent stream shall be subject to the requirements for Group 1 process vents in §§ 63.113 through 63.118, except as otherwise provided in this section, as applicable. Performance tests for the combined vent stream shall be conducted at maximum operating conditions, as described in paragraph (a)(13)(i) of this section.

(A) The TRE index value of the combined stream is less than or equal to 1.0;

(B) The flow rate of the combined vent stream is greater than or equal to 0.005 standard cubic meter per minute; and

(C) The total organic HAP concentration is greater than or equal to 50 parts per million by volume for the combined vent stream.

(iv) If the combined vent stream described in paragraph (a)(10)(ii) of this section meets the requirements in paragraph (a)(13)(iv)(A), (B), or (C) of this section, the combined vent stream shall be subject to the requirements for Group 2 process vents in §§ 63.113 through 63.118, except as otherwise provided in this section, as applicable.

(A) The TRE index value of the combined vent stream is greater than 1.0;

(B) The flow rate of the combined vent stream is less than 0.005 standard cubic meter per minute; or

(C) The total organic HAP concentration is less than 50 parts per million by volume for the combined vent stream.

(v) If a batch process vent or aggregate batch vent stream is combined with a Group 2 continuous process vent, the owner or operator shall comply with the requirements in either paragraph (a)(13)(v)(A) or (a)(13)(v)(B) of this section.

(A) The owner or operator shall comply with the requirements in §§ 63.113 through 63.118 for Group 1 process vents; or

(B) The owner or operator shall comply with § 63.1322(e)(2) for batch process vents and aggregate batch vent streams.

(14) If any gas stream that originates outside of an affected source that is subject to this subpart is normally conducted through the same final recovery device as any continuous process vent stream subject to this subpart, the owner or operator of the affected source with the combined vent stream shall comply with all requirements in §§ 63.113 through 63.118 of subpart G of this part, except as otherwise noted in this section, as applicable.

(i) Instead of measuring the vent stream flow rate at the sampling site specified in § 63.115(b)(1), the sampling site for vent stream flow rate shall be prior to the final recovery device and prior to the point at which the gas stream that is not controlled under this subpart is introduced into the combined vent stream.

(ii) Instead of measuring total organic HAP or TOC concentrations at the sampling site specified in § 63.115(c)(1), the sampling site for total organic HAP or TOC concentration shall be prior to the final recovery device and prior to the point at which the gas stream that is not controlled under this subpart is introduced into the combined vent stream.

(iii) The efficiency of the final recovery device (determined according to paragraph (a)(14)(iv) of this section) shall be applied to the total organic HAP or TOC concentration measured at the sampling site described in paragraph (a)(14)(ii) of this section to determine the exit concentration. This exit concentration of total organic HAP or TOC shall then be used to perform the calculations outlined in § 63.115(d)(2)(iii) and § 63.115(d)(2)(iv), for the combined vent stream exiting the final recovery device.

(iv) The efficiency of the final recovery device is determined by measuring the total organic HAP or TOC concentration using Method 18 or 25A, 40 CFR part 60, appendix A, at the inlet to the final recovery device after the introduction of any gas stream that is not controlled under this subpart, and at the outlet of the final recovery device.

(15) When § 63.115(c)(3)(ii)(B) and (d)(2)(iv) and § 63.116(c)(3)(ii)(B) and (c)(4)(ii)(C) refer to Table 2 of subpart F of this part, the owner or operator is only required to consider organic HAP listed on Table 6 of this subpart for purposes of this subpart.

(16) The compliance date for continuous process vents subject to the provisions of this section is specified in § 63.1311.

(17) In § 63.116(a), instead of the reference to § 63.11(b), the requirements in § 63.1333(e) shall apply.

* * * * *

(b) Owners or operators of existing affected sources producing MBS shall comply with either paragraph (b)(1) or (b)(2) of this section.

(1) * * *

(ii) When complying with this paragraph (b) and the term "TRE of 4.0" is used, or related terms indicating a TRE index value of 4.0, referred to in §§ 63.113 through 63.118, are used, the term "TRE of 6.7," shall apply instead, for the purposes of this subpart. The TRE range of 3.7 to 6.7 for continuous process vents at existing affected sources producing MBS corresponds to the TRE range of 1.0 to 4.0 for other continuous process vents, as it applies to monitoring, recordkeeping, and reporting.

* * * * *

(c) Owners or operators of new affected sources producing SAN using a batch process shall comply with the applicable requirements in § 63.1321.

(d) Affected sources producing PET or polystyrene using a continuous process are not subject to the provisions of this section and instead are subject to the emissions control provisions of § 63.1316, the monitoring provisions of § 63.1317, the testing and compliance demonstration provisions of § 63.1318, the recordkeeping provisions of § 63.1319, and the reporting provisions of § 63.1320. However, in some instances, as specified in § 63.1316, select continuous process vents present

at affected sources producing PET or polystyrene using a continuous process are subject to the provisions of this section.

* * * * *

35. Section 63.1316 is amended by:

a. Revising the section title;

b. Revising paragraph (a);

c. Revising paragraph (b); introductory text;

d. Revising paragraph (b)(1) introductory text;

e. Revising paragraph (b)(1)(i) introductory text;

f. Revising paragraphs (b)(1)(i)(A) and (b)(1)(i)(B);

g. Revising paragraphs (b)(1)(ii) (b)(1)(iii), and (b)(1)(iv);

h. Revising paragraph (b)(2) introductory text;

i. Revising paragraphs (b)(2)(i), (b)(2)(ii), (b)(2)(iii), and (b)(2)(iv);

j. Revising paragraph (c) introductory text;

k. Revising paragraph (c)(1) introductory text;

l. Revising paragraphs (c)(1)(i) and (c)(1)(ii);

m. Revising paragraph (c)(1)(iii)(A);

n. Revising paragraph (c)(1)(iii)(C); and

o. Revising paragraph (c)(3).

The revisions read as follows:

§ 63.1316 PET and polystyrene affected sources—emissions control provisions.

(a) The owner or operator of an affected source producing PET using a continuous process shall comply with paragraph (b) of this section. The owner or operator of an affected source producing polystyrene using a continuous process shall comply with paragraph (c) of this section. As specified in paragraphs (b) and (c) of this section, owners or operators shall comply with § 63.1315 for certain continuous process vents and with § 63.1321 for all batch process vents. The owner or operator of an affected source producing PET using a batch process or producing polystyrene using a batch process shall comply with § 63.1315 for continuous process vents and with § 63.1321 for batch process vents, instead of the provisions of §§ 63.1316 through 63.1320.

(b) The owner or operator of an affected source producing PET using a continuous process shall comply with the requirements specified in paragraphs (b)(1) or (b)(2) of this section, as appropriate, and are not required to comply with the requirements specified in 40 CFR part 60, subpart DDD. Compliance can be based on either organic HAP or TOC.

(1) The owner or operator of an affected source producing PET using a continuous dimethyl terephthalate process shall comply with paragraphs (b)(1)(i) through (b)(1)(iv) of this section.

(i) The owner or operator of an existing affected source with organic HAP emissions greater than 0.12 kg organic HAP per Mg of product from continuous process vents in the collection of material recovery sections (*i.e.*, methanol recovery) within the affected source shall comply with either paragraph (b)(1)(i)(A), (b)(1)(i)(B), or (b)(1)(i)(C) of this section. Emissions from continuous process vents in the collection of material recovery sections within the affected source shall be determined by the procedures specified in § 63.1318(b). The owner or operator of a new affected source shall comply with either paragraph (b)(1)(i)(A), (b)(1)(i)(B), or (b)(1)(i)(C) of this section.

(A) Organic HAP emissions from all continuous process vents in each individual material recovery section shall, as a whole, be no greater than 0.018 kg organic HAP per Mg of product from the associated TPPU(s); or alternatively, organic HAP emissions from all continuous process vents in the collection of material recovery sections within the affected source shall, as a whole, be no greater than 0.018 kg organic HAP per Mg product from all associated TPPU(s);

(B) As specified in § 63.1318(d), the owner or operator shall maintain the daily average outlet gas stream temperature from each final condenser in a material recovery section at a temperature of +3°C (+37°F) or less (*i.e.*, colder);

* * * * *

(ii) Limit organic HAP emissions from continuous process vents in the collection of polymerization reaction sections within the affected source by complying with either paragraph (b)(1)(ii)(A) or (b)(1)(ii)(B) of this section.

(A) Organic HAP emissions from all continuous process vents in each individual polymerization reaction section (including emissions from any equipment used to further recover ethylene glycol, but excluding emissions from process contact cooling towers) shall, as a whole, be no greater than 0.02 kg organic HAP per Mg of product from the associated TPPU(s); or alternatively, organic HAP emissions from all continuous process vents in the collection of polymerization reaction sections within the affected source shall, as a whole, be no greater than 0.02 kg organic HAP per Mg product from all associated TPPU(s); or

(B) Comply with paragraph (b)(1)(v) of this section.

(iii) Continuous process vents not included in a material recovery section, as specified in paragraph (b)(1)(i) of this section, and not included in a polymerization reaction section, as specified in paragraph (b)(1)(ii) of this section, shall comply with § 63.1315.

(iv) Batch process vents shall comply with § 63.1321.

* * * * *

(2) The owner or operator of an affected source producing PET using a continuous terephthalic acid process shall comply with paragraphs (b)(2)(i) through (b)(2)(iv) of this section.

(i) Limit organic HAP emissions from continuous process vents in the collection of raw material preparation sections within the affected source by complying with either paragraph (b)(2)(i)(A) or (b)(2)(i)(B) of this section.

(A) Organic HAP emissions from all continuous process vents associated with the esterification vessels in each individual raw materials preparation section shall, as a whole, be no greater than 0.04 kg organic HAP per Mg of product from the associated TPPU(s); or alternatively, organic HAP emissions from all continuous process vents associated with the esterification vessels in the collection of raw material preparation sections within the affected source shall, as a whole, be no greater than 0.04 kg organic HAP per Mg of product from all associated TPPU(s). Other continuous process vents (*i.e.*, those not associated with the esterification vessels) in the collection of raw materials preparation sections within the affected source shall comply with § 63.1315; or

(B) Comply with paragraph (b)(2)(v) of this section.

(ii) Limit organic HAP emissions from continuous process vents in the collection of polymerization reaction sections within the affected source by complying with either paragraph (b)(2)(ii)(A) or (b)(2)(ii)(B) of this section.

(A) Organic HAP emissions from all continuous process vents in each individual polymerization reaction section (including emissions from any equipment used to further recover ethylene glycol, but excluding emissions from process contact cooling towers) shall, as a whole, be no greater than 0.02 kg organic HAP per Mg of product from the associated TPPU(s); or alternatively, organic HAP emissions from all continuous process vents in the collection of polymerization reaction sections within the affected source shall, as a whole, be no greater than 0.02 kg organic HAP per Mg of product from all associated TPPU(s); or

(B) Comply with paragraph (b)(2)(v) of this section.

(iii) Continuous process vents not included in a raw materials preparation section, as specified in paragraphs (b)(2)(i) of this section, and not included in a polymerization reaction section, as specified in paragraph (b)(2)(ii) of this section, shall comply with § 63.1315.

(iv) Batch process vents shall comply with § 63.1321.

* * * * *

(c) The owner or operator of an affected source producing polystyrene resin using a continuous process shall comply with the requirements specified in paragraphs (c)(1) through (c)(3) of this section, as appropriate, instead of the requirements specified in 40 CFR part 60, subpart DDD. Compliance can be based on either organic HAP or TOC.

(1) Limit organic HAP emissions from continuous process vents in the collection of material recovery sections within the affected source by complying with either paragraph (c)(1)(i), (c)(1)(ii), or (c)(1)(iii) of this section.

(i) Organic HAP emissions from all continuous process vents in each individual material recovery section shall, as a whole, be no greater than 0.0036 kg organic HAP per Mg of product from the associated TPPU(s); or alternatively, organic HAP emissions from all continuous process vents in the collection of material recovery sections within the affected source shall, as a whole, be no greater than 0.0036 kg organic HAP per Mg of product from all associated TPPU(s);

(ii) As specified in § 63.1318(d), the owner or operator shall maintain the daily average outlet gas stream temperature from each final condenser in a material recovery section at a temperature of −25°C (−13°F) or less (*i.e.*, colder); or

(iii) * * *

(A) Reduce the emissions in a combustion device to achieve 98 weight percent reduction or to achieve a concentration of 20 parts per million by volume (ppmv) on a dry basis, whichever is less stringent. If an owner or operator elects to comply with the 20 ppmv standard, the concentration shall include a correction to 3 percent oxygen only when supplemental combustion air is used to combust the emissions;

* * * * *

(C) Combust the emissions in a flare that complies with the requirements of § 63.1333(e).

* * * * *

(3) Batch process vents shall comply with § 63.1321.

36. Section 63.1317 is revised (including the section title) to read as follows:

§ 63.1317 PET and polystyrene affected sources—monitoring provisions.

Continuous process vents using a control or recovery device to comply with § 63.1316 shall comply with the applicable monitoring provisions specified for continuous process vents in § 63.1315(a), except that references to group determinations (*i.e.*, total resource effectiveness) do not apply and owners or operators are not required to comply with § 63.113.

37. Section 63.1318 is amended by:

a. Revising the section title;

b. Revising paragraph (a);

c. Revising paragraph (b) introductory text;

d. Revising paragraph (b)(1)(i) introductory text;

e. Revising paragraph (c); and

f. Revising paragraph (d).

The revisions read as follows:

§ 63.1318 PET and polystyrene affected sources—testing and compliance demonstration provisions.

(a) Except as specified in paragraphs (b) through (d) of this section, continuous process vents using a control or recovery device to comply with § 63.1316 shall comply with the applicable testing and compliance provisions for continuous process vents specified in § 63.1315, except that, for the purposes of this paragraph (a), references to group determinations (*i.e.*, total resource effectiveness) do not apply and owners or operators are not required to comply with § 63.113.

(b) *PET Affected Sources Using a Dimethyl Terephthalate Process—Applicability Determination Procedure.* Owners or operators shall calculate organic HAP emissions from the collection of material recovery sections at an existing affected source producing PET using a continuous dimethyl terephthalate process to determine whether § 63.1316(b)(1)(i) is applicable using the procedures specified in either paragraph (b)(1) or (b)(2) of this section.

(1) * * *

(i) The mass emission rate for each continuous process vent, E_i, shall be determined according to the procedures specified in § 63.116(c)(4). The sampling site for determining whether § 63.1316(b)(1)(i) is applicable shall be at the outlet of the last recovery or control device. When the provisions of § 63.116(c)(4) specify that Method 18, 40 CFR part 60, appendix A shall be used, Method 18 or Method 25A, 40 CFR part 60, appendix A may be used for the purposes of this subpart. The use of Method 25A, 40 CFR part 60, appendix A shall comply with paragraphs (b)(1)(i)(A) and (b)(1)(i)(B) of this section.

* * * * *

(c) *Compliance with Mass Emissions per Mass Product Standards.* Owners or operators complying with § 63.1316(b)(1)(i)(A), (b)(1)(ii), (b)(2)(i), (b)(2)(ii), and (c)(1)(i) shall demonstrate compliance with the mass emissions per mass product requirements using the procedures specified in paragraph (b)(1) of this section.

(d) *Compliance with Temperature Limits for Final Condensers.* Owners or operators complying with § 63.1316(b)(1)(i)(B) or § 63.1316(c)(1)(ii) shall demonstrate continuous compliance based on an average exit temperature determined for each operating day. Calculation of the daily average exit temperature shall follow the provisions of § 63.1335(d)(3). The provisions of § 63.1334(f) and (g) shall apply for the purposes of determining whether or not an owner or operator is to be deemed out of compliance for a given operating day.

38. Section 63.1319 is amended by:

a. Revising the section title;

b. Revising paragraph (a);

c. Revising paragraph (b) introductory text;

d. Revising paragraph (b)(2); and

e. Revising paragraph (c).

The revisions read as follows:

§ 63.1319 PET and polystyrene affected sources—recordkeeping provisions.

(a) Except as specified in paragraphs (b) and (c) of this section, owners or operators using a control or recovery device to comply with § 63.1316 shall comply with the applicable recordkeeping provisions specified in § 63.1315, except that, for the purposes of this paragraph (a), references to group determinations (*i.e.*, total resource effectiveness) do not apply, and owners or operators are not required to comply with § 63.113.

(b) *Records Demonstrating Compliance With the Applicability Determination Procedure for PET Affected Sources Using a Dimethyl Terephthalate Process.* Owners or operators complying with § 63.1316(b)(1)(i) by demonstrating that mass emissions per mass product are less than or equal to the level specified in § 63.1316(b)(1)(i) (*i.e.*, 0.12 kg organic HAP per Mg of product) shall keep the following records.

* * * * *

(2) Records of any change in process operation that increases the mass emissions per mass product.

(c) *Records Demonstrating Compliance with Temperature Limits for Final Condensers.* Owners or operators of continuous process vents complying with § 63.1316(b)(1)(i)(B) or § 63.1316(c)(1)(ii) shall keep records of

the daily averages required by § 63.1318, per the recordkeeping provisions specified in § 63.1335(d).

39. Section 63.1320 is revised to read as follows:

§ 63.1320 PET and polystyrene affected sources—reporting provisions.

(a) Except as specified in paragraph (b) of this section, owners and operators using a control or recovery device to comply with § 63.1316 shall comply with the applicable reporting provisions specified in § 63.1315, except that, for the purposes of this paragraph (a), references to group determinations (*i.e.*, total resource effectiveness) do not apply, and owners or operators are not required to comply with § 63.113.

(b) *Reporting for PET Affected Sources Using a Dimethyl Terephthalate Process.* Owners or operators complying with § 63.1316 by demonstrating that mass emissions per mass product are less than or equal to the level specified in § 63.1316(b)(1)(i) (*i.e.*, 0.12 kg organic HAP per Mg of product) shall comply with paragraphs (b)(1) through (b)(3) of this section.

(1) Include the information specified in § 63.1319(b)(2) in each Periodic Report, required by § 63.1335(e)(6), as appropriate.

(2) Include the information specified in § 63.1319(b)(1) in the Notification of Compliance Status, required by § 63.1335(e)(5).

(3) Whenever a process change, as defined in § 63.115(e), is made that causes emissions from continuous process vents in the collection of material recovery sections (*i.e.*, methanol recovery) within the affected source to be greater than 0.12 kg organic HAP per Mg of product, the owner or operator shall submit a report within 180 days after the process change is made or the information regarding the process change is known to the owner or operator. This report may be included in the next Periodic Report as specified in § 63.1335(e)(6)(iii)(D)(*2*). The report shall include the information specified in § 63.1319(b)(1) and a description of the process change.

40. Section 63.1321 is amended by revising paragraphs (a) and (c), to read as follows:

§ 63.1321 Batch process vents provisions.

(a) *Batch process vents.* Except as specified in paragraphs (b) through (d) of this section, owners and operators of new and existing affected sources with batch process vents shall comply with the requirements in §§ 63.1322 through 63.1327. The batch process vent group status shall be determined in accordance with § 63.1323. Owners or operators of batch process vents classified as Group 1 shall comply with the reference control technology requirements for Group 1 batch process vents in § 63.1322, the monitoring requirements in § 63.1324, the performance test methods and procedures to determine compliance in § 63.1325, the recordkeeping requirements in § 63.1326, and the reporting requirements in § 63.1327. Owners or operators of all Group 2 batch process vents shall comply with the applicable reference control technology requirements in § 63.1322, the applicable recordkeeping requirements in § 63.1326, and the applicable reporting requirements in § 63.1327.

* * * * *

(c) *Aggregate batch vent streams.* Aggregate batch vent streams, as defined in § 63.1312, are subject to the control requirements specified in § 63.1322(b), as well as the monitoring, testing, recordkeeping, and reporting requirements specified in §§ 63.1324 through 63.1327 for aggregate batch vent streams.

* * * * *

41. Section 63.1322 is amended by:

a. Revising paragraph (a) introductory text;

b. Revising paragraph (a)(1)(i);

c. Revising paragraph (b) introductory text;

d. Revising paragraph (b)(1)(i);

e. Revising paragraph (b)(2);

f. Revising paragraphs (c)(1) and (c)(2);

g. Revising paragraph (e);

h. Revising paragraph (f);

i. Revising paragraph (g); and

j. Adding paragraph (h).

The revisions and additions read as follows:

§ 63.1322 Batch process vents—reference control technology.

(a) *Batch process vents.* The owner or operator of a Group 1 batch process vent, as determined using the procedures in § 63.1323, shall comply with the requirements of either paragraph (a)(1) or (a)(2) of this section, except as provided for in paragraph (a)(3) of this section. Compliance may be based on either organic HAP or TOC.

(1) * * *

(i) The owner or operator shall comply with the requirements of § 63.1333(e) for the flare.

* * * * *

(b) *Aggregate batch vent streams.* The owner or operator of an aggregate batch vent stream that contains one or more Group 1 batch process vents shall comply with the requirements of either paragraph (b)(1) or (b)(2) of this section, except as provided for in paragraph (b)(3) of this section. Compliance may be based on either organic HAP or TOC.

(1) * * *

(i) The owner or operator shall comply with the requirements of § 63.1333(e) for the flare.

* * * * *

(2) For each aggregate batch vent stream, reduce organic HAP emissions by 90 weight percent or to a concentration of 20 parts per million by volume, whichever is less stringent, on a continuous basis using a control device. For purposes of complying with the 20 parts per million by volume outlet concentration standard, the outlet concentration shall be calculated on a dry basis. When a combustion device is used for purposes of complying with the 20 parts per million by volume outlet concentration standard, the concentration shall be corrected to 3 percent oxygen if supplemental combustion air is used to combust the emissions. If supplemental combustion air is not used, a correction to 3 percent oxygen is not required.

* * * * *

(c) * * *

(1) If a combustion device is used to comply with paragraph (a)(2), (a)(3), (b)(2), or (b)(3) of this section for a halogenated batch process vent, halogenated aggregate batch vent stream, or halogenated continuous process vent, said emissions exiting the combustion device shall be ducted to a halogen reduction device that reduces overall emissions of hydrogen halides and halogens by at least 99 percent before discharge to the atmosphere.

(2) A halogen reduction device may be used to reduce the halogen atom mass emission rate of said emissions to less than 3,750 kg/yr for batch process vents or aggregate batch vent streams and to less than 0.45 kilograms per hour for continuous process vents prior to venting to any combustion control device, and thus make the batch process vent, aggregate batch vent stream, or continuous process vent nonhalogenated. The nonhalogenated batch process vent, aggregate batch vent stream, or continuous process vent shall then comply with the requirements of either paragraph (a) or (b) of this section, as appropriate.

* * * * *

(e) *Combination of batch process vents or aggregate batch vent streams with continuous process vents.* If a batch process vent or aggregate batch vent stream is combined with a continuous process vent, the owner or operator shall determine whether the combined

vent stream is subject to the provisions of §§ 63.1321 through 63.1327 according to paragraphs (e)(1) and (e)(2) of this section.

(1) A batch process vent or aggregate batch vent stream combined with a continuous process vent is not subject to the provisions of §§ 63.1321 through 63.1327, if the requirements in paragraph (e)(1)(i) and in either paragraph (e)(1)(ii) or (e)(1)(iii) are met.

(i) The only emissions to the atmosphere from the batch process vent or aggregate batch vent stream prior to being combined with the continuous process vent are from equipment subject to § 63.1331.

(ii) The batch process vent or aggregate batch vent stream is combined with a Group 1 continuous process vent prior to the combined vent stream being routed to a control device. In this paragraph (e)(1)(ii), the definition of control device as it relates to continuous process vents shall be used. Furthermore, the combined vent stream discussed in this paragraph (e)(1)(ii) shall be subject to § 63.1315(a)(13)(i).

(iii) The batch process vent or aggregate batch vent stream is combined with a continuous process vent prior to being routed to a recovery device. In this paragraph (e)(1)(iii), the definition of recovery device as it relates to continuous process vents shall be used. Furthermore, the combined vent stream discussed in this paragraph (e)(1)(iii) shall be subject to § 63.1315(a)(13)(ii).

(2) If the batch process vent or aggregate batch vent stream is combined with a Group 2 continuous process vent, the group status of the batch process vent shall be determined prior to its combination with the Group 2 continuous process vent, in accordance with § 63.1323, and the combined vent stream shall be subject to the requirements for aggregate batch vent streams in §§ 63.1321 through 63.1327.

(f) *Group 2 batch process vents with annual emissions greater than or equal to the level specified in § 63.1323(d).* The owner or operator of a Group 2 batch process vent with annual emissions greater than or equal to the level specified in § 63.1323(d) shall comply with the provisions of paragraph (f)(1), (f)(2), or (h) of this section.

(1) The owner or operator of an affected source shall comply with the requirements in paragraphs (f)(1)(i) through (f)(1)(iv) of this section.

(i) The owner or operator shall establish a batch mass input limitation that ensures the Group 2 batch process vent does not become a Group 1 batch process vent.

(ii) Over the course of the affected source's "year," as reported in the Notification of Compliance Status in accordance with § 63.1335(e)(5)(iv), the owner or operator shall not charge a mass of HAP or material to the batch unit operation that is greater than the level established as the batch mass input limitation.

(iii) The owner or operator shall comply with the recordkeeping requirements in § 63.1326(d)(2), and the reporting requirements in § 63.1327(a)(3), (b), and (c).

(iv) The owner or operator shall comply with § 63.1323(i) when process changes are made.

(2) Comply with the requirements of this subpart for Group 1 batch process vents.

(g) *Group 2 batch process vents with annual emissions less than the level specified in § 63.1323(d).* The owner or operator of a Group 2 batch process vent with annual emissions less than the level specified in § 63.1323(d) shall comply with paragraphs (g)(1), (g)(2), (g)(3), or (g)(4) of this section.

(1) The owner or operator of the affected source shall comply with the requirements in paragraphs (g)(1)(i) through (g)(1)(iv) of this section.

(i) The owner or operator shall establish a batch mass input limitation that ensures emissions do not exceed the level specified in § 63.1323(d).

(ii) Over the course of the affected source's "year," as reported in the Notification of Compliance Status in accordance with § 63.1335(e)(5)(iv), the owner or operator shall not charge a mass of HAP or material to the batch unit operation that is greater than the level established as the batch mass input limitation.

(iii) The owner or operator shall comply with the recordkeeping requirements in § 63.1326(d)(1), and the reporting requirements in § 63.1327(a)(2), (b), and (c).

(iv) The owner or operator of the affected source shall comply with § 63.1323(i) when process changes are made.

(2) Comply with the requirements of paragraph (f)(1) of this section;

(3) Comply with the requirements of paragraph (f)(2) of this section; or

(4) Comply with the requirements of paragraph (h) of this section.

(h) Owners or operators of Group 2 batch process vents are not required to establish a batch mass input limitation if the batch process vent is Group 2 at the conditions specified in paragraphs (h)(1) and (h)(2) of this section and if the owner or operator complies with the recordkeeping provisions in §§ 63.1326(a)(1) through (3), 63.1326(a)(9), and 63.1326(a)(4) through (6) as applicable, and the reporting requirements in § 63.1327(a)(5), (a)(6), and (b).

(1) Emissions for the single highest-HAP recipe (considering all products that are produced in the batch unit operation) are used in the group determination; and

(2) The group determination assumes that the batch unit operation is operating at the maximum design capacity of the TPPU for 12 months.

42. Section 63.1323 is amended by:

a. Revising paragraph (a)(1);

b. Revising paragraph (b) introductory text;

c. Revising paragraphs (b)(1) and (b)(2);

d. Revising paragraphs (b)(4)(i)(A) through (b)(4)(i)(C);

e. Revising paragraph (b)(4)(ii)(B)(*1*);

f. Revising paragraph (b)(5) introductory text;

g. Revising paragraph (b)(5)(ii);

h. Revising paragraph (b)(5)(iii) introductory text;

i. Revising paragraph (b)(5)(iv);

j. Revising paragraph (b)(5)(v) introductory text;

k. Revising paragraph (b)(5)(v)(A);

l. Revising paragraph (b)(6);

m. Revising paragraph (d);

n. Revising paragraph (e) introductory text;

o. Revising paragraph (e)(1) introductory text;

p. Revising paragraph (e)(1)(i);

q. Revising paragraph (e)(1)(iii);

r. Revising paragraphs (e)(2) and (e)(3);

s. Revising paragraph (g);

t. Revising paragraph (h)(1)(iii);

u. Revising paragraph (h)(2);

v. Revising paragraph (i);

w. Revising paragraph (j) introductory text;

x. Revising paragraph (j)(3); and

y. Adding paragraph (b)(9).

The revisions and additions read as follows:

§ 63.1323 Batch process vents—methods and procedures for group determination.

(a) * * *

(1) The procedures specified in paragraphs (b) through (g) of this section shall be followed to determine the group status of each batch process vent. This determination shall be made in accordance with either paragraph (a)(1)(i) or (a)(1)(ii) of this section.

(i) An owner or operator may choose to determine the group status of a batch process vent based on the expected mix of products. For each product, emission characteristics of the single highest-HAP recipe, as defined in paragraph (a)(1)(iii) of this section, for that product shall be

used in the procedures in paragraphs (b) through (i) of this section.

(ii) An owner or operator may choose to determine the group status of a batch process vent based on annualized production of the single highest-HAP recipe, as defined in paragraph (a)(1)(iii) of this section, considering all products produced or processed in the batch unit operation. The annualized production of the highest-HAP recipe shall be based exclusively on the production of the single highest-HAP recipe of all products produced or processed in the batch unit operation for a 12 month period. The production level used may be the actual production rate. It is not necessary to assume a maximum production rate (*i.e.*, 8,760 hours per year at maximum design production).

(iii) The single highest-HAP recipe for a product means the recipe of the product with the highest total mass of HAP charged to the reactor during the production of a single batch of product.

* * * * *

(b) *Determination of annual emissions.* The owner or operator shall calculate annual uncontrolled TOC or organic HAP emissions for each batch process vent using the methods described in paragraphs (b)(1) through (b)(8) of this section. To estimate emissions from a batch emissions episode, owners or operators may use either the emissions estimation equations in paragraphs (b)(1) through (b)(4) of this section, or direct measurement as specified in paragraph (b)(5) of this section. Engineering assessment may be used to estimate emissions from a batch emission episode only under the conditions described in paragraph (b)(6) of this section. In using the emissions estimation equations in paragraphs (b)(1) through (b)(4) of this section, individual component vapor pressure and molecular weight may be obtained from standard references. Methods to determine individual HAP partial pressures in multicomponent systems are described in paragraph (b)(9) of this section. Other variables in the emissions estimation equations may be obtained through direct measurement, as defined in paragraph (b)(5) of this section, through engineering assessment, as defined in paragraph (b)(6)(ii) of this section, by process knowledge, or by any other appropriate means. Assumptions used in determining these variables must be documented. Once emissions for the batch emission episode have been determined using either the emissions estimation equations, direct measurement, or engineering assessment, emissions from a batch cycle shall be calculated in accordance with paragraph (b)(7) of this section, and annual emissions from the batch process vent shall be calculated in accordance with paragraph (b)(8) of this section.

(1) TOC or organic HAP emissions from the purging of an empty vessel shall be calculated using Equation 2 of this subpart. Equation 2 of this subpart does not take into account evaporation of any residual liquid in the vessel.

$$E_{episode} = \frac{(V_{ves})(P)(MW_{wavg})}{RT}\left(1 - 0.37^{m}\right) \qquad \text{[Eq. 2]}$$

Where:

$E_{episode}$ = Emissions, kg/episode.

V_{ves} = Volume of vessel, m^3.

P = TOC or total organic HAP partial pressure, kPa.

MW_{wavg} = Weighted average molecular weight of TOC or organic HAP in vapor, determined in accordance with paragraph (b)(4)(i)(D) of this section, kg/kmol.

R = Ideal gas constant, 8.314 $m^3 \cdot kPa/kmol \cdot K$.

T = Temperature of vessel vapor space, K.

m = Number of volumes of purge gas used.

(2) TOC or organic HAP emissions from the purging of a filled vessel shall be calculated using Equation 3 of this subpart.

$$E_{episode} = \frac{(y)(V_{dr})\left(P^2\right)\left(MW_{wavg}\right)}{RT\left(P - \sum_{i=1}^{n} P_i x_i\right)}\left(T_m\right) \qquad \text{[Eq. 3]}$$

Where:

$E_{episode}$ = Emissions, kg/episode.

y = Saturated mole fraction of all TOC or organic HAP in vapor phase.

V_{dr} = Volumetric gas displacement rate, m^3/min.

P = Pressure in vessel vapor space, kPa.

MW_{wavg} = Weighted average molecular weight of TOC or organic HAP in vapor, determined in accordance with paragraph (b)(4)(i)(D) of this section, kg/kmol.

R = Ideal gas constant, 8.314 $m^3 \cdot kPa/kmol \cdot K$.

T = Temperature of vessel vapor space, K.

P_i = Vapor pressure of TOC or individual organic HAP i, kPa.

x_i = Mole fraction of TOC or organic HAP i in the liquid.

n = Number of organic HAP in stream. Note: Summation not applicable if TOC emissions are being estimated.

T_m = Minutes/episode.

* * * * *

(4) * * *

(i) * * *

(A) Emissions caused by heating of a vessel shall be calculated using Equation 5 of this subpart. The assumptions made for this calculation are atmospheric pressure of 760 millimeters of mercury (mm Hg) and the displaced gas is always saturated with volatile organic compounds (VOC) vapor in equilibrium with the liquid mixture.

$$E_{episode} = \left[\frac{\dfrac{\sum_{i=1}^{n}(P_i)_{T1}}{101.325 - \sum_{i=1}^{n}(P_i)_{T1}} + \dfrac{\sum_{i=1}^{n}(P_i)_{T2}}{101.325 - \sum_{i=1}^{n}(P_i)_{T2}}}{2} \right] * (\Delta\eta) \left[\frac{(MW_{WAVG,T1}) + (MW_{WAVG,T2})}{2} \right] \quad \text{[Eq. 5]}$$

Where:

$E_{episode}$ = Emissions, kg/episode.

$(P_i)_{T1}$, $(P_i)_{T2}$ = Partial pressure (kPa) of TOC or each organic HAP i in the vessel headspace at initial (T1) and final (T2) temperature.

n = Number of organic HAP in stream. Note: Summation not applicable if TOC emissions are being estimated.

$\Delta\eta$ = Number of kilogram-moles (kg-moles) of gas displaced, determined in accordance with paragraph (b)(4)(i)(B) of this section.

101.325 = Constant, kPa.

$(MW_{WAVG,T1})$, $(MW_{WAVG,T2})$ = Weighted average molecular weight of TOC or total organic HAP in the displaced gas stream, determined in accordance with paragraph (b)(4)(i)(D) of this section, kg/kmol.

(B) The moles of gas displaced, $\Delta\eta$, is calculated using Equation 6 of this subpart.

$$\Delta\eta = \frac{V_{fs}}{R}\left[\left(\frac{Pa_1}{T_1}\right) - \left(\frac{Pa_2}{T_2}\right)\right] \quad \text{[Eq. 6]}$$

Where:

$\Delta\eta$ = Number of kg-moles of gas displaced.

V_{fs} = Volume of free space in the vessel, m^3.

R = Ideal gas constant, 8.314 $m^3 \cdot kPa/kmol \cdot K$.

Pa_1 = Initial noncondensible gas partial pressure in the vessel, kPa.

Pa_2 = Final noncondensible gas partial pressure, kPa.

T_1 = Initial temperature of vessel, K.

T_2 = Final temperature of vessel, K.

(C) The initial and final pressure of the noncondensible gas in the vessel shall be calculated using Equation 7 of this subpart.

$$Pa = 101.325 - \sum_{i=1}^{n}(P_i)_T \quad \text{[Eq. 7]}$$

Where:

Pa = Initial or final partial pressure of noncondensible gas in the vessel headspace, kPa.

101.325 = Constant, kPa.

$(P_i)T$ = Partial pressure of TOC or each organic HAP i in the vessel headspace, kPa, at the initial or final temperature (T1 or T2).

n = Number of organic HAP in stream. Note: Summation not applicable if TOC emissions are being estimated.

* * * * *

(ii) * * *

(B) * * *

(*1*) If the final temperature of the heatup is at or lower than 5 K below the boiling point, the final temperature for the last increment shall be the final temperature for the heatup, even if the last increment is less than 5 K.

* * * * *

(5) The owner or operator may estimate annual emissions for a batch emission episode by direct measurement. If direct measurement is used, the owner or operator shall either perform a test for the duration of a representative batch emission episode or perform a test during only those periods of the batch emission episode for which the emission rate for the entire episode can be determined or for which the emissions are greater than the average emission rate of the batch emission episode. The owner or operator choosing either of these options shall develop an emission profile for the entire batch emission episode, based on either process knowledge or test data collected, to demonstrate that test periods are representative. Examples of information that could constitute process knowledge include calculations based on material balances and process stoichiometry. Previous test results may be used provided the results are still relevant to the current batch process vent conditions. Performance tests shall follow the procedures specified in paragraphs (b)(5)(i) through (b)(5)(iii) of this section. The procedures in either paragraph (b)(5)(iv) or (b)(5)(v) of this section shall be used to calculate the emissions per batch emission episode.

* * * * *

(ii) Annual average batch vent flow rate shall be determined as specified in paragraph (e) of this section.

(iii) Method 18 or Method 25A, 40 CFR part 60, appendix A, shall be used to determine the concentration of TOC or organic HAP, as appropriate. Alternatively, any other method or data that has been validated according to the applicable procedures in Method 301 of appendix A of this part may be used. The use of Method 25A, 40 CFR part 60, appendix A shall conform with the requirements in paragraphs (b)(5)(iii)(A) and (b)(5)(iii)(B) of this section.

* * * * *

(iv) If an integrated sample is taken over the entire batch emission episode to determine the average batch vent concentration of TOC or total organic HAP, emissions shall be calculated using Equation 9 of this subpart.

$$E_{episode} = K\left[\sum_{j=1}^{n}(C_j)(M_j)\right] AFR\,(T_h) \quad \text{[Eq. 9]}$$

Where:

$E_{episode}$ = Emissions, kg/episode.

K = Constant, 2.494×10^{-6} $(ppmv)^{-1}$ (gm-mole/scm) (kg/gm) (min/hr), where standard temperature is 20 °C.

C_j = Average batch vent concentration of TOC or sample organic HAP component j of the gas stream, dry basis, ppmv.

M_j = Molecular weight of TOC or sample organic HAP component j of the gas stream, gm/gm-mole.

AFR = Average batch vent flow rate of gas stream, dry basis, scmm.

T_h = Hours/episode

n = Number of organic HAP in stream. Note: Summation not applicable if TOC emissions are being estimated using a TOC concentration measured using Method 25A, 40 CFR part 60, appendix A.

(v) If grab samples are taken to determine the average batch vent concentration of TOC or total organic HAP, emissions shall be calculated according to paragraphs (b)(5)(v)(A) and (b)(5)(v)(B) of this section.

(A) For each measurement point, the emission rate shall be calculated using Equation 10 of this subpart.

$$E_{point} = K\left[\sum_{j=1}^{n} C_j M_j\right]FR \qquad \text{[Eq. 10]}$$

Where:

E_{point} = Emission rate for individual measurement point, kg/hr.

K = Constant, 2.494×10^{-6} $(ppmv)^{-1}$ (gm-mole/scm) (kg/gm) (min/hr), where standard temperature is 20 °C.

C_j = Concentration of TOC or sample organic HAP component j of the gas stream, dry basis, ppmv.

M_j = Molecular weight of TOC or sample organic HAP component j of the gas stream, gm/gm-mole.

FR = Flow rate of gas stream for the measurement point, dry basis, scmm.

n = Number of organic HAP in stream. Note: Summation not applicable if TOC emissions are being estimated using a TOC concentration measured using Method 25A, 40 CFR part 60, appendix A.

* * * * *

(6) Engineering assessment may be used to estimate emissions from a batch emission episode, if the criteria in paragraph (b)(6)(i) are met. Data or other information used to demonstrate that the criteria in paragraph (b)(6)(i) of this section have been met shall be reported as specified in paragraph (b)(6)(iii) of this section. Paragraph (b)(6)(ii) of this section defines engineering assessment, for the purposes of estimating emissions from a batch emissions episode. All data, assumptions, and procedures used in an engineering assessment shall be documented.

(i) If the criteria specified in paragraph (b)(6)(i)(A), (B), or (C) are met for a specific batch emission episode, the owner or operator may use engineering assessment, as described in paragraph (b)(6)(ii) of this section, to estimate emissions from that batch emission episode, and the owner or operator is not required to use the emissions estimation equations described in paragraphs (b)(1) through (b)(4) of this section to estimate emissions from that batch emission episode.

(A) Previous test data, where the measurement of organic HAP or TOC emissions was an outcome of the test, show a greater than 20 percent discrepancy between the test value and the value estimated using the applicable equations in paragraphs (b)(1) through (b)(4) of this section. Paragraphs (b)(6)(i)(A)(*1*) and (*2*) of this section describe test data that will be acceptable under this paragraph (b)(6)(i)(A).

(*1*) Test data for the batch emission episode obtained during production of the product for which the demonstration is being made.

(*2*) Test data obtained for a batch emission episode from another process train, where the test data were obtained during production of the product for which the demonstration is being made. Test data from another process train may be used only if the owner or operator can demonstrate that the data are representative of the batch emission episode for which the demonstration is being made, taking into account the nature, size, operating conditions, production rate, and sequence of process steps (*e.g.*, reaction, distillation, etc.) of the equipment in the other process train.

(B) Previous test data obtained during the production of the product for which the demonstration is being made, for the batch emission episode with the highest organic HAP emissions on a mass basis, show a greater than 20 percent discrepancy between the test value and the value estimated using the applicable equations in paragraphs (b)(1) through (b)(4) of this section. If the criteria in this paragraph (b)(6)(i)(B) are met, then engineering assessment may be used for all batch emission episodes associated with that batch cycle for the batch unit operation.

(C) The owner or operator has requested and been granted approval to use engineering assessment to estimate emissions from a batch emissions episode. The request to use engineering assessment to estimate emissions from a batch emissions episode shall contain sufficient information and data to demonstrate to the Administrator that engineering assessment is an accurate means of estimating emissions for that particular batch emissions episode. The request to use engineering assessment to estimate emissions for a batch emissions episode shall be submitted in the Precompliance Report required under § 63.506(e)(3).

(ii) Engineering assessment includes, but is not limited to, the following:

(A) Previous test results, provided the tests are representative of current operating practices;

(B) Bench-scale or pilot-scale test data obtained under conditions representative of current process operating conditions;

(C) Flow rate, TOC emission rate, or organic HAP emission rate specified or implied within a permit limit applicable to the batch process vent; and

(D) Design analysis based on accepted chemical engineering principles, measurable process parameters, or physical or chemical laws or properties. Examples of analytical methods include, but are not limited to:

(*1*) Use of material balances;

(*2*) Estimation of flow rate based on physical equipment design such as pump or blower capacities;

(*3*) Estimation of TOC or organic HAP concentrations based on saturation conditions; and

(*4*) Estimation of TOC or organic HAP concentrations based on grab samples of the liquid or vapor.

(iii) Data or other information used to demonstrate that the criteria in paragraph (b)(6)(i) of this section have been met shall be reported as specified in paragraphs (b)(6)(iii)(A) and (b)(6)(iii)(B) of this section.

(A) Data or other information used to demonstrate that the criteria in paragraph (b)(6)(i)(A) or (b)(6)(i)(B) of this section have been met shall be reported in the Notification of Compliance Status, as required in § 63.1327(a)(6).

(B) The request for approval to use engineering assessment to estimate emissions from a batch emissions episode as allowed under paragraph (b)(6)(i)(C) of this section, and sufficient data or other information for demonstrating to the Administrator that engineering assessment is an accurate means of estimating emissions for that particular batch emissions episode shall be submitted with the Precompliance Report, as required in § 63.1335(e)(3).

* * * * *

(9) Individual HAP partial pressures in multicomponent systems shall be determined using the appropriate method specified in paragraphs (b)(9)(i) through (b)(9)(iii) of this section.

(i) If the components are miscible, use Raoult's law to calculate the partial pressures;

(ii) If the solution is a dilute aqueous mixture, use Henry's law constants to calculate partial pressures;

(iii) If Raoult's law or Henry's law are not appropriate or available, the owner or operator may use any of the options in paragraphs (b)(9)(iii)(A), (B), or (C) of this section.

(A) Experimentally obtained activity coefficients, Henry's law constants, or solubility data;

(B) Models, such as group-contribution models, to predict activity coefficients; or

(C) Assume the components of the system behave independently and use the summation of all vapor pressures from the HAPs as the total HAP partial pressure.

* * * * *

(d) *Minimum emission level exemption.* A batch process vent with annual emissions of TOC or organic HAP less than 11,800 kg/yr is considered a Group 2 batch process vent and the owner or operator of said batch process vent shall comply with the requirements in § 63.1322(f) or (g). Annual emissions of TOC or organic HAP are determined at the exit of the batch unit operation, as described in paragraph (a)(2) of this section, and are determined as specified in paragraph (b) of this section. The owner or operator of said batch process vent is not required to comply with the provisions in paragraphs (e) through (g) of this section.

(e) *Determination of average batch vent flow rate and annual average batch vent flow rate.* The owner or operator shall determine the average batch vent flow rate for each batch emission episode in accordance with one of the procedures provided in paragraphs (e)(1) through (e)(2) of this section. The annual average batch vent flow rate for a batch process vent shall be calculated as specified in paragraph (e)(3) of this section.

(1) Determination of the average batch vent flow rate for a batch emission episode by direct measurement shall be made using the procedures specified in paragraphs (e)(1)(i) through (e)(1)(iii) of this section.

(i) The volumetric flow rate (FR_i) for a batch emission episode, in standard cubic meters per minute (scmm) at 20°C, shall be determined using Method 2, 2A, 2C, or 2D, 40 CFR part 60, appendix A, as appropriate.

* * * * *

(iii) The average batch vent flow rate for a batch emission episode shall be calculated using Equation 14 of this subpart.

$$AFR_{episode} = \frac{\sum_{i=1}^{n} FR_i}{n} \qquad \text{[Eq. 14]}$$

Where:

$AFR_{episode}$ = Average batch vent flow rate for the batch emission episode, scmm.

FR_i = Flow rate for individual measurement i, scmm.

n = Number of flow rate measurements taken during the batch emission episode.

(2) The average batch vent flow rate for a batch emission episode may be determined by engineering assessment, as defined in paragraph (b)(6)(i) of this section. All data, assumptions, and procedures used shall be documented.

(3) The annual average batch vent flow rate for a batch process vent shall be calculated using Equation 15 of this subpart.

$$AFR = \frac{\sum_{i=1}^{n} (DUR_i)(AFR_{episode,i})}{\sum_{i=1}^{n} (DUR_i)} \qquad \text{[Eq. 15]}$$

Where:

AFR = Annual average batch vent flow rate for the batch process vent, scmm.

DUR_i = Duration of type i batch emission episodes annually, hrs/yr.

$AFR_{episode,i}$ = Average batch vent flow rate for type i batch emission episode, scmm.

n = Number of types of batch emission episodes venting from the batch process vent.

* * * * *

(g) *Group 1/Group 2 status determination.* The owner or operator shall compare the cutoff flow rate, calculated in accordance with paragraph (f) of this section, with the annual average batch vent flow rate, determined in accordance with paragraph (e)(3) of this section. The group determination status for each batch process vent shall be made using the criteria specified in paragraphs (g)(1) and (g)(2) of this section.

(1) If the cutoff flow rate is greater than or equal to the annual average batch vent flow rate of the stream, the batch process vent is classified as a Group 1 batch process vent.

(2) If the cutoff flow rate is less than the annual average batch vent flow rate of the stream, the batch process vent is classified as a Group 2 batch process vent.

(h) * * *

(1) * * *

(iii) Average concentration of organic compounds containing halogens and hydrogen halides as measured by Method 26 or 26A, 40 CFR part 60, appendix A.

* * * * *

(2) The annual mass emissions of halogen atoms for a batch process vent shall be calculated using Equation 17 of this subpart.

$$E_{halogen} = K\left[\sum_{j=1}^{n}\sum_{i=1}^{m}(C_{avg_j})(L_{j,i})(M_{j,i})\right]AFR \qquad \text{[Eq. 17]}$$

Where:

$E_{halogen}$ = Mass of halogen atoms, dry basis, kg/yr.

K = Constant, 0.022 $(ppmv)^{-1}$ (kg-mole per scm) (minute/yr), where standard temperature is 20 °C.

AFR = Annual average batch vent flow rate of the batch process vent, determined according to paragraph (e) of this section, scmm.

$M_{j,i}$ = Molecular weight of halogen atom i in compound j, kg/kg-mole.

$L_{j,i}$ = Number of atoms of halogen i in compound j.

n = Number of halogenated compounds j in the batch process vent.

m = Number of different halogens i in each compound j of the batch process vent.

C_{avg_j} = Annual average batch vent concentration of halogenated compound j in the batch process vent as determined by using Equation 18 of this subpart, dry basis, ppmv.

$$C_{avg_j} = \frac{\sum_{i=1}^{n}(DUR_i)(C_i)}{\sum_{i=1}^{n}(DUR_i)} \quad \text{[Eq. 18]}$$

Where:

DUR_i = Duration of type i batch emission episodes annually, hrs/yr.

C_i = Average batch vent concentration of halogenated compound j in type i batch emission episode, ppmv.

n = Number of types of batch emission episodes venting from the batch process vent.

* * * * *

(i) *Process changes affecting Group 2 batch process vents.* Whenever process changes, as described in paragraph (i)(1) of this section, are made that affect one or more Group 2 batch process vents and that could reasonably be expected to change one or more Group 2 batch process vents to Group 1 batch process vents or that could reasonably be expected to reduce the batch mass input limitation for one or more Group 2 batch process vents, the owner or operator shall comply with paragraphs (i)(2) and (3) of this section.

(1) Examples of process changes include the changes listed in paragraphs (i)(1)(i), (i)(1)(ii), and (i)(1)(iii) of this section.

(i) For all batch process vents, examples of process changes include, but are not limited to, changes in feedstock type or catalyst type; or whenever there is replacement, removal, or modification of recovery equipment considered part of the batch unit operation as specified in paragraph (a)(2) of this section; or increases in production capacity or production rate. For purposes of this paragraph (i), process changes do not include: Process upsets; unintentional, temporary process changes; and changes that are within the margin of variation on which the original group determination was based.

(ii) For Group 2 batch process vents where the group determination and batch mass input limitation are based on the expected mix of products, the situations described in paragraphs (i)(1)(ii)(A) and (B) of this section shall be considered to be process changes.

(A) The production of combinations of products not considered in establishing the batch mass input limitation.

(B) The production of a recipe of a product with a total mass of HAP charged to the reactor during the production of a single batch of product that is higher than the total mass of HAP for the recipe used as the single highest-HAP recipe for that product in the batch mass input limitation determination.

(iii) For Group 2 batch process vents where the group determination and batch mass input limitation are based on the single highest-HAP recipe (considering all products produced or processed in the batch unit operation), the production of a recipe having a total mass of HAP charged to the reactor (during the production of a single batch of product) that is higher than the total mass of HAP for the highest-HAP recipe used in the batch mass input limitation determination shall be considered to be a process change.

(2) For each batch process vent affected by a process change, the owner or operator shall redetermine the group status by repeating the procedures specified in paragraphs (b) through (g) of this section, as applicable; alternatively, engineering assessment, as described in paragraph (b)(6)(i) of this section, may be used to determine the effects of the process change.

(3) Based on the results from paragraph (i)(2) of this section, owners or operators of affected sources shall comply with either paragraph (i)(3)(i), (ii), or (iii) of this section.

(i) If the group redetermination described in paragraph (i)(2) of this section indicates that a Group 2 batch process vent has become a Group 1 batch process vent as a result of the process change, the owner or operator shall submit a report as specified in § 63.1327(b) and shall comply with the Group 1 provisions in §§ 63.1322 through 63.1327 in accordance with § 63.1310(i)(2)(ii) or (i)(2)(iii), as applicable.

(ii) If the redetermination described in paragraph (i)(2) of this section indicates that a Group 2 batch process vent with annual emissions less than the level specified in paragraph (d) of this section, that is in compliance with § 63.1322(g), now has annual emissions greater than or equal to the level specified in paragraph (d) of this section but remains a Group 2 batch process vent, the owner or operator shall comply with the provisions in paragraphs (i)(3)(ii)(A) through (C) of this section.

(A) Redetermine the batch mass input limitation;

(B) Submit a report as specified in § 63.1327(c); and

(C) Comply with § 63.1322(f), beginning with the year following the submittal of the report submitted according to paragraph (i)(3)(ii)(B) of this section.

(iii) If the group redetermination described in paragraph (i)(2) of this section indicates no change in group status or no change in the relation of annual emissions to the levels specified in paragraph (d) of this section, the owner or operator shall comply with paragraphs (i)(3)(iii)(A) and (i)(3)(iii)(B) of this section.

(A) The owner or operator shall redetermine the batch mass input limitation; and

(B) The owner or operator shall submit the new batch mass input limitation in accordance with § 63.1327(c).

(j) *Process changes to new SAN affected sources using a batch process.* Whenever process changes, as described in paragraph (j)(1) of this section, are made to a new affected source producing SAN using a batch process that could reasonably be expected to adversely impact the compliance status (*i.e.*, achievement of 84 percent emission reduction) of the affected source, the owner or operator shall comply with paragraphs (j)(2) and (3) of this section.

* * * * *

(3) Where the redetermined percent reduction is less than 84 percent, the owner or operator of the affected source shall submit a report as specified in § 63.1327(d) and shall comply with § 63.1322(a)(3) and all associated provisions in accordance with § 63.1310(i).

43. Section 63.1324 is amended by:

a. Revising the section title;

b. Revising paragraph (a) introductory text;

c. Revising paragraph (a)(2);

d. Revising paragraph (c) introductory text;

e. Revising paragraph (c)(4)(ii);

f. Revising paragraph (c)(7);

g. Revising paragraph (d) introductory text;

h. Revising paragraph (e) introductory text;

i. Revising paragraph (e)(2);

j. Revising paragraph (f)(1) introductory text;

k. Revising paragraph (f)(1)(ii);

l. Revising paragraph (f)(3); and

m. Removing paragraph (e)(3).

The revisions read as follows:

§ 63.1324 Batch process vents—monitoring equipment.

(a) *General requirements.* Each owner or operator of a batch process vent or aggregate batch vent stream that uses a control device to comply with the requirements in § 63.1322(a) or

§ 63.1322(b), shall install the monitoring equipment specified in paragraph (c) of this section. All monitoring equipment shall be installed, calibrated, maintained, and operated according to manufacturer's specifications or other written procedures that provide adequate assurance that the equipment would reasonably be expected to monitor accurately.

* * * * *

(2) Except as otherwise provided in this subpart, the owner or operator shall operate control devices such that the daily average of monitored parameters, established as specified in paragraph (f) of this section, remains above the minimum level or below the maximum level, as appropriate.

* * * * *

(c) *Batch process vent and aggregate batch vent stream monitoring equipment.* The monitoring equipment specified in paragraphs (c)(1) through (c)(8) of this section shall be installed as specified in paragraph (a) of this section. The parameters to be monitored are specified in Table 7 of this subpart.

* * * * *

(4) * * *

(ii) A flow measurement device equipped with a continuous recorder shall be located at the scrubber influent for liquid flow. Gas stream flow shall be determined using one of the procedures specified in paragraphs (c)(4)(ii)(A) through (c)(4)(ii)(C) of this section.

(A) The owner or operator may determine gas stream flow using the design blower capacity, with appropriate adjustments for pressure drop.

(B) If the scrubber is subject to regulations in 40 CFR parts 264 through 266 that have required a determination of the liquid to gas (L/G) ratio prior to the applicable compliance date for this subpart, the owner or operator may determine gas stream flow by the method that had been utilized to comply with those regulations. A determination that was conducted prior to the compliance date for this subpart may be utilized to comply with this subpart if it is still representative.

(C) The owner or operator may prepare and implement a gas stream flow determination plan that documents an appropriate method which will be used to determine the gas stream flow. The plan shall require determination of gas stream flow by a method which will at least provide a value for either a representative or the highest gas stream flow anticipated in the scrubber during representative operating conditions other than start-ups, shutdowns, or malfunctions. The plan shall include a description of the methodology to be followed and an explanation of how the selected methodology will reliably determine the gas stream flow, and a description of the records that will be maintained to document the determination of gas stream flow. The owner or operator shall maintain the plan as specified in § 63.1335(a).

* * * * *

(7) Where a carbon adsorber is used, an integrating regeneration steam flow or nitrogen flow, or pressure monitoring device having an accuracy of ±10 percent of the flow rate, level, or pressure, or better, capable of recording the total regeneration steam flow or nitrogen flow, or pressure (gauge or absolute) for each regeneration cycle; and a carbon bed temperature monitoring device, capable of recording the carbon bed temperature after each regeneration and within 15 minutes of completing any cooling cycle are required.

* * * * *

(d) *Alternative monitoring parameters.* An owner or operator of a batch process vent or aggregate batch vent stream may request approval to monitor parameters other than those required by paragraph (c) of this section. The request shall be submitted according to the procedures specified in § 63.1327(f) and § 63.1335(f). Approval shall be requested if the owner or operator:

* * * * *

(e) *Monitoring of bypass lines.* Owners or operators of a batch process vent or aggregate batch vent stream using a vent system that contains bypass lines that could divert emissions away from a control device used to comply with § 63.1322(a) or § 63.1322(b) shall comply with either paragraph (e)(1) or (e)(2) of this section. Equipment such as low leg drains, high point bleeds, analyzer vents, open-ended valves or lines, and pressure relief valves needed for safety purposes are not subject to this paragraph (e).

* * * * *

(2) Secure the bypass line damper or valve in the non-diverting position with a car-seal or a lock-and-key type configuration. A visual inspection of the seal or closure mechanism shall be performed at least once every month to ensure that the damper or valve is maintained in the non-diverting position and emissions are not diverted through the bypass line. Records shall be generated as specified in § 63.1326(e)(4).

(f)* * *

(1) For each parameter monitored under paragraph (c) or (d) of this section, the owner or operator shall establish a level, defined as either a maximum or minimum operating parameter as denoted in Table 8 of this subpart, that indicates proper operation of the control device. The level shall be established in accordance with the procedures specified in § 63.1334. The level may be based upon a prior performance test conducted for determining compliance with a regulation promulgated by EPA, and the owner or operator is not required to conduct a performance test under § 63.1325, provided that the prior performance test meets the conditions of § 63.1325(b)(3).

* * * * *

(ii) For aggregate batch vent streams using a control device to comply with § 63.1322(b)(2), the established level shall reflect the applicable emission reduction requirement specified in § 63.1322(b)(2).

* * * * *

(3) The operating day shall be defined as part of establishing the parameter monitoring level and shall be submitted with the information in paragraph (f)(2) of this section. The definition of operating day shall specify the time(s) at which an operating day begins and ends. The operating day shall not exceed 24 hours.

* * * * *

44. Section 63.1325 is amended by:

a. Revising paragraph (a);

b. Revising paragraph (b) introductory text;

c. Revising paragraph (b)(3);

d. Revising paragraph (b)(5);

e. Revising paragraph (c) introductory text;

f. Revising paragraph (c)(1)(i)(A);

g. Revising paragraph (c)(1)(i)(B) introductory text;

h. Revising paragraph (c)(1)(i)(C);

i. Revising paragraph (c)(1)(i)(D) introductory text;

j. Revising paragraph (c)(1)(ii);

k. Revising paragraph (c)(1)(iii) introductory text;

l. Revising paragraph (c)(1)(iii)(A);

m. Revising paragraph (c)(1)(v);

n. Revising paragraph (c)(2) introductory text;

o. Revising paragraph (d)(1);

p. Revising paragraph (d)(2)(ii);

q. Revising paragraphs (d)(3) and (d)(4);

r. Revising paragraph (e);

s. Revising paragraph (g); and

t. Removing paragraph (b)(6).

The revisions read as follows:

§ 63.1325 Batch process vents—performance test methods and procedures to determine compliance.

(a) *Use of a flare.* When a flare is used to comply with § 63.1322(a)(1),

§ 63.1322(a)(3), § 63.1322(b)(1), or § 63.1322(b)(3), the owner or operator of an affected source shall comply with § 63.1333(e).

(b) *Exceptions to performance tests.* An owner or operator is not required to conduct a performance test when a control device specified in paragraphs (b)(1) through (b)(5) of this section is used to comply with § 63.1322(a)(2) or (a)(3).

* * * * *

(3) A control device for which a performance test was conducted for determining compliance with a regulation promulgated by the EPA and the test was conducted using the same Methods specified in this section and either no deliberate process changes have been made since the test, or the owner or operator can demonstrate that the results of the performance test, with or without adjustments, reliably demonstrate compliance despite process changes. Recovery devices used for controlling emissions from continuous process vents complying with § 63.1322(a)(3) are also eligible for the exemption described in this paragraph (b)(3).

* * * * *

(5) A hazardous waste incinerator for which the owner or operator has been issued a final permit under 40 CFR part 270 and complies with the requirements of 40 CFR part 264, subpart O, or has certified compliance with the interim status requirements of 40 CFR part 265, subpart O.

(c) *Batch process vent testing and procedures for compliance with § 63.1322(a)(2).* Except as provided in paragraph (a) or (b) of this section, an owner or operator using a control device to comply with § 63.1322(a)(2) shall conduct a performance test using the procedures specified in paragraph (c)(1) of this section in order to determine the control efficiency of the control device. An owner or operator shall determine the percent reduction for the batch cycle using the control efficiency of the control device as specified in paragraphs (c)(2)(i) through (c)(2)(iii) of this section and the procedures specified in paragraph (c)(2) of this section. Compliance may be based on either total organic HAP or TOC. For purposes of this paragraph (c), the term "batch emission episode" shall have the meaning "period of the batch emission episode selected for control," which may be the entire batch emission episode or may only be a portion of the batch emission episode.

(1)* * *

(i) * * *

(A) Alternatively, an owner or operator may choose to test only those periods of the batch emission episode during which the emission rate for the entire episode can be determined or during which the emissions are greater than the average emission rate of the batch emission episode. The owner or operator choosing either of these options shall develop an emission profile for the entire batch emission episode, based on either process knowledge or test data collected, to demonstrate that test periods are representative. Examples of information that could constitute process knowledge include calculations based on material balances and process stoichiometry. Previous test results may be used provided the results are still relevant to the current batch process vent conditions.

(B) Method 1 or 1A, 40 CFR part 60, appendix A, as appropriate, shall be used for selection of the sampling sites if the flow measuring device is a pitot tube, except that references to particulate matter in Method 1A do not apply for the purposes of this subpart. No traverse is necessary when Method 2A or 2D, 40 CFR part 60, appendix A is used to determine gas stream volumetric flow rate. Inlet sampling sites shall be located as specified in paragraphs (c)(1)(i)(B)(*1*) and (c)(1)(i)(B)(*2*) of this section. Outlet sampling sites shall be located at the outlet of the control device prior to release to the atmosphere.

* * * * *

(C) Gas stream volumetric flow rate and/or average batch vent flow rate shall be determined as specified in § 63.1323(e).

(D) Method 18 or Method 25A, 40 CFR part 60, appendix A shall be used to determine the concentration of organic HAP or TOC, as appropriate. Alternatively, any other method or data that has been validated according to the applicable procedures in Method 301 of appendix A of this part may be used. The use of Method 25A, 40 CFR part 60, appendix A shall conform with the requirements in paragraphs (c)(1)(i)(D)(*1*) and (c)(1)(i)(D)(*2*) of this section.

* * * * *

(ii) If an integrated sample is taken over the entire test period to determine average batch vent concentration of TOC or total organic HAP, emissions per batch emission episode shall be calculated using Equations 19 and 20 of this subpart.

$$E_{episode,inlet} = K\left[\sum_{j=1}^{n}\left(C_{j,inlet}\right)\left(M_j\right)\right]\left(AFR_{inlet}\right)\left(T_h\right) \qquad \text{[Eq. 19]}$$

$$E_{episode,outlet} = K\left[\sum_{j=1}^{n}\left(C_{j,outlet}\right)\left(M_j\right)\right]\left(AFR_{outlet}\right)\left(T_h\right) \qquad \text{[Eq. 20]}$$

Where:

$E_{episode}$=Inlet or outlet emissions, kg/episode.

K=Constant, 2.494×10^{-6} $(ppmv)^{-1}$ (gm-mole/scm) (kg/gm) (min/hr), where standard temperature is 20 °C.

C_j=Average inlet or outlet concentration of TOC or sample organic HAP component j of the gas stream for the batch emission episode, dry basis, ppmv.

M_j=Molecular weight of TOC or sample organic HAP component j of the gas stream, gm/gm-mole.

AFR = Average inlet or outlet flow rate of gas stream for the batch emission episode, dry basis, scmm.

T_h=Hours/episode.

n=Number of organic HAP in stream. Note: Summation is not applicable if TOC emissions are being estimated using a TOC concentration measured using Method 25A, 40 CFR part 60, appendix A.

(iii) If grab samples are taken to determine average batch vent concentration of TOC or total organic HAP, emissions shall be calculated according to paragraphs (c)(1)(iii)(A) and (B) of this section.

(A) For each measurement point, the emission rates shall be calculated using Equations 21 and 22 of this subpart.

$$E_{point,inlet} = K\left[\sum_{j=1}^{n} C_j M_j\right] FR_{inlet} \qquad \text{[Eq. 21]}$$

$$E_{point,outlet} = K\left[\sum_{j=1}^{n} C_j M_j\right] FR_{outlet} \qquad \text{[Eq. 22]}$$

Where:

E_{point}=Inlet or outlet emission rate for the measurement point, kg/hr.

K=Constant, 2.494×10^{-6} $(ppmv)^{-1}$ (gm-mole/scm) (kg/gm) (min/hr), where standard temperature is 20 minus;oC.

C_j=Inlet or outlet concentration of TOC or sample organic HAP component j of the gas stream, dry basis, ppmv.

M_j=Molecular weight of TOC or sample organic HAP component j of the gas stream, gm/gm-mole.

FR=Inlet or outlet flow rate of gas stream for the measurement point, dry basis, scmm.

n=Number of organic HAP in stream.

Note: Summation is not applicable if TOC emissions are being estimated using a TOC concentration measured using Method 25A, 40 CFR part 60, appendix A.

* * * * *

(v) If the batch process vent entering a boiler or process heater with a design capacity less than 44 megawatts is introduced with the combustion air or as a secondary fuel, the weight-percent reduction of total organic HAP or TOC across the device shall be determined by comparing the TOC or total organic HAP in all combusted batch process vents and primary and secondary fuels with the TOC or total organic HAP, respectively, exiting the combustion device.

(2) The percent reduction for the batch cycle shall be determined using Equation 26 of this subpart and the control device efficiencies specified in paragraphs (c)(2)(i) through (c)(2)(iii) of this section. All information used to calculate the batch cycle percent reduction, including a definition of the batch cycle identifying all batch emission episodes, shall be recorded as specified in § 63.1326(b)(2). This information shall include identification of those batch emission episodes, or portions thereof, selected for control.

$$PR = \frac{\sum_{i=1}^{n} E_{unc} + \sum_{i=1}^{n} E_{inlet,con} - \sum_{i=1}^{n} (1-R) E_{inlet,con}}{\sum_{i=1}^{n} E_{unc} + \sum_{i=1}^{n} E_{inlet,con}} (100) \qquad \text{[Eq. 26]}$$

Where:

PR = Percent reduction

E_{unc} = Mass rate of TOC or total organic HAP for uncontrolled batch emission episode i, kg/hr.

$E_{inlet,con}$ = Mass rate of TOC or total organic HAP for controlled batch emission episode i at the inlet to the control device, kg/hr.

R = Control efficiency of control device as specified in paragraphs (c)(2)(i) through (c)(2)(iii) of this section.

n = Number of uncontrolled batch emission episodes, controlled batch emission episodes, and control devices. The value of n is not necessarily the same for these three items.

* * * * *

(d) * * *

(1) Sampling sites shall be located at the inlet and outlet of the scrubber or other halogen reduction device used to reduce halogen emissions in complying with § 63.1322(c)(1) or at the outlet of the halogen reduction device used to reduce halogen emissions in complying with § 63.1322(c)(2).

(2) * * *

(ii) Gas stream volumetric flow rate and/or average batch vent flow rate shall be determined as specified in § 63.1323(e).

(3) To determine compliance with the percent reduction specified in § 63.1322(c)(1), the mass emissions for any hydrogen halides and halogens present at the inlet of the scrubber or other halogen reduction device shall be summed together. The mass emissions of any hydrogen halides or halogens present at the outlet of the scrubber or other halogen reduction device shall be summed together. Percent reduction shall be determined by subtracting the outlet mass emissions from the inlet mass emissions and then dividing the result by the inlet mass emissions and multiplying by 100.

(4) To determine compliance with the emission limit specified in § 63.1322(c)(2), the annual mass emissions for any hydrogen halides and halogens present at the outlet of the halogen reduction device and prior to any combustion device shall be summed together and compared to the emission limit specified in § 63.1322(c)(2).

* * * * *

(e) *Aggregate batch vent stream testing for compliance with § 63.1322(b)(2) or (b)(3).* Except as specified in paragraphs (e)(1) through (e)(3) of this section, owners or operators of aggregate batch vent streams complying with § 63.1322(b)(2) or (b)(3) shall conduct a performance test using the performance testing procedures for continuous process vents in § 63.116(c).

(1) For purposes of this subpart, when the provisions of § 63.116(c) specify that Method 18, 40 CFR part 60, appendix A, shall be used, Method 18 or Method 25A, 40 CFR part 60, appendix A, may be used. The use of Method 25A, 40

CFR part 60, appendix A, shall conform with the requirements in paragraphs (e)(1)(i) and (e)(1)(ii) of this section.

(i) The organic HAP used as the calibration gas for Method 25A, 40 CFR part 60, appendix A, shall be the single organic HAP representing the largest percent by volume of the emissions.

(ii) The use of Method 25A, 40 CFR part 60, appendix A, is acceptable if the response from the high-level calibration gas is at least 20 times the standard deviation of the response from the zero calibration gas when the instrument is zeroed on the most sensitive scale.

(2) When § 63.116(c)(4) refers to complying with an emission reduction of 98 percent, for purposes of this subpart, the 90 percent reduction requirement specified in § 63.1322(b)(2) shall apply.

* * * * *

(g) *Batch mass input limitation.* The batch mass input limitation required by § 63.1322(g)(1) shall be determined by the owner or operator such that annual emissions for the batch process vent remain less than the level specified in § 63.1323(d). The batch mass input limitation required by § 63.1322(f)(1) shall be determined by the owner or operator such that annual emissions remain at a level that ensures that said batch process vent remains a Group 2 batch process vent, given the actual annual flow rate for said batch process vent determined according to the procedures specified in § 63.1323(e)(3). The batch mass input limitation shall be determined using the same basis, as described in § 63.1323(a)(1), used to make the group determination (*i.e.*, expected mix of products or highest-HAP recipe.) The establishment of the batch mass input limitation is not dependent upon any past production or activity level.

(1) If the expected mix of products serves as the basis for the batch mass input limitation, the batch mass input limitation shall be determined based on any foreseeable combination of products that the owner or operator expects to manufacture.

(2) If the single highest-HAP recipe serves as the basis for the batch mass input limitation, the batch mass input limitation shall be determined based solely on the production of the single highest-HAP recipe, considering all products produced or processed in the batch unit operation.

45. Section 63.1326 is amended by:

a. Revising paragraph (a) introductory text;

b. Revising paragraphs (a)(1) and (a)(2);

c. Revising paragraph (a)(3)(i);

d. Revising paragraph (a)(4);

e. Revising paragraphs (a)(7) through (a)(9);

f. Revising paragraph (b) introductory text;

g. Revising paragraph (b)(2);

h. Revising paragraphs (b)(3)(ii) and (b)(3)(iii);

i. Revising paragraph (b)(4)(iv);

j. Revising paragraphs (d)(1) and (d)(2);

k. Revising paragraph (e) introductory text;

l. Revising paragraphs (e)(1)(i) and (e)(1)(ii);

m. Revising paragraph (e)(2) introductory text;

n. Revising paragraph (e)(2)(ii);

o. Revising paragraph (e)(4);

p. Revising paragraph (f); and

q. Adding paragraph (g).

The revisions and additions read as follows:

§ 63.1326 Batch process vents—recordkeeping provisions.

(a) *Group determination records for batch process vents.* Except as provided in paragraphs (a)(7) and (a)(8) of this section, each owner or operator of an affected source shall maintain the records specified in paragraphs (a)(1) through (a)(6) of this section for each batch process vent subject to the group determination procedures of § 63.1323. Except for paragraph (a)(1) of this section, the records required by this paragraph (a) are restricted to the information developed and used to make the group determination under §§ 63.1323(b) through 63.1323(g), as appropriate. If an owner or operator did not need to develop certain information (*e.g.*, annual average batch vent flow rate) to determine the group status, this paragraph (a) does not require that additional information be developed. Paragraph (a)(9) of this section specifies the recordkeeping requirements for Group 2 batch process vents that are exempt from the batch mass input limitation provisions, as allowed under § 63.1322(h).

(1) An identification of each unique product that has emissions from one or more batch emission episodes venting from the batch process vent, along with an identification of the single highest-HAP recipe for each product and the mass of HAP fed to the reactor for that recipe.

(2) A description of, and an emission estimate for, each batch emission episode, and the total emissions associated with one batch cycle, as described in either paragraph (a)(2)(i) or (a)(2)(ii) of this section, as appropriate.

(i) If the group determination is based on the expected mix of products, records shall include the emission estimates for the single highest-HAP recipe of each unique product identified in paragraph (a)(1) of this section that was considered in making the group determination under § 63.1323.

(ii) If the group determination is based on the single highest-HAP recipe (considering all products produced or processed in the batch unit operation), records shall include the emission estimates for the single highest-HAP recipe.

(3) * * *

(i) For Group 2 batch process vents, said emissions shall be determined at the batch mass input limitation.

* * * * *

(4) The annual average batch vent flow rate for the batch process vent, determined in accordance with § 63.1323(e).

* * * * *

(7) If a batch process vent is subject to § 63.1322(a) or (b), none of the records in paragraphs (a)(1) through (a)(6) of this section are required.

(8) If the total annual emissions from the batch process vent during the group determination are less than the appropriate level specified in § 63.1323(d), only the records in paragraphs (a)(1) through (a)(3) of this section are required.

(9) For each Group 2 batch process vent that is exempt from the batch mass input limitation provisions because it meets the criteria of § 63.1322(h), the records specified in paragraphs (a)(9)(i) and (ii) shall be maintained.

(i) Documentation of the maximum design capacity of the TPPU; and

(ii) The mass of HAP or material that can be charged annually to the batch unit operation at the maximum design capacity.

(b) *Compliance demonstration records.* Each owner or operator of a batch process vent or aggregate batch vent stream complying with § 63.1322(a) or (b), shall keep the following records, as applicable, readily accessible:

* * * * *

(2) If the owner or operator of a batch process vent has chosen to comply with § 63.1322(a)(2), records documenting the batch cycle percent reduction as specified in § 63.1325(c)(2); and

(3) * * *

(ii) All visible emission readings, heat content determinations, flow rate measurements, and exit velocity determinations made during the compliance determination required by § 63.1333(e); and

(iii) Periods when all pilot flames were absent.

(4) * * *

(iv) For a scrubber or other halogen reduction device following a combustion device to control halogenated batch process vents or halogenated aggregate batch vent streams, the percent reduction of total hydrogen halides and halogens as determined under § 63.1325(d)(3) or the emission limit determined under § 63.1325(d)(4).

* * * * *

(d) * * *

(1) The owner or operator of a Group 2 batch process vent that has chosen to comply with § 63.1322(g) shall keep the following records readily accessible:

(i) Records designating the established batch mass input limitation required by § 63.1322(g)(1) and specified in § 63.1325(g).

(ii) Records specifying the mass of HAP or material charged to the batch unit operation.

(2) The owner or operator of a Group 2 batch process vent that has chosen to comply with § 63.1322(f) shall keep the following records readily accessible:

(i) Records designating the established batch mass input limitation required by § 63.1322(f)(1) and specified in § 63.1325(g).

(ii) Records specifying the mass of HAP or material charged to the batch unit operation.

(e) *Controlled batch process vent continuous compliance records.* Each owner or operator of a batch process vent that has chosen to use a control device to comply with § 63.1322(a) shall keep the following records, as applicable, readily accessible:

(1) * * *

(i) For flares, the records specified in Table 7 of this subpart shall be maintained in place of continuous records.

(ii) For carbon adsorbers, the records specified in Table 7 of this subpart shall be maintained in place of batch cycle daily averages.

(2) Records of the batch cycle daily average value of each continuously monitored parameter, except as provided in paragraph (e)(2)(iii) of this section, as calculated using the procedures specified in paragraphs (e)(2)(i) and (e)(2)(ii) of this section.

* * * * *

(ii) Monitoring data recorded during periods of monitoring system breakdowns, repairs, calibration checks, and zero (low-level) and high-level adjustments shall not be included in computing the batch cycle daily averages. In addition, monitoring data recorded during periods of non-operation of the TPPU (or specific portion thereof) resulting in cessation of organic HAP emissions, or periods of start-up, shutdown, or malfunction shall not be included in computing the batch cycle daily averages.

* * * * *

(4) Where a seal or closure mechanism is used to comply with § 63.1324(e)(2), hourly records of whether a diversion was detected at any time are not required. The owner or operator shall record whether the monthly visual inspection of the seals or closure mechanisms has been done, and shall record the occurrence of all periods when the seal mechanism is broken, the bypass line damper or valve position has changed, or the key for a lock-and-key type configuration has been checked out, and records of any car-seal that has broken.

* * * * *

(f) *Aggregate batch vent stream continuous compliance records.* In addition to the records specified in paragraphs (b) and (c) of this section, each owner or operator of an aggregate batch vent stream using a control device to comply with § 63.1322(b)(1) or (b)(2) shall keep the following records readily accessible:

(1) Continuous records of the equipment operating parameters specified to be monitored under § 63.1324(c) and listed in Table 7 of this subpart, as applicable, or specified by the Administrator in accordance with § 63.1327(f), as allowed under § 63.1324(d), with the exceptions listed in (f)(1)(i) and (f)(1)(ii) of this section.

(i) For flares, the records specified in Table 7 of this subpart shall be maintained in place of continuous records.

(ii) For carbon adsorbers, the records specified in Table 7 of this subpart shall be maintained in place of daily averages.

(2) Records of the daily average value of each continuously monitored parameter for each operating day determined according to the procedures specified in § 63.1335(d).

(3) For demonstrating compliance with the monitoring of bypass lines as specified in § 63.1324(e), records as specified in paragraphs (e)(3) or (e)(4) of this section, as appropriate.

(g) Documentation supporting the establishment of the batch mass input limitation shall include the information specified in paragraphs (g)(1) through (g)(5) of this section, as appropriate.

(1) Identification of whether the purpose of the batch mass input limitation is to comply with § 63.1322(f)(1) or (g)(1).

(2) Identification of whether the batch mass input limitation is based on the single highest–HAP recipe (considering all products) or on the expected mix of products for the batch process vent as allowed under § 63.1323(a)(1).

(3) Definition of the operating year, for the purposes of determining compliance with the batch mass input limitation.

(4) If the batch mass input limitation is based on the expected mix of products, the owner or operator shall provide documentation that describes as many scenarios for differing mixes of products (*i.e.*, how many of each type of product) as the owner or operator desires the flexibility to accomplish. Alternatively, the owner or operator shall provide a description of the relationship among the mix of products that will allow a determination of compliance with the batch mass input limitation under any number of scenarios.

(5) The mass of HAP or material allowed to be charged to the batch unit operation per year under the batch mass input limitation.

46. Section 63.1327 is amended by:

a. Revising paragraph (a) introductory text;

b. Revising paragraph (b);

c. Revising paragraph (c) introductory text;

d. Revising paragraph (c)(2);

e. Revising paragraph (d);

f. Revising paragraph (e);

g. Revising paragraph (g);

h. Removing paragraph (c)(3);

i. Adding paragraph (a)(5); and

j. Adding paragraph (a)(6).

The revisions and additions read as follows:

§ 63.1327 Batch process vents—reporting requirements.

(a) The owner or operator of a batch process vent or aggregate batch vent stream at an affected source shall submit the information specified in paragraphs (a)(1) through (a)(6) of this section, as appropriate, as part of the Notification of Compliance Status specified in § 63.1335(e)(5).

* * * * *

(5) For each Group 2 batch process vent that is exempt from the batch mass input limitation provisions because it meets the criteria of § 63.1322(h), the information specified in § 63.1326(a)(1) through (3), and the information specified in § 63.1326(a)(4) through (6) as applicable, calculated at the conditions specified in § 63.1322(h).

(6) When engineering assessment has been used to estimate emissions from a batch emissions episode and the criteria specified in § 63.1323(b)(6)(i)(A) or (B) have been met, the owner or operator shall submit the information

demonstrating that the criteria specified in § 63.1323(b)(6)(i)(A) or (B) have been met as part of the Notification of Compliance Status required by § 63.1335(e)(5).

(b) Whenever a process change, as defined in § 63.1323(i)(1), is made that causes a Group 2 batch process vent to become a Group 1 batch process vent, the owner or operator shall notify the Administrator and submit a description of the process change within 180 days after the process change is made or with the next Periodic Report, whichever is later. The owner or operator of an affected source shall comply with the Group 1 batch process vent provisions in §§ 63.1321 through 63.1327 in accordance with § 63.480(i)(2)(ii).

(c) Whenever a process change, as defined in § 63.1323(i)(1), is made that causes a Group 2 batch process vent with annual emissions less than the level specified in § 63.1323(d) for which the owner or operator has chosen to comply with § 63.1322(g) to have annual emissions greater than or equal to the level specified in § 63.1323(d) but remains a Group 2 batch process vent, or if a process change is made that requires the owner or operator to redetermine the batch mass input limitation as specified in § 63.1323(i)(3), the owner or operator shall submit a report within 180 days after the process change is made or with the next Periodic Report, whichever is later. The following information shall be submitted:

* * * * *

(2) The batch mass input limitation determined in accordance with § 63.1322(f)(1).

(d) Whenever a process change, as defined in § 63.1323(j)(1), is made that could potentially cause the percent reduction for all process vents at a new SAN affected source using a batch process to be less than 84 percent, the owner or operator shall notify the Administrator and submit a description of the process change within 180 days after the process change is made or with the next Periodic Report, whichever is later. The owner or operator shall comply with § 63.1322(a)(3) and all associated provisions in accordance with § 63.1310(i).

(e) The owner or operator is not required to submit a report of a process change if one of the conditions specified in paragraphs (e)(1) or (e)(2) of this section is met.

(1) The change does not meet the description of a process change in § 63.1323(i) or (j).

(2) The redetermined group status remains Group 2 for an individual batch process vent with annual emissions greater than or equal to the level specified in § 63.1323(d) and the batch mass input limitation does not decrease, a Group 2 batch process vent with annual emissions less than the level specified in § 63.1323(d) complying with § 63.1322(g) continues to have emissions less than the level specified in § 63.1323(d) and the batch mass input limitation does not decrease, or the achieved emission reduction remains at 84 percent or greater for new SAN affected sources using a batch process.

* * * * *

(g) Owners or operators of affected sources complying with § 63.1324(e), shall comply with paragraph (g)(1) or (g)(2) of this section, as appropriate.

(1) Submit reports of the times of all periods recorded under § 63.1326(e)(3) when the batch process vent is diverted from the control device through a bypass line, with the next Periodic Report.

(2) Submit reports of all occurrences recorded under § 63.1326(e)(4) in which the seal mechanism is broken, the bypass line damper or valve position has changed, or the key to unlock the bypass line damper or valve was checked out, with the next Periodic Report.

47. Section 63.1328 is revised to read as follows:

§ 63.1328 Heat exchange systems provisions.

(a) Except as specified in paragraph (b) of this section, each owner or operator of an affected source shall comply with § 63.104, with the differences noted in paragraphs (c) through (h) of this section, for the purposes of this subpart.

(b) The provisions of paragraph (a) of this section do not apply to each process contact cooling tower that is associated with an existing affected source manufacturing PET.

(c) When the term "chemical manufacturing process unit" is used in § 63.104, the term "thermoplastic product process unit" shall apply for purposes of this subpart, with the exception noted in paragraph (d) of this section.

(d) When the phrase "a chemical manufacturing process unit meeting the conditions of § 63.100(b)(1) through (b)(3) of this subpart, except for chemical manufacturing process units meeting the condition specified in § 63.100(c) of this subpart" is used in § 63.104(a), the term "a TPPU, except for TPPUs meeting the condition specified in § 63.1310(b)" shall apply for purposes of this subpart.

(e) When § 63.104 refers to Table 4 of subpart F of this part or Table 9 of subpart G of this part, the owner or operator is only required to consider organic HAP listed on Table 6 of this subpart, except for ethylene glycol which need not be considered under this section, for purposes of this subpart.

(f) When § 63.104(c)(3) specifies the monitoring plan retention requirements, and when § 63.104(f)(1) refers to the record retention requirements in § 63.103(c)(1), the requirements in §§ 63.1335(a) and 63.1335(h) shall apply, for purposes of this subpart.

(g) When § 63.104(f)(2) requires information to be reported in the Periodic Reports required by § 63.152(c), the owner or operator shall instead report the information specified in § 63.104(f)(2) in the Periodic Reports required by § 63.1335(e)(6), for the purposes of this subpart.

(h) The compliance date for heat exchange systems subject to the provisions of this section is specified in § 63.1311.

48. Section 63.1329 is amended by:

a. Revising paragraph (a);

b. Revising paragraph (c) introductory text;

c. Revising paragraphs (c)(1)(i) through (c)(1)(iii); and

d. Revising paragraph (c)(2).

The revisions read as follows:

§ 63.1329 Process contact cooling towers provisions.

(a) The owner or operator of each new affected source that manufactures PET is required to comply with paragraph (b) of this section. The owner or operator of each existing affected source that manufactures PET using a continuous terephthalic acid high viscosity multiple end finisher process that utilizes a process contact cooling tower shall comply with paragraph (c) of this section, and is not required to comply with paragraph (b) of this section. The compliance date for process contact cooling towers subject to the provisions of this section is specified in § 63.1311.

* * * * *

(c) *Existing affected source requirements.* The owner or operator of an existing affected source subject to this section who manufactures PET using a continuous terephthalic acid high viscosity multiple end finisher process, and who is subject or becomes subject to 40 CFR part 60, subpart DDD, shall maintain an ethylene glycol concentration in the process contact cooling tower at or below 4.0 percent by weight averaged on a daily basis over a rolling 14-day period of operating days. Compliance with this paragraph (c)

shall be determined as specified in paragraphs (c)(1) through (c)(4) of this section. It should be noted that compliance with this paragraph (c) does not exempt owners or operators from complying with the provisions of § 63.1330 for those process wastewater streams that are sent to the process contact cooling tower.

(1) * * *

(i) At least one sample per operating day shall be collected using the procedures specified in 40 CFR 60.564(j)(1)(i). An average ethylene glycol concentration by weight shall be calculated on a daily basis over a rolling 14-day period of operating days. Each daily average ethylene glycol concentration so calculated constitutes a performance test.

(ii) The owner or operator may elect to reduce the sampling program to any 14 consecutive operating day period once every two calendar months, if at least seventeen consecutive 14-day rolling average concentrations immediately preceding the reduced sampling program are each less than 1.2 weight percent ethylene glycol. If the average concentration obtained over the 14 operating day sampling during the reduced test period exceeds the upper 95 percent confidence interval calculated from the most recent test results in which no one 14-day average exceeded 1.2 weight percent ethylene glycol, then the owner or operator shall reinstitute a daily sampling program. The 95 percent confidence interval shall be calculated as specified in paragraph (c)(1)(iii) of this section. A reduced program may be reinstituted if the requirements specified in this paragraph (c)(1)(ii) are met.

(iii) The upper 95 percent confidence interval shall be calculated using the Equation 27 of this subpart:

$$CI_{95} = \frac{\sum_{i=1}^{n} X_i}{n} + 2\sqrt{\frac{n\sum_{i=1}^{n}\left(X_i^2\right) - \left(\sum_{i=1}^{n} X_i\right)^2}{n(n-1)}} \qquad \text{[Eq. 27]}$$

Where:

CI_{95} = 95 percent confidence interval

X_i = daily ethylene glycol concentration for each operating day used to calculate each 14-day rolling average used in test results to justify implementing the reduced testing program.

n = number of ethylene glycol concentrations.

(2) Measuring an alternative parameter, such as carbon oxygen demand or biological oxygen demand, that is demonstrated to be directly proportional to the ethylene glycol concentration shall be allowed. Such parameter shall be measured during the initial 14-day performance test during which the facility is shown to be in compliance with the ethylene glycol concentration standard whereby the ethylene glycol concentration is determined using the procedures described in paragraph (c)(1) of this section. The alternative parameter shall be measured on a daily basis and the average value of the alternative parameter shall be calculated on a daily basis over a rolling 14-day period of operating days. Each daily average value of the alternative parameter constitutes a performance test.

* * * * *

49. Section 63.1330 is amended by:

a. Revising paragraph (a);

b. Revising paragraph (b); and

c. Adding paragraph (c).

The revisions and additions read as follows:

§ 63.1330 Wastewater provisions.

(a) Except as specified in paragraphs (d) and (e) of this section, the owner or operator of each affected source shall comply, as specified in paragraph (b) of this section, with the requirements of §§ 63.132 through 63.147 for each process wastewater stream originating at an affected source, with the requirements of § 63.148 for leak inspection provisions, and with the requirements of § 63.149 for equipment that is subject to § 63.149. Further, the owner or operator of each affected source shall comply with the requirements of § 63.105(a) for maintenance wastewater as specified in paragraph (c) of this section.

(b) The owner or operator of each affected source shall comply with the requirements of §§ 63.132 through 63.149, with the differences noted in paragraphs (b)(1) through (b)(22) of this section for the purposes of this subpart.

(1) When the determination of equivalence criteria in § 63.102(b) is referred to in §§ 63.132, 63.133, and 63.137, the provisions in § 63.6(g) shall apply for the purposes of this subpart.

(2) When the storage vessel requirements contained in §§ 63.119 through 63.123 are referred to in §§ 63.132 through 63.149, §§ 63.119 through 63.123 are applicable, with the exception of the differences referred to in § 63.1314, for the purposes of this subpart.

(3) When § 63.146(a) requires the submission of a request for approval to monitor alternative parameters according to the procedures specified in § 63.151(f) or (g), owners or operators requesting to monitor alternative parameters shall follow the procedures specified in § 63.1335(f) for the purposes of this subpart.

(4) When § 63.147(d) requires owners or operators to keep records of the daily average value of each continuously monitored parameter for each operating day as specified in § 63.152(f), owners and operators shall instead keep records of the daily average value of each continuously monitored parameter as specified in § 63.1335(d) for the purposes of this subpart.

(5) When §§ 63.132 through 63.149 refer to an "existing source," the term "existing affected source," as defined in § 63.1310(a), shall apply for the purposes of this subpart.

(6) When §§ 63.132 through 63.149 refer to a "new source," the term "new affected source," as defined in § 63.1310(a), shall apply for the purposes of this subpart.

(7) When § 63.132(a) and (b) refer to the "applicable dates specified in § 63.100 of subpart F of this part," the compliance dates specified in § 63.1311 shall apply for the purposes of this subpart.

(8) The provisions of paragraphs (b)(8)(i), (b)(8)(ii), and (b)(8)(iii) of this section clarify the organic HAP that an owner or operator shall consider when complying with the requirements in §§ 63.132 through 63.149.

(i) When §§ 63.132 through 63.149 refer to table 8 of compounds, the owner or operator is only required to consider 1,3-butadiene for purposes of this subpart.

(ii) When §§ 63.132 through 63.149 refer to table 9 of compounds, the owner or operator is only required to consider compounds that meet the definition of organic HAP in § 63.1312 and that are listed on table 9 of 40 CFR part 63, for the purposes of this subpart, except for ethylene glycol which need not be considered.

(iii) When §§ 63.132 through 63.149 refer to compounds in table 36 of 40 CFR part 63, subpart G, or compounds on List 1 and/or List 2, as listed on table 36 of 40 CFR part 63, subpart G, the owner or operator is only required to consider compounds that meet the definition of organic HAP in § 63.1312 and that are listed in table 36 of 40 CFR part 63, subpart G, for the purposes of this subpart.

(9) Whenever §§ 63.132 through 63.149 refer to a "chemical manufacturing process unit," the term "thermoplastic product process unit," (or TPPU) as defined in § 63.1312, shall apply for the purposes of this subpart. In addition, when § 63.149 refers to "a chemical manufacturing process unit that meets the criteria of § 63.100(b) of subpart F of this part," the term "a TPPU as defined in § 63.1312(b)" shall apply for the purposes of this subpart.

(10) Whenever §§ 63.132 through 63.149 refer to a Group 1 wastewater stream or a Group 2 wastewater stream, the definitions of these terms contained in § 63.1312 shall apply for the purposes of this subpart.

(11) When § 63.149(d) refers to "§ 63.100(f) of subpart F", the phrase "§ 63.1310(c)" shall apply for the purposes of this subpart. In addition, where § 63.149(d) states "and the item of equipment is not otherwise exempt from controls by the provisions of subpart A, F, G, or H of this part", the phrase "and the item of equipment is not otherwise exempt from controls by the provisions of subparts A, F, G, H, or JJJ of this part" shall apply for the purposes of this subpart.

(12) When § 63.149(e)(1) and (e)(2) refer to "a chemical manufacturing process unit subject to the new source requirements of 40 CFR § 63.100(l)(1) or 40 CFR § 63.100(l)(2)," the phrase "a TPPU that is part of a new affected source or that is a new affected source," shall apply for the purposes of this subpart.

(13) When the Notification of Compliance Status requirements contained in § 63.152(b) are referred to in §§ 63.138 and 63.146, the Notification of Compliance Status requirements contained in § 63.1335(e)(5) shall apply for the purposes of this subpart. In addition, when §§ 63.132 through 63.149 require that information be reported according to § 63.152(b) in the Notification of Compliance Status, the owner or operator of an affected source shall report the specified information in the Notification of Compliance Status required by § 63.1335(e)(5) for the purposes of this subpart.

(14) When the Periodic Report requirements contained in § 63.152(c) are referred to in § 63.146, the Periodic Report requirements contained in § 63.1335(e)(6) shall apply for the purposes of this subpart. In addition, when §§ 63.132 through 63.149 require that information be reported in the Periodic Reports required in § 63.152(c), the owner or operator of an affected source shall report the specified information in the Periodic Reports required in § 63.1335(e)(6) for the purposes of this subpart.

(15) When § 63.143(f) specifies that owners or operators shall establish the range that indicates proper operation of the treatment process or control device, the owner or operator shall instead comply with the requirements of § 63.1334(c) or (d) for establishing parameter level maximums/minimums for the purposes of this subpart.

(16) When § 63.146(b)(7) and § 63.146(b)(8) require that "the information on parameter ranges specified in § 63.152(b)(2)" be reported in the Notification of Compliance Status, owners and operators of affected sources are instead required to report the information on parameter levels as specified in § 63.1335(e)(5)(ii) for the purposes of this subpart.

(17) When the term "range" is used in §§ 63.132 through 63.149, the term "level" apply instead for the purposes of this subpart. This level shall be determined using the procedures specified in § 63.1334.

(18) For the purposes of this subpart, the owner or operator of an affected source is not required to include process wastewater streams that contain styrene when conducting performance tests for the purposes of calculating the required mass removal (RMR) or the actual mass removal (AMR) under the provisions described in § 63.145(f) or § 63.145(g). For purposes of this paragraph, a process wastewater stream is considered to contain styrene if the wastewater stream meets the requirements in paragraph (b)(18)(i), (ii), (iii), (iv), or (v) of this section.

(i) The wastewater stream originates at equipment that produces ABS or ABS latex;

(ii) The wastewater stream originates at equipment that produces EPS;

(iii) The wastewater stream originates at equipment that produces MABS;

(iv) The wastewater stream originates at equipment that produces MBS; or

(v) The wastewater stream originates at equipment that produces SAN.

(19) When the provisions of § 63.139(c)(1)(ii), § 63.145(d)(4), or § 63.145(i)(2) specify that Method 18, 40 CFR part 60, appendix A, shall be used, Method 18 or Method 25A, 40 CFR part 60, appendix A, may be used for the purposes of this subpart. The use of Method 25A, 40 CFR part 60, appendix A, shall conform with the requirements in paragraphs (b)(19)(i) and (b)(19)(ii) of this section.

(i) The organic HAP used as the calibration gas for Method 25A, 40 CFR part 60, appendix A, shall be the single organic HAP representing the largest percent by volume of the emissions.

(ii) The use of Method 25A, 40 CFR part 60, appendix A, is acceptable if the response from the high-level calibration gas is at least 20 times the standard deviation of the response from the zero calibration gas when the instrument is zeroed on the most sensitive scale.

(20) In § 63.145(j), instead of the reference to § 63.11(b), and instead of § 63.145(j)(1) and § 63.145(j)(2), the requirements in § 63.1333(e) shall apply.

(21) The owner or operator of a facility which receives a Group 1 wastewater stream, or a residual removed from a Group 1 wastewater stream, for treatment pursuant to § 63.132(g) is subject to the requirements of § 63.132(g) with the differences identified in this section, and is not subject to subpart DD of this part with respect to that material.

(22) When § 63.132(g) refers to "§§ 63.133 through 63.137" or "§§ 63.133 through 63.147", the provisions in this section 63.1330 shall apply, for the purposes of this subpart.

(c) For each affected source, the owner or operator shall comply with the requirements for maintenance wastewater in § 63.105, except that when § 63.105(a) refers to "organic HAPs listed in table 9 of subpart G of this part," the owner or operator is only required to consider compounds that meet the definition of organic HAP in § 63.1312 and that are listed in table 9 of 40 CFR part 63, subpart G, except for ethylene glycol which need not be considered, for the purposes of this subpart.

* * * * *

50. Section 63.1331 is amended by:

a. Revising paragraph (a) introductory text;

b. Revising paragraph (a)(2);

c. Revising paragraphs (a)(4) and (a)(5);

d. Revising paragraph (a)(6) introductory text;

e. Revising paragraph (a)(6)(i);

f. Revising paragraphs (a)(6)(ii)(A) and (a)(6)(ii)(B);

g. Revising paragraph (a)(7);

h. Revising paragraph (a)(8) introductory text;

i. Revising paragraph (a)(10);

j. Revising paragraph (b);

k. Adding paragraphs (a)(6)(iii) and (a)(6)(iv);

l. Adding paragraphs (a)(11) through (a)(13); and

m. Removing and reserving paragraph (a)(9).

The revisions and additions read as follows:

§ 63.1331 Equipment leak provisions.

(a) Except as provided for in paragraphs (b) and (c) of this section, the owner or operator of each affected source shall comply with the requirements of subpart H of this part, with the differences noted in paragraphs (a)(1) through (a)(13) of this section.

* * * * *

(2) The compliance date for the equipment leak provisions contained in this section is provided in § 63.1311. Whenever subpart H of this part refers to the compliance dates specified in any paragraph contained in § 63.100, the compliance dates listed in § 63.1311(d) shall instead apply, for the purposes of this subpart. When § 63.182(c)(4) refers to "sources subject to subpart F," the phrase "sources subject to this subpart" shall apply, for the purposes of this subpart. In addition, extensions of compliance dates are addressed by § 63.1311(e) instead of § 63.182(a)(6), for the purposes of this subpart.

* * * * *

(4) As specified in § 63.1335(e)(5), the Notification of Compliance Status required by paragraphs § 63.182(a)(2) and § 63.182(c) shall be submitted within 150 days (rather than 90 days) of the applicable compliance date specified in § 63.1311 for the equipment leak provisions.

(5) The information specified by § 63.182(a)(3) and § 63.182(d) (*i.e.*, Periodic Reports) shall be submitted as part of the Periodic Reports required by § 63.1335(e)(6).

(6) For pumps, valves, connectors, and agitators in heavy liquid service; pressure relief devices in light liquid or heavy liquid service; and instrumentation systems, owners or operators of affected sources producing PET shall comply with the requirements of paragraphs (a)(6)(i) and (a)(6)(ii) of this section instead of with the requirements of § 63.169. Owners or operators of PET affected sources shall comply with all other provisions of subpart H of this part for pumps, valves, connectors, and agitators in heavy liquid service; pressure relief devices in light liquid or heavy liquid service; and instrumentation systems, except as specified in paragraphs (a)(6)(iii) through (a)(6)(iv) of this section.

(i) A leak is determined to be detected if there is evidence of a potential leak found by visual, audible, or olfactory means. Method 21, 40 CFR part 60, appendix A may not be used to determine the presence or absence of a leak.

(ii)(A) When a leak is detected, it shall be repaired as soon as practical, but not later than 15 days after it is detected, except as provided in § 63.171.

(B) The first attempt at repair shall be made no later than 5 days after each leak is detected.

* * * * *

(iii) An owner or operator is not required to develop an initial list of identification numbers as would otherwise be required under § 63.181(b)(1)(i) or § 63.181(b)(4).

(iv) When recording the detection of a leak under § 63.182(d)(1), the owner or operator of an affected source shall comply with paragraphs (a)(6)(iv)(A) through (a)(6)(iv)(B) of this section.

(A) When complying with § 63.181(d)(1), provide an identification number for the leaking equipment at the time of recordkeeping. Further, the owner or operator is not required to record the identification number of the instrument (*i.e.*, Method 21 instrument) because the use of Method 21 is not an acceptable method for determining a leak under this paragraph (a)(6).

(B) An owner or operator is not required to comply with § 63.181(d)(4) which requires a record of the maximum instrument reading measured by Method 21 of 40 CFR part 60, appendix A.

(7) When § 63.166(b)(4)(i) refers to Table 9 of subpart G of this part, the owner or operator is only required to consider organic HAP listed on Table 6 of this subpart for purposes of this subpart, except for ethylene glycol which need not be considered.

(8) When the provisions of subpart H of this part specify that Method 18, 40 CFR part 60, appendix A, shall be used, Method 18 or Method 25A, 40 CFR part 60, appendix A, may be used for the purposes of this subpart. The use of Method 25A, 40 CFR part 60, appendix A, shall conform with the requirements in paragraphs (a)(8)(i) and (a)(8)(ii) of this section.

* * * * *

(9) [Reserved.]

(10) If specific items of equipment, comprising part of a process unit subject to this subpart, are managed by different administrative organizations (*e.g.*, different companies, affiliates, departments, divisions, *etc.*), those items of equipment may be aggregated with any TPPU within the affected source for all purposes under subpart H of this part, providing there is no delay in achieving the applicable compliance date.

(11) When the terms "equipment" and "equipment leak" are used in subpart H of this part, the definitions of these terms in § 63.1312 shall apply for the purposes of this subpart.

(12) The phrase "the provisions of subparts F, I, or JJJ of this part" shall apply instead of the phrase "the provisions of subpart F or I of this part" throughout §§ 63.163 and 63.168, for the purposes of this subpart. In addition, the phrase "subparts F, I, and JJJ" shall apply instead of the phrase "subparts F and I" in § 63.174(c)(2)(iii), for the purposes of this subpart.

(13) An owner or operator using a flare to comply with the requirements of this section shall conduct a compliance demonstration as specified in § 63.1333(e).

(b) The provisions of this section do not apply to each TPPU producing PET using a process other than a continuous terephthalic acid (TPA) high viscosity multiple end finisher process that is part of an affected source if all of the equipment leak components subject to this section § 63.1331 in the TPPU are either in vacuum service or in heavy liquid service.

(1) Owners and operators of a TPPU exempted under paragraph (b) of this section shall comply with paragraph (b)(1)(i) or (b)(1)(ii) of this section.

(i) Retain information, data, and analyses used to demonstrate that all of the components in the exempted TPPU are either in vacuum service or in heavy liquid service. For components in vacuum service, examples of information that could document this include, but are not limited to, analyses of process stream composition and process conditions, engineering calculations, or process knowledge. For components in heavy liquid service, such documentation shall include an analysis or demonstration that the process fluids do not meet the criteria of "in light liquid service" or "in gas or vapor service."

(ii) When requested by the Administrator, demonstrate that all of the components in the TPPU are either in vacuum service or in heavy liquid service.

(2) If changes occur at a TPPU exempted under paragraph (b) of this section such that all of the components in the TPPU are no longer either in vacuum service or in heavy liquid service (*e.g.*, by either process changes or the addition of new components), the owner or operator of the affected source shall comply with the provisions of this section for all of the components at the TPPU. The owner or operator shall

submit a report within 180 days after the process change is made or the information regarding the process change is known to the owner or operator. This report may be included in the next Periodic Report, as specified in paragraph (a)(5) of this section. A description of the process change shall be submitted with this report.

* * * * *

51. Section 63.1333 is amended by:

a. Revising the section title;

b. Revising paragraph (a) introductory text;

c. Revising paragraphs (a)(1) and (a)(2);

d. Revising paragraph (a)(4);

e. Revising paragraph (b) introductory text;

f. Adding paragraph (a)(5); and

g. Adding paragraph (e).

The revisions and additions read as follows:

§ 63.1333 Additional requirements for performance testing.

(a) Performance testing shall be conducted in accordance with § 63.7(a)(1), (a)(3), (d), (e)(1), (e)(2), (e)(4), (g), and (h), with the exceptions specified in paragraphs (a)(1) through (a)(5) of this section and the additions specified in paragraphs (b) through (d) of this section. Sections 63.1314 through 63.1330 also contain specific testing requirements.

(1) Performance tests shall be conducted according to the provisions of § 63.7(e)(1) and (e)(2), except that performance tests shall be conducted at maximum representative operating conditions achievable during one of the time periods described in paragraph (a)(1)(i) of this section, without causing any of the situations described in paragraph (a)(1)(ii) of this section to occur.

(i) The 6-month period that ends 2 months before the Notification of Compliance Status is due, according to § 63.1335(e)(5); or the 6-month period that begins 3 months before the performance test and ends 3 months after the performance test.

(ii) Causing damage to equipment; necessitating that the owner or operator make product that does not meet an existing specification for sale to a customer; or necessitating that the owner or operator make product in excess of demand.

(2) The requirements in 63.1335(e)(5) shall apply instead of the ferences in § 63.7(g) to the Notification Compliance Status requirements in 3.9(h).

* * * *

The owner or operator shall notify dministrator of the intention to conduct a performance test at least 30 days before the performance test is scheduled to allow the Administrator the opportunity to have an observer present during the test. If after 30 days notice for an initially scheduled performance test, there is a delay (due to operational problems, etc.) in conducting the scheduled performance test, the owner or operator of an affected facility shall notify the Administrator as soon as possible of any delay in the original test date, either by providing at least 7 days prior notice of the rescheduled date of the performance test, or by arranging a rescheduled date with the Administrator by mutual agreement.

(5) Performance tests shall be performed no later than 150 days after the compliance dates specified in this subpart (*i.e.*, in time for the results to be included in the Notification of Compliance Status), rather than according to the time periods in § 63.7(a)(2) of subpart A of this part.

(b) Each owner or operator of an existing affected source producing MBS complying with § 63.1315(b)(2) shall determine compliance with the mass emission per mass product standard by using Equation 49 of this subpart. When determining E_i, when the provisions of § 63.116(c)(4) specify that Method 18, 40 CFR part 60, appendix A, shall be used, Method 18 or Method 25A, 40 CFR part 60, appendix A, may be used for the purposes of this subpart. The use of Method 25A, 40 CFR part 60, appendix A, shall conform with the requirements in paragraphs (b)(1) and (b)(2) of this section.

$$ER_{MBS} = \frac{\sum_{i=1}^{n} E_i}{PP_M} \qquad \text{[Eq. 49]}$$

Where:

ER_{MBS} = Emission rate of organic HAP or TOC from continuous process vents, kg/Mg product.

E_i = Emission rate of organic HAP or TOC from continuous process vent i as calculated using the procedures specified in § 63.116(c)(4), kg/month.

PP_M = Amount of polymer produced in one month as determined by the procedures specified in § 63.1318(b)(1)(ii), Mg/month.

n = Number of continuous process vents.

* * * * *

(e) Notwithstanding any other provision of this subpart, if an owner or operator of an affected source uses a flare to comply with any of the requirements of this subpart, the owner or operator shall comply with paragraphs (e)(1) through (e)(3) of this section. The owner or operator is not required to conduct a performance test to determine percent emission reduction or outlet organic HAP or TOC concentration. If a compliance demonstration has been conducted previously for a flare, using the techniques specified in paragraphs (e)(1) through (e)(3) of this section, that compliance demonstration may be used to satisfy the requirements of this paragraph if either no deliberate process changes have been made since the compliance demonstration, or the results of the compliance demonstration reliably demonstrate compliance despite process changes.

(1) Conduct a visible emission test using the techniques specified in § 63.11(b)(4);

(2) Determine the net heating value of the gas being combusted, using the techniques specified in § 63.11(b)(6); and

(3) Determine the exit velocity using the techniques specified in either § 63.11(b)(7)(i) (and § 63.11(b)(7)(iii), where applicable) or § 63.11(b)(8), as appropriate.

52. Section 63.1334 is amended by:

a. Revising paragraph (a);

b. Revising paragraph (b) introductory text;

c. Revising paragraph (b)(3) introductory text;

d. Revising paragraphs (b)(3)(i)(A) through (b)(3)(i)(D);

e. Revising paragraph (b)(3)(ii);

f. Revising paragraph (c);

g. Revising paragraph (d);

h. Revising paragraph (f)(1) introductory text;

i. Revising paragraphs (f)(1)(ii) and (f)(1)(iii);

j. Revising paragraph (f)(2) introductory text;

k. Revising paragraph (f)(2)(ii);

l. Removing and reserving paragraph (b)(1);

m. Removing and reserving paragraph (e);

n. Removing paragraph (b)(3)(i)(E);

o. Adding paragraph (f)(1)(v); and

p. Adding paragraph (f)(3) through (f)(7).

The revisions and additions read as follows:

§ 63.1334 Parameter monitoring levels and excursions.

(a) *Establishment of parameter monitoring levels.* The owner or operator of a control or recovery device that has one or more parameter monitoring level requirements specified under this subpart shall establish a maximum or minimum level for each

NOTICE:

ALL FEDERAL ATTACHMENTS ARE UNCHANGED. SEE THE COMMENT PERIOD TO VIEW THESE ATTACHMENTS.