WEST VIRGINIA

SECRETARY OF STATE

KEN HECHLER

ADMINISTRATIVE LAW DIVISION

Form #6

Do Not Mark In this Box

FILED

APR 25 3 49 PM '96

OFFICE OF WEST VIRGINIA
SECRETARY OF STATE

NOTICE OF FINAL FILING AND ADOPTION OF A LEGISLATIVE RULE AUTHORIZED BY THE WEST VIRGINIA LEGISLATURE.

AGENCY: Division of Environmental Protection Office of Air Quality TITLE NUMBER: 45CSR21

AMENDMENT TO AN EXISTING RULE: YES X, NO ___

IF YES, SERIES NUMBER OF RULE BEING AMENDED: 45CSR21

TITLE OF RULE BEING AMENDED: Regulation to Prevent and Control Air Pollution from the Emission of Volatile Organic Compounds

IF NO, SERIES NUMBER OF NEW RULE BEING PROPOSED: ___

TITLE OF RULE BEING PROPOSED: ___

THE ABOVE RULE HAS BEEN AUTHORIZED BY THE WEST VIRGINIA LEGISLATURE.

AUTHORIZATION IS CITED IN (house or senate bill number) HB 4224

SECTION 64-3-1(j), PASSED ON March 9, 1996.

THIS RULE IS FILED WITH THE SECRETARY OF STATE. THIS RULE BECOMES EFFECTIVE ON THE FOLLOWING DATE: May 1, 1996

AUTHORIZED SIGNATURE

G. Dale Farley
Chief

30.00

FILED

APR 25 3 49 PM '96

OFFICE OF WEST VIRGINIA
SECRETARY OF STATE

TITLE 45
LEGISLATIVE RULE
BUREAU OF ENVIRONMENT
DIVISION OF ENVIRONMENTAL PROTECTION
OFFICE OF AIR QUALITY

SERIES 21
REGULATION TO PREVENT AND CONTROL AIR POLLUTION FROM THE EMISSION OF VOLATILE ORGANIC COMPOUNDS

§45-21-1. General.

1.1. Scope. -- It is the intent of the Director that all persons engaged in the manufacture, mixing, storage, use, or application of volatile organic compounds control the emission of volatile organic compounds through the application of reasonably available control technology. This regulation applies to sources located in Putnam County, Kanawha County, Cabell County, Wayne County, and Wood County.

1.2. Authority. -- W.V. Code §§22-5-1 et seq.

1.3. Filing Date. -- April 25, 1996.

1.4. Effective Date. -- May 1, 1996.

1.5. Incorporation by Reference -- Federal Counterpart Regulation - Not Applicable.

§45-21-2. Definitions.

For the purpose of this regulation, the following definitions shall apply:

2.1. "Actual emissions" means the quantity of volatile organic compounds (VOCs) emitted from a source during a particular time period.

2.2. "Air pollution", 'statutory air pollution' means and is limited to the discharge into the air by the act of man of substances (liquid, solid, gaseous, organic or inorganic) in a locality, manner and amount as to be injurious to human health or welfare, animal or plant life, or property, or which would interfere with the enjoyment of life or property.

2.3. "Ambient air" means that portion of the atmosphere, external to buildings, to which the general public has access.

2.4. "As applied" means including dilution solvents added before application of the coating.

2.5. "ASTM" means American Society For Testing And Materials.

2.6. "Bulk gasoline plant" means a gasoline storage and distribution facility with an average daily throughput of 76,000 liters (L) (20,000 gallons [gal]) of gasoline or less on a 30-day rolling average.

2.7. "Bulk gasoline terminal" means a gasoline storage facility that receives gasoline from refineries, delivers gasoline to bulk gasoline plants or to commercial or retail accounts, and has a daily throughput of more than 76,000 liters (20,000 gallons) of gasoline on a 30-day rolling average.

2.8. "Capture efficiency" means the weight per unit time of VOC entering a capture system and delivered to a control device divided by the weight per unit time of total VOC generated by a source of VOC, expressed as a percentage.

2.9. "Capture system" means all equipment (including, but not limited to, hoods, ducts, fans, booths, ovens, dryers, etc.) that contains, collects, and transports an air pollutant to a control device.

2.10. "Carbon adsorber" means an add-on control device which uses activated carbon to adsorb volatile organic compounds from a gas stream.

2.11. "Carbon adsorption system" means a carbon adsorber with an inlet and outlet for exhaust gases and a system to regenerate the saturated adsorbent.

2.12. [RESERVED]

2.13. "Coating" means a material applied onto or impregnated into a substrate for protective, decorative, or functional purposes. Such materials include, but are not limited to, paints, varnishes, sealants, adhesives, inks, maskants, and temporary protective coatings.

2.14. "Coating line" means a series of one or more coating applicators and any associated drying area and/or oven wherein a coating is applied, dried, and/or cured. A coating line ends at the point where the coating is dried or cured, or prior to any subsequent application of a different coating. It is not necessary to have an oven or a flashoff area in order to be included in this definition. This definition does not apply to web coating.

2.15. [RESERVED]

2.16. "Condensate" means volatile organic compound (VOC) liquid separated from natural gas, that condenses due to changes in the temperature and/or pressure and remains liquid at standard conditions.

2.17. "Condenser" means any heat transfer device used to liquify vapors by removing their latent heats of vaporization. Such devices include, but are not limited to, shell and tube, coil, surface, or contact condensers.

2.18. "Construction" means on-site fabrication, erection, or installation of a source, air pollution control or monitoring equipment, or a facility.

2.19. "Continuous vapor control system" means a vapor control system that treats vapors displaced from tanks during filling on a demand basis without intermediate accumulation.

2.20. "Control device" means equipment (such as an incinerator or carbon adsorber) used to reduce, by destruction or removal, the amount of air pollutant(s) in an air stream prior to discharge to the ambient air.

2.21. "Control system" means a combination of one or more capture system(s) and control device(s) working in concert to reduce discharges of pollutants to the ambient air.

2.22. "Crude oil" means a naturally occurring mixture that consists of hydrocarbons and/or sulfur, nitrogen, and/or oxygen derivatives of hydrocarbons and that is liquid at standard conditions.

2.23. "Day" means a period of 24 consecutive hours beginning at midnight local time, or beginning at a time consistent with a facility's operating schedule.

2.24. "Destruction or removal efficiency" means the amount of VOC destroyed or removed by a control device expressed as a percent of the total amount of VOC entering the device.

2.25. "Director" means the director of the Division of Environmental Protection or such other person to whom the Director has delegated authority or duties pursuant to W.V. Code §22-1-6 or §22-1-8.

2.26. "Division of Environmental Protection" means the Division of Environmental Protection as defined in the provisions of W.V. Code §§22-1-1, et seq.

2.27. "Double block-and-bleed system" means two block valves connected in series with a bleed valve or line that can vent the line between the two block valves.

2.28. "Emission" means the release or discharge, whether directly or indirectly, of volatile organic compounds into the ambient air.

2.29. "Excess emissions" means those emissions in excess of any requirement, standard, or numerical emission limit specified in this regulation.

2.30. "External floating roof" means a cover over an open-top storage tank consisting of a double deck or pontoon single deck that rests upon and is supported by the volatile organic liquid being contained and is equipped with a closure seal or seals to close the space between the roof edge and tank shell.

2.31. "Facility" means all of the pollutant-emitting activities that are located on one or more contiguous or adjacent properties, and are under the control of the same person (or person under common control).

2.32. "First attempt at repair" means to take rapid action for the purpose of stopping or reducing leakage of volatile organic compounds to the atmosphere using best practices.

2.33. "Flashoff area" means the space between the coating application area and the oven.

2.34. "Gasoline" means any petroleum distillate or petroleum distillate/alcohol blend having a Reid vapor pressure of 27.6 kiloPascals (kPa) (8.15 inches of Mercury [in Hg]) or greater that is used as a fuel for internal combustion engines.

2.35. "Gasoline dispensing facility" means any site where gasoline is transferred from a stationary storage tank to a motor vehicle gasoline tank used to provide fuel to the engine of that motor vehicle.

2.36. "Gasoline tank truck" means any truck or trailer equipped with a storage tank that is used for the transport of gasoline or vapor from a source of supply to a stationary storage tank at a gasoline dispensing facility, bulk gasoline plant, or bulk gasoline terminal.

2.37. "Incinerator" means a combustion apparatus in which solid, semisolid,

liquid, or gaseous combustible wastes are ignited and burned and from which the solid and gaseous residues contain little or no combustible material.

2.38. "Intermittent vapor control system" means a vapor control system that employs an intermediate vapor holder to accumulate vapors displaced from tanks during filling. The control device treats the accumulated vapors only during automatically controlled cycles.

2.39. "Knife coating" means the application of a coating material to a substrate by means of drawing the substrate beneath a knife that spreads the coating evenly over the full width of the substrate.

2.40. "Leak" means a VOC emission indicated by an instrument calibrated according to Method 21 of 40 CFR Part 60, Appendix A using zero air (less than 10 parts per million [ppm] of hydrocarbon in air) and a mixture of methane or n-hexane and air at a concentration of approximately, but less than, 10,000 ppm methane or n-hexane.

2.41. "Lease custody transfer" means the transfer of produced crude oil or condensate, after processing and/or treating in the producing operations, from storage tanks or automatic transfer facilities to pipelines or any other forms of transportation.

2.42. "Loading rack" means an aggregation or combination of gasoline loading equipment arranged so that all loading outlets in the combination can be connected to a tank truck or trailer parked in a specified loading space.

2.43. "Lower explosive limit" (also denoted as LEL) means the concentration of a compound in air below which a flame will not propagate if the mixture is ignited.

2.44. "Maximum theoretical emissions" means the quantity of VOC that theoretically could be emitted by a source without control devices based on the design capacity or maximum production capacity of the source and 8,760 hours of operation per year. The design capacity or maximum production capacity includes use of coatings with the highest VOC content used in practice by the source for the two years preceding May 31, 1993.

2.45. "Maximum true vapor pressure" means the equilibrium partial pressure exerted by a stored liquid at the temperature equal to: (1) for liquids stored above or below the ambient temperature, the highest calendar-month average of the liquid storage temperature, or (2) for liquids stored at the ambient temperature, the local maximum monthly average temperature as reported by the National Weather Service. This pressure shall be determined:

a. In accordance with methods described in American Petroleum Institute Bulletin 2517, "Evaporation Loss From External Floating Roof Tanks";

b. By using standard reference texts;

c. By ASTM D2879-83; or

d. By any other method approved by the U.S. EPA.

2.46. "Modification" or "Modified" means any physical change or change in a source which increases its potential to emit volatile oraganic compounds.

2.47. "Open-ended valve or line" means any valve, except a safety relief valve, having one side of the valve seat in contact with process fluid and one side open to the atmosphere, either directly or through open piping.

2.48. "Organic compound" means a chemical compound of carbon excluding carbon monoxide, carbon dioxide, carbonic acid, metallic carbides or carbonates, and ammonium carbonate.

2.49. "Oven" means a chamber within which heat is used to bake, cure, polymerize, and/or dry a coating.

2.50. "Overall emission reduction efficiency" means the weight per unit time of VOC removed or destroyed by a control device divided by the weight per unit time of VOC generated by a source, expressed as a percentage. The overall emission reduction efficiency is the product of the capture efficiency and the control device destruction or removal efficiency.

2.51. "Owner or operator" means any person who owns, leases, controls, operates, or supervises a facility, a source, or air pollution control or monitoring equipment.

2.52. "Person" means any and all persons, natural or artificial, including any municipal, public or private corporation organized or existing under the laws of this or any other state or country, and any firm, partnership, or association of whatever nature.

2.53. "Petroleum" means crude oil and the oils derived from tar sands, shale, and coal.

2.54. "Petroleum liquid" means crude oil, condensate, and any finished or intermediate product manufactured or extracted at a petroleum refinery, but not including Nos. 2 through 6 fuel oils as specified in ASTM D396-78; gas turbine fuel oils Nos. 2-GT through 4-GT as specified in ASTM D2880-78; or diesel fuel oils Nos. 2-d and 4-D, as specified in ASTM D975-78.

2.55. "Petroleum refinery" means any facility engaged in producing gasoline, kerosene, distillate fuel oils, residual fuel oils, lubricants, or other products through distillation of petroleum or through the redistillation, cracking, or reforming of unfinished

petroleum derivatives.

2.56. "Plastisol" means a coating made of a mixture of finely divided resin and a plasticizer. Plastisol is applied as a thick gel that solidifies when heated.

2.57. "Pressure release" means the emission of materials resulting from system pressure being greater than set pressure of the pressure relief device.

2.58. "Prime coat" means the first of two or more coatings applied to a surface.

2.59. "Process unit shutdown" means a work practice or operational procedure that stops production from a process unit or part of a process unit. An unscheduled work practice or operational procedure that stops production from a process unit or part of a process unit for less than 24 hours is not a process unit shutdown. The use of spare equipment and technically feasible bypassing of equipment without stopping production are not process unit shutdowns.

2.60. "Reasonably Available Control Technology" (also denoted as RACT) means the lowest emission limit that a particular source is capable of meeting by the application of control technology that is reasonably available considering technological and economic feasibility. It may require technology that has been applied to similar, but not necessarily identical, source categories.

2.61. "Reid vapor pressure" means the absolute vapor pressure of volatile crude oil and volatile non-viscous petroleum liquids, except liquified petroleum gases, as determined by American Society for Testing and Materials, D323-72.

2.62. "Repaired" means that equipment is adjusted, or otherwise altered, in order to eliminate a leak as indicated by one of the following: an instrument reading of 10,000 parts per million (ppm) or greater, indication of liquids dripping, or indication by a sensor that a seal or barrier fluid system has failed.

2.63. "Roll coating" means the application of a coating material to a moving substrate by means of hard rubber, elastomeric, or metal rolls.

2.64. "Rotogravure coating" means the application of a coating material to a substrate by means of a roll coating technique in which the pattern to be applied is recessed relative to the non-image area, and the coating material is picked up in these recessed areas and is transferred to the substrate.

2.65. "Solvent" means a substance that is liquid at standard conditions and is used to dissolve or dilute another substance; this term includes, but is not limited to, organic materials used as dissolvers, viscosity reducers, degreasing agents, or cleaning agents.

2.66. "Source" means any building, structure, equipment, or installation that

directly or indirectly releases or discharges, or has the potential to release or discharge, VOCs into the ambient air.

2.67. "Standard conditions" means a temperature of 20°C (68°F) and pressure of 760 millimeters of Mercury (mm Hg) (29.92 in Hg).

2.68. "Startup" means the setting in operation of a source or of its emission control or emission monitoring equipment.

2.69. "Submerged fill" means the method of filling a gasoline tank truck or storage vessel where product enters within 150 millimeters (mm) (5.9 inches [in]) of the bottom of the tank truck or storage vessel. Bottom filling of tank trucks and storage vessels is included in this definition.

2.70. "Substrate" means the surface onto which a coating is applied or into which a coating is impregnated.

2.71. "Topcoat" means the final coating(s), as applied, in a multiple-coat operation.

2.72. "True vapor pressure" means the equilibrium partial pressure exerted by a volatile organic liquid as determined in accordance with methods described in American Petroleum Institute Bulletin 2517, "Evaporation Loss From Floating Roof Tanks," second edition, February 1980.

2.73. "U.S. EPA" means the United States Environmental Protection Agency.

2.74. "Vapor balance system" means a closed system that allows the transfer or balancing of vapors, displaced during the loading or unloading of gasoline, from the tank being loaded to the tank being unloaded.

2.75. "Vapor collection system" means all piping, seals, hoses, connections, pressure-vacuum vents, and other equipment between the gasoline tank truck and the vapor processing unit and/or the storage tanks and vapor holder.

2.76. "Vapor control system" means a system that limits or prevents release to the atmosphere of organic compounds in the vapors displaced from a tank during the transfer of gasoline.

2.77. "Vapor recovery system" means a vapor gathering system capable of collecting VOC vapors and gases emitted during the operation of any transfer, storage, or process equipment.

2.78. "Vapor-tight" means equipment that allows no loss of vapors. Compliance with vapor-tight requirements can be determined by checking to ensure that the

concentration at a potential leak source is not equal to or greater than 100 percent of the lower explosive limit (LEL) when measured with a combustible gas detector, calibrated with propane, at a distance of 2.54 centimeters (cm) (1 inch [in]) from the source.

2.79. "Vapor-tight gasoline tank truck" means a gasoline tank truck that has demonstrated within the 12 preceding months that its product delivery tank will sustain a pressure change of not more than 75 mm (3.0 in) of water within 5 minutes (min) after it is pressurized to 450 mm (18 in) of water; or when evacuated to 150 mm (5.9 in) of water, the same tank will sustain a pressure change of not more than 75 mm (3.0 in) of water within 5 min. This capability is to be demonstrated using the test procedures specified in Method 27 of Appendix A of 40 CFR Part 60.

2.80. "Volatile organic compound" (also denoted as VOC) means any organic compound that participates in atmospheric photochemical reactions. This includes any organic compound other than the following exempt compounds: methane, ethane, acetone, perchloroethylene, methyl chloroform (1,1,1-trichloroethane), CFC-113 (trichlorotrifluoroethane), methylene chloride, CFC-11 (trichlorofluoromethane), CFC-12 (dichlorodifluoromethane), CFC-22 (chlorodifluoromethane), FC-23 (trifluoromethane), CFC-114 (dichlorotetrafluoroethane), CFC-115 (chloropentaflouroethane), HCFC-123 (dichlorotrifluoroethane), HFC-134a (tetrafluoroethane), HCFC-141b (dichlorofluoroethane), HCFC-142b (chlorodifluoroethane), 2-chloro-1,1,1,2-tetrafluoroethane (HCFC-124), pentafluoroethane (HFC-125); 1,1,2,2-tetrafluoroethane (HFC-134); 1,1,1-trifluoroethane (HFC-143a); 1,1-difluoroethane (HFC-152a); and perfluorocarbon compounds which fall into these classes--

a. Cyclic, branched, or linear, completely fluorinated alkanes;

b. Cyclic, branched, or linear, completely fluorinated ethers with no unsaturations;

c. Cyclic, branched, or linear, completely fluorinated tertiary amines with no unsaturations; and

d. Sulfur-containing perfluorocarbons with no unsaturations and with sulfur bonds only to carbon and fluorine.

Any organic compounds that the U.S. EPA lists in Federal Register notices as being photochemically nonreactive are also included as exempt compounds. For purposes of determining compliance with emission limits, VOC will be measured by the test methods approved by the U.S. EPA. Where such a method also inadvertently measures compounds with negligible photochemical reactivity, an owner or operator may exclude these negligibly reactive compounds when determining compliance with an emissions standard.

2.81. "Web coating line" means all of the coating applicator(s), drying area(s), or oven(s), located between an unwind station and a rewind station, that are used to apply

coating onto a continuous strip of substrate (the web). A web coating line need not have a drying oven.

§45-21-3. Applicability.

3.1. All new and modified sources shall meet any applicable State or Federal rules for existing sources.

3.2. Nothing in this regulation shall be construed to exempt new and modified sources from meeting any other applicable State or Federal rules, including new source review requirements.

3.3. This regulation does not apply to any equipment at a facility used exclusively for chemical or physical analysis or determination of product quality and commercial acceptance provided the operation of the equipment is not an integral part of the production process and the total actual VOC emissions from all such equipment at the facility do not exceed 204 kilograms (kg) (450 pounds [lb]) in any calendar month.

3.4. a. Any facility that becomes subject to the provisions of this regulation by exceeding an applicability threshold shall remain subject to these provisions, even if its throughput or emissions later fall below the applicability threshold, except as provided in section 3.7.

b. Any facility that is currently subject to a State or Federal rule imposing control requirements for VOCs promulgated pursuant to the Clean Air Act Amendments of 1977 by exceeding an applicability threshold is and will remain subject to these provisions, even if its throughput or emissions have fallen or later fall below the applicability threshold, except as provided in section 3.7.

3.5. The owner or operator of any facility that claims exemption from the provisions of this regulation by reason of meeting the conditions in section 3.3 shall maintain the following records in a readily accessible location for at least 3 years and shall make those records available to the Director upon verbal or written request:

a. Records to document the purpose of the equipment for which the exemption is claimed.

b. Records to document the amount of each volatile organic compound (VOC)-containing material used in the equipment each calendar month and the VOC content of each material such that emissions can be determined.

3.6. The owner or operator of a facility or source subject to any control requirement of this regulation may comply with an alternative control plan that has been approved by the Director and the U.S. EPA.

3.7. The owner or operator of a facility subject to this regulation may petition the Director for exemption from the requirements of this regulation upon a showing that such facility no longer has the potential to emit volatile organic compounds. Any exemption granted shall be embodied in a consent order which shall contain terms and conditions

necessary to ensure that no volatile organic compound may be emitted from the facility. For federal enforcement purposes, such exemption shall not be effective until approved by the U.S. EPA.

§45-21-4. Compliance Certification, Recordkeeping, and Reporting Procedures for Coating Sources.

4.1. To establish the records required under this section 4., the volatile organic compound (VOC) content of each coating, as applied, and the efficiency of each capture system and control device shall be determined by the applicable test methods and procedures specified in sections 42. and 44.

4.2. Requirements for coating sources exempt from emission limitations. -- Any owner or operator of a coating line or operation that is exempt from the emission limitations of sections 11. through 19. because combined VOC emissions from all coating lines and operations at the facility are below the applicability threshold specified in the individual sections of this regulation, before the application of capture systems and control devices, shall comply with the following for each of sections 11. through 19. from which the owner or operator claims an exemption:

a. Certification. -- By one year from May 31, 1993, the owner or operator of a facility referenced in section 4.2. shall certify to the Director that the facility is exempt by providing the following:

1. Name and location of the facility;

2. Address and telephone number of the person responsible for the facility;

3. A declaration that the facility is exempt from the emission limitations of sections 11. through 19. because combined VOC emissions from all coating lines and operations at the facility are below the applicability threshold before the application of capture systems and control devices; and

4. Calculations of the daily-weighted average that demonstrate that the combined VOC emissions from all coating lines and operations at the facility for a day representative of current maximum production levels are 6.8 kilograms (kg) (15 pounds [lb]) or less before the application of capture systems and control devices. The following equation shall be used to calculate total VOC emissions for that day:

$$T = \sum_{i=1}^{n} A_i \, B_i$$

where:

T = Total VOC emissions from coating lines and operations at the facility before the application of capture systems and control devices in units of kg/day (lb/day);

n = Number of different coatings applied on each coating line or each operation

at the facility;

i = Subscript denoting an individual coating;

A_i = Mass of VOC per volume of coating (i) (minus water and exempt compounds), as applied, used at the facility in units of kilograms VOC per liter (kg VOC/L) (pounds VOC per gallon [lb VOC/gal]); and

B_i = Volume of coating (i) (minus water and exempt compounds), as applied, used at the facility in units of liters per day (L/day) (gallons per day [gal/day]). The instrument or method by which the owner or operator accurately measured or calculated the volume of each coating, as applied, used shall be described in the certification to the Director.

b. Recordkeeping. -- On and after one year from May 31, 1993, the owner or operator of a facility referenced in section 4.2. shall collect and record all of the following information each day and maintain the information at the facility for a period of 3 years:

1. The name and identification number of each coating, as applied;

2. The mass of VOC per volume (minus water and exempt compounds) and the volume of coating (i) (minus water and exempt compounds), as applied, used each day; and

3. The total VOC emissions at the facility, as calculated using the equation in section 4.2.a.4.

c. Reporting. -- On and after one year from May 31, 1993, the owner or operator of a facility referenced in section 4.2. shall notify the Director of any record showing that combined VOC emissions from all coating lines and operations at the coating facility exceed 6.8 kg (15 lb) on any day, before the application of capture systems and control devices. A copy of such record shall be sent to the Director within 30 days after the exceedance occurs.

4.3. Requirements for coating sources using complying coatings. -- Any owner or operator of a coating line or operation subject to the limitations of sections 11., 12., 13., 14., 15., 16., 17., 18., or 19. and complying by means of the use of complying coatings shall comply with the following:

a. Certification. -- By one year from May 31, 1993, or upon startup of a new coating line or operation, or upon changing the method of compliance for an existing subject coating line or operation from daily-weighted averaging or control devices to the use of complying coatings, the owner or operator of a coating line or operation referenced in section 4.3. shall certify to the Director that the coating line or operation is or will be in compliance with the requirements of the applicable section of this regulation on and after one year from May 31, 1993, or on and after the initial startup date. Such certification shall include:

1. The name and location of the facility;

2. The address and telephone number of the person responsible for the facility;

3. Identification of subject sources;

4. The name and identification number of each coating, as applied, on each coating line or operation;

5. The mass of VOC per volume (minus water and exempt compounds) and the volume of each coating (minus water and exempt compounds), as applied; and

6. The time at which the facility's "day" begins if a time other than midnight local time is used to define a "day".

b. Recordkeeping. -- On and after one year from May 31, 1993, or on and after the initial startup date, the owner or operator of a coating line or operation referenced in section 4.3. and complying by the use of complying coatings shall collect and record all of the following information each day for each coating line or operation and maintain the information at the facility for a period of 3 years:

1. The name and identification number of each coating, as applied, on each coating line or operation; and

2. The mass of VOC per volume of each coating (minus water and exempt compounds), as applied, used each day on each coating line or operation.

c. Reporting. -- On and after one year from May 31, 1993, the owner or operator of a subject coating line or operation referenced in section 4.3. shall notify the Director in the following instances:

1. Any record showing use of any non-complying coatings shall be reported by sending a copy of such record to the Director within 30 days following that use; and

2. At least 30 calendar days before changing the method of compliance from the use of complying coatings to daily-weighted averaging or control devices, the owner or operator shall comply with all requirements of section 4.4.a. or section 4.5.a., respectively. Upon changing the method of compliance from the use of complying coatings to daily-weighted averaging or control devices, the owner or operator shall comply with all requirements of the section of this regulation applicable to the coating line or operation referenced in section 4.3.

4.4. Requirements for coating sources using daily-weighted averaging. -- Any owner or operator of a coating line or operation subject to the limitations of sections 11., 12., 13., 14., 15., 16., 17., 18., or 19. and complying by means of daily-weighted averaging on that line or operation shall comply with the following:

a. Certification. -- By one year from May 31, 1993, or upon startup of a new coating line or operation, or upon changing the method of compliance for an existing subject coating line or operation from the use of complying coatings or control devices to daily-weighted averaging, the owner or operator of the subject coating line or operation shall certify to the Director that the coating line or operation is or will be in compliance with section 4.4. on and after one year from May 31, 1993, or on and after the initial startup date. Such certification shall include:

1. The name and location of the facility;

2. The address and telephone number of the person responsible for the facility;

3. Identification of subject sources;

4. The name and identification number of each coating line or operation which will comply by means of daily-weighted averaging;

5. The instrument or method by which the owner or operator will accurately measure or calculate the volume of each coating (minus water and exempt compounds), as applied, used each day on each coating line or operation;

6. The method by which the owner or operator will create and maintain records each day as required in section 4.4.b.;

7. An example of the format in which the records required in section 4.4.b. will be kept;

8. Calculation of the daily-weighted average, using the procedure in section 43.1., for a day representative of current or projected maximum production levels; and

9. The time at which the facility's "day" begins if a time other than midnight local time is used to define a "day".

b. Recordkeeping. -- On and after one year from May 31, 1993, or on and after the initial startup date, the owner or operator of a coating line or operation referenced in section 4.4. and complying by means of daily-weighted averaging shall collect and record all of the following information each day for each coating line or operation and maintain the information at the facility for a period of 3 years:

1. The name and identification number of each coating, as applied, on each coating line or operation;

2. The mass of VOC per volume (minus water and exempt compounds) and the volume of each coating (minus water and exempt compounds), as applied, used each day on each coating line or operation; and

3. The daily-weighted average VOC content of all coatings, as applied, on each coating line or operation calculated according to the procedure in section 43.1.

c. Reporting. -- On and after one year from May 31, 1993, the owner or operator of a subject coating line or operation referenced in section 4.4. shall notify the Director in the following instances:

1. Any record showing noncompliance with the applicable daily-weighted average requirements shall be reported by sending a copy of the record to the Director within 30 days following the occurrence, except as provided in section 9.3.

2. At least 30 calendar days before changing the method of compliance from daily-weighted averaging to the use of complying coatings or control devices, the owner or operator shall comply with all requirements of section 4.3.a. or section 4.5.a., respectively. Upon changing the method of compliance from daily-weighted averaging to the use of complying coatings or control devices, the owner or operator shall comply with all requirements of the section of this regulation applicable to the coating line or operation referenced in section 4.4. of this section.

4.5. Requirements for coating sources using control devices. -- Any owner or operator of a coating line or operation subject to the limitations of sections 11., 12., 13., 14., 15., 16., 17., 18., or 19. and complying by means of control devices shall comply with the following:

a. Testing of control equipment. -- By one year from May 31, 1993, or upon startup of a new coating line or operation, or upon changing the method of compliance for an existing coating line or operation from the use of complying coatings or daily-weighted averaging to control devices, the owner or operator of the subject coating line or operation shall perform a compliance test. Testing shall be performed pursuant to the procedures in sections 41. through 44. The owner or operator of the subject coating line or operation shall submit to the Director the results of all tests and calculations necessary to demonstrate that the subject coating line or operation is or will be in compliance with the applicable section of this regulation on and after one year from May 31, 1993, or on and after the initial startup date.

b. Recordkeeping. -- On and after one year from May 31, 1993, or on and after the initial startup date, the owner or operator of a coating line or operation referenced

in section 4.5. shall collect and record all of the following information each day for each coating line or operation and maintain the information at the facility for a period of 3 years:

1. The name and identification number of each coating used on each coating line or operation;

2. The mass of VOC per unit volume of coating solids, as applied, the volume solids content, as applied, and the volume, as applied, of each coating used each day on each coating line or operation;

3. The maximum VOC content (mass of VOC per unit volume of coating solids, as applied) or the daily-weighted average VOC content (mass of VOC per unit volume of coating solids, as applied) of the coatings used each day on each coating line or operation;

4. The required overall emission reduction efficiency for each day for each coating line or operation as determined in sections 11.5.c., 12.5.c., 13.5.c., 14.5.c., 15.5.c., 16.5.c., 17.5.c., 18.5.c., or 19.5.c.;

5. The actual overall emission reduction efficiency achieved for each day for each coating line or operation as determined in section 44.3.;

6. Control device monitoring data;

7. A log of operating time for the capture system, control device, monitoring equipment, and the associated coating line or operation;

8. A maintenance log for the capture system, control device, and monitoring equipment detailing all routine and non-routine maintenance performed including dates and duration of any outages;

9. For thermal incinerators, all 3-hour periods of operation in which the average combustion temperature was more than 28°C (50°F) below the average combustion temperature during the most recent performance test that demonstrated that the facility was in compliance;

10. For catalytic incinerators, all 3-hour periods of operation in which the average temperature of the process vent stream immediately before the catalyst bed is more than 28°C (50°F) below the average temperature of the process vent stream during the most recent performance test that demonstrated that the facility was in compliance; and

11. For carbon adsorbers, all 3-hour periods of operation during which the average VOC concentration or reading of organics in the exhaust gases is more than 20 percent greater than the average exhaust gas concentration or reading measured by the organics monitoring device during the most recent determination of the recovery efficiency of the carbon adsorber that demonstrated that the facility was in compliance.

c. Reporting. -- On and after one year from May 31, 1993, the owner or operator of a subject coating line or operation referenced in section 4.5. shall notify the Director in the following instances:

1. Any record showing noncompliance with the applicable requirements for control devices shall be reported by sending a copy of the record to the Director within 30 days following the occurrence, except as provided in section 9.3.

2. At least 30 calendar days before changing the method of compliance from control devices to the use of complying coatings or daily-weighted averaging, the owner or operator shall comply with all requirements of section 4.3.a. or section 4.4.a., respectively. Upon changing the method of compliance from control devices to the use of complying coatings or daily-weighted averaging, the owner or operator shall comply with all requirements of the section of this regulation applicable to the coating line or operation referenced in section 4.5.

§45-21-5. Compliance Certification, Recordkeeping, and Reporting Requirements for Non-Coating Sources.

5.1. Initial compliance certification. -- The owner or operator of any facility containing sources subject to this section 5. shall submit to the Director an initial compliance certification by one year from May 31, 1993. The owner or operator of any new facility containing sources that become subject to this section 5. after May 31, 1993 shall submit an initial compliance certification immediately upon start-up of the facility.

a. The initial compliance certification shall provide as a minimum the following information:

1. The name and location of the facility;

2. The address and telephone number of the person responsible for the facility; and

3. Identification of subject sources.

b. For each subject source, the initial compliance certification shall also provide as a minimum:

1. The applicable emission limitation, equipment specification, or work practice;

2. The method of compliance;

3. For each source subject to numerical emission limitations, the estimated emissions without control;

4. The control system(s) in use;

5. The design performance efficiency of the control system;

6. For each source subject to numerical emission limitations, the estimated emissions after control;

7. Certification that all subject sources at the facility are in compliance with the applicable emission limitation, equipment specification, or work practice; and

8. The time at which the facility's "day" begins if a time other than midnight local time is used to define a "day".

5.2. Reports of excess emissions. -- Except as provided in section 9.3., the owner

or operator of any facility containing sources subject to this section 5. shall, for each occurrence of excess emissions expected to last more than 7 days, within 1 business day of becoming aware of such occurrence, supply the Director by letter with the following information:

a. The name and location of the facility;

b. The subject sources that caused the excess emissions;

c. The time and date of first observation of the excess emissions; and

d. The cause and expected duration of the excess emissions.

e. For sources subject to numerical emission limitations, the estimated rate of emissions (expressed in the units of the applicable emission limitation) and the operating data and calculations used in determining the magnitude of the excess emissions; and

f. The proposed corrective actions and schedule to correct the conditions causing the excess emissions.

5.3. Requirements for sources using control devices. --

a. Initial compliance certification of control equipment. Testing of control equipment. -- By one year from May 31, 1993, or upon startup of a new source, or upon changing the method of compliance for an existing source, the owner or operator of the subject source shall perform all tests pursuant to the procedures in sections 41. and 44. and submit to the Director the results of all tests and calculations necessary to demonstrate that the subject source will be in compliance with the applicable section of this regulation on and after one year from May 31, 1993, or on and after the initial startup date.

b. Recordkeeping.

1. Each owner or operator of a source subject to this section 5. shall maintain up-to-date, readily accessible records of any equipment operating parameters specified to be monitored in the applicable section of this regulation as well as up-to-date, readily accessible records of periods of operation during which the parameter boundaries established during the most recent performance test are exceeded. These records shall be maintained for at least 3 years. The Director may at any time require a report of these data. Periods of operation during which the parameter boundaries established during the most recent performance tests are exceeded are defined as follows:

A. For thermal incinerators, all 3-hour periods of operation in which the average combustion temperature was more than 28°C (50°F) below the average combustion temperature during the most recent performance test that demonstrated that the

facility was in compliance.

B. For catalytic incinerators, all 3-hour periods of operation in which the average temperature of the process vent stream immediately before the catalyst bed is more than 28°C (50°F) below the average temperature of the process vent stream during the most recent performance test that demonstrated that the facility was in compliance.

C. For carbon adsorbers, all 3-hour periods of operation during which the average VOC concentration or reading of organics in the exhaust gases is more than 20 percent greater than the average exhaust gas concentration or reading measured by the organics monitoring device during the most recent determination of the recovery efficiency of the carbon adsorber that demonstrated that the facility was in compliance.

2. A log of operating time for the capture system, control device, monitoring equipment, and the associated source; and

3. A maintenance log for the capture system, control device, and monitoring equipment detailing all routine and non-routine maintenance performed including dates and duration of any outages.

§45-21-6. Requirements for Sources Complying by Use of Control Devices.

6.1. Any owner or operator of a coating line or operation subject to this section 6. shall ensure that:

a. A capture system and control device are operated at all times that the line is in operation, and the owner or operator demonstrates compliance with this section through the applicable coating analysis and capture system and control device efficiency test methods specified in sections 42. and 44.; and

b. The control device is equipped with the applicable monitoring equipment specified in section 44.2., and the monitoring equipment is installed, calibrated, operated, and maintained according to the vendor's specifications at all times the control device is in use.

§45-21-7. Circumvention.

7.1. No owner or operator subject to this regulation shall build, erect, install, or use any article, machine, equipment, process, or other method the use of which conceals emissions that would otherwise constitute non-compliance with an applicable regulation.

7.2. Section 7.1. includes, but is not limited to, the use of gaseous diluents to achieve compliance, and the piecemeal carrying out of an operation to avoid coverage by a regulation that applies only to operations larger than a specified size.

7.3. No owner or operator subject to this regulation shall discharge or dispose of VOCs or material containing VOCs to surface impoundments, pits, wastewater treatment facilities, or sewers for the purpose of circumventing any provision or requirement of this regulation.

§45-21-8. Handling, Storage, and Disposal of Volatile Organic Compounds (VOCs).

8.1. No owner or operator of a facility subject to the requirements of sections 11. through 20. and section 34. shall cause, allow, or permit the disposal of any volatile organic compound (VOC), or of any materials containing any VOC, at that facility in any 1 day in a manner that would permit the evaporation of more than 6.8 kilograms (kg) (15 pounds [lb]) of VOC into the ambient air. This provision does not apply to coating sources that are specifically exempt from the emission limitations of sections 11. through 20. and section 34.

8.2. No owner or operator of a facility subject to this section 8. shall use open containers for the storage or disposal of cloth or paper impregnated with VOCs that are used for surface preparation, cleanup, or coating removal.

8.3. No owner or operator of a facility subject to this section 8. shall store in open containers spent or fresh VOC to be used for surface preparation, cleanup or coating removal.

8.4. No owner or operator of a facility subject to this section 8. shall use VOCs for the cleanup of spray equipment unless equipment is used to collect the cleaning compounds and to minimize their evaporation to the atmosphere.

§45-21-9. Compliance Programs, Registration, Variance, Permits, Enforceability.

9.1. Extended compliance programs and schedules. -- For sources as a result of this regulation that are required to make major process changes and/or major capital expenditures, as determined by the Director, an acceptable program to comply with this regulation shall be developed and submitted to the Director by the owner and/or operator of such source within 180 days of May 31, 1993. The program shall include the dates for ordering, receiving, installation, and start-up of necessary equipment. All such programs shall be embodied in an order or permit and approved by the Director. All such orders or permits shall contain a schedule and timetable for compliance certification, including increments of progress which will require compliance with the applicable requirements as expeditiously as practicable, but not later than December 31, 1996.

9.2. Registration. -- Within 30 days after May 31, 1993 all persons owning and/or operating a source subject to this regulation and not previously registered shall have registered such source(s) with the Director: Provided, that on a case-by case basis, the Director may extend the 30-day period for the registration of sources to allow sources up to one hundred eighty (180) days after May 31, 1993 to register. The information required for registration shall be determined and provided in the manner specified by the Director. Registration forms shall be requested from the Director by the owner or operator of such source(s).

9.3. Variance. -- If the provisions of this regulation cannot be satisfied due to repairs made as the result of routine maintenance or in response to the unavoidable malfunction of equipment, the Director may permit the owner or operator of a source subject to this regulation to continue to operate said source for periods not to exceed 10 days upon specific application to the Director. Such application shall be made prior to the making of repairs and, in the case of equipment malfunction, within 24 hours of the equipment malfunction. Where repairs will take in excess of 10 days to complete, additional time periods may be granted by the Director. In cases of major equipment failure, additional time periods may be granted by the Director provided a corrective program has been submitted by the owner or operator and approved by the Director. During such time periods, the owner or operator shall take all reasonable and practicable steps to minimize VOC emissions.

9.4. Permits. -- After May 31, 1993, no person shall construct or modify any source subject to this regulation without first obtaining a permit for such construction or modification pursuant to regulations of the Director.

9.5. Enforceability. -- For the purpose of federal enforceability of the provisions of this regulation which are adopted and incorporated in the state implementation plan, references to the Director shall also mean the Administrator of the U.S. EPA.

9.6. Severability. -- The provisions of this regulation are severable and if any provision or part thereof shall be held invalid, unconstitutional, or inapplicable to any person or circumstance, such invalidity, unconstitutionality, or inapplicability shall not affect or

impair any of the remaining provisions, sections, or parts of this regulation or their application to any persons and circumstances.

§45-21-10. [RESERVED]

§45-21-11. Can Coating.

11.1. Applicability.

a. This section 11. applies to any can coating line used to apply the following coatings: sheet base coat, exterior base coat, interior body spray coat, overvarnish, side seam spray coat, exterior end coat, and end sealing compound coat.

b. The emission limits of this section 11. do not apply to coating lines within any facility whose actual emissions without control devices from all can coating lines within the facility are less than 6.8 kilograms (kg) (15 pounds [lb]) volatile organic compound (VOC) per day. An owner or operator of a facility whose emissions are below this applicability threshold shall comply with the certification, recordkeeping, and reporting requirements of section 11.7.a.

11.2. Definitions. -- As used in this section 11., all terms not defined herein shall have the meaning given them in section 2.

a. "Can" means any cylindrical single walled container, with or without a top, cover, spout, and/or handle, that is manufactured from metal sheets thinner than 29 gauge (0.0141 inches [in]) and into which solid or liquid materials are packaged.

b. "Can coating line" means a coating line in which any coating is applied onto the surface of cans or can components.

c. "End sealing compound coat" means a compound applied onto can ends that functions as a gasket when the end is assembled onto the can.

d. "Exterior base coat" means a coating applied to the exterior of a two-piece can body to provide protection to the metal or to provide background for any lithographic or printing operation.

e. "Interior body spray coat" means a coating applied to the interior of the can body to provide a protective film between the product and the can.

f. "Overvarnish" means a coating applied directly over a design coating or directly over ink to reduce the coefficient of friction, to provide gloss, and to protect the finish against abrasion and corrosion.

g. "Sheet basecoat" means a coating applied to metal in sheet form to serve as either the exterior or interior of two-piece or three-piece can bodies or can ends.

h. "Side-seam spray coat" means a coating applied to the seam of a three-piece can.

i. "Three-piece can" means a can that is made by rolling a rectangular

sheet of metal into a cylinder that is soldered, welded, or cemented at the seam and attaching two ends.

j. "Two-piece can" means a can whose body and one end are formed from a shallow cup and to which the other end is later attached.

k. "Two-piece can exterior end coat" means a coating applied by roller coating or spraying to the exterior end of a two-piece can to provide protection to the metal.

11.3. Standards.

a. No owner or operator of a can coating line subject to this section 11. shall cause or allow the application of any coating on that line with VOC content, as applied, that exceeds the limits in sections 11.3.a.1. through 11.3.a.6.

		kg/L	lb/gal[a]
1.	Sheet basecoat and sheet overvarnish	0.34	2.8
2.	Exterior basecoat and overvarnish (two-piece can)	0.34	2.8
3.	Interior body spray coat	0.51	4.2
4.	Two-piece can exterior end coat	0.51	4.2
5.	Side seam spray coat	0.66	5.5
6.	End sealing compound coat	0.44	3.7

[a]VOC content values are expressed in units of mass of VOC (kg, lb) per volume of coating (liter [L], gallon [gal]), minus water and exempt compounds, as applied.

b. As an alternative to compliance with the emission limits in section 11.3.a., an owner or operator of a can coating line may comply with the requirements of this section 11. by meeting the requirements of section 11.4. or section 11.5.

11.4. Daily-weighted average limitations. -- No owner or operator of a can coating line subject to this section 11. shall apply coatings on that line, during any day, whose daily-weighted average VOC content, calculated in accordance with the procedure specified in section 43., exceeds the emission limits in section 11.3.a.

11.5. Control devices. -- An owner or operator of a can coating line subject to this section 11. shall comply with this section 11. by:

a. Installing and operating a capture system on that line;

b. Installing and operating a control device on that line;

c. Determining for each day the overall emission reduction efficiency needed to demonstrate compliance. The overall emission reduction needed for a day is the lesser of the value calculated according to the procedure in section 43.2. for that day or 95 percent; and

d. Demonstrating each day that the overall emission reduction efficiency achieved for that day, as determined in section 44.3., is greater than or equal to the overall emission reduction efficiency required for that day.

11.6. Test methods. -- The test methods found in sections 41. through 44. shall be used to determine compliance with this section 11.

11.7. Recordkeeping and reporting.

a. An owner or operator of a can coating line that is exempt from the emission limitations in section 11.3. shall comply with the certification, recordkeeping, and reporting requirements in section 4.2.

b. An owner or operator of a can coating line subject to this section 11. and complying with section 11.3. by the use of complying coatings shall comply with the certification, recordkeeping, and reporting requirements in section 4.3.

c. An owner or operator of a can coating line subject to this section 11. and complying with section 11.4. by daily-weighted averaging shall comply with the certification, recordkeeping, and reporting requirements in section 4.4.

d. An owner or operator of a can coating line subject to this section 11. and complying with section 11.5. by the use of control devices shall comply with the testing, reporting, and recordkeeping requirements in section 4.5.

§45-21-12. Coil Coating.

12.1. Applicability.

a. This section 12. applies to any coil coating operation.

b. This section 12. does not apply to any coating operation within a facility whose actual emissions without control devices from all coil coating operations within the facility are less than 6.8 kilograms (kg) (15 pounds [lb]) volatile organic compound (VOC) per day. An owner or operator of a facility whose emissions are below this applicability threshold shall comply with the certification, recordkeeping, and reporting requirements of section 12.7.a.

12.2. Definitions. -- As used in this section 12., all terms not defined herein shall have the meaning given them in section 2.

a. "Coil" means any continuous metal strip with thickness of 0.15 millimeter (mm) (0.006 inch [in]) or more that is packaged in a roll or coil.

b. "Coil coating line" means a web coating line where coating is applied to coil.

c. "Coil coating operation" means a coating application station and its associated flashoff area, drying area, and/or drying oven wherein coating is applied and dried or cured on a coil coating line. A coil coating line may include more than one coil coating operation.

12.3. Standards.

a. No owner or operator of a coil coating operation subject to this section 12. shall cause or allow the application of any coating on that operation with VOC content in excess of 0.31 kilograms per liter (kg/L) (2.6 pounds per gallon [lb/gal]) of coating, minus water and exempt compounds, as applied.

b. As an alternative to compliance with the emission limit in section 12.3.a., an owner or operator of a coil coating operation may meet the requirements of section 12.4. or section 12.5.

12.4. Daily-weighted average limitation. -- No owner or operator of a coil coating operation subject to this section 12. shall apply coatings on that operation, during any day, whose daily-weighted average VOC content, calculated in accordance with the procedure specified in section 43., exceeds the emission limit in section 12.3.a.

12.5. Control devices. -- An owner or operator of a coil coating operation subject to this section 12. shall comply with this section 12. by:

a. Installing and operating a capture system on that operation;

b. Installing and operating a control device on that operation;

c. Determining for each day the overall emission reduction efficiency needed to demonstrate compliance. The overall emission reduction needed for a day is the lesser of the value calculated according to the procedure in section 43.2. for that day or 95 percent; and

d. Demonstrating each day that the overall emission reduction efficiency achieved for that day, as determined in section 44.3., is greater than or equal to the overall emission reduction efficiency required for that day.

12.6. Test methods. -- The test methods found in sections 41. through 44. shall be used to determine compliance with this section 12.

12.7. Recordkeeping and reporting.

a. An owner or operator of a coil coating operation that is exempt from the emission limitations in section 12.3. shall comply with the certification, recordkeeping, and reporting requirements in section 4.2.;

b. An owner or operator of a coil coating operation subject to this section 12. and complying with section 12.3. by the use of complying coatings shall comply with the certification, recordkeeping, and reporting requirements in section 4.3.

c. An owner or operator of a coil coating operation subject to this section 12. and complying with section 12.4. by daily-weighted averaging shall comply with the certification, recordkeeping, and reporting requirements in section 4.4.

d. An owner or operator of a coil coating operation subject to this section 12. and complying with section 12.5. by the use of control devices shall comply with the testing, reporting, and recordkeeping requirements in section 4.5.

§45-21-13. Paper Coating

13.1. Applicability.

a. This section 13. applies to any paper coating operation.

b. This section 13. does not apply to any coating operation within a facility whose actual emissions without control devices from all paper coating operations within the facility are less than 6.8 kilograms (kg) (15 pounds [lb]) volatile organic compound (VOC) per day. An owner or operator of a facility whose emissions are below this applicability threshold shall comply with the certification, recordkeeping, and reporting requirements of section 13.7.a.

13.2. Definitions. -- As used in this section 13., all terms not defined herein shall have the meaning given them in section 2.

a. "Paper coating line" means a web coating line where coating is applied to paper. Printing presses are not considered paper coating lines. Products produced on a paper coating line include, but are not limited to, adhesive tapes and labels, book covers, post cards, office copier paper, drafting paper, and pressure sensitive tapes. Paper coating lines include, but are not limited to, application by impregnation or saturation or by the use of roll, knife, or rotogravure coating.

b. "Paper coating operation" means a coating application station and its associated flashoff area, drying area, and/or oven wherein coating is applied and dried or cured on a paper coating line. A paper coating line may include more than one paper coating operation.

13.3. Standards.

a. No owner or operator of a paper coating operation subject to this section 13. shall cause, allow, or permit the application of any coating on that operation with VOC content in excess of 0.35 kilograms per liter (kg/L) (2.9 pounds per gallon [lb/gal]) of coating, minus water and exempt compounds, as applied.

b. As an alternative to compliance with the emission limit in section 13.3.a., an owner or operator of a paper coating operation subject to this section 13. may meet the requirements of section 13.4. or section 13.5.

13.4. Daily-weighted average limitation. -- No owner or operator of a paper coating operation subject to this section 13. shall apply coatings on that operation, during any day, whose daily-weighted average VOC content, calculated in accordance with the procedure specified in section 43., exceeds the emission limit in section 13.3.a.

13.5. Control devices. -- An owner or operator of a paper coating operation subject

to this section 13. shall comply with this section 13. by:

a. Installing and operating a capture system on that operation;

b. Installing and operating a control device on that operation;

c. Determining for each day the overall emission reduction efficiency needed to demonstrate compliance. The overall emission reduction needed for a day is the lesser of the value calculated according to the procedure in section 43.2. for that day or 95 percent; and

d. Demonstrating each day that the overall emission reduction efficiency achieved for that day, as determined in section 44.3., is greater than or equal to the overall emission reduction efficiency required for that day.

13.6. Test methods. -- The test methods found in sections 41. through 44. shall be used to determine compliance with this section 13.

13.7. Recordkeeping and reporting.

a. An owner or operator of a paper coating operation that is exempt from the emission limitations in section 13.3. shall comply with the certification, recordkeeping, and reporting requirements in section 4.2.

b. An owner or operator of a paper coating operation subject to this section 13. and complying with section 13.3. by the use of complying coatings shall comply with the certification, recordkeeping, and reporting requirements in section 4.3.

c. An owner or operator of a paper coating operation subject to this section 13. and complying with section 13.4. by daily-weighted averaging shall comply with the certification, recordkeeping, and reporting requirements in section 4.4.

d. An owner or operator of a paper coating operation subject to this section 13. and complying with section 13.5. by the use of control devices shall comply with the testing, reporting, and recordkeeping requirements in section 4.5.

§45-21-14. Fabric Coating.

14.1. Applicability.

a. This section 14. applies to any fabric coating operation.

b. This section 14. does not apply to any coating operation within a facility whose actual emissions without control devices from all fabric coating operations within the facility are less than 6.8 kilograms (kg) (15 pounds [lb]) volatile organic compound (VOC) per day. An owner or operator of a facility whose emissions are below this applicability threshold shall comply with the certification, recordkeeping, and reporting requirements of section 14.7.a.

14.2. Definitions. -- As used in this section 14., all terms not defined herein shall have the meaning given them in section 2.

a. "Fabric coating line" means a web coating line where coating is applied to fabric. A fabric printing line is not considered a fabric coating line.

b. "Fabric coating operation" means a coating application station and its associated flashoff area, drying area, and/or oven wherein coating is applied and dried or cured in a fabric coating line. A fabric coating line may include more than one fabric coating operation.

14.3. Standards.

a. No owner or operator of a fabric coating operation subject to this section 14. shall cause or allow the application of any coating on that operation with VOC content in excess of 0.35 kilogram per liter (kg/L) (2.9 pounds per gallon [lb/gal]) of coating, minus water and exempt compounds, as applied.

b. As an alternative to compliance with the emission limit in section 14.3.a., an owner or operator of a fabric coating operation subject to this section 14. may meet the requirements of section 14.4. or section 14.5.

14.4. Daily-weighted average limitation. -- No owner or operator of a fabric coating operation subject to this section 14. shall apply coatings on that operation, during any day, whose daily-weighted average VOC content, calculated in accordance with the procedure specified in section 43., exceeds the emission limit in section 14.3.a.

14.5. Control devices. -- An owner or operator of a fabric coating operation subject to this section 14. shall comply with this section 14. by:

a. Installing and operating a capture system on that operation;

b. Installing and operating a control device on that operation;

c. Determining for each day the overall emission reduction efficiency needed to demonstrate compliance. The overall emission reduction needed for a day is the lesser of the value calculated according to the procedure in section 43.2. of this regulation for that day or 95 percent; and

d. Demonstrating each day that the overall emission reduction efficiency achieved for that day, as determined in section 44.3., is greater than or equal to the overall emission reduction efficiency required for that day.

14.6. Test methods. -- The test methods found in sections 41. through 44. shall be used to determine compliance with this section 14.

14.7. Recordkeeping and reporting.

a. An owner or operator of a fabric coating operation that is exempt from the emission limitations in section 14.3. shall comply with the certification, recordkeeping, and reporting requirements in section 4.2.

b. An owner or operator of a fabric coating operation subject to this section 14. and complying with section 14.3. by the use of complying coatings shall comply with the certification, recordkeeping, and reporting requirements in section 4.3.

c. An owner or operator of a fabric coating operation subject to this section 14. and complying with section 14.4. by daily-weighted averaging shall comply with the certification, recordkeeping, and reporting requirements in section 4.4.

d. An owner or operator of a fabric coating operation subject to this section 14. and complying with section 14.5 by the use of control devices shall comply with the testing, reporting, and recordkeeping requirements in section 4.5.

§45-21-15. Vinyl Coating.

15.1. Applicability.

a. This section 15. applies to any vinyl coating line.

b. This section 15. does not apply to any coating line within a facility whose actual emissions without control devices from all vinyl coating lines within the facility are less than 6.8 kilograms (kg) (15 pounds [lb]) volatile organic compound (VOC) per day. An owner or operator of a facility whose emissions are below this applicability threshold shall comply with the certification, recordkeeping, and reporting requirements of section 15.7.a.

15.2. Definitions. -- As used in this section 15., all terms not defined herein shall have the meaning given them in section 2.

"Vinyl coating line" means a web coating line where a decorative, functional, or protective coating is applied to a continuous web of vinyl or vinyl-coated fabric. Lines used for coating and/or printing on vinyl and coating and/or printing on urethane are considered vinyl coating lines.

15.3. Standards.

a. No owner or operator of a vinyl coating line subject to this section 15. shall cause or allow the application of any coating on that line with VOC content in excess of 0.45 kilograms per liter (kg/L) (3.8 pounds per gallon [lb/gal]) of coating, minus water and exempt compounds, as applied.

b. As an alternative to compliance with the emission limit in section 15.3.a., an owner or operator of a vinyl coating line subject to this section 15. may meet the requirements of section 15.4. or section 15.5.

15.4. Daily-weighted average limitation. -- No owner or operator of a vinyl coating line subject to this section 15. shall apply coatings on any such line, during any day, whose daily-weighted average VOC content, calculated in accordance with the procedure specified in section 43., exceeds the emission limit in section 15.3.a.

15.5. Control devices. -- An owner or operator of a vinyl coating line subject to this section 15. shall comply with this section 15. by:

a. Installing and operating a capture system on that line;

b. Installing and operating a control device on that line;

c. Determining for each day the overall emission reduction efficiency

needed to demonstrate compliance. The overall emission reduction needed for a day is the lesser of the value calculated according to the procedure in section 43.2. for that day or 95 percent; and,

d. Demonstrating each day that the overall emission reduction efficiency achieved for that day, as determined in section 44.3., is greater than or equal to the overall emission reduction efficiency required for that day.

15.6. Test methods. -- The test methods found in sections 41. through 44. shall be used to determine compliance with this section 15.

15.7. Recordkeeping and reporting.

a. An owner or operator of a vinyl coating line that is exempt from the emission limitations in section 15.3. shall comply with the certification, recordkeeping, and reporting requirements in section 4.2.

b. An owner or operator of a vinyl coating line subject to this section 15. and complying with section 15.3. by the use of complying coatings shall comply with the certification, recordkeeping, and reporting requirements in section 4.3.

c. An owner or operator of a vinyl coating line subject to this section 15. and complying with section 15.4. by daily-weighted averaging shall comply with the certification, recordkeeping, and reporting requirements in section 4.4.

d. An owner or operator of a vinyl coating line subject to this section 15. and complying with section 15.5. by the use of control devices shall comply with the testing, reporting, and recordkeeping requirements in section 4.5.

§45-21-16. Coating of Metal Furniture.

16.1. Applicability.

a. This section 16. applies to any metal furniture coating line.

b. This section 16. does not apply to any coating line within a facility whose actual emissions without control devices from all metal furniture coating lines within the facility are less than 6.8 kilograms (kg) (15 pounds [lb]) volatile organic compound (VOC) per day. An owner or operator of a facility whose emissions are below this applicability threshold shall comply with the certification, recordkeeping, and reporting requirements of section 16.7.a.

16.2. Definitions. -- As used in this section 16., all terms not defined herein shall have the meaning given them in section 2.

a. "Metal furniture" means any furniture piece made of metal or any metal part that will be assembled with other metal, wood, fabric, plastic, or glass parts to form a furniture piece including, but not limited to, tables, chairs, waste baskets, beds, desks, lockers, benches, shelving, file cabinets, and room dividers. This definition shall not apply to the coating of miscellaneous metal parts or products.

b. "Metal furniture coating line" means a coating line in which a protective, decorative, or functional coating is applied onto the surface of metal furniture.

16.3. Standards.

a. No owner or operator of a metal furniture coating line subject to this section 16. shall cause or allow the application of any coating on that line with VOC content in excess of 0.36 kilograms per liter (kg/L) (3.0 pounds per gallon [lb/gal]) of coating, minus water and exempt compounds, as applied.

b. As an alternative to compliance with the emission limit in section 16.3.a., an owner or operator of a metal furniture coating line may meet the requirements of section 16.4. or section 16.5.

16.4. Daily-weighted average limitation. -- No owner or operator of a metal furniture coating line subject to this section 16. shall apply coatings on that line, during any day, whose daily-weighted average VOC content, calculated in accordance with the procedure specified in section 43., exceeds the emission limit in section 16.3.a.

16.5. Control devices. -- An owner or operator of a metal furniture coating line subject to this section 16. shall comply with this section 16. by:

a. Installing and operating a capture system on that line;

b. Installing and operating a control device on that line;

c. Determining for each day the overall emission reduction efficiency needed to demonstrate compliance. The overall emission reduction needed for a day is the lesser of the value calculated according to the procedure in section 43.2. for that day or 95 percent; and

d. Demonstrating each day that the overall emission reduction efficiency achieved for that day, as determined in section 44.3., is greater than or equal to the overall emission reduction efficiency required for that day.

16.6. Test methods. -- The test methods found in sections 41. through 44. shall be used to determine compliance with this section.

16.7. Recordkeeping and reporting.

a. An owner or operator of a metal furniture coating line that is exempt from the emission limitations in section 16.3. shall comply with the certification, recordkeeping, and reporting requirements in section 4.2.

b. An owner or operator of a metal furniture coating line subject to this section 16. and complying with section 16.3. by the use of complying coatings shall comply with the certification, recordkeeping, and reporting requirements in section 4.3.

c. An owner or operator of a metal furniture coating line subject to this section 16. and complying with section 16.4. by daily-weighted averaging shall comply with the certification, recordkeeping, and reporting requirements in section 4.4.

d. An owner or operator of a metal furniture coating line subject to this section 16. and complying with section 16.5. by the use of control devices shall comply with the testing, reporting, and recordkeeping requirements in section 4.5.

§45-21-17. Coating of Large Appliances.

17.1. Applicability.

a. This section 17. applies to any large appliance coating line.

b. This section 17. does not apply to:

1. Any coating line within a facility whose actual emissions without control devices from all large appliance coating lines within the facility are less than 6.8 kilograms (kg) (15 pounds [lb]) volatile organic compound (VOC) per day; or,

2. The use of quick-drying lacquers for repair of scratches and nicks that occur during assembly, provided that the volume of coating does not exceed 0.95 liter (L) (0.25 gallon [gal]) in any one 8-hour period.

c. An owner or operator of a facility whose emissions are below this applicability threshold shall comply with the certification, recordkeeping, and reporting requirements of section 17.7.a.

17.2. Definitions. -- As used in this section 17., all terms not defined herein shall have the meaning given them in section 2.

a. "Large appliance" means any residential or commercial washer, dryer, range, refrigerator, freezer, water heater, dishwasher, trash compactor, air conditioner, or other similar products under Standard Industrial Classification Code 363.

b. "Large appliance coating line" means a coating line in which any protective, decorative, or functional coating onto the surface of component metal parts (including, but not limited to, doors, cases, lids, panels, and interior parts) of large appliances.

17.3. Standards.

a. No owner or operator of a large appliance coating line subject to this section 17. shall cause or allow the application of any coating on that line with VOC content in excess of 0.34 kilograms per liter (kg/L) (2.8 pounds per gallon [lb/gal]) of coating, minus water and exempt compounds, as applied.

b. As an alternative to compliance with the emission limit in section 17.3.a., an owner or operator of a large appliance coating line subject to this section 17. may meet the requirements of section 17.4. or 17. 5.

17.4. Daily-weighted average limitation. -- No owner or operator of a large appliance coating line subject to this section 17. shall apply coatings on that line, during any day, whose daily-weighted average VOC content, calculated in accordance with the procedure

specified in section 43., exceeds the emission limit in section 17.3.a.

17.5. Control devices. -- An owner or operator of a large appliance coating line subject to this section 17. shall comply with this section 17. by:

a. Installing and operating a capture system on that line;

b. Installing and operating a control device on that line;

c. Determining for each day the overall emission reduction efficiency needed to demonstrate compliance. The overall emission reduction needed for a day is the lesser of the value calculated according to the procedure in section 43.2. for that day or 95 percent; and

d. Demonstrating each day that the overall emission reduction efficiency achieved for that day, as determined in section 44.3., is greater than or equal to the overall emission reduction efficiency required for that day.

17.6. Test methods. -- The test methods found in sections 41. through 44. shall be used to determine compliance with this section 17.

17.7. Recordkeeping and reporting.

a. An owner or operator of a large appliance coating line that is exempt from the emission limitations in section 17.3. shall comply with the certification, recordkeeping, and reporting requirements in section 4.2.

b. An owner or operator of a large appliance coating line subject to this section 17. and complying with section 17.3. by the use of complying coatings shall comply with the certification, recordkeeping, and reporting requirements in section 4.3.

c. An owner or operator of a large appliance coating line subject to this section 17. and complying with section 17.4. by daily-weighted averaging shall comply with the certification, recordkeeping, and reporting requirements in section 4.4.

d. An owner or operator of a large appliance coating line subject to this section 17. and complying with section 17.5. by the use of control devices shall comply with the testing, reporting, and recordkeeping requirements in section 4.5.

§45-21-18. Coating of Magnet Wire.

18.1. Applicability.

a. This section 18. applies to any magnet wire coating line.

b. This section 18. does not apply to any coating line within a facility whose emissions without control devices from all magnet wire coating lines within the facility are less than 6.8 kilograms (kg) (15 pounds [lb]) volatile organic compound (VOC) per day. An owner or operator of a facility whose emissions are below this applicability threshold shall comply with the certification, recordkeeping, and reporting requirements of section 18.7.a.

18.2. Definitions. -- As used in this section 18., all terms not defined herein shall have the meaning given them in section 2.

"Magnet wire coating line" means a coating line in which an electrically insulating varnish or enamel is applied onto the surface of wire for use in electrical machinery.

18.3. Standards.

a. No owner or operator of a magnet wire coating line subject to this section 18. shall cause or allow the use of any coating with VOC content in excess of 0.20 kilograms per liter (kg/L) (1.7 pounds per gallon [lb/gal]) of coating, minus water and exempt compounds, as applied.

b. As an alternative to compliance with the emission limit in section 18.3.a., an owner or operator of a magnet wire coating line subject to this section 18. may meet the requirements of section 18.4. or section 18.5.

18.4. Daily-weighted average limitation. -- No owner or operator of a magnet wire coating line subject to this section 18. shall apply coatings on that line, during any day, whose daily-weighted average VOC content, calculated in accordance with the procedure specified in section 43., exceeds the emission limit in section 18.3.a.

18.5. Control devices. -- An owner or operator of a magnet wire coating line subject to this section 18. shall comply with this section 18. by:

a. Installing and operating a capture system on that line;

b. Installing and operating a control device on that line;

c. Determining for each day the overall emission reduction efficiency needed to demonstrate compliance. The overall emission reduction needed for a day is the lesser of the value calculated according to the procedure in section 43.2. for that day or 95

percent; and

d. Demonstrating each day that the overall emission reduction efficiency achieved for that day, as determined in section 44.3., is greater than or equal to the overall emission reduction efficiency required for that day.

18.6. Test methods. -- The test methods found in sections 41. through 44. shall be used to determine compliance with this section 18.

18.7. Recordkeeping and reporting.

a. An owner or operator of a magnet wire coating line that is exempt from the emission limitations in section 18.3. shall comply with the certification, recordkeeping, and reporting requirements in section 4.2.

b. An owner or operator of a magnet wire coating line subject to this section 18. and complying with section 18.3. by the use of complying coatings shall comply with the certification, recordkeeping, and reporting requirements in section 4.3.

c. An owner or operator of a magnet wire coating line subject to this section 18. and complying with section 18.4. by daily-weighted averaging shall comply with the certification, recordkeeping, and reporting requirements in section 4.4.

d. An owner or operator of a magnet wire coating line subject to this section 18. and complying with section 18.5. by the use of control devices shall comply with the testing, reporting, and recordkeeping requirements in section 4.5.

§45-21-19. Coating of Miscellaneous Metal Parts.

19.1. Applicability.

a. This section 19. applies to any miscellaneous metal parts and products coating line.

b. This section 19. does not apply to the coating of the following metal parts and products that are covered by other sections of this regulation:

1. Automobiles and light-duty trucks;

2. Metal cans;

3. Flat metal sheets and strips in the form of rolls or coils;

4. Magnet wire for use in electrical machinery;

5. Metal furniture; and

6. Large appliances.

c. This section 19. does not apply to:

1. Exterior of completely assembled aircraft;

2. Exterior of major aircraft subassemblies, if approved by the Director and the U.S. EPA;

3. Automobile and truck refinishing;

4. Customized top coating of automobiles and trucks, if production is less than 35 vehicles per day;

5. Exterior of completely assembled marine vessels; or

6. Exterior of major marine vessel subassemblies if approved by the Director and the U.S. EPA.

d. The emission limits in this section 19. do not apply to any coating line within a facility whose actual emissions without control devices from all miscellaneous metal part and products coating lines within the facility are less than 6.8 kilograms (kg) (15 pounds [lb]) volatile organic compound (VOC) per day. An owner or operator of a facility whose emissions are below this applicability threshold shall comply with the certification, recordkeeping, and reporting requirements of section 19.7.a.

19.2. Definitions. -- As used in this section 19., all terms not defined herein shall have the meaning given them in section 2.

a. "Air-dried coating" means a coating that is dried by the use of air or forced warm air at temperatures up to 90°C (194°F).

b. "Clear coating" means a coating that (1) either lacks color and opacity or is transparent and (2) uses the surface to which it is applied as a reflective base or undertone color.

c. "Drum" means any cylindrical metal shipping container of 13- to 110-gallon capacity.

d. "Extreme environmental conditions" means any of the following: the weather all of the time, temperatures frequently above 95°C (203°F), detergents, abrasive and scouring agents, solvents, corrosive atmospheres, or similar environmental conditions.

e. "Extreme performance coatings" means coatings intended for exposure to extreme environmental conditions.

f. "Miscellaneous metal parts and products coating line" means a coating line in which a coating is applied to any miscellaneous metal parts and products.

g. "Miscellaneous parts and products" means any metal part or metal product, even if attached to or combined with a nonmetal part or product. Miscellaneous metal parts and products include, but are not limited to:

1. Large farm machinery (harvesting, fertilizing and planting machines, tractors, combines, etc.);

2. Small farm machinery (lawn and garden tractors, lawn mowers, rototillers, etc.);

3. Small appliances (fans, mixers, blenders, crock pots, dehumidifiers, vacuum cleaners, etc.);

4. Commercial machinery (office equipment, computers and auxiliary equipment, typewriters, calculators, vending machines, etc.);

5. Industrial machinery (pumps, compressors, conveyor components, fans, blowers, transformers, etc.);

6. Fabricated metal products (metal covered doors, frames, etc.);

7. Any other industrial category that coats metal parts or products

under the Standard Industrial Classification Codes of Major Group 33 (primary metal industries), Major Group 34 (fabricated metal products), Major Group 35 (nonelectric machinery), Major Group 36 (electrical machinery), Major Group 37 (transportation equipment), Major Group 38 (miscellaneous instruments), and Major Group 39 (miscellaneous manufacturing industries); and

8. Application of underbody antichip materials (e.g., underbody plastisol) and coating application operations other than prime, primer surfacer, topcoat, and final repair operations at automobile and light-duty truck assembly plants.

h. "Pail" means any cylindrical metal shipping container of 1- to 12-gallon capacity and constructed of 29-gauge and heavier material.

i. "Refinishing" means the repainting of used equipment.

19.3. Standards.

a. No owner or operator of a miscellaneous metal parts and products coating line subject to this section 19. shall cause or allow the application of any coating with VOC content in excess of the emission limits in sections 19.3.a.1. through 19.3.a.5.

	kg/L[a]	lb/gal[a]
1. Clear coating	0.52	4.3
2. Steel pail & drum interior coating	0.52	4.3
3. Air-dried coating	0.42	3.5
4. Extreme performance coating	0.42	3.5
5. All other coatings	0.36	3.0

[a]VOC content values are expressed in units of mass of VOC (kg, lb) per volume of coating (liter [L], gallon [gal]), minus water and exempt compounds, as applied.

b. If more than one emission limit in section 19.3.a. applies to a specific coating, then the least stringent emission limit shall be applied.

c. As an alternative to compliance with the emission limits in section 19.3.a., an owner or operator of a miscellaneous metal parts and products coating line may meet the requirements of section 19.4. or section 19.5.

19.4. No owner or operator of a miscellaneous metal parts and products coating line that applies multiple coatings, all of which are subject to the same numerical emission limitation within section 19.3.a., during the same day (e.g., all coatings used on the line are subject to 0.42 kg/L [3.5 lb/gal]), shall apply coatings on that line during any day whose

daily-weighted average VOC content calculated in accordance with the procedure specified in section 43. exceeds the coating VOC content limit corresponding to the category of coating used.

19.5. Control devices. -- An owner or operator of a miscellaneous metal parts and products coating line subject to this section 19. shall comply with this section 19. by:

a. Installing and operating a capture system on that line;

b. Installing and operating a control device on that line;

c. Determining for each day the overall emission reduction efficiency needed to demonstrate compliance. The overall emission reduction needed for a day is the lesser of the value calculated according to the procedure in section 43.2. for that day or 95 percent; and

d. Demonstrating each day that the overall emission reduction efficiency achieved for that day, as determined in section 44.3., is greater than or equal to the overall emission reduction efficiency required for that day.

19.6. Test methods. -- The test methods found in sections 41. through 44. shall be used to determine compliance with this section 19.

19.7. Recordkeeping and reporting.

a. An owner or operator of a miscellaneous metal parts and products coating line that is exempt from the emission limitations in section 19.3 shall comply with the certification, recordkeeping, and reporting requirements in section 4.2.

b. An owner or operator of a miscellaneous metal parts and products coating line subject to this section 19. and complying with section 19.3. by the use of complying coatings shall comply with the certification, recordkeeping, and reporting requirements in section 4.3.

c. An owner or operator of a miscellaneous metal parts and products coating line subject to this section 19. and complying with section 19.4. by daily-weighted averaging shall comply with the certification, recordkeeping, and reporting requirements in section 4.4.

d. An owner or operator of a miscellaneous metal parts and products coating line subject to this section 19. and complying with section 19.5. by the use of control devices shall comply with the testing, reporting, and recordkeeping requirements in section 4.5.

§45-21-20. Coating of Flat Wood Paneling.

20.1. Applicability.

a. This section 20. applies to all flat wood paneling coating lines.

b. This section 20. does not apply to:

1. Any coating line within any facility whose actual emissions without control devices from all flat wood paneling coating lines within the facility are less than 6.8 kilograms (kg) (15 pounds [lb]) volatile organic compound (VOC) per day; or

2. Class I hardwood panels, particle board used in furniture, insulation board, exterior siding, tileboard, and softwood plywood coating lines.

c. An owner or operator of a facility whose emissions are below the applicability threshold in section 20.1.b.1. shall comply with the certification, recordkeeping, and reporting requirements of section 20.6.

20.2. Definitions. -- As used in this section 20., all terms not defined herein shall have the meaning given them in section 2.

a. "Class II hardboard paneling finish" means finishes that meet the specifications of Voluntary Product Standard PS-59-73 as approved by the American National Standards Institute.

b. "Flat wood paneling coating line" means a coating line used to apply and dry or cure coatings applied to flat wood panels including: printed interior panels made of hardwood plywood and thin particle board (i.e., less than or equal to 0.64 centimeters (cm) (0.25 inches [in]) in thickness); natural finish hardwood plywood panels; and hardwood paneling with Class II finishes.

c. "Hardboard" is a panel manufactured primarily from inter-felted ligno-cellulosic fibers that are consolidated under heat and pressure in a hot press.

d. "Hardwood plywood" is plywood whose surface layer is a veneer of hardwood.

e. "Natural finish hardwood plywood panels" means panels whose original grain pattern is enhanced by essentially transparent finishes frequently supplemented by fillers and toners.

f. "Printed interior panels" means panels whose grain or natural surface is obscured by fillers and basecoats upon which a simulated grain or decorative pattern is printed.

g. "Thin particleboard" is a manufactured board that is 0.64 cm (0.25 in) or less in thickness made of individual wood particles that have been coated with a binder and formed into flat sheets by pressure.

h. "Tileboard" means paneling that has a colored, waterproof surface coating.

20.3. Standards.

a. No owner or operator of a flat wood paneling coating line subject to this section 20. shall cause or allow VOC emissions from the coating of any flat wood paneling product in excess of the emission limits in sections 20.3.a.1. through 20.3.a.3.

		kg/100 m^{2a}	lb/1,000 ft^{2a}
1.	Printed interior panels	2.9	6.0
2.	Natural finish hardwood plywood panels	5.8	12.0
3.	Class II finish on hardwood panels	4.8	10.0

[a]VOC content values are expressed in units of mass of VOC (kg, lb) per area of surface to which the coating is applied (100 square meters [m^2], 1,000 square feet [ft^2]).

b. As an alternative to compliance with the emission limits in section 20.3.a., an owner or operator of a flat wood paneling coating line may meet the requirements of section 20.4 or meet the daily-weighted average limitation of section 20.5.a.

20.4. Control devices. -- An owner or operator of a flat wood paneling coating line subject to this section 20. shall comply with this section 20. by:

a. Installing and operating a capture system on that line;

b. Installing and operating a control device on that line;

c. Determining for each day the overall emission reduction efficiency needed to demonstrate compliance. The overall emission reduction needed for a day is the lesser of the value calculated according to the procedure in section 20.5.b. for that day or 95 percent; and

d. Demonstrating each day that the overall emission reduction efficiency achieved for that day, as determined in section 44.3., is greater than or equal to the overall emission reduction efficiency required for that day.

20.5. Test methods. -- The test methods found in sections 41., 42., 44. and this section 20.5 shall be used to determine compliance.

a. Daily-weighted average. -- The daily-weighted average VOC content, in units of mass of VOC per area of surface coated, of the coatings used on a day on a flatwood paneling coating line shall be calculated using the following equation:

$$VOC_w = \frac{\sum_{i=1}^{n} V_i \; C_i}{a}$$

where:

VOC_W = The daily-weighted average VOC content of the coatings, as applied, used on a coating line in units of kilograms of VOC per 100 square meters of surface area coated (kg VOC/100 m^2) (pounds of VOC per 1,000 square feet of surface area coated [lb VOC/1,000 ft^2)

n = The number of different coatings, as applied, each day on a coating line;

V_i = The volume of each coating applied each day on a coating line in units of L (gal); and

C_i = The VOC content of each coating, as applied, each day on a coating line in units of kg VOC/L of coating (lb VOC/gal); and

a = Surface area coated per day in terms of m^2/100 or surface area coated per day in terms of ft^2/1000.

b. Calculate the required overall emission reduction efficiency of the control system for the day according to the following equation:

$$E = \left[\frac{(VOC_a - S)}{VOC_a} \right] \times 100$$

where:

E = The required overall emission reduction efficiency of the control system for the day;

VOC_a = (1) The maximum VOC content of the coatings, as applied, used each day on a coating line in units of kg VOC/100 m^2 of surface area coated (lb VOC/1,000 ft^2), as determined by the applicable test methods and procedures specified in section 42.; or (2) The daily-weighted average VOC content, as applied, of the coatings used each day on a coating line in units of kg VOC/100 m^2 of surface area coated (lb VOC/1,000 ft^2), as determined by the applicable test methods and procedures specified in section 42. and the procedure in section 20.5.a.; and

S = VOC emission limitation in terms of kg VOC/100 m^2 of surface area coated (lb VOC/1,000 ft^2).

20.6. Recordkeeping and reporting.

a. Requirements for coating sources exempt from emission limitations. -- An owner or operator of a flat wood paneling coating line that is exempt from the emission limitations of section 20.3.a. because combined VOC emissions from all coating lines at the facility are below the applicability threshold specified in section 20.1.b., before the application of capture systems and control devices, shall comply with the following:

1. Certification. -- By one year from May 31, 1993, the owner or operator of a facility referenced in section 20.6.a. shall certify to the Director that the facility is exempt by providing the following:

A. The name and location of the facility;

B. The address and telephone number of the person responsible for the facility;

C. A declaration that the facility is exempt from the emission limitations of section 20.3.a. because combined VOC emissions from all coating lines and at the facility are below the applicability threshold before the application of capture systems and control devices; and

D. Calculations of the daily-weighted average that demonstrate that the combined VOC emissions from all coating lines at the facility for a day representative of current maximum production levels are 6.8 kilograms (kg) (15 pounds [lb]) or less before the application of capture systems and control devices. The following equation shall be used to calculate total VOC emissions for that day:

$$T = \sum_{i=1}^{n} C_i \, D_i \, a$$

where:

T = Total VOC emissions from coating lines and operations at the facility before the application of capture systems and control devices in units of kg/day (lb/day);

n = Number of different coatings applied on each coating line or each operation at the facility;

i = Subscript denoting an individual coating;

C = Mass of VOC per area of surface to which the coating is applied in units of kg/100 m^2 (lb/1,000 ft^2);

D = The surface area coated at the facility each day in units of m^2/day

(ft^2/day);

a = Constant = 100 m^2 if using metric units; and
= 1,000 ft^2 if using english units.

2. Recordkeeping. -- On and after one year from May 31, 1993, the owner or operator of a facility referenced in section 20.6.a. shall collect and record all of the following information each day and maintain the information at the facility for a period of 3 years:

A. The name and identification number of each coating, as applied;

B. The volume of coating (i) (minus water and exempt compounds), as applied, used each day, and the surface area coated each day; and

C. The total VOC emissions at the facility, as calculated using the equation under section 20.6.a.1.D.

3. Reporting. -- On and after one year from May 31, 1993, the owner or operator of a facility referenced in section 20.6.a. shall notify the Director of any record showing that combined VOC emissions from all coating lines and operations at the coating facility exceed 6.8 kg (15 lb) on any day, before the application of capture systems and control devices. A copy of such record shall be sent to the Director within 30 days after the exceedance occurs.

b. Requirements for coating sources using complying coatings. -- An owner or operator of a flat wood paneling subject to this section 20. and complying with section 20.3. by means of the use of complying coatings shall comply with the following:

1. Certification. -- By one year after May 31, 1993, or upon startup of a new coating line, or upon changing the method of compliance for an existing subject coating line from daily-weighted averaging or control devices to the use of complying coatings, the owner or operator of a coating line referenced in section 20.6.b. shall certify to the Director that the coating line is or will be in compliance with the requirements of the applicable section of this regulation on and after one year after May 31, 1993, or on and after the initial startup date. Such certification shall include:

A. The name and location of the facility;

B. The address and telephone number of the person responsible for the facility;

C. Identification of subject sources;

D. The name and identification number of each coating, as

applied, on each coating line; and

E. The mass of VOC per area of surface to which the coating is applied in terms of kg/100 m^2 (lb/1,000 ft^2) and the surface area coated.

2. Recordkeeping. -- On and after one year from May 31, 1993, or on and after the initial startup date, the owner or operator of a coating line referenced in section 20.6.b. and complying by the use of complying coatings shall collect and record all of the following information each day for each coating line and maintain the information at the facility for a period of 3 years:

A. The name and identification number of each coating, as applied, on each coating line or operation; and

B. The mass of VOC per area of surface to which the coating is applied for each coating used each day on each coating line in terms of kg/100 m^2 (lb/1,000 ft^2).

3. Reporting. -- On and after one year from May 31, 1993, the owner or operator of a flatwood paneling coating line referenced in section 20.6.b. shall notify the Director in the following instances:

A. Any record showing use of any non-complying coatings shall be reported by sending a copy of such record to the Director within 30 days following that use; and

B. At least 30 calendar days before changing the method of compliance from the use of complying coatings to daily-weighted averaging or control devices, the owner or operator shall comply with all requirements of section 20.6.c.1. or section 20.6.d.1., respectively. Upon changing the method of compliance from the use of complying coatings to daily-weighted averaging or control devices, the owner or operator shall comply with all requirements of the section of this regulation applicable to the coating line referenced in section 20.6.b.

c. Requirements for coating sources using daily-weighted averaging. -- Any owner or operator of a coating line subject to the limitations of this section 20. and complying by means of daily-weighted averaging on that line shall comply with the following:

1. Certification. -- By one year after May 31, 1993, or upon startup of a new flat wood paneling coating line, or upon changing the method of compliance for an existing flat wood paneling coating line from the use of complying coatings or control devices to daily-weighted averaging, the owner or operator of the flat wood paneling coating line shall certify to the Director that the coating line or operation is or will be in compliance with the requirements of the applicable section of this regulation on and after one year after May 31, 1993, or on and after the initial startup date. Such certification shall include:

A. The name and location of the facility;

B. The address and telephone number of the person responsible for the facility;

C. Identification of subject sources;

D. The name and identification number of each coating line which will comply by means of daily-weighted averaging;

E. The instrument or method by which the owner or operator will accurately measure or calculate the volume of each coating (minus water and exempt compounds), as applied, used each day on each coating line;

F. The method by which the owner or operator will create and maintain records each day as required in section 20.6.c.2.;

G. An example of the format in which the records required in section 20.6.c.2. will be kept; and

H. Calculation of the daily-weighted average, using the procedure in section 20.5.a., for a day representative of current or projected maximum production levels.

2. Recordkeeping. -- On and after one year from May 31, 1993, or on and after the initial startup date, the owner or operator of a flat wood paneling coating line referenced in section 20.6.c. and complying by means of daily-weighted averaging shall collect and record all of the following information each day for each coating line and maintain the information at the facility for a period of 3 years:

A. The name and identification number of each coating, as applied, on each coating line;

B. The mass of VOC per volume (minus water and exempt compounds) and the volume of each coating (minus water and exempt compounds), as applied, used each day on each coating line; and

C. The daily-weighted average VOC content of all coatings, as applied, on each coating line calculated according to the procedure in section 20.5.a.

3. Reporting. -- On and after one year from May 31, 1993, the owner or operator of a subject coating line referenced in section 20.6.c. shall notify the Director in the following instances:

A. Any record showing noncompliance with the applicable

daily-weighted average requirements shall be reported by sending a copy of the record to the Director within 30 days following the occurrence, except as provided in section 9.3.

B. At least 30 calendar days before changing the method of compliance from daily-weighted averaging to the use of complying coatings or control devices, the owner or operator shall comply with all requirements of section 20.6.b.1. or section 20.6.d.1., respectively. Upon changing the method of compliance from daily-weighted averaging to the use of complying coatings or control devices, the owner or operator shall comply with all requirements of the section of this regulation applicable to the coating line referenced in section 20.6.c.

d. Requirements for coating sources using control devices. -- Any owner or operator of a flat wood paneling coating line subject to this section 20. and complying with section 20.3. by the use of control devices shall comply with the following:

1. Testing of control equipment. -- By one year from May 31, 1993, or upon startup of a new coating line, or upon changing the method of compliance for an existing coating line from the use of complying coatings or daily-weighted averaging to control devices, the owner or operator of the subject coating line shall perform a compliance test. Testing shall be performed pursuant to the procedures in sections 41., 42., 44., and section 20.5. The owner or operator of the subject coating line shall submit to the Director the results of all tests and calculations necessary to demonstrate that the subject coating line is or will be in compliance with the applicable section of this regulation on and after one year from May 31, 1993, or on and after the initial startup date.

2. Recordkeeping. -- On and after one year from May 31, 1993, or on and after the initial startup date, the owner or operator of a coating line referenced in section 20.6.d. shall collect and record all of the following information each day for each coating line and maintain the information at the facility for a period of 3 years:

A. The name and identification number of each coating used on each coating line;

B. The mass of VOC per area of surface to which the coating is applied in terms of kg/100 m^2 (lb/1,000 ft^2), and the surface area coated each day on each coating line;

C. The maximum VOC content (mass of VOC per area of surface to which the coating is applied in terms of kg/100 m^2 [lb/1,000 ft^2]) or the daily-weighted average VOC content (mass of VOC per area of surface to which the coating is applied in terms of kg/100 m^2 [lb/1,000 ft^2]) of the coatings used each day on each coating line;

D. The required overall emission reduction efficiency for each day for each coating line as determined in section 20.4.c.;

E. The actual overall emission reduction efficiency achieved for each day for each coating line as determined in section 44.3.;

F. Control device monitoring data;

G. A log of operating time for the capture system, control device, monitoring equipment, and the associated coating line;

H. A maintenance log for the capture system, control device, and monitoring equipment detailing all routine and non-routine maintenance performed including dates and duration of any outages;

I. For thermal incinerators, all 3-hour periods of operation in which the average combustion temperature was more than 28°C (50°F) below the average combustion temperature during the most recent performance test that demonstrated that the facility was in compliance;

J. For catalytic incinerators, all 3-hour periods of operation in which the average temperature of the process vent stream immediately before the catalyst bed is more than 28°C (50°F) below the average temperature of the process vent stream during the most recent performance test that demonstrated that the facility was in compliance; and

K. For carbon adsorbers, all 3-hour periods of operation during which the average VOC concentration or reading of organics in the exhaust gases is more than 20 percent greater than the average exhaust gas concentration or reading measured by the organics monitoring device during the most recent determination of the recovery efficiency of the carbon adsorber that demonstrated that the facility was in compliance.

3. Reporting. -- On and after one year from May 31, 1993, the owner or operator of a subject coating line referenced in section 20.6.d. shall notify the Director in the following instances:

A. Any record showing noncompliance with the applicable requirements for control devices shall be reported by sending a copy of the record to the Director within 30 days following the occurrence, except as provided in section 9.3.

B. At least 30 calendar days before changing the method of compliance from control devices to the use of complying coatings or daily-weighted averaging, the owner or operator shall comply with all requirements of section 20.6.b.1. or section 20.6.c.1., respectively. Upon changing the method of compliance from control devices to the use of complying coatings or daily-weighted averaging, the owner or operator shall comply with all requirements of the section of this regulation applicable to the coating line referenced in section 20.6.d.

§45-21-21. Bulk Gasoline Plants.

21.1. Applicability.

a. This section 21. applies to all unloading, loading, and storage operations at bulk gasoline plants and to any tank truck delivering or receiving gasoline at a bulk gasoline plant.

b. The following are subject only to the requirements of sections 21.2.c.7., 21.2.c.8., and 21.2.c.9.:

1. Any stationary storage tank of 2,082 liters (L) (550 gallons [gal]) capacity or less notwithstanding section 8.; or

2. Any bulk gasoline plant with an average daily throughput of gasoline of less than 15,000 L (4,000 gal) on a 30-day rolling average provided that records are maintained according to the requirements in section 21.4.a.

21.2. Standards.

a. Each bulk gasoline plant subject to this section 21. shall be equipped with a vapor balance system between the gasoline storage vessel and the incoming gasoline tank truck designed to capture and transfer vapors displaced during filling of the gasoline storage vessel. These lines shall be equipped with fittings that are vapor tight and that automatically and immediately close upon disconnection.

b. Each bulk gasoline plant subject to this section 21. shall be equipped with a vapor balance system between the gasoline storage vessel and the outgoing gasoline tank truck designed to capture and transfer vapors displaced during the loading of the gasoline tank truck. The vapor balance system shall be designed to prevent any vapors collected at one loading rack from passing to another loading rack.

c. Each owner or operator of a bulk gasoline plant subject to this section 21. shall act to ensure that the procedures in sections 21.2.c.1. through 21.2.c.9. are followed during all loading, unloading, and storage operations:

1. The vapor balance system required by sections 21.2.a. and 21.2.b. shall be connected between the tank truck and storage vessel during all gasoline transfer operations;

2. All storage vessel openings, including inspection hatches and gauging and sampling devices shall be vapor tight when not in use;

3. The gasoline tank truck compartment hatch covers shall not be opened during the gasoline transfer;

4. All vapor balance systems shall be designed and operated at all times to prevent gauge pressure in the gasoline tank truck from exceeding 450 millimeters (mm) (18 inches [in]) of water and vacuum from exceeding 150 mm (5.9 in) of water during product transfers;

5. No pressure vacuum relief valve in the bulk gasoline plant vapor balance system shall begin to open at a system pressure of less than 450 mm (18 in) of water or at a vacuum of less than 150 mm (5.9 in) of water;

6. All product transfers involving gasoline tank trucks at bulk gasoline plants subject to this section 21. shall be limited to vapor-tight gasoline tank trucks;

7. Filling of storage vessels shall be restricted to submerged fill;

8. Loading of outgoing gasoline tank trucks shall be limited to submerged fill; and

9. Owners or operators of bulk gasoline plants or owners or operators of tank trucks shall observe all parts of the transfer and shall discontinue transfer if any leaks are observed.

d. Each calendar month, the vapor balance systems described in sections 21.2.a. and 21.2.b. and each loading rack handling gasoline shall be inspected for liquid or vapor leaks during gasoline transfer operations. For purposes of this section 21.2.d., detection methods incorporating sight, sound, or smell are acceptable. Each leak that is detected shall be repaired within 15 calendar days after it is detected.

21.3. Compliance provisions. -- A pressure measurement device (liquid manometer, magnehelic gauge, or equivalent instrument) capable of measuring 500 mm (20 in) of water gauge pressure within a ±2.5 mm (0.098 in) of water precision, shall be calibrated and installed on the bulk gasoline plant vapor balance system at a pressure tap, located as close as possible to the connection with the gasoline tank truck, to allow determination of compliance with section 21.2.c.4.

21.4. Recordkeeping. -- The owner or operator of a facility subject to this section 21. shall maintain the following records in a readily accessible location for at least 3 years and shall make these records available to the Director upon verbal or written request.

a. All bulk gasoline plants subject to this section 21. shall maintain daily records showing the quantity of all gasoline loaded into gasoline tank trucks.

b. A record of each monthly leak inspection required under section 21.2.d. shall be kept on file at the plant. Inspection records shall include, as a minimum, the following information:

1. Date of inspection;

2. Findings (may indicate no leaks discovered or location, nature, and severity of each leak);

3. Leak determination method;

4. Corrective action (date each leak repaired; reasons for any repair interval in excess of 15 days); and

5. Inspector name and signature.

21.5. Reporting. -- The owner or operator of any facility containing sources subject to this section 21. shall comply with the requirements in sections 5.1. and 5.2.

§45-21-22. Bulk Gasoline Terminals.

22.1. Applicability. -- This section 22. applies to all loading racks at any bulk gasoline terminal which deliver liquid product into gasoline tank trucks.

22.2. Standards for loading racks at bulk gasoline terminals.

a. Each loading rack at a bulk gasoline terminal subject to this section 22. shall be equipped with a vapor collection system designed to collect the total volatile organic compound (VOC) vapors displaced from tank trucks during product loading.

b. Each vapor collection system shall be designed to prevent any VOC vapors collected at one loading rack from passing to another loading rack.

c. Loadings of liquid product into gasoline tank trucks shall be limited to vapor-tight gasoline tank trucks using the following procedures:

1. The owner or operator shall obtain the vapor tightness documentation described in sections 22.4.a. and 22.4.b. for each gasoline tank truck that is to be loaded at the bulk gasoline terminal loading rack subject to this section 22.;

2. The owner or operator shall require the tank identification number to be recorded as each gasoline tank truck is loaded at the terminal;

3. The owner or operator shall cross-check each tank identification number obtained in section 22.2.c.2. with the file of tank vapor tightness documentation within 2 weeks after the corresponding tank is loaded;

4. The terminal owner or operator shall notify the owner or operator of each non-vapor-tight gasoline tank truck loaded at the bulk gasoline terminal loading rack that the truck is not vapor tight subject to this section 22. within 3 weeks after the loading has occurred; and

5. The terminal owner or operator shall take steps to assure that the non-vapor-tight gasoline tank truck will not be reloaded at the bulk gasoline terminal loading rack subject to this section 22. until vapor tightness documentation for that tank is obtained.

d. The terminal owner or operator shall act to ensure that loadings of gasoline tank trucks at the bulk gasoline terminal loading rack subject to this section 22. are made only into tanks equipped with vapor collection equipment that is compatible with the terminal's vapor collection system.

e. The terminal owner or operator shall act to ensure that the terminal's and the tank truck's vapor collection systems are connected during each loading of a gasoline tank truck at the bulk gasoline terminal loading racks subject to this section 22.

f. The vapor collection and liquid loading equipment shall be designed and operated to prevent gauge pressure in the delivery tank from exceeding 4,500 Pascals (Pa) (450 millimeters [mm] of water) during product loading. This level is not to be exceeded when measured by the procedures specified in section 22.3.a.

g. No pressure-vacuum vent in the bulk gasoline terminal's vapor collection system shall begin to open at a system pressure less than 4,500 Pa (450 mm of water).

h. Each calendar month, the vapor collection system, the vapor control system, and each loading rack handling gasoline shall be inspected during the loading of gasoline tank trucks for total organic compounds liquid or vapor leaks. For purposes of this section 22.2.h., detection methods incorporating sight, sound, or smell are acceptable. Each detection of a leak shall be recorded and the source of the leak repaired within 15 calendar days after it is detected.

i. The total organic compounds emissions to the atmosphere from the vapor collection system due to the loading of liquid product into gasoline tank trucks shall not exceed 80 milligrams per liter (mg/L) (4.7 grains per gallon [grain/gal]) of gasoline loaded.

j. Loading of outgoing gasoline tank trucks shall be restricted to the use of submerged fill.

22.3. Test methods and procedures.

a. For the purpose of determining compliance with section 22.2.f., the following procedures shall be used:

1. Calibrate and install a pressure measurement device (liquid manometer, magnehelic gauge, or equivalent instrument) capable of measuring up to 500 mm (20 inches [in]) of water gauge pressure with ±2.5 mm (0.098 in) of water precision.

2. Connect the pressure measurement device to a pressure tap in the terminal's vapor collection system, located as close as possible to the connection with the gasoline tank truck.

3. During the performance test, record the pressure every 5 minutes (min) while a gasoline tank truck is being loaded, and record the highest instantaneous pressure that occurs during each loading. Every loading position shall be tested at least once during the performance test.

b. For the purpose of determining compliance with the mass emission limitations of section 22.2.i., the following reference methods shall be used:

1. For the determination of volume at the exhaust vent:

A. Method 2B of 40 CFR Part 60, Appendix A for combustion vapor processing systems; and

B. Method 2A of 40 CFR Part 60, Appendix A for all other vapor processing systems; and

2. For the determination of total organic compounds concentration at the exhaust vent, Method 25A or 25B of 40 CFR Part 60, Appendix A. The calibration gas shall be either propane or butane.

c. Immediately prior to a performance test required for determination of compliance with sections 22.2.f. and 22.2.i., all potential sources of vapor and liquid leakage in the terminal's vapor collection system equipment shall be monitored for leaks according to the procedures in section 46. The monitoring shall be conducted only while a gasoline tank truck is being loaded. A reading of 10,000 parts per million by volume (ppmv) or greater as methane shall be considered a leak. All leaks shall be repaired prior to conducting the performance test.

d. The test procedure for determining compliance with sections 22.2.f. and 22.2.i. is as follows:

1. All testing equipment shall be prepared and installed as specified in the appropriate test methods.

2. The time period for a performance test shall be not less than 6 hours, during which at least 300,000 liters (L) (80,000 gallons [gal]) of gasoline are loaded. If the throughput criterion is not met during the initial 6 hours, the test may be either continued until the throughput criterion is met, or resumed the next day with another complete 6 hours of testing. As much as possible, testing shall be conducted during the 6-hour period in which the highest throughput normally occurs.

3. For intermittent vapor processing systems:

A. The vapor holder level shall be recorded at the start of the performance test. The end of the performance test shall coincide with a time when the vapor holder is at its original level; and

B. At least two startups and shutdowns of the vapor processor shall occur during the performance test. If this does not occur under automatically controlled operation, the system shall be manually controlled.

4. The volume of gasoline dispensed during the performance test period at all loading racks whose vapor emissions are controlled by the vapor processing system being tested shall be determined. This volume may be determined from terminal records or from gasoline dispensing meters at each loading rack.

5. An emission testing interval shall consist of each 5-minute period during the performance test. For each interval:

A. The reading from each measurement instrument shall be recorded; and

B. The volume exhausted and the average total organic compounds concentration in the exhaust vent shall be determined, as specified in the appropriate test method. The average total organic compounds concentration shall correspond to the volume measurement by taking into account the sampling system response time;

6. The mass emitted during each testing interval shall be calculated as follows:

$$M_{ei} = 10^{-6} K V_{es} C_e$$

where:

M_{ei}	=	Mass of total organic compounds (milligrams [mg]) emitted during testing interval i;
V_{es}	=	Volume of air-vapor mixture exhausted (cubic meters [m^3]), at standard conditions;
C_e	=	Total organic compounds concentration (as measured) at the exhaust vent (ppmv);
K	=	Density of calibration gas (milligrams/cubic meter [mg/m^3]) at standard conditions;
	=	1.83×10^6 for propane;
	=	2.41×10^6 for butane; and
s	=	Standard conditions, 20°C and 760 millimeters of Mercury (mm Hg); and

7. The total organic compounds mass emissions shall be calibrated as follows:

$$E = \frac{\sum_{i=1}^{n} M_{ei}}{L}$$

where:

E	=	mass of total organic compounds emitted per volume of gasoline loaded, mg/L;
M_{ei}	=	mass of total organic compounds emitted during testing interval i, mg;
L	=	total volume of gasoline loaded, L; and

n = number of testing intervals.

e. The owner or operator may adjust the emission results to exclude the methane and ethane content in the exhaust vent by any method approved by the Director and the U.S. EPA.

22.4. Recordkeeping. -- The owner or operator of a facility subject to the requirements of this section 22. shall maintain the following records in a readily accessible location for at least 3 years and shall make these records available to the Director upon verbal or written request.

a. The tank truck vapor tightness documentation required under section 22.2.c. shall be kept on file at the terminal in a permanent form available for inspection.

b. The documentation file for each gasoline tank truck shall be updated at least once per year to reflect current test results as determined by Method 27 of 40 CFR Part 60, Appendix A. This documentation shall include, as a minimum, the following information:

1. Test title: Gasoline Delivery Tank Pressure Test--EPA Reference Method 27;

2. Tank owner and address;

3. Tank identification number;

4. Testing location;

5. Date of test;

6. Tester name and signature;

7. Witnessing inspector, if any: Name, signature, and affiliation; and

8. Test results: Actual pressure change in 5 min, mm of water (average for two runs).

c. A record of each monthly leak inspection required under section 22.2.h. shall be kept on file at the terminal. Inspection records shall include, as a minimum, the following information:

1. Date of inspection;

2. Findings (may indicate no leaks discovered or location, nature, and severity of each leak);

3. Leak determination method;

4. Corrective action (date each leak repaired, reasons for any repair interval in excess of 15 days); and

5. Inspector name and signature.

d. The terminal owner or operator shall keep documentation of all notifications required under section 22.2.c.4. on file at the terminal.

e. Daily records shall be maintained of gasoline throughput.

22.5. Reporting. -- The owner or operator of any facility containing sources subject to this section 22. shall comply with the requirements in sections 5.1. and 5.2.

§45-21-23. Gasoline Dispensing Facility--Stage I Vapor Recovery.

23.1. Applicability.

a. This section 23. applies to any gasoline dispensing facility and the appurtenant equipment necessary to a gasoline dispensing facility.

b. The following are subject only to section 23.2.a.1.:

1. Any transfer made to a gasoline dispensing facility storage tank that is equipped with a floating roof or its equivalent that has been approved by the U.S. EPA;

2. Any stationary gasoline storage container with a capacity that is less than 2,080 liters (L) (550 gallons [gal]) that is used exclusively for the fueling of implements of husbandry;

3. Any stationary storage tank with a capacity of less than 7,600 L (2,000 gal) that was constructed prior to January 1, 1979; and

4. Any stationary storage tank with a capacity of less than 950 L (250 gal) that was constructed after December 31, 1978.

c. Any gasoline dispensing facility with a throughput of less than 38,000 L (10,000 gal) per month is subject only to the provisions of sections 23.2.a.1. and 23.3.

23.2. Standards.

a. The owner or operator of each gasoline dispensing facility subject to this section 23. shall comply with the following requirements:

1. All gasoline storage vessels at gasoline dispensing facilities shall be loaded by submerged fill;

2. All vapor lines on the storage vessel shall be equipped with closures that seal upon disconnect;

3. A vapor balance system shall be installed with a vapor-tight line from the gasoline storage tank to the gasoline tank truck. The system shall be designed such that the back pressure in the gasoline tank truck does not exceed 450 millimeters (mm) (18 inches [in]) of water pressure or 150 mm (5.9 in) of water vacuum;

4. If a gauge well separate from the fill tube is used, it shall be provided with a submerged drop tube that extends to within 150 mm (5.9 in) of the gasoline storage vessel bottom; and

5. Liquid fill connections for all systems shall be equipped with vapor tight caps.

b. The owner or operator of a gasoline tank truck shall not unload gasoline to a gasoline storage vessel at a gasoline dispensing facility subject to this section 23. unless the following conditions are met:

1. All hoses in the vapor balance system are properly connected;

2. Closures that seal upon disconnect are required on the adapters or couplers that attach to the vapor line on the gasoline storage vessel;

3. All vapor return hoses, couplers, and adapters used in the gasoline delivery are vapor tight;

4. All vapor return equipment are compatible with the vapor balance equipment installed on the gasoline dispensing facility storage vessel;

5. All hatches on the gasoline tank truck are closed and securely fastened; and

6. The filling of storage vessels at gasoline dispensing facilities are limited to unloading by vapor-tight gasoline tank trucks. Documentation that the gasoline tank truck has met the specifications of Method 27 of 40 CFR Part 60, Appendix A, shall be carried on the tank truck. This documentation shall include all of the information required under 40 CFR 60.505. In addition, test results shall be included for both the pressure and vacuum tests.

23.3. Recordkeeping. -- The owner or operator of each gasoline dispensing facility subject to this section 23. shall maintain daily records showing the quantity of all gasoline delivered to the site. These records shall be retained for at least 3 years in a readily accessible location and shall be made available to the Director upon verbal or written request.

23.4. Reporting. -- The owner or operator of any facility containing sources subject to this section 23. shall comply with the requirements in sections 5.1. and 5.2.

§45-21-24. Leaks from Gasoline Tank Trucks.

24.1. Applicability. -- This section 24. applies to any gasoline tank truck equipped for gasoline vapor collection. No exemptions are allowable based on number of gasoline tank trucks or total quantity of volatile organic compound (VOC) emissions.

24.2. Standards. -- Each owner or operator of a gasoline tank truck subject to this section 24. shall ensure that the gasoline tank truck:

a. Is a vapor-tight gasoline tank truck as demonstrated by Method 27 of Appendix A of 40 CFR Part 60.

b. Displays a sticker near the Department of Transportation Certification plate required by 49 CFR 178.340-10b, that:

1. Shows the date that the tank truck last passed the test required in section 24.2.a.;

2. Shows the identification number of the truck tank; and

3. Expires not more than 1 year from the date of the leak tight test.

c. Operates with hatches open only during measurement of product level or maintenance.

24.3. Monitoring for leaks from gasoline tank trucks.

a. The Director may, at any time, monitor a gasoline tank truck by the method referenced in section 24.3.b. to confirm continuing compliance with this section 24.

b. Monitoring to confirm the continuing existence of leak tight conditions shall be consistent with the procedures described in Appendix B of the OAQPS Guideline Series document, "Control of Organic Compound Leaks from Gasoline Tank Trucks and Vapor Collection Systems," EPA-450/2-78-051.

24.4. Test methods and procedures. -- The test procedures to determine compliance with this section 24. shall be Method 27 of 40 CFR Part 60, Appendix A.

24.5. Recordkeeping and reporting requirements.

a. The owner or operator of a gasoline tank truck subject to this section 24. shall maintain records of all certification, testing, and repairs. The records shall identify the gasoline tank truck, the date of the tests or repair, and, if applicable, the type of repair and the date of retest. The records shall be maintained in a legible, readily available condition for at least 3 years after the date the testing or repair is completed. These records

shall be made available to the Director upon written or verbal request.

b. The records of certification tests required by section 24.5.a., shall, as a minimum, contain:

1. The gasoline tank truck vessel tank identification number;

2. The initial test pressure and the time of the reading;

3. The final test pressure and the time of the reading;

4. The initial test vacuum and the time of the reading;

5. The final test vacuum and the time of the reading;

6. At the top of each report page, the company name and the date and location of the tests on that page; and

7. The name and the title of person conducting the test.

c. The owner or operator of a gasoline tank truck subject to this section 24. shall certify and report to the Director annually that the tank truck has been tested by an applicable method referenced in section 24.4. The certification shall include:

1. The name and address of the company and the name and telephone number of the responsible company representative under whose signature the certification is submitted; and

2. A copy of the information recorded to comply with section 24.5.b.

d. Copies of all records and reports under this section 24. shall be made available to the Director upon verbal or written request.

§45-21-25. Petroleum Refinery Sources.

25.1. Applicability.

a. This section 25. applies to any vacuum-producing system, wastewater separator, and process unit turnaround at petroleum refinery sources. No exemptions are allowable based on size or throughput of a facility.

b. This section 25. does not apply to segregated storm water runoff drain systems or to non-contact cooling water systems.

25.2. Definitions. -- As used in this section 25., all terms not defined herein shall have the meaning given them in section 2.

a. "Accumulator" means the reservoir of a condensing unit receiving the condensate from the condenser.

b. "Firebox" means the chamber or compartment of a boiler or furnace in which materials are burned but does not mean the combustion chamber of an incinerator.

c. "Forebays" means the primary sections of a wastewater separator.

d. "Hot well" means the reservoir of a condensing unit receiving the warm condensate from the condenser.

e. "Refinery fuel gas" means any gas that is generated by a petroleum refinery process unit and that is combusted, including any gaseous mixture of natural gas and fuel gas.

f. "Turnaround" means the procedure of shutting a refinery unit down after a run to perform necessary maintenance and repair work and returning the unit to operation.

g. "Vacuum producing system" means any reciprocating, rotary, or centrifugal blower or compressor, or any jet ejector or device that takes suction from a pressure below atmospheric and discharges against atmospheric pressure.

h. "Wastewater (oil/water) separator" means any device or piece of equipment that utilizes the difference in density between oil and water to remove oil and associated chemicals from water, or any device, such as a flocculation tank, clarifier, etc., that removes petroleum-derived compounds from wastewater.

25.3. Standards.

a. Vacuum producing systems. -- No person shall permit the emission of any uncondensed volatile organic compound (VOC) from the condensers, hot wells, or accumulators of any vacuum producing system at a petroleum refinery. The standard shall

be achieved by:

1. Piping the uncondensed vapors to a firebox or incinerator; or

2. Compressing the vapors and adding them to the refinery fuel gas.

b. Wastewater separators. -- The owner or operator of any wastewater (oil/water) separator at a petroleum refinery shall:

1. Provide covers and seals on all separators and forebays; and

2. Equip all openings in covers, separators, and forebays with lids or seals and keep the lids or seals in the closed position at all times except when in actual use.

c. Process unit turnarounds. -- The owner or operator of a petroleum refinery shall provide for the following during process unit turnaround:

1. Depressurization venting of the process unit or vessel to a vapor recovery system, flare, or firebox;

2. No emission of VOC from a process unit or vessel until its internal pressure is 136 kiloPascals (kPa) (19.7 pounds per square inch atmospheric [psia]) or less; and

3. Recordkeeping of the following items:

A. Date of every process unit or vessel turnaround;

B. The internal pressure of the process unit or vessel immediately prior to venting to the atmosphere.

25.4. Recordkeeping. -- The owner or operator of a petroleum refinery shall maintain the records required by section 25.3.c.3. in a readily accessible location for at least 3 years and shall make these records available to the Director upon verbal or written request.

25.5. Reporting. -- The owner or operator of any facility containing sources subject to this section 25. shall comply with the requirements in sections 5.1. and 5.2.

§45-21-26. Leaks from Petroleum Refinery Equipment.

26.1. Applicability.

a. This section 26. applies to all equipment in volatile organic compound (VOC) service in any process unit at a petroleum refinery, regardless of size or throughput.

b. The requirements of sections 26.4. through 26.8. do not apply to:

1. Any equipment in vacuum service;

2. Any pressure relief valve that is connected to an operating flare header or vapor recovery device;

3. Any liquid pump that has a dual mechanical pump seal with a barrier fluid system;

4. Any compressor with a degassing vent that is routed to an operating VOC control device; and

5. Pumps and valves in heavy liquid service except that if evidence of a leak is found by visual, audible, olfactory, or other detection method, the owner or operator must confirm the presence of a leak using the methods specified in section 46. If a leak is confirmed, the owner or operator must repair the leak as specified in section 26.7.

26.2. Definitions. -- As used in this section 26., all terms not defined herein shall have the meaning given them in section 2.

a. "[In] gas/vapor service" means that the piece of equipment in VOC service contains process fluid that is in the gaseous state at operating conditions.

b. "[In] heavy liquid service" means that the piece of equipment in VOC service is not in gas/vapor service or in light liquid service.

c. "[In] light liquid service" means that the piece of equipment in VOC service contains a liquid that meets the following conditions: (1) the vapor pressure of one or more of the components is greater than 0.3 kPa (0.09 in Hg) at 20°C (68°F) (standard reference texts or ASTM D2879 shall be used to determine the vapor pressures); (2) the total concentration of the pure components having a vapor pressure greater than 0.3 kPa (0.09 in Hg) at 20°C (68°F) is equal to or greater than 20 percent by weight; and (3) the fluid is a liquid at operating conditions.

d. "[In] vacuum service" means that the equipment in VOC service is operating at an internal pressure which is at least 5 kPa below ambient pressure.

e. "[In] VOC service" means that the piece of equipment contains or contacts a process fluid that is at least 10 percent VOC by weight. The provisions of section 26.9.b. specify how to determine that a piece of equipment is not in VOC service.

26.3. Standards: General. -- The owner or operator of a petroleum refinery complex subject to this section 26. shall ensure that:

a. Any open-ended line or valve is sealed with a second valve, blind flange, cap, or plug except during operations requiring process fluid flow through the open-ended line or valve.

b. When a second value is used, each open-ended line or valve equipped with a second valve is operated in such a manner that the valve on the process fluid end is closed before the second valve is closed.

c. When a double block-and-bleed system is used, the bleed valve or line is open only during operations that require venting of the line between the block valves and is closed at all other times.

26.4. Standards: Equipment inspection program. -- The owner or operator of a petroleum refinery shall conduct the equipment inspection program described in sections 26.4.a. through 26.4.c. using the test methods specified in section 46.

a. The owner or operator of a petroleum refinery shall conduct quarterly monitoring of each:

1. Compressor;

2. Pump in light liquid service;

3. Valve in light liquid service, except as provided in sections 26.5. and 26.6.;

4. Valve in gas/vapor service, except as provided in sections 26.5. and 26.6.; and

5. Pressure relief valve in gas/vapor service, except as provided in sections 26.5. and 26.6.

b. The owner or operator of a petroleum refinery shall conduct a weekly visual inspection of each pump in light liquid service.

c. The owner or operator of a petroleum refinery shall monitor each pressure relief valve after each overpressure relief to ensure that the valve has properly reseated and is not leaking.

d. When an instrument reading of 10,000 parts per million (ppm) or greater is measured, it shall be determined that a leak has been detected.

e. If there are indications of liquid dripping from the equipment, it shall be determined that a leak has been detected.

f. When a leak is detected, the owner or operator shall affix a weatherproof, readily visible tag in a bright color such as red or yellow bearing the equipment identification number and the date on which the leak was detected. This tag shall remain in place until the leaking equipment is repaired. An alternative leak identifier system may be used if the owner or operator demonstrates to the Director that the system is equally as effective. The requirements of this section 26.4.f. apply to any leak detected by the equipment inspection program and to any leak from any equipment that is detected on the basis of sight, sound, or smell.

26.5. Standards: Alternative standards for valves--skip period leak detection and repair.

a. An owner or operator shall comply initially with the requirements for valves in gas/vapor service and valves in light liquid service, as described in section 26.4.

b. After two consecutive quarterly leak detection periods with the percent of valves leaking equal or less than 2.0, an owner or operator may begin to skip one of the quarterly leak detection periods for the valves in gas/vapor and light liquid service.

c. After five consecutive quarterly leak detection periods with the percent of valves leaking equal to or less than 2.0, an owner or operator may begin to skip 3 of the quarterly leak detection periods for the valves in gas/vapor and light liquid service.

d. If the percent of valves leaking is greater than 2.0, the owner or operator shall comply with the requirements as described in section 26.4. but can again elect to use the requirements in section 26.5.

e. The percent of valves leaking shall be determined by dividing the sum of valves found leaking during current monitoring and valves for which repair has been delayed by the total number of valves subject to the requirements of this section 26.

f. An owner or operator shall keep a record of the percent of valves found leaking during each leak detection period.

26.6. Standards: Alternative standards for unsafe-to-monitor valves and difficult-to-monitor valves.

a. Any valve that is designated, as described in section 26.6.a.1., as an unsafe-to-monitor valve is exempt from the requirements of section 26.4. if:

1. The owner or operator of the valve demonstrates that the valve is unsafe to monitor because monitoring personnel would be exposed to an immediate danger as a consequence of complying with section 26.4.d.; and

2. The owner or operator of the valve adheres to a written plan that requires monitoring of the valve as frequently as practicable during safe-to-monitor times.

b. Any valve that is designated, as described in section 26.6.b.1., as a difficult-to-monitor valve is exempt from the requirements of section 26.4. if:

1. The owner or operator of the valve demonstrates that the valve cannot be monitored without elevating the monitoring personnel more than 2 meters (m) (6.6 feet [ft]) above a support surface; and

2. The owner or operator of the valve follows a written plan that requires monitoring of the valve at least once per calendar year.

26.7. Standards: Equipment repair program. -- The owner or operator of a petroleum refinery shall:

a. Make a first attempt at repair for any leak not later than 5 calendar days after the leak is detected; and

b. Repair any leak as soon as practicable, but not later than 15 calendar days after it is detected except as provided in section 26.8.

26.8. Standards: Delay of repair.

a. Delay of repair of equipment for which a leak has been detected will be allowed if the repair is technically infeasible without a process unit shutdown. Repair of such equipment shall occur before the end of the next process unit shutdown.

b. Delay of repair of equipment will be allowed for equipment that is isolated from the process and that does not remain in VOC service.

c. Delay of repair beyond a process unit shutdown will be allowed for a valve, if valve assembly replacement is necessary during the process unit shutdown, valve assembly supplies have been depleted, and valve assembly supplies had been sufficiently stocked before the supplies were depleted. Delay of repair beyond the next process unit shutdown will not be allowed unless the next process unit shutdown occurs sooner than 6 months after the first process unit shutdown.

26.9. Test methods and procedures.

a. In conducting the tests required to comply with section 26.4., the

owner or operator shall use the test methods specified in section 46.

b. The owner or operator shall test each piece of equipment as required under section 26.4. unless it is demonstrated that a process unit is not in VOC service, i.e., that the VOC content would never be reasonably expected to exceed 10 percent by weight. For purposes of this demonstration, the following methods and procedures shall be used:

1. Procedures that conform to the general methods in ASTM E260, E168 and E169 shall be used to determine the percent VOC content in the process fluid that is contained in or contacts a piece of equipment.

2. Where the test methods in section 26.9.b.1. also measure exempt compounds, these compounds may be excluded from the total quantity of organic compounds in determining the VOC content of the process fluid.

3. Engineering judgment may be used to estimate the VOC content, if a piece of equipment had not been shown previously to be in VOC service. If the Director disagrees with the judgment, sections 26.9.b.1. and 26.9.b.2. shall be used to resolve the disagreement.

c. The owner or operator shall demonstrate that a piece of equipment is in light liquid service by showing that:

1. All of the following conditions apply:

A. The vapor pressure of one or more of the components is greater than 0.3 kiloPascals (kPa) at 20°C (0.09 inches of Mercury [in Hg] at 68°F); standard reference texts or ASTM D2879 shall be used to determine the vapor pressures;

B. The total concentration of the pure components having a vapor pressure greater than 0.3 kPa at 20°C (0.09 in Hg at 68°F) is equal to or greater than 20 percent by weight; and

C. The fluid is a liquid at operating conditions; or

2. The percent VOC evaporated is greater than 10 percent at 150°C (302°F) as determined by ASTM D86.

d. Samples used in conjunction with sections 26.9.b. and 26.9.c. shall be representative of the process fluid that is contained in or contacts the equipment.

26.10. Recordkeeping requirements.

a. Each owner or operator subject to the provisions of this section 26. shall comply with the recordkeeping requirements of this section 26. Except as noted, these

records shall be maintained in a readily accessible location for a minimum of 3 years and shall be made available to the Director upon verbal or written request.

b. An owner or operator of more than one affected facility subject to the provisions of this section 26. may comply with the recordkeeping requirements for these facilities in one recordkeeping system if the system identifies each record by each facility.

c. When each leak is detected as specified in section 26.4., the following information shall be recorded in a log and shall be kept for 3 years in a readily accessible location:

1. The instrument and operator identification numbers and the equipment identification number;

2. The date the leak was detected and the dates of each attempt to repair the leak;

3. The repair methods employed in each attempt to repair the leak;

4. The notation "Above 10,000" if the maximum instrument reading measured by the methods specified in section 46. after each repair attempt is equal to or greater than 10,000 ppm;

5. The notation "Repair Delayed" and the reason for the delay if a leak is not repaired within 15 calendar days after discovery of the leak;

6. The signature of the owner or operator (or designate) whose decision it was that repair could not be effected without a process unit shutdown;

7. The expected date of successful repair of the leak if a leak is not repaired within 15 days;

8. The dates of process unit shutdowns that occur while the equipment is unrepaired; and

9. The date of successful repair of the leak.

d. A list of identification numbers of equipment in vacuum service shall be recorded in a log that is kept in a readily accessible location.

e. The following information pertaining to all valves subject to the requirements of section 26.6. shall be recorded in a log that is kept for 3 years in a readily accessible location:

1. A list of identification numbers for valves that are designated as

unsafe to monitor, an explanation for each valve stating why the valve is unsafe to monitor, and the plan for monitoring each valve; and

2. A list of identification numbers for valves that are designated as difficult to monitor, an explanation for each valve stating why the valve is difficult to monitor, and the schedule for monitoring each valve.

f. The following information for valves complying with section 26.5. shall be recorded in a log that is kept for 3 years in a readily accessible location:

1. A schedule of monitoring; and

2. The percent of valves found leaking during each monitoring period as noted in section 26.5.f.

g. Information and data used to demonstrate that a piece of equipment is not in VOC service shall be recorded in a log that is kept for 3 years in a readily accessible location for use in determining exemptions as provided in section 26.1.

26.11. Reporting. -- The owner or operator of any facility containing sources subject to this section 26. shall comply with the requirements in sections 5.1. and 5.2.

§45-21-27. Petroleum Liquid Storage in External Floating Roof Tanks.

27.1. Applicability.

a. This section 27. applies to any petroleum liquid storage tank that is equipped with an external floating roof and that has a capacity greater than 150,000 liters (L) (40,000 gallons [gal]).

b. This section 27. does not apply to any petroleum liquid storage tank that:

1. Is used to store waxy, heavy pour crude oil;

2. Has a capacity less than 1,600,000 L (420,000 gal) and is used to store produced crude oil and condensate prior to lease custody transfer;

3. Contains a petroleum liquid with a maximum true vapor pressure less than 10.5 kiloPascals (kPa) (1.5 pounds per square inch atmospheric [psia]) provided that records are kept consistent with section 27.5.b.;

4. Contains a petroleum liquid with a maximum true vapor pressure less than 27.6 kPa (4.0 psia); and

A. Is of welded construction; and

B. Presently possesses a metallic-type shoe seal, a liquid-mounted foam seal, a liquid-mounted liquid-filled type seal, or other closure device of demonstrated equivalence approved by the Director and the U.S. EPA; or

5. Is of welded construction, equipped with a metallic-type shoe primary seal and has a secondary seal from the top of the shoe seal to the tank wall (shoe-mounted secondary seal).

27.2. Definitions. -- As used in this section 27., all terms not defined herein shall have the meaning given them in section 2.

a. "Liquid-mounted seal" means a primary seal mounted in continuous contact with the liquid between the tank wall and the floating roof around the circumference of the tank.

b. "Vapor-mounted seal" means a primary seal mounted so there is an annular vapor space underneath the seal. The annular vapor space is bounded by the bottom of the primary seal, the tank wall, the liquid surface, and the floating roof.

c. "Waxy, heavy-pour crude oil" means a crude oil with a pour point of 10°C (50°F) or higher as determined by the American Society for Testing and Materials

Standard D97-66, "Test for Pour Point of Petroleum Oils."

27.3. Standards. -- No owner of a petroleum liquid storage vessel subject to this section 27. shall store a petroleum liquid in that tank unless:

a. The tank has been fitted with:

1. A continuous secondary seal extending from the floating roof to the tank wall (rim-mounted secondary seal); or

2. A closure or other device that controls VOC emissions with an effectiveness equal to or greater than a seal required under section 27.3.a.1. and is approved by the Director and the U.S. EPA; and

b. All seal closure devices meet the following requirements:

1. There are no visible holes, tears, or other openings in the seal(s) or seal fabric;

2. The seal(s) are intact and uniformly in place around the circumference of the floating roof between the floating roof and the tank wall;

3. For vapor-mounted primary seals, the accumulated area of gaps exceeding 0.32 centimeters (cm) (0.125 inches [in]) in width between the secondary seal and the tank wall shall not exceed 21.2 square centimeters per meter (cm^2/m) (1.0 square inches per foot [in^2/ft]) of tank diameter, as determined by the method in section 27.6.; and

c. All openings in the external floating roof, except for automatic bleeder vents, rim space vents, and leg sleeves, are:

1. Equipped with covers, seals, or lids in the closed position except when the openings are in actual use;

2. Equipped with projections into the tank that remain below the liquid surface at all times; and

d. Automatic bleeder vents are closed at all times except when the roof is being floated off or being landed on the roof leg supports;

e. Rim vents are set to open when the roof is being floated off the leg supports or at the manufacturer's recommended setting; and

f. Emergency roof drains are provided with slotted membrane fabric covers or equivalent covers which cover at least 90 percent of the area of the opening.

27.4. Inspections. -- The owner or operator of a petroleum liquid storage tank with an external floating roof subject to this section 27. shall:

a. Perform routine inspections semi-annually in order to ensure compliance with section 27.3. (the inspections shall include a visual inspection of the secondary seal gap); and

b. Measure the secondary seal gap annually in accordance with section 27.6. when the floating roof is equipped with a vapor-mounted primary seal.

27.5. Recordkeeping.

a. The owner or operator of any petroleum liquid storage tank with an external floating roof subject to this section 27. shall maintain the following records in a readily accessible location for at least 3 years and shall make copies of the records available to the Director upon verbal or written request:

1. Records of the types of petroleum liquids stored;

2. Records of the maximum true vapor pressure of the liquid as stored; and

3. Records of the results of the inspections performed in accordance with section 27.4.

b. The owner or operator of a petroleum liquid storage vessel with an external floating roof exempted from this section 27. by section 27.1.b.3., but containing a petroleum liquid with a true vapor pressure greater than 7.0 kPa (1.0 psi), shall maintain the following records in a readily accessible location for at least 3 years and shall make copies of the records available to the Director upon verbal or written request:

1. Records of the average monthly storage temperature;

2. Records of the type of liquid stored; and

3. Records of the maximum true vapor pressure for all petroleum liquids with a true vapor pressure greater than 7.0 kPa (1.0 psia).

c. The Director may, upon written notice, require more frequent inspections or modify the monitoring and recordkeeping requirements, when necessary to accomplish the purposes of this section 27.

27.6. Compliance provisions. -- Compliance with section 27.3.b.3. shall be determined by:

a. Physically measuring the length and width of all gaps around the entire circumference of the secondary seal in each place where a 0.32 cm (0.125 in) uniform diameter probe passes freely (without forcing or binding against the seal) between the seal and tank wall; and

b. Summing the area of the individual gaps.

27.7. Reporting. -- The owner or operator of any facility containing sources subject to this section 27. shall comply with the requirements in sections 5.1. and 5.2.

§45-21-28. Petroleum Liquid Storage in Fixed Roof Tanks.

28.1. Applicability.

a. This section 28. applies to any fixed roof petroleum liquid storage tank with a capacity greater than 150,000 liters (L) (40,000 gallons [gal]).

b. This section 28. does not apply to any petroleum liquid storage tank that:

1. Has a capacity of less than 1,600,000 L (420,000 gal) and is used to store produced crude oil and condensate prior to lease custody transfer;

2. Is a horizontal underground storage tank used to store JP-4 jet fuel; or

3. Contains a petroleum liquid with a maximum true vapor pressure less than 10.5 kiloPascals (kPa) (1.5 pounds per square inch atmospheric [psia]), provided that records are maintained consistent with section 28.5.b.

28.2. Definitions. -- As used in this section 28., all terms not defined herein shall have the meaning given them in section 2.

"Internal floating roof" means a cover or roof in a fixed roof tank that rests upon or is floated upon the petroleum liquid being contained and is equipped with a closure seal or seals to close the space between the roof edge and tank shell.

28.3. Standards. -- No owner or operator of a petroleum liquid storage tank subject to this section 28. shall store petroleum liquid in that tank unless:

a. The tank is equipped with:

1. An internal floating roof equipped with a closure seal or seals to close the space between the roof edge and tank wall; or

2. Equally effective alternative control, approved by the Director and the U.S. EPA;

b. The tank is maintained such that there are no visible holes, tears, or other openings in the seal or any seal fabric or materials; and

c. All openings, except stub drains, are equipped with covers, lids, or seals such that:

1. The cover, lid, or seal is in the closed position at all times except

when in actual use;

2. Automatic bleeder vents are closed at all times except when the roof is being floated off or being landed on the roof leg supports; and

3. Rim vents, if provided, are set to open when the roof is being floated off the roof leg supports or at the manufacturer's recommended setting.

28.4. Inspections. -- The owner or operator of a petroleum liquid storage tank with a fixed roof subject to this section 28. shall:

a. Perform routine, semi-annual, visual inspections of the internal floating roof and its closure seal or seals through roof hatches; and

b. Perform a complete inspection of cover and seal whenever the tank is emptied for non-operational reasons or at least every 5 years, whichever is more frequent.

28.5. Recordkeeping.

a. The owner or operator of a petroleum liquid storage tank with a fixed roof subject to this section 28. shall maintain the following records in a readily accessible location for at least 3 years and shall make copies of the records available to the Director upon verbal or written request;

1. Records of the types of petroleum liquids stored in that tank;

2. Records of the maximum true vapor pressure of the liquid as stored; and

3. Records of the results of the inspections required in section 28.4.

b. The owner or operator of a petroleum liquid storage tank with a fixed roof exempted from this section 28. by section 28.1.b., but containing a petroleum liquid with a true vapor pressure greater than 7.0 kPa (1.0 psia), shall maintain the following records in a readily accessible location for at least 3 years and shall make copies of the records available to the Director upon verbal or written request:

1. Records of the average monthly storage temperature;

2. Records of the type of liquid stored; and

3. Records of the maximum true vapor pressure for any petroleum liquid with a true vapor pressure greater than 7.0 kPa (1.0 psia).

28.6. Reporting. -- The owner or operator of any facility containing sources subject

to this section 28. shall comply with the requirements in sections 5.1. and 5.2.

§45-21-29. Leaks from Natural Gas/Gasoline Processing Equipment.

29.1. Applicability.

a. This section 29. applies to all equipment in volatile organic compound (VOC) service in any process unit at any natural gas/gasoline processing facility.

b. This section 29. does not apply to:

1. Any equipment in vacuum service;

2. Any equipment in heavy liquid service; or

3. Wet gas reciprocating compressors in plants that do not have a VOC control device, such as a flare or a continuously burning process heater or boiler.

c. The equipment inspection requirements in section 29.4. do not apply to:

1. Any natural gas/gasoline processing facility with a design field gas capacity of less than 2.8×10^5 standard cubic meters (10×10^6 standard cubic feet) per day that does not fractionate natural gas liquids;

2. Any pump with dual pump seals;

3. Any pressure relief valve that is connected to an operating flare header or vapor recovery device; or

4. Any compressor with a degassing vent that is routed to an operating VOC control device.

29.2. Definitions. -- As used in this section 29., all terms not defined herein shall have the meaning given them in section 2.

a. "Equipment" means each pump, compressor, pressure relief device, sampling connection system, open-ended valve or line, valve, and flange or other connector in VOC service or in wet gas service and any devices or systems required by this section 29.

b. "Field gas" means feedstock gas entering the natural gas processing plant.

c. "[In] gas/vapor service" means that the piece of equipment in VOC service contains process fluid that is in the gaseous state at operating conditions.

d. "[In] heavy liquid service" means that the piece of equipment in VOC

service is not in gas/vapor service or in light liquid service.

e. "[In] light liquid service" means that the piece of equipment in VOC service contains a liquid that meets the following conditions: (1) the vapor pressure of one or more of the components is greater than 0.3 kPa (0.09 in Hg) at 20°C (68°F) (standard reference texts or ASTM D2879 shall be used to determine the vapor pressures); (2) the total concentration of the pure components having a vapor pressure greater than 0.3 kPa (0.09 in Hg) at 20°C (68°F) is equal to or greater than 20 percent by weight; and (3) the fluid is a liquid at operating conditions.

f. "Liquids dripping" means any visible leakage from a seal including spraying, misting, clouding, and ice formation.

g. "Natural gas liquids" means the hydrocarbons, such as ethane, propane, butane, and pentane, that are extracted from field gas.

h. "Natural gas processing plant" (gas plant) means any processing site engaged in the extraction of natural gas liquids from field gas, fractionation of mixed natural gas liquids to natural gas products, or both.

i. "Nonfractionating plant" means any gas plant that does not fractionate mixed natural gas liquids into natural gas products.

j. "Process unit" means equipment assembled for the extraction of natural gas liquids from field gas, the fractionation of the liquids into natural gas products, or other operations associated with the processing of natural gas products. A process unit can operate independently if supplied with sufficient feed or raw materials and sufficient storage facilities for the products.

k. "Reciprocating compressor" means a piece of equipment that increases the pressure of a process gas by positive displacement, employing linear movement of the driveshaft.

l. "[In] vacuum service" means that the equipment in VOC service is operating at an internal pressure which is at least 5 kPa below ambient pressure.

m. "[In] VOC service" means that the piece of equipment contains or contacts a process fluid that is at least 10 percent VOC by weight. The provisions of section 29.9.b. specify how to determine that a piece of equipment is not in VOC service.

n. "[In] wet gas service" means that a piece of equipment contains or contacts the field gas before the extraction step in the process.

29.3. Standards: General. -- The owner or operator of a natural gas/gasoline processing facility subject to this section 29. shall ensure that:

a. Any open-ended line or valve is sealed with a second valve, blind flange, cap, or plug except during operations requiring process fluid flow through the open-ended line or valve;

b. When a second value is used, each open-ended line or valve equipped with a second valve is operated in such a manner that the valve on the process fluid end is closed before the second valve is closed; and

c. When a double block-and-bleed system is used, the bleed valve or line is open only during operations that require venting of the line between the block valves and is closed at all other times.

29.4. Standards: Equipment inspection program. -- The owner or operator of a natural gas/gasoline processing facility subject to this section 29.4. shall conduct the equipment inspection program described in sections 29.4.a. through 29.4.c. using the test methods specified in section 46.

a. The owner or operator of a natural gas/gasoline processing facility subject to this section 29. shall conduct quarterly monitoring of each:

1. Compressor;

2. Pump in light liquid service;

3. Valve in light liquid service, except as provided in sections 29.5. and 29.6.;

4. Valve in gas/vapor service, except as provided in sections 29.5. and 29.6.; and

5. Pressure relief valve in gas/vapor service, except as provided in sections 29.5. and 29.6.

b. The owner or operator of a natural gas/gasoline processing facility subject to this section 29. shall conduct a weekly visual inspection of each pump in light liquid service.

c. The owner or operator of a natural gas/gasoline processing facility subject to this section 29. shall monitor each pressure relief valve within 5 days after each overpressure relief to ensure that the valve has properly reseated and is not leaking, except;

1. Any pressure relief device that is located in a nonfractionating plant that is monitored only by non-plant personnel may be monitored after a pressure release the next time the monitoring personnel are on site, instead of within 5 days; and

2. No pressure relief device described in section 29.4.c.1. shall be allowed to operate for more than 30 days after a pressure release without monitoring.

d. It shall be determined that a leak has been detected when:

1. An instrument reading of 10,000 parts per million (ppm) or greater is measured; or

2. There are indications of liquid dripping from the equipment.

e. When a leak is detected, the owner or operator shall affix a weatherproof, readily visible tag in a bright color such as red or yellow, bearing the equipment identification number and the date on which the leak was detected. This tag shall remain in place until the leaking equipment is repaired. An alternative leak identifier system may be used if the owner or operator demonstrates to the Director that the system is equally as effective. The requirements of this section 29.4.e. apply to any leak detected by the equipment inspection program and to any leak from any equipment that is detected on the basis of sight, sound, or smell.

29.5. Standards: Alternative standards for valves--skip period leak detection and repair.

a. An owner or operator shall comply initially with the requirements for valves in gas/vapor service and valves in light liquid service, as described in section 29.4.

b. After two consecutive quarterly leak detection periods with the percent of valves leaking equal or less than 2.0, an owner or operator may skip one of the quarterly leak detection periods for the valves in gas/vapor and light liquid service.

c. After five consecutive quarterly leak detection periods with the percent of valves leaking equal to or less than 2.0, an owner or operator may begin to skip three of the quarterly leak detection periods for the valves in gas/vapor and light liquid service.

d. If the percent of valves leaking is greater than 2.0, the owner or operator shall comply with the requirements as described in section 29.4. but can again elect to use the requirements in section 29.5.

e. The percent of valves leaking shall be determined by dividing the sum of valves found leaking during current monitoring and valves for which repair has been delayed by the total number of valves subject to the requirements of this section 29.

f. An owner or operator shall keep a record of the percent of valves found leaking during each leak detection period.

29.6. Standards: Alternative standards for valves that are unsafe or difficult to

monitor.

a. Any valve that is designated, as described in section 29.6.a.1., as an unsafe-to-monitor valve is exempt from the requirements of section 29.4. if:

1. The owner or operator of the valve demonstrates that the valve is unsafe to monitor because monitoring personnel would be exposed to an immediate danger as a consequence of complying with section 29.4.; and

2. The owner or operator of the valve adheres to a written plan that requires monitoring of the valve as frequently as practicable during safe-to-monitor times.

b. Any valve that is designated, as described in section 29.6.b.1., as a difficult-to-monitor valve is exempt from the requirements of section 29.4. if:

1. The owner or operator of the valve demonstrates that the valve cannot be monitored without elevating the monitoring personnel more than 2 meters (m) (6.6 feet [ft]) above a support surface; and,

2. The owner or operator of the valve follows a written plan that requires monitoring of the valve at least once per calendar year.

29.7. Standards: Equipment repair program. -- The owner or operator of a natural gas/gasoline processing facility shall:

a. Make a first attempt at repair for any leak not later than 5 calendar days after the leak is detected; and

b. Repair any leak as soon as practicable, but not later than 15 calendar days after it is detected except as provided in section 29.8.

29.8. Standards: Delay of repair.

a. Delay of repair of equipment for which a leak has been detected will be allowed if the repair is technically infeasible without a process unit shutdown. Repair of such equipment shall occur before the end of the next process unit shutdown.

b. Delay of repair of equipment will be allowed for equipment that is isolated from the process and that does not remain in VOC service.

c. Delay of repair beyond a process unit shutdown will be allowed for a valve, if valve assembly replacement is necessary during the process unit shutdown, valve assembly supplies have been depleted, and valve assembly supplies had been sufficiently stocked before the supplies were depleted. Delay of repair beyond the next process unit shutdown will not be allowed unless the next process unit shutdown occurs sooner than

6 months after the first process unit shutdown.

29.9. Test methods and procedures.

a. In conducting the tests required to comply with section 29.4., the owner or operator shall use the test methods specified in section 46.

b. The owner or operator shall test each piece of equipment unless it is demonstrated that a process unit is not in VOC service, i.e., that the VOC content would never be reasonably expected to exceed 10 percent by weight. For purposes of this demonstration, the following methods and procedures shall be used:

1. Procedures that conform to the general methods in ASTM E260, E168 and E169 shall be used to determine the percent VOC content in the process fluid that is contained in or contacts a piece of equipment;

2. Where the test methods in section 29.9.b.1. also measure exempt compounds, these compounds may be excluded from the total quantity of organic compounds in determining the VOC content of the process fluid; and

3. Engineering judgment may be used to estimate the VOC content, if a piece of equipment had not been shown previously to be in VOC service. If the Director disagrees with the judgment, sections 29.9.b.1. and 29.9.b.2. shall be used to resolve the disagreement.

c. The owner or operator shall demonstrate that a piece of equipment is in light liquid service by showing that all of the following conditions apply:

1. The vapor pressure of one or more of the components is greater than 0.3 kiloPascal (kPa) at 20°C (0.09 inches of Mercury [in Hg] at 68°F). Standard reference texts or ASTM D2879 shall be used to determine the vapor pressures;

2. The total concentration of the pure components having a vapor pressure greater than 0.3 kPa at 20°C (0.09 in Hg at 68°F) is equal to or greater than 20 percent by weight; and

3. The fluid is a liquid at operating conditions.

d. Samples used in conjunction with sections 29.9.b. and 29.9.c. shall be representative of the process fluid that is contained in or contacts the equipment.

29.10. Recordkeeping requirements.

a. Each owner or operator subject to the provisions of this section 29. shall comply with the recordkeeping requirements of this section 29.

b. An owner or operator of more than one affected facility subject to the provisions of this section 29. may comply with the recordkeeping requirements for these facilities in one recordkeeping system if the system identifies each record by each facility.

c. When each leak is detected as specified in section 29.4., the following information shall be recorded in a log and shall be kept for 3 years in a readily accessible location:

1. The instrument and operator identification numbers and the equipment identification number;

2. The date the leak was detected and the dates of each attempt to repair the leak;

3. The repair methods employed in each attempt to repair the leak;

4. The notation "Above 10,000" if the maximum instrument reading measured by the methods specified in section 46. after each repair attempt is equal to or greater than 10,000 ppm;

5. The notation "Repair Delayed" and the reason for the delay if a leak is not repaired within 15 calendar days after discovery of the leak;

6. The signature of the owner or operator (or designate) whose decision it was that repair could not be effected without a process unit shutdown;

7. The expected date of successful repair of the leak if a leak is not repaired within 15 days;

8. The dates of process unit shutdowns that occur while the equipment is unrepaired; and

9. The date of successful repair of the leak.

d. A list of identification numbers of equipment in vacuum service shall be recorded in a log that is kept in a readily accessible location.

e. The following information pertaining to all valves subject to the requirements of section 29.6. shall be recorded in a log that is kept for 3 years in a readily accessible location:

1. A list of identification numbers for valves that are designated as unsafe to monitor, an explanation for each valve stating why the valve is unsafe to monitor, and the plan for monitoring each valve; and

2. A list of identification numbers for valves that are designated as difficult to monitor, an explanation for each valve stating why the valve is difficult to monitor, and the schedule for monitoring each valve.

f. The following information pertaining to all valves complying with section 29.5. shall be recorded in a log that is kept for 3 years in a readily accessible location:

1. A schedule of monitoring; and

2. The percent of valves found leaking during each monitoring period.

g. The following information shall be recorded in a log that is kept for 3 years in a readily accessible location for use in determining exemptions as provided in section 29.1.:

1. An analysis demonstrating the design capacity of the affected facility;

2. Information and data used to demonstrate that a piece of equipment is not in VOC service; and

3. Information and data used to demonstrate that a reciprocating compressor is in wet gas service.

29.11. Reporting. -- The owner or operator of any facility containing sources subject to this section 29. shall comply with the requirements in sections 5.1. and 5.2.

§45-21-30. Solvent Metal Cleaning.

30.1. Applicability. -- This section 30. applies to all solvent metal cleaning sources with the following exemptions:

a. Any open top vapor degreasing operation with an open area smaller than 1 square meter (m^2) (10.8 square feet [ft^2]) is exempt from sections 30.3.b.3.B. and 30.3.b.3.D.; and,

b. Any conveyorized degreaser with an air/vapor interface smaller than 2.0 m^2 (21.5 ft^2) is exempt from section 30.3.c.2.

30.2. Definitions. -- As used in this section 30., all terms not defined herein shall have the meaning given them in section 2.

a. "Cold cleaning" means the batch process of cleaning and removing soils from a metal surface by spraying, brushing, flushing, or immersion while maintaining the solvent below its boiling point. Wipe cleaning is not included in this definition.

b. "Conveyorized degreasing" means the process of cleaning and removing soils from a continuous stream of metal parts using either cold or vaporized solvents.

c. "Freeboard height" means, for a cold cleaner, the distance from the liquid solvent level in the degreaser tank to the lip of the tank. For an open-top vapor degreaser, it is the distance from the vapor level in the tank during idling to the lip of the tank. For a vapor-conveyorized degreaser, it is the distance from the vapor level to the bottom of the entrance or exit opening, whichever is lower. For a cold-conveyorized degreaser, it is the distance from the liquid solvent level to the bottom of the entrance or exit opening, whichever is lower.

d. "Freeboard ratio" means the freeboard height divided by the smaller interior dimension (length, width, or diameter) of the degreaser tank.

e. "Open-top vapor degreasing" means the process using condensation of hot solvent vapor to clean and remove soils from a batch of metal parts.

f. "Refrigerator chiller" means a device mounted above both the water jacket and the primary condenser coils which carries a refrigerant that provides a chilled air blanket above the solvent vapor, thereby reducing emissions from the degreaser bath.

g. "Solvent metal cleaning" means the process of cleaning soils from metal surfaces by cold cleaning, open-top vapor degreasing, or conveyorized degreasing.

30.3. Standards.

a. Cold cleaning facilities. -- The owner or operator of a cold cleaning facility shall:

1. Equip the cleaner with a cover that is easily operated with one hand, if:

A. The solvent true vapor pressure is greater than 2 kiloPascals (kPa) (15 millimeters of Mercury [mm Hg] or 0.3 pounds per square inch [psi]) measured at 38°C (100°F) by ASTM D323-72;

B. The solvent is agitated; or

C. The solvent is heated;

2. Equip the cleaner with an internal drainage facility so that parts are enclosed under the cover while draining if the solvent true vapor pressure is greater than 4.3 kPa (32 mm Hg or 0.6 psi) measured at 38°C (100°F) by ASTM D323-72, except that the drainage facility may be external for applications where an internal type cannot fit into the cleaning system;

3. Implement one of the following control measures if the solvent true vapor pressure is greater than 4.3 kPa (32 mm of mercury or 0.6 psi) measured at 38°C (100°F) by ASTM D323-72, or if the solvent is heated above 50°C (120°F):

A. Freeboard that gives a freeboard ratio greater than or equal to 0.7; or

B. Water cover at least 2.54 centimeters (1 inch) in depth (solvent shall be insoluble in and heavier than water); or

C. Another system of equivalent control, such as a refrigerated chiller or a carbon adsorber, approved by the Director;

4. Provide a permanent, legible, conspicuous label, summarizing the operating requirements;

5. Store waste solvent in covered containers;

6. Close the cover whenever parts are not being handled in the cleaner;

7. Drain the cleaned parts until dripping ceases;

8. If used, supply a solvent spray that is a solid fluid stream (not a fine, atomized, or shower-type spray) at a pressure that does not exceed 10 pounds per

square inch gauge (psig); and

9. Degrease only materials that are neither porous nor absorbent.

b. Open top vapor degreasers. -- Except as provided under section 30.1.a., the owner or operator of an open top vapor degreaser shall:

1. Equip the vapor degreaser with a cover that can be opened and closed easily without disturbing the vapor zone;

2. Provide the following safety switches:

A. A vapor level thermostat that shuts off the pump heat if the condenser coolant is either not circulating or too warm; and

B. A spray safety switch that shuts off the spray pump if the vapor level drops more than 10 centimeters (cm) (4 inches [in]); and

3. Implement one of the following control measures:

A. Freeboard ratio greater than or equal to 0.75 and, if the degreaser opening is greater than 1 m^2 (10.8 ft^2), a powered cover;

B. Refrigerated chiller;

C. Enclosed design (cover or door opens only when the dry part is actually entering or exiting the degreaser);

D. Carbon adsorption system, with ventilation greater than or equal to 15 cubic meters per minute per square meter ($m^3/min/m^2$) (50 cubic feet per minute per square foot[$ft^3/min/ft^2$]) of air/vapor area (when cover is open), and exhausting less than 25 parts per million (ppm) of solvent averaged over one complete adsorption cycle, or 24 hours, whichever is less; or

E. A control system, demonstrated to have a capture efficiency equivalent to or greater than any of the above and approved by the Director and the U.S. EPA;

4. Keep the cover closed at all times except when processing work loads through the degreaser;

5. Minimize solvent carryout by:

A. Racking parts so that solvent will drain freely and not be trapped;

B. Moving parts in and out of the degreaser at less than 3.3 meters per minute (m/min) (11 feet per minute [ft/min]);

C. Holding the parts in the vapor zone at least 30 seconds or until condensation ceases, whichever is longer;

D. Tipping out any pools of solvent on the cleaned parts before removal from the vapor zone; and

E. Allowing parts to dry within the degreaser for at least 15 seconds or until visually dry, whichever is longer;

6. Degrease only materials that are neither porous nor absorbent;

7. Occupy no more than one-half of the degreaser's open top area with a workload;

8. Always spray within the vapor level;

9. Repair solvent leaks immediately, or shut down the degreaser;

10. Store waste solvent only in covered containers;

11. Operate the cleaner such that water cannot be visually detected in solvent exiting the water separator;

12. Use no ventilation fans near the degreaser opening, and ensure that room exhaust ventilation does not exceed 20 $m^3/min/m^2$ (65 $ft^3/min/ft^2$) of degreaser open area, unless a higher rate is necessary to meet OSHA requirements; and

13. Provide a permanent, conspicuous label, summarizing the operating procedures of sections 30.3.b.4. through 30.3.b.12.

c. Conveyorized degreasers. -- Except as provided under section 30.1.b., the owner or operator of a conveyorized degreaser shall:

1. Use no workplace fans near the degreaser opening, and ensure that exhaust ventilation does not exceed 20 $m^3/min/m^2$ (65 $ft^3/min/ft^2$) of degreaser opening, unless a higher rate is necessary to meet OSHA requirements;

2. Install one of the following control devices:

A. Refrigerated chiller;

B. Carbon adsorption system, with ventilation greater than or

equal to 15 $m^3/min/m^2$ (50 $ft^3/min/ft^2$) of air/vapor area (when downtime covers are open), and exhausting less than 25 ppm of solvent by volume averaged over a complete adsorption cycle; or

C. A system demonstrated to have a capture efficiency equivalent to or greater than the devices listed in section 30.3.c.2.A. or section 30.3.c.2.B. and approved by the Director and the U.S. EPA.

3. Equip the cleaner with equipment, such as a drying tunnel or rotating (tumbling) basket, sufficient to prevent cleaned parts from carrying out solvent liquid or vapor;

4. Provide the following safety switches:

A. A condenser flow switch and thermostat that shut off the pump heat if the condenser coolant is either not circulating or too warm;

B. A spray safety switch which shuts off the spray pump or the conveyor if the vapor level drops more than 10 cm (4 in); and

C. A vapor level control thermostat that shuts off the pump heat when the vapor level rises too high;

5. Minimize openings during operation so that entrances and exits will silhouette workloads with an average clearance between the parts and the edge of the degreaser opening of less than 10 cm (4 in) or less than 10 percent of the width of the opening;

6. Provide downtime covers for closing off the entrance and exit during shutdown hours;

7. Minimize carryout emissions by:

A. Racking parts so that solvent will drain freely from parts and not be trapped; and

B. Maintaining the vertical conveyor speed at less than 3.3 m/min (11 ft/min);

8. Store waste solvent only in covered containers;

9. Repair solvent leaks immediately, or shut down the degreaser;

10. Operate the cleaner such that water cannot be visually detected in solvent exiting the water separator;

11. Place downtime covers over entrances and exits of the conveyorized degreaser at all times when the conveyors and exhausts are not being operated; and

12. Degrease only materials that are neither porous nor absorbent.

30.4. Test methods. -- Compliance with sections 30.3.a.1. through 30.3.a.3., 30.3.b.3.D., 30.3.b.12., 30.3.c.1., and 30.3.c.2.B. shall be determined by applying the following test methods, which are found at 40 CFR Part 60, Appendix A, as appropriate:

a. Methods 1-4 for determining flow rates;

b. Method 18 for determining gaseous organic compound emissions by gas chromatography;

c. Method 25 for determining total gaseous non-methane organic emissions as carbon;

d. Method 25A or 25B for determining total gaseous organic concentrations using flame ionization or non-dispersive infrared analysis; and

e. ASTM D323-72 for measuring solvent true vapor pressure.

30.5. Recordkeeping. -- Each owner or operator of a solvent metal cleaning source subject to this section 30. shall maintain the following records in a readily accessible location for at least 3 years and shall make these records available to the Director upon verbal or written request:

a. A record of central equipment maintenance, such as replacement of the carbon in a carbon adsorption unit.

b. The results of all tests conducted in accordance with the requirements in section 30.4.

30.6. Reporting. -- The owner or operator of any facility containing sources subject to this section 30. shall:

a. Comply with the initial compliance certification requirements of section 5.1.;

b. Comply with the requirements of section 5.2. regarding reports of excess emissions; and

c. Comply with the requirements of section 5.3. for excess emissions related to any control devices used to comply with sections 30.3.a.3.C., 30.3.b.3.D. or

30.3.b.3.E., and 30.3.c.2.B. or 30.3.c.2.C.

§45-21-31. Cutback and Emulsified Asphalt.

31.1. Applicability. -- This section 31. applies to the manufacture, mixing, storage, use, and application of cutback and emulsified asphalts. No exemptions are allowable based on the size or throughput of an operation.

31.2. Definitions. -- As used in this section 31., all terms not defined herein shall have the meaning given them in section 2.

a. "Asphalt" means a dark-brown to black cementitious material (solid, semisolid, or liquid in consistency) of which the main constituents are bitumens that occur naturally or are a residue of petroleum refining.

b. "Cutback asphalt" means asphalt cement that has been liquefied by blending with petroleum solvents (diluents). Upon exposure to atmospheric conditions, the diluents evaporate, leaving the asphalt cement to perform its function.

c. "Emulsified asphalt" means an emulsion of asphalt cement and water that contains a small amount of an emulsifying agent; it is a heterogeneous system containing two normally immiscible phases (asphalt and water) in which the water forms the continuous phase of the emulsion, and minute globules of asphalt form the discontinuous phase.

d. "Ozone season" means the calendar period beginning April 1 and ending October 31.

e. "Penetrating prime coat" means an application of low-viscosity liquid asphalt to an absorbent surface. It is used to prepare an untreated base for an asphalt surface. The prime coat penetrates the base, plugs the voids, and hardens and helps bind the top to the overlying asphalt course. The penetrating prime coat also reduces the necessity of maintaining an untreated base course prior to placing the asphalt pavement.

31.3. Standards.

a. No person shall cause, allow, or permit the manufacture, mixing, storage, use, or application of cutback asphalts during the ozone season without approval of the Director as provided in section 31.3.b.

b. The Director may approve the manufacture, mixing, storage, use or application of cutback asphalts where:

1. Long-life stockpile storage is necessary; or

2. The cutback asphalt is to be used solely as a penetrating prime coat.

3. During the ozone season, no person shall cause, allow, or permit the manufacturing, mixing, storage, or use of emulsified asphalt that contains any volatile organic compound (VOC).

31.4. Recordkeeping. -- The owner or operator of any facility subject to this section 31. shall maintain records of the manufacture, mixing, storage, use, or application of any asphalt containing VOC during the ozone season. These records shall be maintained in a readily accessible location for a minimum of 3 years and shall be made available to the Director upon verbal or written request.

§45-21-32. Manufacture of Synthesized Pharmaceutical Products.

32.1. Applicability. -- This section 32. applies to the following sources of volatile organic compounds (VOC) at all synthesized pharmaceutical manufacturing facilities:

a. Reactors;

b. Distillation operations;

c. Crystallizers;

d. Centrifuges;

e. Vacuum dryers;

f. Air dryers;

g. Production equipment exhaust systems;

h. Rotary vacuum filters and other filters;

i. In-process tanks; and

j. Leaks.

32.2. Definitions. -- As used in this section 32., all terms not defined herein shall have the meaning given them in section 2.

a. "Production equipment exhaust system" means a device for collecting and directing out of the work area VOC fugitive emissions from reactor openings, centrifuge openings, and other vessel openings for the purpose of protecting workers from excessive VOC exposure.

b. "Reactor" means a vat or vessel, which may be jacketed to permit temperature control, designed to contain chemical reactions.

c. "Separation operation" means a process that separates a mixture of compounds and solvents into two or more components. Specific mechanisms include extraction, centrifugation, filtration, and crystallization.

d. "Synthesized pharmaceutical manufacturing" means manufacture of pharmaceutical products and intermediates by chemical synthesis. The production and recovery of materials produced via fermentation, extraction of organic chemicals from vegetative materials or animal tissues, and formulation and packaging of the product are not considered synthesized pharmaceutical manufacturing.

32.3. Standards.

a. Reactors, distillation operations, crystallizers, centrifuges, and vacuum dryers. -- The owner or operator of a synthesized pharmaceutical manufacturing facility subject to this section 32. shall control the VOC emissions from all vents from reactors, distillation operations, crystallizers, centrifuges, and vacuum dryers at the facility that emit 6.8 kilograms per day (kg/day) (15 pounds per day [lb/day]) or more of VOC as determined by the procedure in "Control of Volatile Organic Emissions from Manufacture of Synthesized Pharmaceutical Products," Appendix B, EPA-450/2-78-029, December 1978. Surface condensers or equivalent controls shall be used, provided that:

1. If surface condensers are used, the condenser outlet gas temperature shall not exceed the allowable temperature limit described for each associated vapor pressure in the following table; or

Allowable condenser outlet gas temperature, °C	VOC vapor pressure at 20°C, kPa (psi)	
-25	>40.01	(5.8)
-15	>20.0	(2.9)
0	>10.0	(1.5)
10	>7.0	(1.0)
25	>3.5	(0.5)

2. If equivalent controls such as carbon absorption or incineration are used, the VOC emissions shall be reduced by at least as much as they would be by using a surface condenser. The owner or operator shall calculate the efficiency equivalent to a condenser in accordance with the procedures specified on pages 4-2 through 4-6 in "Control of Volatile Organic Emissions from Manufacture of Synthesized Pharmaceutical Products," Appendix B, EPA-450/2-78-029, December 1978.

b. Air dryers and production equipment exhaust systems. -- The owner or operator of a synthesized pharmaceutical manufacturing facility subject to this section 32. shall reduce the VOC emissions from all air dryers and production equipment exhaust systems:

1. By at least 90 percent if emissions are 150 kg/day (330 lb/day) or more of VOC; or

2. To 15.0 kg/day (33 lb/day) or less if emissions are less than 150 kg/day (330 lb/day) of VOC.

c. Storage tanks. -- The owner or operator of a synthesized

pharmaceutical manufacturing facility subject to this section 32. shall reduce the VOC emissions from storage tanks by:

1. Providing a vapor balance system or equivalent control that is at least 90 percent effective in reducing emissions from truck or railcar deliveries to storage tanks with capacities greater than 7,500 liters (L) (2,000 gallons [gal]) that store VOC with vapor pressures greater than 28.0 kiloPascals (kPa) (4.1 pounds per square inch [psi]) at 20°C (68°F); and

2. Installing pressure/vacuum conservation vents set at 0.2 kPa (0.03 pounds per square inch atmospheric [psia]) on all storage tanks that store VOC with vapor pressures greater than 10.0 kPa (1.5 psi) at 20°C (68°F).

d. Centrifuges, rotary vacuum filters, and other filters. -- The owner or operator of a synthesized pharmaceutical facility subject to this section 32. shall enclose all centrifuges, rotary vacuum filters, and other filters having an exposed liquid surface where the liquid contains VOC and exerts a total VOC vapor pressure of 3.50 kPa (0.5 psi) or more at 20°C (68°F).

e. In-process tanks. -- The owner or operator of a synthesized pharmaceutical facility subject to this section 32. shall install covers on all in-process tanks that contain VOC at any time. These covers shall remain closed, unless production, sampling, maintenance, or inspection procedures require operator access.

f. Leaks. -- The owner or operator of a synthesized pharmaceutical manufacturing facility subject to this section 32. shall repair all leaks from which a liquid containing VOC can be observed running or dripping. The repair shall be completed as soon as practicable but no later than 15 calendar days after the leak is found. If the leaking component cannot be repaired until the process is shut down, the leaking component shall then be repaired before the process is restarted.

32.4. Testing. -- The owner or operator of any facility containing sources subject to this section 32. shall comply with the testing requirements in section 45.

32.5. Monitoring requirements for air pollution control equipment.

a. At a minimum, continuous monitors for the following parameters shall be installed on air pollution control equipment used to control sources subject to this section 32.:

1. Destruction device combustion temperature;

2. Temperature rise across a catalytic incinerator bed;

3. VOC concentration on a carbon adsorption unit to determine

breakthrough;

4. Outlet gas temperature of a refrigerated condenser; and

5. Temperature of a non-refrigerated condenser coolant supply system.

b. Each monitor shall be equipped with a recording device.

c. Each monitor shall be calibrated quarterly.

d. Each monitor shall operate at all times while the associated control equipment is operating.

32.6. Recordkeeping.

a. The owner or operator of a pharmaceutical manufacturing facility subject to this section 32. shall maintain the following records:

1. Parameters listed in section 32.5. shall be recorded; and

2. For sources subject to this section 32., the solvent true vapor pressure as determined by ASTM D323-72 shall be recorded for every process.

b. For any leak subject to section 32.3.f., which cannot be readily repaired within 1 hour after detection, the following records shall be kept:

1. The name of the leaking equipment;

2. The date and time the leak is detected;

3. The action taken to repair the leak; and

4. The date and time the leak is repaired.

32.7. Reporting. -- The owner or operator of any facility containing sources subject to this section 32. shall comply with the requirements in sections 5.1. and 5.2.

§45-21-33. [RESERVED]

§45-21-34. Graphic Arts Systems.

34.1. Applicability.

a. This section 34. applies to any packaging rotogravure, publication rotogravure, or flexographic printing press at any facility whose maximum theoretical emissions of volatile organic compound (VOC) without control devices from all printing presses are greater than or equal to 90.7 megagrams (Mg) (100 tons) per year. An owner or operator of a facility whose emissions are below this applicability threshold shall comply with the certification, recordkeeping, and reporting requirements of section 34.7.a.

34.2. Definitions. -- As used in this section 34., all terms not defined herein shall have the meaning given them in section 2.

a. "Flexographic printing press" means a printing press that uses a roll printing technique in which the pattern to be applied is raised above the printing roll and the image carrier is made of rubber or other elastomeric materials.

b. "Packaging rotogravure printing press" means a rotogravure printing press used to print on paper, paper board, metal foil, plastic film, and other substrates that are, in subsequent operations, formed into packaging products and labels, and other nonpublication products.

c. "Printing press" means equipment used to apply words, pictures, or graphic designs to either a continuous substrate or a sheet. A continuous substrate consists of paper, plastic, or other material that is unwound from a roll, passed through coating or ink applicators and any associated drying areas. The press includes all coating and ink applicators and drying areas between unwind and rewind of the continuous substrate. A sheet consists of paper, plastic, or other material that is carried through the process on a moving belt. The press includes all coating and ink applicators and drying operations between the time that the sheet is put on the moving belt until it is taken off.

d. "Publication rotogravure printing press" means a rotogravure printing press on which the following paper products are printed:

1. Catalogues, including mail order and premium;

2. Direct mail advertisements, including circulars, letters, pamphlets, cards, and printed envelopes;

3. Display advertisements, including general posters, outdoor advertisements, car cards, window posters; counter and floor displays; point-of-purchase, and other printed display material;

4. Magazines, Books;

5. Miscellaneous advertisements, including brochures, pamphlets, catalogue sheets, circular folders, announcements, package inserts, book jackets, market circulars magazine inserts, and shopping news;

6. Newspapers, magazine and comic supplements for newspapers, and pre-printed newspaper inserts, including hi-fi and spectacolor rolls and sections;

7. Periodicals; or

8. Telephone and other directories, including business reference services.

e. "Roll printing" means the application of words, designs, and pictures to a substrate, usually by means of a series of rolls each with only partial coverage.

f. "Rotogravure printing press" means any printing press designed to print on a substrate using a gravure cylinder.

34.3. Standards.

a. No owner or operator of a packaging rotogravure or flexographic printing press subject to this section 34. shall apply any coating or ink unless the VOC content is equal to or less than one of the following:

1. 40 percent VOC by volume of the coating or ink, minus water, as applied;

2. 25 percent VOC by volume of the volatile content in the coating or ink, as applied; or

3. 0.5 kilogram (kg) VOC per kg (0.5 pound [lb] VOC per lb) coating solids, as applied.

b. No owner or operator of a publication rotogravure printing press subject to this section 34. shall apply any coating or ink unless the VOC content is equal to or less than one of the following:

1. 40 percent VOC by volume of the coating or ink, minus water, as applied; or

2. 25 percent VOC by volume of the volatile content in the coating or ink, as applied.

c. As an alternative to compliance with the limits in section 34.3.a. or section 34.3.b., an owner or operator of a packaging rotogravure, publication rotogravure, or

flexographic printing press may comply with the requirements of this section 34. by meeting the requirements of section 34.4. or section 34.5.

34.4. Daily-weighted average limitations.

a. No owner or operator of a packaging rotogravure, publication rotogravure, or flexographic printing press shall apply coatings or inks on the subject printing press unless the daily-weighted average, by volume, VOC content of all coatings and inks, as applied, each day on the subject printing press does not exceed the limitation specified in either section 34.3.a.1. or section 34.3.b.1. [as determined by section 34.4.d.]; section 34.3.a.2. or section 34.3.b.2. [as determined by section 34.4.e.]; or, in the case of packaging rotogravure or flexographic printing, section 34.3.a.3. [as determined by section 34.4.f.] of this section 34.

b. An owner or operator may comply with the daily-weighted average limitation by grouping coatings or inks used on a printing press into two categories that meet the conditions in sections 34.4.b.1. and 34.4.b.2. of this section. Any use of averaging between the two categories of coating or inks used on a packaging rotogravure press or on a flexographic press requires compliance with the emission standard in section 34.3.a.3., as determined by the equation in section 34.4.f.

1. The daily-weighted average VOC content for the first category must comply with section 34.3.a.1. or section 34.3.b.1., as determined by applying the equation in section 34.4.d. to the coatings or inks in this first category.

2. The daily weighted-average VOC content for the second category must comply with section 34.3.a.2. or section 34.3.b.2., as determined by applying the equation in section 34.4.e. to the coatings or inks in this second category.

c. Compliance with this section 34.4. shall be demonstrated through the applicable coating or ink analysis test methods and procedures specified in section 42. and the recordkeeping and reporting requirements specified in section 34.7.c.

d. The following equation shall be used to determine if the weighted average VOC content of all coatings and inks, as applied, each day on the subject printing press exceeds the limitation specified in section 34.3.a.1. or section 34.3.b.1.:

$$VOC_{(i)\,(A)} = \frac{\sum_{i=1}^{n} L_i \; V_{VOCi}}{\sum_{i=1}^{n} L_i \; (\; V_{si} + V_{VOCi} \;)} \; x \; 100$$

where:

$VOC_{(i)(A)}$ = The weighted average VOC content in units of percent VOC by volume of the volatile content of all coatings and inks (minus water and exempt compounds) used each day;

i = Subscript denoting a specific coating or ink, as applied;

n = The number of different coatings and/or inks, as applied, each day on a printing press;

L_i = The liquid volume of each coating or ink, as applied, used that day in units of liters (L) (gallons [gal]);

V_{si} = The volume fraction of solids in each coating or ink, as applied; and

V_{VOCi} = The volume fraction of VOC in each coating or ink, as applied.

e. The following equation shall be used to determine if the weighted average VOC content of all coatings and inks, as applied, each day on the subject printing press exceeds the limitation specified in section 34.3.a.2. or section 34.3.b.2.:

$$VOC_{(i)\ (B)} = \frac{\sum_{i=1}^{n} L_i\ V_{VOCi}}{\sum_{i=1}^{n} L_i\ V_{VCi}} \times 100$$

where:

$VOC_{(i)(B)}$= The weighted average VOC content in units of percent VOC by volume of the volatile content of all coatings and inks used each day;

i = Subscript denoting a specific coating or ink, as applied;

n = The number of different coatings and/or inks, as applied, each day on each printing press;

L_i = The liquid volume of each coating or ink, as applied, in units of L (gal);

V_{VOCi} = The volume fraction of VOC in each coating or ink, as applied; and

V_{VCi} = The volume fraction of volatile matter in each coating or ink, as applied.

f. The following equation shall be used to determine if the weighted average VOC content of all coatings and inks, as applied, each day on the subject printing press exceeds the limitation specified in section 34.3.a.3.:

$$VOC_{(i)\ (C)} = \frac{\sum_{i=1}^{n} L_i\ D_i\ W_{VOCi}}{\sum_{i=1}^{n} L_i\ D_i\ W_{si}}$$

where:

$VOC_{(i)(C)}$ = The weighted average VOC content in units of mass of VOC per mass of

coating solids;

i = Subscript denoting a specific coating or ink, as applied;

n = The number of different coatings and/or inks, as applied, each day on a printing press;

L_i = The liquid volume of each coating or ink, as applied, used on the day in units of L (gal);

D_i = The density of each coating or ink, as applied, in units of mass of coating or ink per unit volume of coating or ink;

W_{VOCi} = The weight fraction of VOC in each coating or ink, as applied; and

W_{si} = The weight fraction of solids in each coating or ink, as applied.

34.5. Control devices. -- No owner or operator of a packaging rotogravure, publication rotogravure, or flexographic printing press equipped with a control system shall operate the printing press unless the owner or operator meets the following requirements:

a. A carbon adsorption control device is used that reduces the VOC emissions delivered from the capture system to the control device by at least 90 percent by weight;

b. An incineration control device is used to reduce VOC emissions delivered from the capture system to the control device by at least 90 percent, by weight;

c. Any other VOC emission control device is used to reduce the VOC emissions delivered from the capture system to the control device by at least 90 percent; and

d. The printing press is equipped with a capture system and control device that provides an overall emission reduction efficiency of at least:

1. 75 percent for a publication rotogravure printing press;

2. 65 percent for a packaging rotogravure printing press; or

3. 60 percent for a flexographic printing press.

34.6. Test methods. -- The VOC content of each coating and ink and the efficiency of each capture system and control device shall be determined by the applicable test methods and procedures specified in sections 42. and 44. to establish the records required under section 34.7.

34.7. Recordkeeping and reporting.

a. Requirements for exempt sources. -- By one year from May 31, 1993, any owner or operator of a printing press that is exempted from this section 34. because of the criteria in section 34.1. shall comply with the following:

1. Initial certification. -- The owner or operator shall certify to the Director that the facility is exempt under the provisions of section 34.1. Such certification shall include:

A. The name and location of the facility;

B. The address and telephone number of the person responsible for the facility;

C. A declaration that the facility is exempt from this section 34. because of the criteria in section 34.1.; and

D. Calculations demonstrating that total potential emissions of VOC from all flexographic and rotogravure printing presses at the facility are and will be less than 90.7 Mg (100 tons) per calendar year before the application of capture systems and control devices. Total potential emissions of VOC for a flexographic or rotogravure printing facility is the sum of potential emissions of VOC from each flexographic and rotogravure printing press at the facility. The following equation shall be used to calculate total potential emissions of VOC per calendar year before the application of capture systems and control devices for each flexographic and rotogravure printing press at the facility:

$$E_p = A \times B$$

where:

E_P = Total potential emissions of VOC from one flexographic or rotogravure printing press in units of kilograms per year (kg/yr) (pounds per year [lb/yr]).

A = Weight of VOC per volume of solids of the coating or ink with the highest VOC content, as applied, each year on the printing press in units of kilograms VOC per liter (kg VOC/L) (pounds of VOC per gallon [lb VOC/gal]) of coating or ink solids.

B = Total volume of solids for all coatings and inks that can potentially be applied each year on the printing press in units of liters per year (L/yr) (gallons per year [gal/yr]). The instrument and/or method by which the owner or operator accurately measured or calculated the volume of coating and ink solids applied and the amount that can potentially be applied each year on the printing press shall be described in the certification to the Director.

2. Recordkeeping. -- The owner or operator shall collect and record all of the following information each year for each printing press and maintain the information at the facility for a period of 3 years.

A. The name and identification number of each coating and ink, as applied, on each printing press;

B. The weight of VOC per volume of coating solids and the volume of solids of each coating and ink, as applied, each year on each printing press; and

C. The total potential emissions as calculated in section 34.7.a.1.B. using VOC content for that year.

3. Reporting. -- Any record showing that total potential emissions of VOC from all printing presses exceed 90.7 Mg (100 tons) in any calendar year before the application of capture systems and control devices shall be reported by sending a copy of such record to the Director within 30 days after the exceedance occurs.

b. Requirements for sources using complying coatings or inks. -- Any owner or operator of a printing press subject to this section 34. and complying by means of use of complying coatings or inks, shall comply with the following:

1. Initial certification. -- By one year from May 31, 1993, or upon initial startup of a new printing press, or upon changing the method of compliance for an existing subject printing press from daily-weighted averaging or control devices to use of complying coatings or inks, the owner or operator of a subject printing press shall certify to the Director that the printing press will be in compliance with section 34.3.a. or section 34.3.b. on and after one year from May 31, 1993, or on and after the initial startup date. Such certification shall include:

A. The name and location of the facility;

B. The address and telephone number of the person responsible for the facility;

C. Identification of subject sources;

D. The name and identification number of each coating and ink, as applied; and

E. The VOC content of all coatings and inks, as applied.

2. Recordkeeping. -- By one year after May 31, 1993, or on and after the initial startup date, the owner or operator of a printing press subject to the limitations of this section 34. and complying by means of section 34.3.a.1. or section 34.3.b.1. shall collect and record all of the following information each day for each coating line and maintain the information at the facility for a period of 3 years:

A. The name and identification number of each coating and ink, as applied; and

B. The VOC content of each coating and ink, as applied,

expressed in units necessary to determine compliance.

3. Reporting.

A. Any record showing an exceedance of the VOC contents of section 34.3.a. or section 34.3.b. shall be reported by the owner or operator of the subject printing press to the Director within 30 days following the exceedance; and

B. At least 30 calendar days before changing the method of compliance with this section 34. from the use of complying coatings to daily-weighted averaging or control devices, the owner or operator shall comply with all requirements of section 34.7.c.1. or section 34.7.d.1., respectively. Upon changing the method of compliance with this section 34. from the use of complying coatings to daily-weighted averaging or control devices, the owner or operator shall comply with all requirements of section 34.7.c. or section 34.7.d., respectively.

c. Requirements for sources using daily-weighted averaging. -- Any owner or operator of a printing press subject to the limitations of this section 34. and complying by means of daily-weighted averaging shall comply with the following:

1. Initial certification. -- By one year after May 31, 1993, or upon initial startup of a new printing press, or upon changing the method of compliance for an existing subject press from use of complying coating or control devices to daily-weighted averaging, the owner or operator of the subject printing press shall certify to the Director that the printing press will be in compliance with section 34.4. on and after one year after May 31, 1993, or on and after the initial startup date. Such certification shall include:

A. The name and location of the facility;

B. The address and telephone number of the person responsible for the facility;

C. The name and identification of each printing press which will comply by means of section 34.4.;

D. The name and identification number of each coating and ink available for use on each printing press;

E. The VOC content of each coating and ink, as applied, each day on each printing press, expressed in units necessary to determine compliance;

F. The instrument or method by which the owner or operator will accurately measure or calculate the volume of each coating and ink, as applied, each day on each printing press;

G. The method by which the owner or operator will create and maintain records each day as required in section 34.7.c.2.; and

H. An example of the format in which the records required in section 34.7.c.2. will be kept.

2. Recordkeeping. -- On and after one year after May 31, 1993, or on and after the initial startup date, the owner or operator of a printing press subject to the limitations of this section 34. and complying by means of daily-weighted averaging shall collect and record all of the following information each day for each printing press and maintain the information at the facility for a period of 3 years:

A. The name and identification number of each coating and ink, as applied, on each printing press;

B. The VOC content and the volume of each coating and ink, as applied, each day on each printing press, expressed in units necessary to determine compliance; and

C. The daily-weighted average VOC content of all coatings and inks, as applied, on each printing press.

3. Reporting. -- On and after one year after May 31, 1993, the owner or operator of a subject printing press shall notify the Director in the following instances:

A. Except as provided in section 9.3., any record showing non-compliance with section 34.4. shall be reported by sending a copy of such record to the Director within 30 days following the occurrence; and

B. At least 30 calendar days before changing the method of compliance with this section 34. from daily-weighted averaging to use of complying coatings or control devices, the owner or operator shall comply with all requirements of section 34.7.b.1. or section 34.7.d.1., respectively. Upon changing the method of compliance with this section 34. from daily-weighted averaging to use of complying coatings or control devices, the owner or operator shall comply with all requirements of section 34.7.b. or section 34.7.c., respectively.

d. Requirements for sources using control devices. -- Any owner or operator of a printing press subject to this section 34. and complying by means of control devices shall comply with section 4.5. and the following:

1. Initial certification. -- By one year from May 31, 1993, or upon initial startup of a new printing press, or upon changing the method of compliance for an existing printing press from use of complying coatings or daily-weighted averaging to control devices, the owner or operator of the subject printing press shall perform all tests and submit

to the Director the results of all tests and calculations necessary to demonstrate that the subject printing press will be in compliance with section 34.5., on and after one year from May 31, 1993, or on and after the initial startup date.

2. Recordkeeping. -- On and after one year from May 31, 1993, or on and after the initial startup date, the owner or operator of a printing press subject to the limitations of this section 34. and complying by means of control devices shall collect and record all of the following information each day for each printing press and maintain the information at the facility for a period of 3 years:

A. Control device monitoring data;

B. A log of operating time for the capture system, control device, monitoring equipment and the associated printing press; and

C. A maintenance log for the capture system, control device, and monitoring equipment detailing all routine and non-routine maintenance performed including dates and duration of any outages.

3. Reporting. -- On and after one year from May 31, 1993, the owner or operator of a subject printing press shall notify the Director in the following instances:

A. Except as provided in section 9.3., any record showing non-compliance with section 34.5. shall be reported by sending a copy of such record to the Director within 30 days following the occurrence; and

B. At least 30 calendar days before changing the method of compliance with this section 34. from control devices to use of complying coatings or daily-weighted averaging, the owner or operator shall comply with all requirements of section 34.7.b.1. or section 34.7.c.1., respectively. Upon changing the method of compliance with this section 34. from control devices to use of complying coatings or daily-weighted averaging, the owner or operator shall comply with all requirements of section 34.7.b. or section 34.7.c., respectively.

45-21-35. Petroleum Solvent Dry Cleaners.

35.1. Applicability.

a. This section 35. applies to petroleum solvent dry cleaning facilities.

b. Any petroleum solvent dry cleaning facility that consumes less than 123,000 liters (L) (32,500 gallons [gal]) of petroleum solvent per year is subject only to the requirements of section 35.5.a.

c. This section does not apply to facilities that use only perchloroethylene.

35.2. Definitions. -- As used in this section 35., all terms not defined herein shall have the meaning given them in section 2.

a. "Filter cartridge" means a replaceable filter unit containing filtration paper and carbon or carbon only.

b. "Perceptible leaks" means any petroleum solvent vapor or liquid leaks that are conspicuous from visual observation or that bubble after application of a soap solution, such as pools or droplets of liquid, open containers of solvent, or solvent-laden waste standing open to the atmosphere.

c. "Petroleum solvent cartridge filtration system" means a process in which soil-laden solvent is pumped under pressure from a washer through a sealed vessel containing filter cartridges that remove entrained solids and impurities from the solvent.

d. "Petroleum solvent dry cleaning facility" means a facility engaged in the cleaning of fabrics, clothing, and other articles in a petroleum solvent by means of one or more washes in the solvent, extraction of excess solvent by spinning, and drying by tumbling in an airstream. Equipment at the facility includes, but is not limited to, any petroleum solvent washer, dryer, solvent filter system, settling tank, vacuum still, and any other container or conveyor of petroleum solvent.

e. "Settling tank" means a container, and any associated piping and ductwork, that gravimetrically separates oils, grease, and dirt from petroleum solvent.

f. "Solvent filter" means a discrete solvent filter unit containing a porous medium that traps and removes contaminants from petroleum solvent, together with the piping and ductwork used in the installation of this device.

g. "Solvent recovery dryer" means a class of dry cleaning dryers that employs a condenser to condense and recover solvent vapors evaporated in a closed-loop stream of heated air, together with the piping and ductwork used in the installation of this device.

h. "Standard dryer" means a device that dries dry-cleaned articles by

tumbling in a heated airstream.

i. "Still" means a device used to volatilize, separate, and recover petroleum solvent from contaminated solvent, together with the piping and ductwork used in the installation of this device.

j. "Washer" means a machine which agitates fabric articles in a petroleum solvent bath and spins the articles to remove the solvent, together with the piping and ductwork used in the installation of this device.

35.3. Standards.

a. Fugitive emissions. -- The owner or operator of a petroleum solvent dry cleaning facility subject to this section 35. shall ensure that:

1. There are no perceptible leaks from any portion of the equipment; and

2. All washer lint traps, button traps, access doors, and other parts of the equipment where solvent may be exposed to the atmosphere are kept closed at all times except when opening is required for proper operation or maintenance.

b. Leak repair. -- The owner or operator of a petroleum solvent dry cleaning facility subject to this section 35. shall repair any perceptible leaks in any portion of the dry cleaning equipment within 3 working days after the leak is detected. If necessary repair parts are not on hand, the owner or operator shall order these parts within 3 working days and repair the leaks no later than 3 working days after the parts arrive.

c. Dryers. -- The owner or operator of a petroleum solvent dry cleaning facility subject to this section 35. shall:

1. Limit the volatile organic compound (VOC) emissions from each standard dryer to 1.6 kilograms (kg) (3.5 pounds [lb]) VOC per 45 kg (100 lb) dry weight of articles dry cleaned; or

2. Install, maintain, and operate a solvent-recovery dryer such that the dryer remains closed and the recovery phase continues until a final recovered solvent flow rate of no greater than 50 milliliters per minute (ml/min) (0.013 gallons per minute [gal/min]) is attained.

d. Filtration systems. -- The owner or operator of a petroleum solvent filtration system subject to this section 35. shall:

1. Reduce the VOC content in filtration waste to 1 kg (2.2 lb) VOC per 100 kg (220 lb) dry weight of articles dry cleaned; or

2. Install, maintain, and operate a cartridge filtration system according to the manufacturer's instructions, and drain all filter cartridges in their sealed housings for 8 hours or more before their removal.

35.4. Test methods and procedures.

a. To be in compliance with section 35.3.c.1., each owner or operator of a petroleum solvent dry cleaning facility subject to this section 35. shall:

1. Calculate the weight of VOCs vented from the dryer emission control device calculated by using Methods 1, 2, and 25A of 40 CFR Part 60, Appendix A with the following specifications:

A. Field calibration of the flame ionization analyzer with propane standards;

B. Laboratory determination of the ratio of the flame ionization analyzer response to a given parts per million (ppm) by volume concentration of propane to the response to the same ppm concentration of the VOCs to be measured; and

C. Determination of the weight of VOCs vented to the atmosphere by:

i. Multiplying the ratio determined in section 35.4.a.1.B. by the measured concentration of VOC gas (as propane) as indicated by the flame ionization analyzer response output record;

ii. Converting the ppm by volume value calculated in section 35.4.a.1.C.i. into a mass concentration value for the VOCs present; and

iii. Multiplying the mass concentration value calculated in section 35.4.a.1.C.ii. by the exhaust flow rate determined by using Methods 1 and 2 of 40 CFR Part 60, Appendix A;

2. Calculate the dry weight of articles dry cleaned; and

3. Repeat sections 35.4.a.1. and 35.4.a.2. for normal operating conditions that encompass at least 30 dryer loads, which total not less than 1,800 kg (4,000 lb) dry weight and represent a normal range of variations in fabrics, solvents, load weights, temperatures, flow rates, and process deviations.

b. To determine initial compliance with section 35.3.c.2., the owner or operator of a petroleum solvent dry cleaning facility subject to this section 35. shall:

1. Verify that the flow rate of recovered solvent from the solvent-

recovery dryer at the termination of the recovery phase is no greater than 50 ml/min (0.013 gal/min) by using the following procedure:

A. Determine the appropriate location for measuring the flow rate of recovered solvent; the suggested point is at the outlet of the solvent-water separator;

B. Near the end of the recovery cycle, divert the flow of recovered solvent to a graduated cylinder;

C. Continue the cycle until a flow rate of 50 ml/min (0.013 gal/min) is reached; and

D. Record the type of articles dry cleaned and the length of the cycle.

2. To determine initial compliance with section 35.3.c.2., conduct the procedure in section 35.4.b.1. for at least 50 percent of the dryer loads over a period of no less than 2 consecutive weeks.

c. To be in compliance with section 35.3.d., the owner or operator of a petroleum solvent dry cleaning facility subject to this section 35. shall:

1. Calculate the weight of volatile organic compounds contained in each of at least five 1 kg (2.2 lb) samples of filtration waste material taken at intervals of at least 1 week, by employing ASTM D322-80 (Standard Test Method for Gasoline Diluent in Used Gasoline Engine Oils by Distillation);

2. Calculate the total dry weight of articles dry cleaned during the intervals between removal of filtration waste samples, as well as the total mass of filtration waste produced in the same period; and

3. Calculate the weight of VOCs contained in filtration waste material per 100 kg (220 lb) dry weight of articles dry cleaned.

d. Compliance with section 35.3. requires that each owner or operator of a petroleum solvent dry cleaning facility subject to this section 35. make weekly inspections of washers, dryers, solvent filters, settling tanks, vacuum stills, and all containers and conveyors of petroleum solvent to identify perceptible VOC vapor or liquid leaks.

35.5. Recordkeeping requirements.

a. The owner or operator of a petroleum solvent dry cleaning facility claiming exemption from this section 35. shall maintain records of annual solvent consumption in a readily accessible location for at least 3 years to document whether the applicability threshold in section 35.1.b. has been exceeded.

b. The owner or operator of a petroleum solvent dry cleaning facility subject to this section 35. shall maintain the following records in a readily accessible location for at least 3 years:

1. Records of the weight of VOCs vented from the dryer emission control device calculated according to section 35.4.a.1.;

2. Records of the dry weight of articles dry cleaned for use in the calculations required in sections 35.4.a., 35.4.b., and 35.4.c.;

3. Records of the weight of VOCs contained in the filtration waste samples required by section 35.4.c.1.; and

4. Records of the weight of VOCs in filtration waste material per 100 kg (220 lb) dry weight of articles dry cleaned.

35.6. Reporting requirements. -- The owner or operator of any facility containing sources subject to this section 35. shall:

a. Comply with the initial compliance certification requirements of section 5.1.; and

b. Comply with the requirements of section 5.2. for excess emissions related to the control devices required to comply with sections 35.3.b., 35.3.c.2., and 35.3.d.2.

§45-21-36. [RESERVED]

§45-21-37. Leaks from Synthetic Organic Chemical, Polymer, and Resin Manufacturing Equipment.

37.1. Applicability.

a. This section 37. applies to all equipment in volatile organic compound (VOC) service in any process unit at a synthetic organic chemical, polymer, and resin manufacturing facility.

1. A piece of equipment is not in VOC service if the VOC content of the process fluid can never be reasonably expected to exceed 10 percent by weight. For purposes of this demonstration, the following methods and procedures shall be used:

A. Procedures that conform to the general methods in ASTM E260, E168, and E169 shall be used to determine the percent VOC content in the process fluid that is contained in or contacts a piece of equipment;

B. Organic compounds that are considered by the U.S. EPA to have negligible photochemical reactivity may be excluded from the total quantity of organic compounds in determining the VOC content of the process fluid; and

C. Engineering judgment may be used to estimate the VOC content, if a piece of equipment had not been shown previously to be in VOC service. If the Director disagrees with the judgment, sections 37.1.a.1.A. and 37.1.a.1.B. shall be used to resolve the disagreement.

b. This section 37. does not apply to any synthetic organic chemical, polymer, or resin manufacturing process unit whose annual design production capacity is less than 1,000 megagrams (Mg) (1,100 tons) of product.

c. To the extent that implementation of the requirements of 40 CFR Part 60, 40 CFR Part 61, or 40 CFR Part 63 results in monitoring and repair, consistent with this section, of all components in VOC service in any synthetic organic chemical, polymer, or resin manufacturing process unit, compliance with these federally enforceable standards will satisfy the requirements of this section.

d. The requirements of section 37.4. do not apply to:

1. Any equipment in vacuum service;

2. Any pressure-relief valve that is connected to an operating flare header or vapor recovery device;

3. Any liquid pump that has a dual mechanical pump seal with a barrier fluid system;

4. Any compressor with a degassing vent that is routed to an operating VOC control device; or

5. Pumps and valves in heavy liquid service except that if evidence of a leak is found by visual, audible, olfactory, or other detection method, the owner or operator must confirm the presence of a leak using methods specified in section 46. If a leak is confirmed, the owner or operator must repair the leak as specified in section 37.7.

37.2. Definitions. -- As used in this section 37., all terms not defined herein shall have the meaning given them in section 2.

a. "[In] gas/vapor service" means that the piece of equipment in VOC service contains process fluid that is in the gaseous state at operating conditions.

b. "[In] heavy liquid service" means that the piece of equipment in VOC service is not in gas/vapor service or in light liquid service.

c. "[In] light liquid service" means that the piece of equipment in VOC service contains a liquid that meets the following conditions: (1) the vapor pressure of one or more of the components is greater than 0.3 kPa (0.09 in Hg) at 20°C (68°F) (standard reference texts or ASTM D2879 shall be used to determine the vapor pressures); (2) the total concentration of the pure components having a vapor pressure greater than 0.3 kPa (0.09 in Hg) at 20°C (68°F) is equal to or greater than 20 percent by weight; and (3) the fluid is a liquid at operating conditions.

d. "Process unit" means components assembled to produce, as intermediate or final products, one or more of the chemicals listed in 40 CFR 60.489. A process unit can operate independently if supplied with sufficient feed or raw materials and sufficient storage facilities for product.

e. "[In] vacuum service" means that the equipment in VOC service is operating at an internal pressure which is at least 5 kPa below ambient pressure.

f. "[In] VOC service" means that the piece of equipment contains or contacts a process fluid that is at least 10 percent VOC by weight. The provisions of section 37.1.a.1. specify how to determine that a piece of equipment is not in VOC service.

37.3. Standards: General. -- The owner or operator of a synthetic organic chemical, polymer, or resin manufacturing facility subject to this section 37. shall ensure that:

a. Any open-ended line or valve is sealed with a second valve, blind flange, cap, or plug except during operations requiring process fluid flow through the open-ended line or valve;

b. When a second valve is used, each open-ended line or valve equipped

with a second valve is operated in such a manner that the valve on the process fluid end is closed before the second valve is closed; and

c. When a double block-and-bleed system is used, the bleed valve or line is open only during operations that require venting of the line between the block valves and is closed at all other times.

37.4. Standards: Equipment inspection program. -- The owner or operator of a synthetic organic chemical, polymer, or resin manufacturing facility shall conduct the equipment inspection program described in sections 37.4.a. through 37.4.c. using the test methods specified in section 46.

a. The owner or operator of a synthetic organic chemical, polymer, or resin manufacturing facility shall conduct quarterly monitoring of each:

1. Compressor;

2. Pump in light liquid service;

3. Valve in light liquid service, except as provided in sections 37.5. and 37.6.;

4. Valve in gas/vapor service, except as provided in sections 37.5. and 37.6.; and

5. Pressure relief valve in gas/vapor service, except as provided in sections 37.5. and 37.6.

b. The owner or operator of a synthetic organic chemical or resin manufacturing facility shall conduct a weekly visual inspection of each pump in light liquid service.

c. The owner or operator of a synthetic organic chemical, polymer, or resin manufacturing facility shall monitor each pressure relief valve after each overpressure relief to ensure that the valve has properly reseated and is not leaking.

d. It shall be determined that a leak has been detected when:

1. When an instrument reading of 10,000 parts per million (ppm) or greater is measured; or

2. If there are indications of liquid dripping from the equipment.

e. When a leak is detected, the owner or operator shall affix a weatherproof, readily visible tag in a bright color such as red or yellow, bearing the

equipment identification number and the date on which the leak was detected. This tag shall remain in place until the leaking equipment is repaired. An alternative leak identifier system may be used if the owner or operator demonstrates to the Director that the alternative system is equally as effective. The requirements of this section 37.4.e. apply to any leak detected by the equipment inspection program and to any leak from any equipment that is detected on the basis of sight, sound, or smell.

37.5. Standards: Alternative standards for valves--skip period leak detection and repair.

a. An owner or operator shall comply initially with the requirements for valves in gas/vapor service and valves in light liquid service as described in section 37.3.

b. If the percent of valves leaking is equal or less than 2.0 for two consecutive quarters, an owner or operator may skip alternate quarterly leak detection periods for the valves in gas/vapor and light liquid service.

c. If the percent of valves leaking is equal to or less than 2.0 for five consecutive quarters, an owner or operator may skip three of the quarterly leak detection periods per year for the valves in gas/vapor and light liquid service, provided that each valve shall be monitored once each year.

d. If at any time the percent of valves leaking is greater than 2.0, the owner or operator shall resume compliance with the requirements in section 37.4. but may again elect to comply with the alternative standards in section 37.5.

e. The percent of valves leaking shall be determined by dividing the sum of valves found leaking during current monitoring and previously leaking valves for which repair has been delayed by the total number of valves subject to the requirements of this section 37.

f. An owner or operator shall keep a record of the percent of valves found leaking during each leak detection period.

37.6. Standards: Alternative standards for unsafe-to-monitor valves and difficult-to-monitor valves.

a. Any valve is exempt from the requirements of section 37.4. as an unsafe-to-monitor valve if:

1. The owner or operator of the valve demonstrates that the valve is unsafe to monitor because monitoring personnel would be exposed to an immediate danger as a consequence of complying with section 37.4.; and

2. The owner or operator of the valve adheres to a written plan that

requires monitoring of the valve as frequently as practicable during safe-to-monitor times.

b. Any valve is exempt from the requirements of section 37.4. as a difficult-to-monitor valve if:

1. The owner or operator of the valve demonstrates that the valve cannot be monitored without elevating the monitoring personnel more than 2 meters (m) (6.6 feet [ft]) above a support surface; and

2. The owner or operator of the valve follows a written plan that requires monitoring of the valve at least once per calendar year.

c. The alternative standards of section 37.5. are not available to valves subject to the requirements of section 37.6.

37.7. Standards: Equipment repair program. -- The owner or operator of a synthetic organic chemical, polymer, or resin manufacturing facility refinery shall:

a. Make a first attempt at repair for any leak not later than 5 calendar days after the leak is detected; and

b. Repair any leak as soon as practicable, but not later than 15 calendar days after it is detected except as provided in section 37.8.

37.8. Standards: Delay of repair.

a. Delay of repair of equipment for which a leak has been detected will be allowed if repair is technically infeasible without a process unit shutdown. Repair of such equipment shall occur before the end of the first process unit shutdown after detection of the leak.

b. Delay of repair of equipment will also be allowed for equipment that is isolated from the process and that does not remain in VOC service after detection of the leak.

c. Delay of repair beyond a process unit shutdown will be allowed for a valve, if valve assembly replacement is necessary during the process unit shutdown, and if valve assembly supplies have been depleted, where valve assembly supplies had been sufficiently stocked before the supplies were depleted. Delay of repair beyond the first process unit shutdown will not be allowed unless the next process unit shutdown occurs sooner than 6 months after the first process unit shutdown.

37.9. Test methods and procedures.

a. In conducting the monitoring required to comply with section 37.4., the owner or operator shall use the test methods specified in section 46.

b. The owner or operator shall demonstrate that a piece of equipment is in light liquid service by showing that all of the following conditions apply:

1. The vapor pressure of one or more of the components is greater than 0.3 kiloPascal (kPa) (0.09 inches of Mercury [in Hg]) at 20°C (68°F). Standard reference texts or ASTM D2879 shall be used to determine the vapor pressures;

2. The total concentration of the pure components having a vapor pressure greater than 0.3 kPa (0.09 in Hg) at 20°C (68°F) is equal to or greater than 20 percent by weight; and

3. The fluid is a liquid at operating conditions;

c. Samples used in conjunction with section 37.9.b. shall be representative of the process fluid that is contained in or contacts the equipment.

37.10. Recordkeeping requirements.

a. Each owner or operator subject to the provisions of this section 37. shall comply with the recordkeeping requirements of this section 37.

b. An owner or operator of more than one facility subject to the provisions of this section 37. may comply with the recordkeeping requirements for these facilities in one recordkeeping system if the system identifies each record by each facility.

c. When each leak is detected as specified in section 37.4., the following information shall be recorded in a log and shall be kept for 3 years in a readily accessible location:

1. The instrument and operator identification numbers and the equipment identification number;

2. The date the leak was detected and the dates of each attempt to repair the leak;

3. The repair methods employed in each attempt to repair the leak;

4. The notation "Above 10,000" if the maximum instrument reading measured by the methods specified in section 46. after each repair attempt is equal to or greater than 10,000 ppm;

5. The notation "Repair Delayed" and the reason for the delay if a leak is not repaired within 15 calendar days after discovery of the leak;

6. The signature of the owner or operator (or designate) whose

decision it was that repair could not be effected without a process unit shutdown;

7. The expected date of successful repair of the leak if a leak is not repaired within 15 days;

8. The dates of process unit shutdowns that occur while the equipment is unrepaired; and

9. The date of successful repair of the leak.

d. A list of identification numbers of equipment in vacuum service shall be recorded in a log that is kept in a readily accessible location.

e. The following information for valves complying with section 37.5. shall be recorded in a log that is kept for 3 years in a readily accessible location:

1. A schedule of monitoring; and

2. The percent of valves found leaking during each monitoring period.

f. The following information pertaining to all valves subject to the requirements of section 37.6. shall be recorded in a log that is kept for 3 years in a readily accessible location:

1. A list of identification numbers for valves that are designated as unsafe to monitor, an explanation for each valve stating why the valve is unsafe to monitor, and the plan for monitoring each valve; and

2. A list of identification numbers for valves that are designated as difficult to monitor, an explanation for each valve stating why the valve is difficult to monitor, and the schedule for monitoring each valve.

g. The following information shall be recorded in a log that is kept for 3 years in a readily accessible location for use in determining exemptions as provided in section 37.1.:

1. An analysis demonstrating the design capacity of the affected facility; and

2. Information and data used to demonstrate that a piece of equipment is not in VOC service.

37.11. Reporting. -- The owner or operator of any facility containing sources subject to this section 37. shall comply with the requirements in sections 5.1. and 5.2.

§45-21-38. Manufacture of High-Density Polyethylene, Polypropylene, and Polystyrene Resins.

38.1. Applicability.

a. This section 38. applies to the following process sections at facilities engaged in the manufacture of high-density polyethylene, polypropylene, and polystyrene:

1. For the manufacture of high-density polyethylene using a liquid-phase slurry process: each material recovery section and each product finishing section;

2. For the manufacture of polypropylene using a liquid-phase process: each polymerization reaction section, each material recovery section, and each product finishing section; and

3. For the manufacture of polystyrene using a continuous process: each material recovery section.

b. Facilities having all process sections with uncontrolled emission rates at or below those identified in sections 38.1.b.1. through 38.1.b.6. are exempt from the requirements of this section 38. except that owners or operators seeking to comply with this section 38. by complying with the uncontrolled emission rates in sections 38.1.b.1. through 38.1.b.6. are still required to comply with the initial certification requirements of section 5.1.

	Production Process	Process Section	Uncontrolled Emission Rate,megagram of product per year (Mg/yr)
1.	High density polyethylene, liquid-phase slurry process.	material recovery section	7
2.	High density polyethylene, liquid-phase slurry process	product finishing section	19
3.	Polypropylene, liquid-phase process	polymerization reaction section	7
4.	Polypropylene, liquid-phase process	material recovery section	8
5.	Polypropylene, liquid-phase process	product finishing section	36
6.	Polystyrene, continuous process	material recovery section	7

38.2. Definitions. -- As used in this section 38., all terms not defined herein shall have the meaning given them in section 2.

a. "Continuous process" means a polymerization process in which reactants are introduced in a continuous manner and products are removed either continuously or intermittently at regular intervals so that the process can be operated and

polymers produced essentially continuously.

b. "Flame zone" means that portion of the combustion chamber in a boiler occupied by the flame envelope.

c. "High-density polyethylene" means a linear, thermoplastic polymer comprised of at least 50 percent ethylene by weight and having a density greater than 0.94 grams per cubic centimeter (g/cm^3) (59 pounds per cubic foot [lb/ft^3]).

d. "Liquid-phase process" means a polymerization process in which the polymerization reaction is carried out in the liquid phase; i.e., the monomer(s) and any catalyst are dissolved or suspended in a liquid solvent.

e. "Liquid-phase slurry process" means a liquid-phase polymerization process in which the monomer(s) are in solution (completely dissolved) in a liquid solvent, but the polymer is in the form of solid particles suspended in the liquid reaction mixture during the polymerization reaction, sometimes called a particle-form process.

f. "Polypropylene" means a polymer comprised of at least 50 percent propylene by weight.

g. "Polystyrene" means a thermoplastic polymer comprised of at least 80 percent styrene or para-methylstyrene by weight.

h. "Process line" means a group of equipment assembled that can operate independently if supplied with sufficient raw materials to produce polypropylene, high-density polyethylene, or polystyrene. A process line consists of the equipment in the following process sections (to the extent that these process sections are present at a plant): raw materials preparation, polymerization reaction, product finishing, product storage, and material recovery.

i. "Process section" means the equipment designed to accomplish a general but well-defined task in polymer production. Process sections include raw materials preparation, polymerization reaction, material recovery, product finishing, and product storage and may be dedicated to a single process line or common to more than one process line.

j. "Product finishing section" means the equipment that treats, shapes, or modifies the polymer or resin to produce the finished end product of the particular facility. Product finishing equipment may accomplish extruding and pelletizing, cooling and drying, blending, additives introduction, curing, or annealing. Product finishing does not include polymerization or shaping such as fiber spinning, molding, or fabricating or modification such as fiber stretching and crimping.

38.3. Standards: High-density polyethylene and polypropylene.

a. The owner or operator of a high-density polyethylene or polypropylene process line containing a process section subject to this section 38. shall comply with the following:

1. Reduce emissions of total volatile organic compounds (VOCs) by 98 weight percent, determined according to the procedure specified in section 38.5.a., or to a VOC concentration of 20 parts per million volumetric (ppmv), as determined by the procedure specified in section 38.5.b., on a dry basis, whichever is less stringent. Total VOC is expressed as the sum of the actual compounds, not carbon equivalents. If an owner or operator elects to comply with the 20 ppmv concentration standard, the concentration shall include a correction to 3 percent oxygen only when supplemental combustion air is used to combust the vent stream. The procedure in section 38.5.c. shall be used to correct the concentration to 3 percent oxygen;

2. Combust the emissions in a boiler or process heater with a design heat input capacity of 150 million British thermal units per hour (Btu/hr) or greater by introducing the vent stream into the flame zone of the boiler or process heater; or

3. Combust the emissions in a flare as follows:

A. Flares shall be designed for and operated with no visible emissions as determined by the method specified in section 38.5.d.1., except for periods not to exceed a total of 5 minutes during any 2 consecutive hours;

B. Flares shall be operated with a flame present at all times, as determined by the method specified in section 38.5.d.2.;

C. Flares used to comply with provisions of this section 38. shall be steam-assisted, air-assisted, or non-assisted;

D. Flares shall be used only with the net heating value of the gas being combusted being 11.2 megaJoules per standard cubic meter (MJ/scm) (300 Btu per standard cubic foot [Btu/scf]) or greater if the flare is steam-assisted or air-assisted; or with the net heating value of the gas being combusted being 7.45 MJ/scm (200 Btu/scf) or greater if the flare is non-assisted. The net heating value of the gas being combusted shall be determined by the method specified in section 38.5.e.7.

E. Steam-assisted and non-assisted flares shall be designed for and operated with an exit velocity, as determined by the method specified in section 38.5.e.4., less than 18.3 meters per second (m/s) (60 feet per second [ft/s]), except as provided in sections 38.3.a.3.F. and 38.3.a.3.G.;

F. Steam-assisted and non-assisted flares designed for and operated with an exit velocity, as determined by the methods specified in section 38.5.e.4. equal to or greater than 18.3 m/s (60 ft/s) but less than 122 m/s (400 ft/s) are allowed if the

net heating value of the gas being combusted is greater than 37.3 MJ/scm (1,000 Btu/scf); and

G. Steam-assisted and non-assisted flares designed for and operated with an exit velocity, as determined by the methods specified in section 38.5.e.4., less than the velocity, V_{max} as determined by the method specified in section 38.5.e.5. and less than 122 m/s (400 ft/s) are allowed; and

H. Air-assisted flares shall be designed and operated with an exit velocity less than the Velocity, V_{max}, as determined by the method specified in section 38.5.e.6.

38.4. Standards: Polystyrene. -- The owner or operator of a polystyrene process line containing process sections subject to this section 38. shall comply with the following:

a. Not allow continuous VOC emissions from the material recovery section to be greater than 0.12 kg (kilograms) VOC per 1,000 kg of product (0.12 pounds [lb] VOC per 1,000 lb of product); or

b. Not allow the outlet gas stream from each final condenser in the material recovery section to exceed -25°C (-13°F).

38.5. Test methods and procedures.

a. The owner or operator shall determine compliance with the percent emission reduction standard in section 38.3.a.1. as follows:

1. The emission reduction of total VOC shall be determined using the following equation:

$$P = \frac{E_{inlet} - E_{outlet}}{E_{inlet}} \times 100$$

where:

P = Percent emission reduction, by weight.
E_{inlet} = Mass rate of total VOC entering the control device, kg VOC/hr.
E_{outlet} = Mass rate of total VOC discharged to the atmosphere, kg VOC/hr

2. The mass rates of total VOC (E_i, E_o) shall be computed using the following equations:

$$E_i = K_1 \left(\sum_{j=1}^{n} C_{ij} M_{ij} \right) Q_i$$

$$E_o = K_1 \left(\sum_{j=1}^{n} C_{oj} M_{oj} \right) Q_o$$

where:

C_{ij}, C_{oj} = Concentration of sample component "j" of the gas stream at the inlet and outlet of the control device, respectively, dry basis, ppmv.

M_{ij}, M_{oj} = Molecular weight of sample component "j" of the gas stream at the inlet and outlet of the control device respectively, g/gmole (lb/lb-mole).

Q_i, Q_o = Flow rate of the gas stream at the inlet and outlet of the control device, respectively, dscm/hr (dscf/hr).

K_1 = 4.157×10^{-8} [(kg)/(g-mole)]/[(g)(ppm)(dscm)] {5.711×10^{-15} [(lb)(/(lb-mole)]/[(lb)(ppm)(dscf)]}.

3. Method 18 of 40 CFR Part 60, Appendix A shall be used to determine the concentration of each individual organic component (C_{ij}, C_{oj}) in the gas stream. Method 1 or 1A of 40 CFR Part 60, Appendix A, as appropriate, shall be used to determine the inlet and outlet sampling sites. The inlet site shall be before the inlet of the control device and after all product recovery units.

4. Method 2, 2A, 2C, or 2D of 40 CFR Part 60, Appendix A, as appropriate, shall be used to determine the volumetric flow rates (Q_i, Q_o). If necessary, Method 4 of 40 CFR Part 60, Appendix A shall be used to determine the moisture content. Both determinations shall be compatible with the Method 18 determinations.

5. Inlet and outlet samples shall be taken simultaneously. The sampling time for each run shall be 1 hour in which either an integrated sample or four grab samples shall be taken. If grab sampling is used, then the samples shall be taken at 15 minute intervals.

b. The owner or operator shall determine compliance with the emission concentration standard in section 38.3.a.1. as follows:

1. The total VOC concentration is the sum of the individual components and shall be computed for each run using the following equation:

$$C_{VOC} = \sum_{j=1}^{n} C_j$$

where:

C_{VOC} = Concentration of total VOC, dry basis, ppmv;
C_j = Concentration of sample component j, ppm; and
n = Number of components in the sample.

2. Method 18 of 40 CFR Part 60, Appendix A shall be used to determine the concentration of each individual organic component (C_j) in the gas stream. Method 1 or 1A of 40 CFR Part 60, Appendix A, as appropriate, shall be used to determine the sampling site at the outlet of the control device. Method 4 of 40 CFR Part 60, Appendix A shall be used to determine the moisture content, if necessary.

3. The sampling time for each run shall be 1 hour in which either an integrated sample or four grab samples shall be taken. If grab sampling is used, then the samples shall be taken at 15 minute intervals.

c. Supplemental combustion.

1. If supplemental combustion air is used, the total VOC concentration shall be corrected to 3 percent oxygen and shall be computed using the following equation:

$$C_{CORR} = C_{MEAS}\left(\frac{17.9}{20.9 - \%O_{2d}}\right)$$

where:

C_{CORR} = Concentration of total VOC corrected to 3 percent oxygen, dry basis, ppmv;
C_{MEAS} = Concentration of total VOC, dry basis, ppmv, as calculated in section 38.5.b.1. above; and
$\%O_{2d}$ = Concentration of O_2, dry basis, percent by volume.

2. The emission rate correction factor, integrated sampling and analysis procedure of Method 3 of 40 CFR Part 60, Appendix A shall be used to determine the oxygen concentration ($\%O_{2d}$). The sampling site shall be the same as that of the total VOC sample and the samples shall be taken during the same time that the total VOC samples are taken.

d. When a flare is used to comply with section 38.3.a.3.:

1. Method 22 of 40 CFR Part 60, Appendix A shall be used to determine the compliance of flares with the visible emission requirement in section 38.3.a.3.A. The observation period is 2 hours and shall be used according to Method 22; and

2. The presence of a flare pilot flame shall be monitored using a

thermocouple or other equivalent monitoring device to detect the presence of a flame.

e. The test methods in 40 CFR Part 60, Appendix A, shall be used as reference methods for determining the VOC emission rate in terms of kg emission per megagram (Mg) of product, exit velocities, or net heating value of the gas combusted to determine compliance under sections 38.3. and 38.4. as follows:

1. Method 1 or 1A, as appropriate, for selection of the sampling site. The sampling site for the molar composition and vent stream flow rate determination prescribed in sections 38.5.e.2. and 38.5.e.3. shall be prior to the inlet of any combustion device and prior to any dilution of the stream with air;

2. The composition of the process vent stream shall be determined as follows:

A. Method 18 and ASTM D2504-67 (reapproved 1977) to measure the concentration of VOC and the concentration of all other compounds present except water vapor and carbon monoxide; and

B. Method 4 to measure the content of water vapor;

3. The volumetric flow rate shall be determined using Method 2, 2A, 2C, or 2D, as appropriate;

4. The actual exit velocity of a flare shall be determined by dividing the volumetric flow rate (in units of standard temperature and pressure), as determined by Method 2, 2A, 2C, or 2D as appropriate, by the unobstructed (free) cross-sectional area of the flare tip;

5. The maximum permitted velocity, V_{max}, for flares complying with section 38.3.a.3.E. shall be determined using the following equation:

$$Log_{10}\ (V_{max}) = \frac{H_T + 28.8}{31.7}$$

where:

V_{max}	=	Maximum permitted velocity, m/s;
28.8	=	Constant;
31.7	=	Constant; and
H_T	=	The net heating value as determined in section 38.5.e.7.

6. The V_{max} for air-assisted flares shall be determined by the following equation:

$$V_{max} = 8.706 + 0.7084\ (H_T)$$

where:

V_{max}	=	maximum permitted velocity, m/s;
8.706	=	constant;
0.7084	=	constant; and
H_T	=	The net heating value as determined in section 38.5.e.7.

7. The net heating value of the process vent stream being combusted in a flare shall be calculated using the following equation:

$$H_T = K \sum_{i=1}^{n} C_i H_i$$

where:

H_T = Net heating value of the sample, MJ/scm, where the net enthalpy per mole of offgas is based on combustion at 25°C and 760 millimeters of Mercury (mm Hg) (77°F and 29.92 inches of Mercury [in Hg]), but the standard temperature for determining the volume corresponding to one mole is 20°C (68°F);

K = Constant: $K = 1.740 \times 10^{-7} \frac{(1)}{ppm} \frac{(g\ mole)}{scm} \frac{(MJ)}{kcal}$

where standard temperature for $\frac{(g\ mole)}{scm}$ is 20°C

C_i = Concentration of sample components i in ppm on a wet basis, as measured for organics by Method 18 and measured for hydrogen and carbon monoxide by ASTM D1946-82; and

H_i = Net heat of combustion of sample component i, kcal/g-mole at 25°C (77°F) and 760 mm Hg (29.92 in Hg). The heats of combustion of process vent stream components may be determined using ASTM D2382-76 (reapproved 1977) if published values are not available or cannot be calculated;

8. The emission rate of VOC in the process vent stream shall be calculated using the following equation:

$$E_{VOC} = K \left(\sum_{i=1}^{n} C_i M_i \right) Q_s$$

where:

E_{VOC}= Emission rate of total organic compounds in the sample, kilogram per hour (kg/h);

K = Constant, 2.494×10^{-6} (1/ppm)(g-mole/scm)(kg/g)(min/h), where standard temperature for (g-mole/scm) is 20°C (68°F);

C_i = Concentration of sample component i, ppm;

M_i = Molecular weight of sample component i, g/g-mole; and

Q_s = Vent stream flow rate (scm/min), at a standard temperature of 20°C (68°F);

9. The rate of polymer produced, P_p (kg/h), shall be determined by dividing the weight of polymer pulled in kg from the process line during the performance test by the number of hours (h) taken to perform the performance test. The polymer pulled, in kg, shall be determined by direct measurement or, subject to prior approval by the Director and the U.S EPA, computed from materials balance by good engineering practice; and

10. The emission rate of VOC in terms of kilograms of emissions per megagram of production shall be calculated using the following equation:

$$ER_{VOC} = \frac{E_{VOC}}{P_p \times \frac{1Mg}{1,000kg}}$$

where:

ER_{VOC} = Emission rate of VOC, kg VOC/Mg product;

E_{VOC} = Emission rate of VOC in the sample, kg/h; and

P_p = The rate of polymer produced, kg/h.

38.6. Recordkeeping. -- The owner or operator of a facility subject to this section 38. shall maintain the following records in a readily accessible location for at least 3 years and shall make these records available to the Director upon verbal or written request:

a. For facilities complying with the standards listed in section 38.3.a.1., parameters listed in sections 38.5.a., 38.5.b., and, where applicable, section 38.5.e.;

b. For facilities complying with the standards listed in section 38.3.a.2., parameters listed in sections 38.5.c. and, where applicable, 38.5.e.;

c. For facilities complying with the standards listed in section 38.3.a.3., parameters listed in sections 38.5.d. and, where applicable, section 38..5.e.;

d. For facilities complying with the standards listed in section 38.4., parameters listed in section 38.5.e. where applicable; and

e. For all facilities containing sources subject to this section 38., the following records shall be kept:

1. The time, date, and duration of any excess emissions;

2. The subject source of any excess emissions;

3. The cause of any excess emissions;

4. The estimated rate of emissions (expressed in the units of the applicable emission limitation) and the operating data and calculations used in determining the magnitude of any excess emissions; and

5. Any corrective actions and schedules utilized to correct the conditions causing any excess emissions.

38.7. Reporting requirements. -- The owner or operator of any facility containing sources subject to this section 38. shall:

a. Comply with the initial compliance certification requirements of section 5.1.; and

b. Comply with the requirements of section 5.2. for excess emissions related to the control devices required to comply with section 38.3.a.2., section 38.3.a.3., or section 38.4.a.

§45-21-39. Air Oxidation Processes in the Synthetic Organic Chemical Manufacturing Industry.

39.1. Applicability.

a. This section 39. applies to the following air oxidation facilities in the synthetic organic chemical manufacturing industry:

1. Each air oxidation reactor not discharging its vent stream into a recovery system;

2. Each combination of an air oxidation reactor and the recovery system into which its vent stream is discharged; and

3. Each combination of two or more air oxidation reactors and the common recovery system into which their vent streams are discharged.

b. Any air oxidation reactor vent stream that has a total resource effectiveness (TRE) index value greater than 1.0 is exempt from all provisions of this section 39. except the requirements in sections 39.3., 39.5.b., and 39.6.j.

39.2. Definitions. -- As used in this section 39., all terms not defined herein shall have the meaning given them in section 2.

a. "Air oxidation facility" means a product recovery system and all associated air oxidation process reactors discharging directly into that system or any such reactors discharging directly into the atmosphere.

b. "Air oxidation process" means a reactor in which air is used as an oxidizing agent to produce an organic chemical.

c. "Air oxidation reactor" means any device or process vessel in which one or more organic reactants are combined with air or a combination of air and oxygen to produce one or more organic compounds. Ammoxidation and oxychlorination are included in this definition.

d. "Air oxidation reactor recovery train" means an individual recovery system receiving the vent stream from at least one air oxidation reactor, along with all air oxidation reactors feeding vent streams into this system.

e. "Product recovery system" means any equipment used to collect volatile organic compound (VOC) for use, reuse, or sale. Such equipment includes, but is not limited to, absorbers, adsorbers, condensers, and devices that recover non-VOCs such as ammonia and HCl.

f. "Synthetic organic chemical manufacturing industry" means the industry that produces, as intermediates or final products, one or more of the chemicals listed at 40 CFR 60.489.

g. "Total resource effectiveness index value," or "TRE index value", means a measure of the supplemental total resource requirement per unit of VOC emission reduction associated with an individual air oxidation vent stream, based on vent stream flow rate, emission rate of VOC, net heating value, and corrosive properties, as quantified by the equation given under section 39.5.a.

h. "Vent stream" means any gas stream containing nitrogen that was introduced as air to the air oxidation reactor, released to the atmosphere directly from any air oxidation reactor recovery train or indirectly, after diversion through other process equipment.

39.3. Standards. -- For each vent stream from an air oxidation reactor or combination air oxidation reactor and recovery train subject to this section 39., the owner or operator shall comply with section 39.3.a., section 39.3.b., or section 39.3.c.

a. Reduce total VOC emissions by 98 weight percent or to 20 parts per million volumetric (ppmv) on a dry basis corrected to 3 percent oxygen, whichever is less stringent. If a boiler or process heater is used to comply with this section 39.3.a., the vent stream shall be introduced into the flame zone of the boiler or process heater;

b. Combust the emissions in a flare that meets the requirements of 40 CFR 60.18; or

c. Maintain a TRE index value greater than 1.0 without the use of VOC emission control devices.

39.4. Monitoring requirements.

a. The owner or operator of an air oxidation facility that uses an incinerator to seek to comply with the VOC emission limit specified under section 39.3.a., shall install, calibrate, maintain, and operate according to manufacturer's specifications the following equipment:

1. A temperature monitoring device equipped with a continuous recorder and having an accuracy of ±1 percent of the temperature being monitored expressed in degrees Celsius or ±0.5 °C, whichever is greater.

A. Where an incinerator other than a catalytic incinerator is used, a temperature monitoring device shall be installed in the firebox.

B. Where a catalytic incinerator is used, temperature

monitoring devices shall be installed in the gas stream immediately before and after the catalyst bed.

2. A flow indicator that provides a record of vent stream flow to the incinerator at least once every hour for each air oxidation facility. The flow indicator shall be installed in the vent stream from each air oxidation facility at a point closest to the inlet of each incinerator and before being joined with any other vent stream.

b. The owner or operator of an air oxidation facility that uses a flare to seek to comply with section 39.3.b. shall install, calibrate, maintain, and operate according to manufacturer's specifications the following equipment:

1. A heat sensing device, such as an ultra-violet sensor or thermocouple, at the pilot light to indicate the continuous presence of a flame.

2. A flow indicator that provides a record of vent stream flow to the flare at least once every hour for each air oxidation facility. The flow indicator shall be installed in the vent stream from each air oxidation facility at a point closest to the flare and before being joined with any other vent stream.

c. The owner or operator of an air oxidation facility that uses a boiler or process heater to seek to comply with section 39.3.a. shall install, calibrate, maintain, and operate according to the manufacturer's specifications the following equipment:

1. A flow indicator that provides a record of vent stream flow to the boiler or process heater at least once every hour for each air oxidation facility. The flow indicator shall be installed in the vent stream from each air oxidation reactor within a facility at a point closest to the inlet of each boiler or process heater and before being joined with any other vent stream.

2. A temperature monitoring device in the firebox equipped with a continuous recorder and having an accuracy of ±1 percent of the temperature being measured expressed in degrees Celsius or ±0.5 °C, whichever is greater, for boilers or process heaters of less than 44 MW (150 million Btu/hr) heat input design capacity.

3. Monitor and record the periods of operation of the boiler or process heater if the design input capacity of the boiler or process heater is 44 MW (150 million Btu/hr) or greater. The records shall be readily available for inspection.

d. The owner or operator of an air oxidation facility that seeks to demonstrate compliance with the TRE index value limit specified under section 34.3.c. shall install, calibrate, maintain, and operate according to manufacturer's specifications the following equipment:

1. Where an absorber is the final recovery device in a recovery

system:

A. A scrubbing liquid temperature monitoring device having an accuracy of ±1 percent of the temperature being monitored, expressed in degrees Celsius or ±0.5 °C, whichever is greater, and a specific gravity monitoring device having an accuracy of ±0.02 specific gravity unit, each equipped with a continuous recorder; and

B. An organic monitoring device used to indicate the concentration level of organic compounds exiting the recovery device based on a detection principle such as infrared, photoionization, or thermal conductivity, each equipped with a continuous recorder.

2. Where a condenser is the final recovery device in a recovery system:

A. A condenser exit (product side) temperature monitoring device equipped with a continuous recorder and having an accuracy of ±1 percent of the temperature being monitored expressed in degrees Celsius or ±0.5 °C, whichever is greater; and

B. An organic monitoring device used to indicate the concentration level of organic compounds exiting the recovery device based on a detection principle such as infrared, photoionization, or thermal conductivity, each equipped with a continuous recorder.

3. Where a carbon adsorber is the final recovery device in a recovery system:

A. An integrating steam flow monitoring device having an accuracy of ±10 percent, and a carbon bed temperature monitoring device having an accuracy of ±1 percent of the temperature being monitored expressed in degrees Celsius or ±0.5 °C, whichever is greater, both equipped with a continuous recorder; and

B. An organic monitoring device used to indicate the concentration level of organic compounds exiting the recovery device based on a detection principle such as infrared, photoionization, or thermal conductivity, each equipped with a continuous recorder.

39.5. Test methods and procedures. -- The following methods shall be used as reference methods to demonstrate compliance with section 39.3.

a. The following equation shall be used to calculate the TRE index for a given vent stream:

$$TRE = \frac{1}{E} \left[a + b\,(FL)^{0.88} + c(FL) + d(FL)H_T + e(FL)^{0.88}(H_T)^{0.88} + f(FL)^{0.5} \right]$$

where:

TRE = the total resource effectiveness index value.

E = the measured hourly emissions in units of kilograms/hour (kg/h).

FL = the vent stream flow rate in scm/min, at a standard temperature of 20°C. For a Category E stream (see Table 1), the factor $f(FL)^{0.5}$ shall be replaced with

$$f \left[(FL) \quad \frac{(H_T)^{0.5}}{3.6} \right]$$

H_T = vent stream net heating value in units of MJ/scm, where the net enthalpy per mole of offgas is based on combustion at 25°C (68°F) and 760 millimeters of Mercury (mm Hg), but the standard temperature for determining the volume corresponding to one mole is 20°C, as in the definition of FL.

a, b, c, d, e, and f = specific coefficients for six different general categories of process vent streams. The set of coefficients that apply to a given air oxidation process vent stream are specified in Table 1.

TABLE 1. COEFFICIENTS OF THE TOTAL RESOURCE EFFECTIVENESS (TRE) INDEX EQUATION

A1. FOR CHLORINATED PROCESS VENT STREAMS, IF 0 ≤ NET HEATING VALUE (MJ/scm) ≤ 3.5:						
FL = vent stream flow rate (scm/min)	a	b	c	d	e	f
FL ≤ 13.5	48.73	0	0.404	-0.1632	0	0
13.5 < FL ≤ 700	42.35	0.624	0.404	-0.1632	0	0.0245
700 < FL ≤ 1,400	84.38	0.678	0.404	-0.1632	0	0.0346
1,400 < FL ≤ 2,100	126.41	0.712	0.404	-0.1632	0	0.0424
2,100 < FL ≤ 2,800	168.44	0.747	0.404	-0.1632	0	0.0490
2,800 < FL ≤ 3,500	210.47	0.758	0.404	-0.1632	0	0.0548
A2. FOR CHLORINATED PROCESS VENT STREAMS, IF 3.5 < NET HEATING VALUE (MJ/scm):						
FL = vent stream flow rate (scm/min)	a	b	c	d	e	f
FL ≤ 13.5	47.76	0	-0.292	0	0	0
13.5 < FL ≤ 700	41.58	0.605	-0.292	0	0	0.0245
700 < FL ≤ 1,400	82.84	0.658	-0.292	0	0	0.0346
1,400 < FL ≤ 2,100	123.10	0.691	-0.292	0	0	0.0424
2,100 < FL ≤ 2,800	165.36	0.715	-0.292	0	0	0.0490
2,800 < FL ≤ 3,500	206.62	0.734	-0.292	0	0	0.0548
B. FOR NONCHLORINATED PROCESS VENT STREAMS, IF 0 ≤ NET HEATING VALUE (MJ/scm) ≤ 0.48:						
FL = vent stream flow rate (scm/min)	a	b	c	d	e	f
FL ≤ 13.5	19.05	0	0.113	-0.214	0	0
13.5 < FL ≤ 1,350	16.61	0.239	0.113	-0.214	0	0.0245
1,350 < FL ≤ 2,700	32.91	0.260	0.113	-0.214	0	0.0346
2,700 < FL ≤ 3,500	49.21	0.273	0.113	-0.214	0	0.0424
C. FOR NONCHLORINATED PROCESS VENT STREAMS, IF 0.48 < NET HEARING VALUE (MJ/scm) ≤ 1.9:						
FL = vent stream flow rate (scm/min)	a	b	c	d	e	f
FL ≤ 13.5	19.74	0	0.400	-0.202	0	0
13.5 < FL ≤ 1,350	18.30	0.138	0.400	-0.202	0	0.0245
1,350 < FL ≤ 2,700	36.28	0.150	0.400	-0.202	0	0.0346
2,700 < FL ≤ 4,050	54.26	0.158	0.400	-0.202	0	0.0424
D. FOR NONCHLORINATED PROCESS VENT STREAMS, IF 1.9 < NET HEATING VALUE (MJ/scm) ≤ 3.6:						
FL = vent stream flow rate (scm/min)	a	b	c	d	e	f
FL ≤ 13.5	15.24	0	0.033	0	0	0
13.5 < FL ≤ 1,190	13.63	0.157	0.033	0	0	0.0245
1,190 < FL ≤ 2,380	26.95	0.171	0.033	0	0	0.0346
2,380 < FL ≤ 3,570	40.27	0.179	0.033	0	0	0.0424
E. FOR NONCHLORINATED PROCESS VENT STREAMS, IF 3.6 < NET HEATING VALUE (MJ/scm):						
FL = vent stream flow rate (scm/min)	a	b	c	d	e	f
FL ≤ 13.5	15.24	0	0	0.0090	0	0
13.5 < FL ≤ 1,190	13.63	0	0	0.0090	0.0503	0.0245
1,190 < FL ≤ 2,380	26.95	0	0	0.0090	0.0546	0.0346
2,380 < FL ≤ 3,570	40.27	0	0	0.0090	0.0573	0.0424

b. Each owner or operator of an air oxidation facility seeking to comply with section 39.1.b. or section 39.3.c. shall recalculate the TRE index value for that air oxidation facility whenever process changes are made. Some examples of process changes are changes in production capacity, feedstock type, or catalyst type, or whenever there is replacement, removal, or addition of recovery equipment. The TRE index value shall be recalculated based on test data, or on best engineering estimates of the effects of the change to the recovery system.

c. Method 1 or 1A of 40 CFR Part 60, Appendix A, as appropriate, for selection of the sampling sites. The control device inlet sampling site for determination of vent stream molar composition or VOC reduction efficiency shall be prior to the inlet of the control device and after the recovery system.

d. Method 2, 2A, 2C, or 2D of 40 CFR Part 60, Appendix A, as appropriate, for determination of the volumetric flow rates.

e. The emission rate correction factor, integrated sampling and analysis procedure of Method 3 of 40 CFR Part 60, Appendix A shall be used to determine the oxygen concentration ($\%O_{2d}$) for the purposes of determining compliance with the 20 ppmv limit. The sampling site shall be the same as that of the VOC samples and the samples shall be taken during the same time that the VOC samples are taken. The VOC concentration corrected to 3 percent O_2 (C_c) shall be computed using the following equation:

$$C_c = C_{VOC} \frac{17.9}{20.9 - \%O_{2_d}}$$

where:

C_c = Concentration of VOC corrected to 3 percent O_2, dry basis, ppm by volume.
C_{VOC} = Concentration of VOC, dry basis, ppm by volume.
$\%O_{2d}$ = Concentration of O_2, dry basis, percent by volume.

f. Method 18 of 40 CFR Part 60, Appendix A to determine concentration of VOC in the control device outlet and the concentration of VOC in the inlet when the reduction efficiency of the control device is to be determined.

1. The sampling time for each run shall be 1 hour in which either an integrated sample or four grab samples shall be taken. If grab sampling is used, then the samples shall be taken at 15-minute intervals.

2. The emission reduction (R) of VOC shall be determined using the following equation:

$$R = \frac{E_i - E_0}{E_i} \times 100$$

where:

R = Emission reduction, percent by weight.
E_i = Mass rate of VOC entering the control device, kg VOC/hr.
E_0 = Mass rate of VOC discharged to the atmosphere, kg VOC/hr.

3. The mass rates of VOC (E_1, E_0) shall be computed using the following equations:

$$E_i = K_2 \left(\sum_{j=1}^{n} C_{ij} M_{ij} \right) Q_i$$

$$E_o = K_2 \left(\sum_{j=1}^{n} C_{oj} M_{oj} \right) Q_0$$

where:

C_{ij}, C_{oj} = Concentration of sample component "j" of the gas stream at the inlet and outlet of the control device, respectively.
M_{ij}, M_{oj} = Molecular weight of sample component "j" of the gas stream at the inlet and outlet of the control device, respectively, g/g-mole (lb/lb-mole).
Q_i, Q_o = Flow rate of gas stream at the inlet and outlet of the control device, respectively, dscm/min (dscf/hr).
K_2 = Constant, 2.494×10^{-6} (1/ppm) (g-mole/scm) (kg/g) (min/hr), where standard temperature for (g-mole/scm) is 20°C.

4. The VOC concentration (C_{VOC}) is the sum of the individual components and shall be computed for each run using the following equation:

$$C_{VOC} = \sum_{j=1}^{n} C_j$$

where:

C_{VOC} = Concentration of VOC, dry basis, ppm by volume,
C_j = Concentration of sample components in the sample.
n = Number of components in the sample.

g. When a flare is used to seek to comply with section 39.3.b., the flare shall comply with the requirements of 40 CFR 60.18.

h. The following test methods in Appendix A to 40 CFR Part 60, except as provided under 40 CFR 60.18, shall be used for determining the net heating value of the gas combusted to determine compliance under section 39.3.b., and for determining the process vent stream TRE index value to determine compliance under section 39.3.c.

i. Method 1 or 1A, as appropriate, for selection of the sampling site. The sampling site for the vent stream flow rate and molar composition determination prescribed in sections 39.5.j. and 39.5.k. shall be, except for the situations outlined in section 39.5.i.1., prior to the inlet of any control device, prior to any post-reactor dilution of the stream with air, and prior to any post-reactor introduction of halogenated compounds into the vent stream. No transverse site selection method is needed for vents smaller than 4 inches in diameter.

1. If any gas stream other than the air oxidation vent stream is normally conducted through the final recovery device:

A. The sampling site for vent stream flow rate and molar composition shall be prior to the final recovery device and prior to the point at which the nonair oxidation stream is introduced.

B. The efficiency of the final recovery device is determined by measuring the VOC concentration using Method 18 at the inlet to the final recovery device after the introduction of any nonair oxidation vent stream and at the outlet of the final recovery device.

C. This efficiency is applied to the VOC concentration measured prior to the final recovery device and prior to the introduction of the nonair oxidation stream to determine the concentration of VOC in the air oxidation stream from the final recovery device. This concentration of VOC is then used to perform the calculations outlined in sections 39.5.l. and 39.5.m.

j. The molar composition of the process vent stream shall be determined as follows:

1. Method 18 to measure the concentration of VOC including those containing halogens.

2. ASTM D1946-77 to measure the concentration of carbon monoxide and hydrogen.

3. Method 4 to measure the content of water vapor.

k. The volumetric flow rate shall be determined using Method 2, 2A, 2C, or 2D, as appropriate.

l. The net heating value of the vent stream shall be calculated using the following equation:

$$H_T = K_1 \left(\sum_{j=1}^{n} C_j H_j \right)$$

where:

H_T = Net heating value of the sample, MJ/scm, where the net enthalpy per mole of offgas is based on combustion at 25°C and 760 mm Hg, but the standard temperature for determining the volume corresponding to one mole is 20°C, as in the definition of Q_s (offgas flow rate).

K_1 = Constant, $1.740 \times 10^{-7} \frac{(1)}{ppm} \frac{(g\text{-}mole)}{scm} \frac{(MJ)}{kcal}$

where standard temperature for $\frac{(g\text{-}mole)}{scm}$ is 20°C.

C_j = Concentration of compound j in ppm, as measured for organics by Method 18 and measured for hydrogen and carbon monoxide by ASTM D1946-77 as indicated in section 39.5.j.

H_j = Net heat of combustion of compound j, kcal/g-mole, based on combustion at 25°C and 760 mm Hg. The heats of combustion of vent stream components would be required to be determined using ASTM D2382-76 if published values are not available or cannot be calculated.

m. The emission rate of VOC in the process vent stream shall be calculated using the following equation:

$$E_{VOC} = K_2 \left[\sum_{j=1}^{n} C_j M_j \right] Q_s$$

where:

E_{VOC}= Emission rate of VOC in the sample, kg/hr

K_2 = Constant, 2.494×10^{-6} (1/ppm) (g-mole/scm) (kg/g) (min/hr), where standard temperature for (g-mole/scm) is 20°C.

C_j = Concentration on a dry basis of compound j in ppm as measured by Method 18 as indicated in section 39.5.j.

M_j = Molecular weight of sample j, g/g-mole

Q_S = Vent stream flow rate (scm/min) at a standard temperature of 20°C.

39.6. Recordkeeping. -- The owner or operator of a facility subject to this section 39. shall keep the records specified in this section 39.6. in a readily accessible location for at least 3 years. These records shall be made available to the Director upon verbal or written request.

a. Where an owner or operator subject to this section 39. seeks to demonstrate compliance with section 39.3.a. through the use of either a thermal or catalytic incinerator:

1. The average firebox temperature of the incinerator (or the average temperature upstream and downstream of the catalyst bed for a catalytic incinerator), measured at least every 15 minutes and averaged over the same time period as the compliance test; and

2. The percent reduction of VOC determined as specified in section 39.3.a. that is achieved by the incinerator, or the concentration of VOC determined as specified in section 39.3.a. at the outlet of the control device on a dry basis corrected to 3 percent oxygen.

b. Where an owner or operator subject to the provisions of this section 39. seeks to demonstrate compliance with section 39.3.a. through the use of a boiler or process heater:

1. A description of the location at which the vent stream is introduced into the boiler or process heater, and

2. The average combustion temperature of the boiler or process heater with a design heat input capacity of less than 44 MW (150 million Btu/hr) measured at least every 15 minutes and averaged over the same time period of the compliance testing.

c. Where an owner or operator subject to the provisions of this section 39. seeks to comply with section 39.3.b. through the use of a smokeless flare, flare design (i.e., steam-assisted, air-assisted, or non-assisted), all visible emission readings, heat content determinations, flow rate measurements, and exit velocity determinations made during the compliance test, continuous records of the flare pilot flame monitoring, and records of all periods of operation during which the pilot flame is absent.

d. Where an owner or operator seeks to demonstrate compliance with with section 39.3.c.:

1. Where an absorber is the final recovery device in a recovery system, the exit specific gravity and average exit temperature of the absorbing liquid, measured at least every 15 minutes and averaged over the same time period of the

compliance testing (both measured while the vent stream is normally routed and constituted); or

2. Where a condenser is the final recovery device in a recovery system, the average exit (product side) temperature, measured at least every 15 minutes and averaged over the same time period of the compliance testing while the vent stream is normally routed and constituted; or

3. Where a carbon adsorber is the final recovery device in a recovery system, the total steam mass flow measured at least every 15 minutes and averaged over the same time period of the compliance test (full carbon bed cycle), temperature of the carbon bed after regeneration (and within 15 minutes of completion of any cooling cycle(s), and duration of the carbon bed steaming cycle (all measured while the vent stream is normally routed and constituted); or

4. As an alternative to section 39.6.d.1., section 39.6.d.2., or section 39.6.d.3., the concentration level or reading indicated by the organic monitoring device at the outlet of the absorber, condenser, or carbon adsorber measured at least every 15 minutes and averaged over the same time period of the compliance testing while the vent stream is normally routed and constituted.

5. All measurements and calculations performed to determine the TRE index value of the vent stream.

e. Each owner or operator subject to the provisions of this section 39. shall keep up-to-date, readily accessible continuous records of the equipment operating parameters specified to be monitored under sections 39.4.a. and 39.4.c. as well as up-to-date, readily accessible records of periods of operation during which the parameter boundaries established during the most recent compliance test are exceeded. The Director may at any time require a report of these data. Where a combustion device is used by an owner or operator seeking to demonstrate compliance with section 39.3.a. or section 39.3.c., periods of operation during which the parameter boundaries established during the most recent performance tests are exceeded are defined as follows:

1. For thermal incinerators, all 3-hour periods of operation during which the average combustion temperature was more than 28°C (50°F) below the average combustion temperature during the most recent test at which compliance with section 39.3.a. was determined.

2. For catalytic incinerators, all 3-hour periods of operation during which the average temperature of the vent stream immediately before the catalyst bed is more than 28°C (50°F) below the average temperature of the vent stream during the most recent test at which compliance with section 39.3.a. was determined. The owner or operator also shall record all 3-hour periods of operation during which the average temperature difference across the catalyst bed is less than 80 percent of the average temperature difference of the

device during the most recent test at which compliance with section 39.3.a. was determined.

3. All 3-hour periods of operation during which the average combustion temperature was more than 28°C (50°F) below the average combustion temperature during the most recent test at which compliance with section 39.3.a. was determined for boilers or process heaters with a design heat input capacity of less than 44 MW (150 million Btu/hr).

4. For boilers or process heaters, whenever there is a change in the location at which the vent stream is introduced into the flame zone as required under section 39.3.a.

f. Each owner or operator subject to the provisions of this section 39. shall keep up-to-date, readily accessible continuous records of the flow indication specified under sections 39.4.a.2., 39.4.b.2., and 39.4.c.1., as well as up-to-date, readily accessible records of all periods when the vent stream is diverted from the control device or has no flow rate.

g. Each owner or operator subject to the provisions of this section 39. who uses a boiler or process heater with a design heat input capacity of 44 MW or greater to comply with section 39.3.a. shall keep an up-to-date, readily accessible record of all periods of operation of the boiler or process heater. (Examples of such records could include records of steam use, fuel use, or monitoring data collected pursuant to other State or Federal regulatory requirements.)

h. Each owner or operator subject to the provisions of this section 39. shall keep up-to-date, readily accessible, continuous records of the flare pilot flame monitoring specified in section 39.4.b. as well as up-to-date, readily accessible records of all periods of operations in which the pilot flame is absent.

i. Each owner or operator subject to the provisions of this section 39. shall keep up-to-date, readily accessible, continuous records of the equipment operating parameters specified to be monitored under section 39.4.c. as well as up-to-date, readily accessible records of periods of operation during which the parameter boundaries established during the most recent compliance test are exceeded. The Director may at any time require a report of these data. Where the owner or operator seeks to demonstrate compliance with section 39.3.c., periods of operation during which the parameter boundaries established during the most recent compliance tests are exceeded are defined as follows:

1. Where an absorber is the final recovery device in a recovery system, and where an organic monitoring device is not used:

A. All 3-hour periods of operation during which the average absorbing liquid temperature was more than 11°C (20°F) above the average absorbing liquid

temperature during the most recent compliance test; or

B. All 3-hour periods of operation during which the average absorbing liquid specific gravity was more than 0.1 unit above, or more than 0.1 unit below, the average absorbing liquid specific gravity during the most recent compliance test.

2. Where a condenser is the final recovery device in a recovery system, and where an organic monitoring device is not used, all 3-hour periods of operation during which the average exit (product side) condenser operating temperature was more than 6°C (11°F) above the average exit (product side) operating temperature during the most recent compliance test.

3. Where a carbon adsorber is the final recovery device in a recovery system and where an organic monitoring device is not used:

A. All carbon bed regeneration cycles during which the total mass steam flow was more than 10 percent below the total mass steam flow during the most recent compliance test; or

B. All carbon bed regeneration cycles during which the temperature of the carbon bed after regeneration [and after completion of any cooling cycle(s)] was more than 10 percent greater than the carbon bed temperature (in degrees Celsius) during the most recent compliance test.

4. Where an absorber, condenser, or carbon adsorber is the final recovery device in the recovery system and an organic monitoring device approved by the Director is used, all 3-hour periods of operation during which the average concentration level or reading of organic compounds in the exhaust gases is more than 20 percent greater than the exhaust gas organic compound concentration level or reading measured by the monitoring device during the most recent compliance test.

j. Each owner or operator subject to the provisions of this section 39. and seeking to demonstrate compliance with section 39.3.c. shall keep up-to-date, readily accessible records of:

1. Any changes in production capacity, feedstock type, or catalyst type, or of any replacement, removal, or addition of recovery equipment or air oxidation reactors;

2. Any recalculation of the TRE index value performed pursuant to section 39.5.b; and

3. The results of any test performed pursuant to the methods and procedures required by section 39.4.d.

39.7. Reporting requirements. -- The owner or operator of any facility containing sources subject to this section 39. shall:

a. Comply with the initial compliance certification requirements of section 5.1.; and

b. Comply with the requirements of section 5.2. for excess emissions related to the control devices required to comply with this section.

§45-21-40. Other Facilities that Emit Volatile Organic Compound (VOC).

40.1. Applicability.

a. This section 40. applies to any facility that has aggregate maximum theoretical emissions of 90.7 megagrams (mg) (100 tons) or more of volatile organic compounds (VOCs) per calendar year in the absence of control devices; provided that this section 40. applies to any source or sources within such facility other than those sources subject to regulation under sections 11. through 39. VOC emissions from sources regulated under sections 11. through 39., but which fall below the applicability thresholds of these sections, and thus are not subject to the emissions control standards of these sections, shall be included in the determination of maximum theoretical emissions for a facility but shall not be subject to the requirements of this section 40. Emissions from sources listed in section 40.1.d. shall not be included in the determination of maximum theoretical emissions for a facility.

b. The owner or operator of a coating line or operation, whose emissions are below this applicability threshold, shall comply with the certification, recordkeeping, and reporting requirements of section 40.6.a.

c. The owner or operator of a non-coating source, whose emissions are below this applicability threshold, shall comply with the certification, recordkeeping, and reporting requirements of section 40.6.b.

d. The requirements of this section 40. shall not apply to coke ovens (including by-product recovery plants), fuel combustion sources, barge loading facilities, jet engine test cells, vegetable oil processing facilities, wastewater treatment facilities, iron and steel production, surface impoundments, pits; and boilers, industrial furnaces, and incinerators having a destruction efficiency of 95 percent or greater.

e. The requirements of this section 40. shall not apply to any facility bound by an order or permit, enforceable by the Director, which limits the facility's emissions to less than 100 tons of VOC per calendar year without the application of control devices.

40.2. Definitions. -- As used in this section 40., all terms not defined herein shall have the meaning given them in section 2.

a. "Reasonably available control measures" (also denoted as RACM) means an emission limit or limits that reflect the application of control technology and/or abatement techniques or measures that are reasonably available, considering technological and economic feasibility. Such emission limits may be considered on a plant-wide basis to achieve emission reduction requirements in the most cost effective manner.

b. "Fugitive emissions" means those emissions which could not reasonably pass through a stack, chimney, vent, or other functionally equivalent opening.

40.3. Standards. -- The owner or operator of a facility subject to this section 40. shall:

a. Except as provided in section 40.3.b.,

1. With respect to any existing non-fugitive emission source which has maximum theoretical emissions of 6 pounds per hour or more, comply with an emission control plan established on a case-by-case basis approved by the Director that meets the definition of reasonably available control measures (RACM) and achieves at least a 90 percent reduction in emissions below the total (aggregate) maximum theoretical emissions from all such non-fugitive emission sources subject to RACM requirements; and

2. With respect to each process unit producing a product or products, intermediate or final, in excess of 1000 megagrams (Mg) (1,100 tons) per year, regardless of whether such product or products are listed in 40 CFR 60.489, comply with an emission control plan for fugitive sources using the methods and criteria of section 37., or alternative methods and criteria approved by the Director. The Director may exempt a process unit from fugitive emission control requirements upon satisfactory demonstration that emissions are of minor significance.

b. With respect to such sources as described in sections 40.3.a.1. and 40.3.a.2., comply with emission limits and measures based upon an alternative emissions reduction plan approved by the Director considering technical, economic and air quality benefit considerations that, at a minimum, maintains emission control measures incorporated as part of any federally approved maintenance plan for the county or area in which the source is located.

c. With respect to any source at a facility subject to this section 40., which source has maximum theoretical emissions of 6 pounds per hour or more and is constructed, modified or begins operating after the effective date of this rule, comply with a control plan developed on a case-by-case basis approved by the Director that meets the definition of reasonably available control technology (RACT) in section 2.60. for both fugitive and non-fugitive emission sources.

40.4. Submissions and Approval of Control Plans

a. Within 90 days after the effective date of this rule, the owner or operator of a facility subject to this section 40. shall submit any required amendments to the case-by-case RACT control plans previously submitted to the Director, that revise such control plans to meet the definition of reasonably available control measures (RACM).

b. Notwithstanding the provisions of section 9.2., the owner or operator of a facility subject to this rule solely due to this section 40., that requires a major process change and/or major capital investment to comply with RACM requirements, may petition

the Director for an additional extension beyond December 31, 1996, for compliance certification, and the Director may grant such extension when warranted. Provided however, such compliance certification date shall be no later July 31, 1997 .

c. The Director shall not approve a RACM plan or an alternative emissions reduction plan under this section 40. unless such plan includes:

1. A commitment to develop and submit a complete RACT plan to the Director within 180 days of a finding by the Director that a violation of the National Ambient Air Quality Standard for ozone has occurred within the county or maintenance area in which the source is located; and

2. A commitment to achieving full implementation of RACT within 2 years of approval of the RACT plan by the Director.

d. A finding by the Director that a violation of the National Ambient Air Quality Standard for ozone has occurred shall be made based upon verification of a monitored ozone standard violation in the county or maintenance area in which the source is located. The three maintenance areas (the Huntington area, comprising Cabell and Wayne counties; the Charleston area, comprising Kanawha and Putnam counties; and the Parkersburg area, comprising Wood county) shall be treated separately and independently for any such finding(s).

e. All RACM control plans, RACT control plans, and alternative emissions reduction plans approved by the Director pursuant to this section 40. shall be embodied in a consent order or permit in accordance with 45CSR13 or 45CSR30, as required. A facility owner or operator may at any time petition the Director to approve revisions to these plans. The decision concerning said petition shall be issued by the Director in accordance with 45CSR13 or 45CSR30, as required, or a consent order. Any such revisions shall be subject to the public participation requirements of 45CSR13 or 45CSR30.

f. The owner or operator of a facility subject to this section 40. may submit for approval by the Director an emission control plan that meets the definition of reasonably available control technology (RACT) in section 2.60.

40.5. Test methods and procedures. -- The owner or operator of any source subject to this section 40. shall demonstrate compliance with section 40.3. by using the applicable test methods specified in sections 41. through 46 or by other means approved by the Director. Notwithstanding the requirements of section 41.1., EPA approval for alternate test methods to demonstrate compliance shall not be required for sources which are subject solely to emission control requirements specified in section 40.3.

40.6. Reporting and Recordkeeping Requirements for Exempt Non-Control Technique Guideline (CTG) Sources.

a. An owner or operator of a coating line or operation that is exempt from the emission limitations in section 40.3. shall comply with the certification, recordkeeping, and reporting requirements in section 4.2.

b. An owner or operator of a non-coating source that is exempt from the emission limitations in section 40.3. shall submit, upon request by the Director, records that document that the source is exempt from these requirements.

1. These records shall be submitted to the Director within 30 days from the date of request.

2. If such records are not made available, the source will be considered subject to the limits in section 40.3.

40.7. Reporting and Recordkeeping Requirements for Subject Non-CTG Coating Sources. -- An owner or operator of a coating line or operation subject to this section 40. and complying with section 40.3. shall comply with the certification, recordkeeping, and reporting requirements in section 4.

40.8. Reporting and Recordkeeping Requirements for Subject Non-CTG, Non-Coating Sources.

a. The owner or operator of the subject VOC sources shall perform all testing and maintain the results of all tests and calculations required under sections 40.3. and 40.5. to demonstrate that the subject source is in compliance.

b. The owner or operator of the subject VOC source shall maintain these records in a readily accessible location for a minimum of 3 years, and shall make these records available to the Director upon verbal or written request.

c. The owner or operator of any facility containing sources subject to this section 40. shall comply with the requirements in section 5. except that such requirements, as they apply to sources solely subject to this section 40., may be modified by the Director upon petition by the owner or operator. Any such modified requirements shall be embodied in the facility's control plan (RACM, RACT or alternative plan) and reflected in the associated consent order or permit issued pursuant to 45CSR13 or 45CSR30.

§45-21-41. Test Methods and Compliance Procedures: General Provisions.

41.1. Test methods. -- The owner or operator of any volatile organic compound (VOC) source required to comply with sections 11. through 40. shall, at the owner's or operator's expense, demonstrate compliance by using the methods of sections 41. through 47. or alternative methods that are approved by the Director and the U.S. EPA and shall meet all the requirements of this section 41.

41.2. Preparation of test plan and quality assurance program. -- At least 30 days before the initiation of a required test under section 44., the owner or operator shall submit a test plan that shall be approved by the Director before the results of the test will be considered acceptable. This test plan shall include the following minimum information:

a. The purpose of the proposed test and the applicable section of sections 11. through 40. of this regulation;

b. A detailed description of the facility to be tested, including a line diagram of the facility, locations of test sites, and facility operation conditions for the test;

c. A detailed description of the test methods and procedures, equipment, and sampling sites, i.e., a test plan;

d. A time table for the following:

1. Date for the compliance test;

2. Date of submittal of preliminary results to the Director (not later than 30 days after sample collection); and

3. Date of submittal of final test report (not later than 60 days after completion of on-site sampling); and

e. Proposed corrective actions should the test results show noncompliance.

f. Internal QA program. -- The internal QA program shall include, at a minimum, the activities planned by routine operators and analysts to provide an assessment of test data precision. An example of internal QA is the sampling and analysis of replicable samples.

g. External QA program.

1. The external QA program shall include, at a minimum, application of plans for a test method performance audit (PA) during the performance test.

2. The external QA program may also include systems audits, which include the opportunity for on-site evaluation by the Director of instrument calibration, data validation, sample logging, and documentation of quality control data and field maintenance activities.

3. The PA's shall consist of blind audit samples provided by the Director and analyzed during the performance test to provide a measure of test data bias.

A. The Director shall require the owner or operator to analyze PA samples during each performance test when audit samples are available.

B. Information concerning the availability of audit materials for a specific performance test may be obtained by contacting the Emission Measurement Technical Information Center at (919) 541-2237.

C. If the Director has prior knowledge that an audit material is available, he or she may contact the Atmospheric Research and Exposure Assessment Laboratory directly at (919) 541-4531.

D. All other audit materials may be obtained by calling (919) 541-7834.

E. The evaluation criteria applied to the interpretation of the PA results and the subsequent remedial actions required of the owner or operator are the sole responsibility of the Director.

41.3. Process operation. -- The owner or operator shall be responsible for providing:

a. Sampling ports, pipes, lines, or appurtenances for the collection of samples and data required by the test methods and procedures;

b. Safe access to the sample and data collection locations; and

c. Light, electricity, and the utilities required for sample and data collection.

41.4. Summary of results. -- No later than 30 days after the sample collection, the owner or operator shall submit preliminary results to the Director.

41.5. Final report. -- No later than 60 days after completion of the on-site sampling, the owner or operator shall submit a test report to the Director. The test report shall include the following minimum information:

a. Process description;

b. Air pollution capture system and control device description;

c. Process conditions during testing;

d. Test results and example calculations;

e. Description of sampling locations and test methods;

f. Quality assurance measures; and

g. Field and analytical data.

§45-21-42. Test Methods and Compliance Procedures: Determining the Volatile Organic Compound (VOC) Content of Coatings and Inks.

42.1. Sampling procedures shall follow the guidelines presented in:

a. ASTM D3925: Standard practice for sampling liquid paints and related pigment coatings; or

b. ASTM E300: Standard practice for sampling industrial chemicals.

42.2. The analytical methods specified below shall be used to determine the VOC content of each coating, as applied:

a. Method 24 of 40 CFR Part 60, Appendix A, shall be used in the determination of total volatile content, water content, and density of coatings. For the determination of total volatile content, all samples shall be oven-dried at 100°C for 1 hour.

b. To determine the total volatile content, water content, and density of multi-component coatings, the following procedures shall be used in addition to Method 24 of 40 CFR Part 60, Appendix A:

1. The components shall be mixed in a storage container in proportions the same as those in the coating, as applied. The mixing shall be accomplished by weighing the components in the proper proportion into a container which is closed between additions and during mixing. Approximately 100 ml of coating shall be prepared in a container just large enough to hold the mixture prior to withdrawing a sample.

2. For determination of volatile content, a sample shall be withdrawn from the mixed coating, and then transferred to a dish where the sample shall stand for at least 1 hour, but no more than 24 hours prior to being oven dried at 110°C for 1 hour.

3. For determination of the water content and density of multicomponent coatings, samples shall be taken from the same 100 ml mixture of coating and shall be analyzed by the appropriate ASTM method referenced in Method 24 of 40 CFR Part 60, Appendix A.

c. Method 24A of 40 CFR Part 60, Appendix A, shall be used in the determination of total volatile content, water content, and density of any publication rotogravure printing ink and related coatings.

d. The following ASTM method may be used as an additional procedure related to determining VOC: ASTM D4457-85 - Standard test method for determination of dichloromethane and 1,1,1, trichloroethane in paints and coatings by direct injection into a gas chromatograph (the procedure delineated above may be used to develop protocols for any

compounds specifically exempted from the definition of VOC).

42.3. Use of adaptations to test methods. -- Use of an adaptation to any of the analytical methods specified in section 42.2. may be approved by the Director and the U.S. EPA on a case-by case basis. An owner or operator shall submit sufficient documentation for the Director and the U.S. EPA to find that the analytical methods specified in sections 42.2.a., 42.2.b., and 42.2.c. will yield inaccurate results and that the proposed adaptation is appropriate.

42.4. Each sample collected for analysis shall meet the following criteria:

a. Each sample shall be at least 1 pint taken into a 1-pint container at a location and time such that the sample will be representative of the coating or ink, as applied (i.e., the sample shall include any dilution solvent or VOC added during the manufacturing process);

b. If a sample larger than 1 pint is obtained, the sample container shall be of a size such that the sample completely fills the container;

c. The container shall be tightly sealed immediately after the sample is taken;

d. Any solvent or other VOC added after the sample is taken shall be measured and accounted for in the calculations in section 42.3.; and

e. For multiple-component coatings, separate samples of each component shall be obtained.

42.5. Calculations for determining the VOC content of coatings and inks from data as determined by Method 24 or 24A of 40 CFR Part 60, Appendix A, shall follow the guidance provided in the following documents:

a. "A Guideline for Surface Coating Calculations", EPA-340/1-86-016; and

b. "Procedures for Certifying Quantity of Volatile Organic Compounds Emitted by Paint, Ink and Other Coatings", (Revised June 1986) EPA-450/3-84-019.

§45-21-43. Test Methods and Compliance Procedures: Alternative Compliance Methods for Surface Coating.

43.1. Daily-weighted average. -- The daily-weighted average VOC content, in units of mass of VOC per unit volume of coating, minus water and exempt compounds, as applied, of the coatings used on a day on a coating line or operation shall be calculated using the following equation:

$$VOC_w = \frac{\sum_{i=1}^{n} V_i \; C_i}{V_T}$$

where:

VOC_W =The daily-weighted average VOC content of the coatings, as applied, used on a coating line or operation in units of kilograms of VOC per liter of coating (kg VOC/L) (pounds of VOC per gallon of coating [lb VOC/gal]), minus water and exempt compounds;

n = The number of different coatings, as applied, each day on a coating line or operation;

V_i = The volume of each coating, as applied, each day on a coating line or operation in units of L (gal), minus water and exempt compounds; and

C_i = The VOC content of each coating, as applied, each day on a coating line or operation in units of kg VOC/L of coating (lb VOC/gal), minus water and exempt compounds; and

V_T = The total volume of all coating, as applied, each day on a coating line or operation in units of L (gal), minus water and exempt compounds.

43.2. Overall emission reduction efficiency for control systems. -- The overall emission reduction efficiency needed to demonstrate compliance is determined each day as follows:

a. Obtain the emission limitation from the applicable section of this regulation.

b. Calculate the emission limitation on a solids basis according to the following equation:

$$S = \frac{C}{1 - \left(\frac{C}{d} \right)}$$

where:

S = The VOC emission limitation in terms of kg VOC/L of coating solids (lb

VOC/gal);

C = The VOC emission limitation in terms of kg VOC/L of coating (lb/gal), minus water and exempt compounds; and

d = The density of VOC for converting emission limitation to a solids basis. The density equals 0.882 kg/L (7.36 lb/gal).

c. Calculate the required overall emission reduction efficiency of the control system for the day according to the following equation:

$$E = \left[\frac{(VOC_a - S)}{VOC_a} \right] \times 100$$

where:

E = The required overall emission reduction efficiency of the control system for the day;

VOC_a = (1) The maximum VOC content of the coatings, as applied, used each day on the subject coating line or operation, in units of kg VOC/L of coating solids (lb/gal), as determined by the applicable test methods and procedures specified in section 42.; or (2) The daily-weighted average VOC content, as applied, of the coatings used each day on the subject coating line or operation, in units of kg VOC/L of coating solids (lb/gal), as determined by the applicable test methods and procedures specified in section 42. and the procedure in section 43.2.d.; and

S = VOC emission limitation in terms of kg VOC/L of coating solids (lb VOC/gal).

d. The daily-weighted average VOC content, as applied, of the coatings used on a coating line or operation in units of mass of VOC per unit volume of coating solids shall be calculated by the following equation:

$$VOC_{ws} = \frac{\sum_{i=1}^{n} W_{voc_i} D_i}{\sum_{i=1}^{n} V_i VS_i}$$

where:

VOC_{ws} =The daily-weighted average VOC content, as applied, of the coatings used on a coating line or operation in units of mass of VOC per unit volume of coating solids;

n = The number of different coatings, as applied, used in a day on a coating line or operation;

V_i = The volume of each coating (i), as applied, used in a day on a coating line or

operation in units of liters (L) (gallons [gal]);

W_{voc_i} = The weight fraction of VOC in each coating (i), as applied, used in a day on a coating line or operation in units of kg VOC/kg coating (lb/lb);

D_i = The density of each coating (i), as applied, used in a day on a coating line or operation in units of kg coating/L of coating (lb/gal);

VS_i = The volume fraction solids content of each coating (i), as applied, used on a day on a coating line or operation in units of L solids/L coating (gal/gal);

§45-21-44. Test Methods and Compliance Procedures: Emission Capture and Destruction or Removal Efficiency and Monitoring Requirements.

44.1. Determining the efficiency of volatile organic compound (VOC) capture systems.

a. Definitions and abbreviations. -- For purposes of this section 44., the following definitions and abbreviations apply:

1. "Gas/gas method" means either of two methods for determining capture which rely only on gas phase measurements. One method requires construction of a temporary total enclosure (TTE) to assure all potential fugitive emissions are measured while the other method uses the room or building which houses the source as an enclosure.

2. "Hood" means a partial enclosure or canopy for capturing and exhausting, by means of a draft, the organic vapors or other fumes rising from a coating process or other source.

3. "Liquid/gas method" means either of two methods for determining capture which require both gas phase and liquid phase measurements and analysis. One liquid/gas method requires construction of a temporary total enclosure, the other uses the building or room which houses the facility as an enclosure.

4. "Process line" means any coating line, coating operation, or printing press.

5. "PTE" is a permanent total enclosure, which contains a process that emits VOC and meets the specifications given in Procedure T in Appendix A of this regulation.

6. "TTE" is a temporary total enclosure which is built around a process that emits VOC and meets the specifications given in Procedure T in Appendix A of this regulation.

7. "BE" is a building or room enclosure that contains a process that emits VOC. If a BE is to substitute for a PTE or TTE, the appropriate requirements given in Procedure T in Appendix A of this regulation shall be met.

b. Applicability.

1. The requirements of section 44.1.c. shall apply to all regulated VOC emitting processes employing a control system except as provided below.

2. If a source owner or operator installs a PTE that meets EPA specifications, and which directs all VOC to a control device, the capture efficiency is

assumed to be 100 percent, and the source is exempted from the requirements described in section 44.1.c. Procedure T in Appendix A of this regulation shall be used to determine whether a structure is a PTE. This does not exempt a source from performance of any control device efficiency testing required under this regulation. In addition, a source shall demonstrate that all criteria for a PTE are met during the testing for capture efficiency.

3. If a source owner or operator uses a control device designed to collect and recover VOC (e.g. carbon adsorber), an explicit measurement of capture efficiency is not necessary if the conditions given below are met. The overall emission reduction efficiency of the control system can be determined each day by directly comparing the liquid VOC input to the process (L) to the recovered liquid VOC. The procedure for use in this situation is specified in 40 CFR 60.433 with the following modifications:

A. The source owner or operator shall be able to equate solvent usage with solvent recovery on a 24-hour (daily) basis, rather than a 30-day weighted average as given in 40 CFR 60.433. This shall be done within 72 hours following each 24-hour period; and

B. If the solvent recovery system controls multiple process lines, the source owner or operator shall be able to demonstrate that the overall control (i.e., the total recovered solvent VOC divided by the sum of liquid VOC input to all process lines venting to the control system) meets or exceeds the most stringent standard applicable for any process line venting to the control system.

c. Specific Requirements.

1. The capture efficiency shall be measured using one of the four protocols given in sections 44.1.c.3.A. through 44.1.c.3.D.

2. Any error margin associated with a test protocol shall not be incorporated into the results of a capture efficiency test.

3. Any source required to comply with this section 44. shall use one of the following protocols to measure capture efficiency, unless a suitable alternative protocol is approved by the Director and the U.S. EPA:

A. Gas/gas method using TTE. -- Procedure T in Appendix A of this regulation shall be used to determine whether a temporary enclosure is a TTE. The capture efficiency equation to be used for this protocol is:

$$CE = \frac{G}{G + F}$$

where:

CE = capture efficiency, decimal fraction

G = mass of VOC captured and delivered to control device using a TTE
F = mass of fugitive VOC that escapes from a TTE.

Procedure G.2 in Appendix A of this regulation is used to obtain G. Procedure F.1 in Appendix A of this regulation is used to obtain F.

B. Liquid/gas method using TTE. -- Procedure T in Appendix A of this regulation shall be used to determine whether a temporary enclosure is a TTE. The capture efficiency equation to be used for this protocol is:

$$CE = \frac{L - F}{L}$$

where:

CE = capture efficiency, decimal fraction
L = mass of liquid VOC input to process
F = mass of fugitive VOC that escapes from a TTE.

Procedure L in Appendix A of this regulation is used to obtain L. Procedure F.1 in Appendix A of this regulation is used to obtain F.

C. Gas/gas method using the building or room (BE) in which the source is located as the enclosure and in which G and F are measured while operating only the source to be tested. -- All fans and blowers in the building or room shall be operated as they would under normal production. The capture efficiency equation to be used for this protocol is:

$$CE = \frac{G}{G + F_B}$$

where:

CE = capture efficiency, decimal fraction
G = mass of VOC captured and delivered to a control device
F_B = mass of fugitive VOC that escapes from building enclosure.

Procedure G.2 in Appendix A of this regulation is used to obtain G. Procedure F.2 in Appendix A of this regulation is used to obtain F_B.

D. Liquid/gas method using the building or room (BE) in which the source is located as the enclosure and in which L and F are measured while operating only the source to be tested. All fans and blowers in the building or room shall be operated as they would under normal production. The capture efficiency equation to be used for this protocol is:

$$CE = \frac{L - F_B}{L}$$

where:

CE = capture efficiency, decimal fraction

L = mass of liquid VOC input to process

F_B = mass of fugitive VOC that escapes from building enclosure.

Procedure L in Appendix A of this regulation is used to obtain L. Procedure F.2 in Appendix A of this regulation is used to obtain F_B.

d. Recordkeeping and Reporting.

1. All sources complying with this section 44. shall maintain on file a copy of the capture efficiency protocol submitted to the Director. All results of appropriate test methods and CE protocols shall be reported to the Director within sixty (60) days of the test date. A copy of the results shall be kept on file with the source.

2. If any changes are made to capture or control equipment, the source is required to notify the Director within thirty (30) days of these changes and a new capture efficiency and/or control device destruction or removal efficiency test may be required.

44.2. Determining the destruction or removal efficiency of incinerators and carbon adsorbers.

a. Testing.

1. The control device destruction or removal efficiency shall be determined from data obtained by simultaneously measuring the inlet and outlet gas-phase VOC concentrations and gas volumetric flow rates in accordance with the gas-phase test methods specified in section 45. The control device destruction or removal efficiency shall be calculated using the following equation:

$$E = \frac{\sum_{i=1}^{n} Q_i C_i - \sum_{j=1}^{m} Q_j C_j}{\sum_{i=1}^{n} Q_i C_i}$$

where:

E = VOC destruction efficiency of the control device;

Q_i = Volumetric flow rate of the effluent gas flowing through stack i entering the control device, dry standard cubic meters per hour (dscmh);

C_i = Concentration of VOC (as carbon) in the effluent gas flowing through stack i entering the control device, ppmv;

Q_j = Volumetric flow rate of the effluent gas flowing through stack j leaving the control device, dscmh;

C_j = Concentration of VOC (as carbon) in the effluent gas flowing through stack j leaving the control device, ppmv;
n = The number of vents to the control device; and
m = The number of vents after the control device.

2. A source utilizing a PTE (or a BE as a PTE) shall demonstrate that this enclosure meets the requirements given in Procedure T in Appendix A of this regulation for a PTE during any testing of a control device.

3. A source utilizing a TTE (or a BE as a TTE) shall demonstrate that this enclosure meets the requirements given in Procedure T in Appendix A of this regulation for a TTE during testing of a control device. The source shall also provide documentation that the quality assurance criteria for a TTE have been achieved.

b. Monitoring.

1. Any owner or operator who uses an incinerator or regenerative carbon adsorber to comply with any part of this regulation shall install, calibrate, certify to the Director, operate, and maintain monitoring equipment. The monitoring equipment shall monitor the following parameters:

A. Continuous monitoring of the combustion chamber temperature of each thermal incinerator or afterburner;

B. Continuous monitoring of the temperature immediately before and after each catalytic incinerator bed;

C. For each carbon adsorption bed the VOC concentration and flow shall be monitored before and after the carbon adsorption bed. The monitor shall be equipped with a continuous recording device. An alternative continuous monitoring program may be used if the monitoring program can be demonstrated to be equally as effective, as determined by the Director.

2. The continuous temperature monitoring equipment shall be equipped with a continuous recorder and have an accuracy of ±1 percent of the combustion temperature being measured expressed in degrees Celsius (°C) or ±0.5°C, whichever is greater.

3. The owner or operator shall ensure that the quality assurance measures in section 47.10. are met.

44.3. Determining the overall emission reduction efficiency. -- The overall emission reduction efficiency of the emission control system shall be determined each day as the product of the capture efficiency and the control device destruction or removal efficiency; or for each solvent recovery system, by the liquid/liquid test protocol. The results of the capture

efficiency test and control device destruction or removal efficiency test remain valid for each day until a subsequent test is performed. The results of any valid test may be used for each day until superseded by the results of a valid test subsequently performed.

§45-21-45. Test Methods and Compliance Procedures: Determining the Destruction or Removal Efficiency of a Control Device.

45.1. Depending upon the conditions at a test site, one of the following test methods from 40 CFR Part 60, Appendix A, shall be used to determine volatile organic compound (VOC) concentrations of a gas stream at the inlet and outlet of a control device:

a. Method 18;

b. Method 25; or

c. Method 25A.

45.2. The method selected shall be based on consideration of the diversity of organic species present and their total concentration and on consideration of the potential presence of interfering gases. Because of the different response factors for the many organic compounds formed during the combustion process, only Method 25, which measures VOC as carbon, shall be used for determining destruction efficiency of incinerators or catalytic incinerators.

45.3. Except as indicated in sections 45.3.a. and 45.3.b., a test shall consist of three separate runs, each lasting a minimum of 60 minutes (min), unless the Director determines that process variables dictate shorter sampling times.

a. When the method is to be used to determine the efficiency of a fixed-bed carbon adsorption system with a common exhaust stack for all of the individual adsorber vessels, the test shall consist of three separate runs, each coinciding with one or more complete sequences through the adsorption cycles of all the individual adsorber vessels.

b. When the method is to be used to determine the efficiency of a fixed-bed carbon adsorption system with individual exhaust stacks for each adsorber vessel, each adsorber vessel shall be tested individually. The test for each adsorber vessel shall consist of three separate runs. Each run shall coincide with one or more complete adsorption cycles.

45.4. Method 1 or 1A of 40 CFR Part 60, Appendix A, shall be used for velocity traverses.

45.5. Method 2, 2A, 2C, or 2D of 40 CFR Part 60, Appendix A, shall be used for velocity and volumetric flow rates.

45.6. Method 3 or 3A of 40 CFR Part 60, Appendix A, shall be used for O_2 and CO_2 analysis.

45.7. Method 4 of 40 CFR Part 60, Appendix A, shall be used for stack gas moisture.

45.8. Methods 2, 2A, 2C, 2D, 3, 3A and 4 of 40 CFR Part 60, Appendix A, shall be performed, as applicable, at least once during each test run.

45.9. Use of adaptations to test methods. -- Use of an adaptation to any of the analytical methods specified in sections 45.1.and 45.4. through 45.8. may be approved by the Director and the U.S. EPA on a case-by-case basis. An owner or operator shall submit sufficient documentation for the Director and the U.S. EPA to find that the analytical methods specified in sections 45.1. and 45.4. through 45.8. will yield inaccurate results and that the proposed adaptation is appropriate.

§45-21-46. Test Methods and Compliance Procedures: Leak Detection Methods for Volatile Organic Compounds (VOCs).

46.1. Owners or operators required to carry out a leak detection monitoring program shall comply with the following requirements:

a. Monitoring shall be performed in accordance with Method 21 of 40 CFR Part 60, Appendix A.

b. The detection instrument shall meet the performance criteria of Method 21.

c. The detection instrument shall be calibrated before and after use on each day of its use by the methods specified in Method 21. Failure to achieve a post-use calibration precision of 10 percent or less shall constitute grounds for rejecting all tests performed since the last pre-use calibration. In such cases, required leak tests shall be reperformed.

d. Calibration gases shall be:

1. Zero air (less than 10 parts per million [ppm] of hydrocarbon in air); and

2. A mixture of methane or n-hexane and air at a concentration of approximately, but less than, 10,000 ppm methane or n-hexane.

e. The detection instrument probe shall be traversed around all potential leak interfaces as close to the interface as possible as described in Method 21.

46.2. When equipment is tested for compliance with the requirement that there be no detectable emissions, the test shall comply with the following:

a. The requirements of sections 46.1.a. through 46.1.e. shall apply and shall be met; and

b. The background level shall be determined as set forth in Method 21.

46.3. Leak detection tests shall be performed consistent with:

a. "APTI Course SI 417-Controlling Volatile Organic Compound Emissions from Leaking Process Equipment," EPA-450/2-82-015;

b. "Portable Instrument User's Manual for Monitoring VOC Sources," EPA-340/1-86-015;

c. "Protocols for Generating Unit-Specific Emission Estimates for Equipment Leaks of VOC and VHAP," EPA-450/3-88-010; and

d. "Petroleum Refinery Enforcement Manual," EPA-340/1-80-008.

46.4. Use of adaptations to test methods. -- Use of an adaptation to any of the analytical methods specified in sections 46.1., 46.2., and 46.3. may be approved by the Director and the U.S. EPA on a case-by-case basis. An owner or operator shall submit sufficient documentation for the Director and the U.S. EPA to find that the analytical methods specified in sections 46.1., 46.2., and 46.3. will yield inaccurate results and that the proposed adaptation is appropriate.

§45-21-47. Performance Specifications for Continuous Emissions Monitoring of Total Hydrocarbons.

47.1. Applicability.

a. This method applies to the measurement of total hydrocarbons as a surrogate measure for the total gaseous organic concentration of the combustion gas stream. The concentration is expressed in terms of propane.

b. The Director and the U.S. EPA may approve the use of gas conditioning, including cooling to between 4.4 and 18°C (40 and 64°F), and condensate traps to reduce the moisture content of the sample gas if the owner/operator:

1. Successfully demonstrates to the Director and the U.S. EPA that the use of such system is necessary for the specific application; and

2. Includes in the demonstration a quantification of the total hydrocarbon concentration (THC) lost to the gas conditioning system.

47.2. Principal. -- A gas sample is extracted from the source through a heated sample line and heated glass fiber filter to a flame ionization detector (FID). Results are reported as volume concentration equivalents of the propane.

47.3. Definitions. -- As used in this section 47., all terms not defined herein shall have the meaning given them in section 2.

a. "Calibration drift" means the difference in the measurement system response to a mid-level calibration gas before and after a stated period of operation during which no unscheduled maintenance, repair, or adjustment took place.

b. "Calibration error" means the difference between the gas concentration indicated by the measurement system and the known concentration of the calibration system.

c. "Calibration gas" means a known concentration of a gas in an appropriate diluent gas.

d. "Measurement system" means the total equipment required for the determination of the inlet and outlet gas concentrations, percent capture efficiency, and gas outlet emission rate. The system consists of the following major subsystems:

1. Sample interface--the portion of the system that is used for one or more of the following:

A. Sample acquisition;

B. Sample transportation;

C. Sample conditioning; or

D. Protection of the analyzer from the effects of the stack effluent;

2. Organic analyzer--the portion of the system that senses organic concentration and generates an output proportional to the gas concentration;

3. Data recorder--the portion of the system that records a permanent record of the measurement values; and

4. Flow rate system--a gas volume meter meeting the requirements of Method 2A, Section 2.1 (40 CFR Part 60, Appendix A).

e. "Response time" means the time interval from a step change in pollutant concentration at the inlet to the emission measurement system to the time at which 95 percent of the corresponding final value is reached as displayed on the recorder.

f. "Span value" means for most incinerators, a 50 parts per million (ppm) propane span. Higher span values may be necessary if propane emissions are significant. For convenience, the span value should correspond to 100 percent of the recorder scale.

g. "Zero drift" means the difference in the measurement system response to a zero level calibration gas before and after a stated period of operation during which no unscheduled maintenance, repair, or adjustment took place.

47.4. Apparatus. -- [Note: this method is often applied in highly explosive areas. Caution should be exercised in choice of equipment and installation.] An acceptable measurement system includes a sample interface system, a calibration valve, gas filter and a pump preceding the analyzer. THC measurement systems are designated HOT or COLD systems based on the operating temperatures of the system. In HOT systems, all components in contact with the sample gas (probe, calibration valve, filter, and sample lines) as well as all parts of the flame ionization analyzer between the sample inlet and the FID must be maintained between 150° to 175°C. This includes the sample pump if it is located on the inlet side of the FID. A condensate trap may be installed, if necessary, to prevent any condensate entering the FID. The essential components of the measurement system are as follows:

a. Organic concentration analyzer. -- An FID capable of meeting or exceeding the specifications in this method.

b. Sample probe.

1. Stainless steel, or equivalent, three-hole rake type. Sample holes shall be 4 millimeters (mm) (0.2 inches [in.] in diameter or smaller and located at 16.7, 50, and 83.3 percent of the equivalent stack diameter; or

2. A single opening probe so that a gas sample is collected from the centrally located 10 percent area of the stack cross section.

c. Sample line. -- Stainless steel or Teflon[1] tubing to transport the sample gas to the analyzer. The sample line from the heated probe shall be heated to between 150 and 175°C (302 and 347°F).

d. Calibration valve assembly.

1. A heated three-way valve assembly to direct the zero and calibration gases to the analyzers; or

2. Other methods, such as quick-connect lines, to route calibration gas to the analyzers.

e. Particulate filter. -- An in-stack or an out-of-stack glass fiber filter if exhaust gas particulate loading is significant. An out-of-stack filter must be heated.

f. Recorder. -- A strip-chart recorder, analog computer, or digital recorder for recording measurement data. The minimum data recording shall be one measurement value per minute.

47.5. Calibration gases and other gases.

a. Gases used for calibration, fuel, and combustion air shall be contained in compressed gas cylinders.

b. Preparation of calibration gases shall be done according to the procedure in Protocol No. 1, listed in the reference in section 47.12.b.

c. The recommended shelf life for each calibration gas cylinder over which the concentration does not change more than ±2 percent from the certified value shall be obtained from the cylinder manufacturer.

d. The following calibration and other gases shall be used:

1. Fuel. -- A 40 percent hydrogen and 60 percent helium or 40 percent hydrogen and 60 percent nitrogen gas mixture to avoid an oxygen synergism effect

[1]Mention of trade names or specific products does not constitute endorsement by the Director.

that reportedly occurs when oxygen concentration varies significantly from a mean value.

2. Zero gas. -- High purity air with less than 0.1 parts per million by volume (ppmv) of organic material methane or carbon equivalent or less than 0.1 percent of the span value, whichever is greater.

3. Low-level calibration gas. -- Propane calibration gas (in air or nitrogen) with a concentration equivalent to 20 to 30 percent of the applicable span value.

4. Mid-level calibration gas. -- Propane calibration gas with a concentration equivalent to 45 to 55 percent of the applicable span value.

5. High-level calibration gas. Propane calibration gas with a concentration equivalent to 80 to 90 percent of the applicable span value.

47.6. Measurement system performance specifications.

a. Zero drift shall be less than ±3 percent of the span value.

b. Calibration drift shall be less than ±3 percent of the span value.

c. Calibration error shall be less than ±5 percent of the calibration gas value.

47.7. Pretest preparations.

a. Selection of sampling site.

1. The location of the sampling site shall be determined from the applicable regulation or purpose of the test (i.e., exhaust stack, inlet line, etc).

2. The sample port shall be located at least 1.5 meters (4.9 feet) or 2 equivalent diameters upstream of the gas discharge to the atmosphere.

b. Location of sample probe. -- The sample probe must be installed so that the probe is centrally located in the stack, pipe or duct and is sealed tightly at the stack port connection.

c. Measurement systems preparation. -- Prior to the emission test, the measurement system must be assembled following the manufacturer's written instructions in preparing the sample interface and the organic analyzer. The system must be operable.

d. Calibration error test.

1. Immediately prior to the test series (within 2 hours of the start

of the test), zero gas and high-level calibration gas shall be introduced at the calibration valve assembly.

2. The analyzer output shall be adjusted to the appropriate levels, if necessary.

3. The predicted response for the low-level and mid-level gases shall be calculated based on a linear response line between the zero and high-level responses.

4. Low-level and mid-level calibration gases shall be introduced successively to the measurement system.

5. The analyzer responses for low-level and mid-level calibration gases shall be recorded, and the differences between the measurement system responses and the predicted responses shall be determined. These differences must be less than ±5 percent of the respective calibration gas value. If not, the measurement system shall be deemed not acceptable and must be replaced or repaired prior to testing. No adjustments to the measurement system shall be conducted after the calibration and before the drift determination found in section 47.8.b.

6. If adjustments are necessary before the completion of the test series, the drift checks shall be performed prior to the required adjustments, and the calibration following the adjustments shall be repeated.

7. If multiple electronic ranges are to be used, each additional range must be checked with a mid-level calibration gas to verify the multiplication factor.

e. Response time test.

1. Zero gas shall be introduced into the measurement system at the calibration valve assembly.

2. When the system output has stabilized, the owner or operator shall switch quickly to the high-level calibration gas.

3. The time shall be recorded from the concentration change to the measurement system response equivalent to 95 percent of the step change.

4. The test shall be repeated three times and the results averaged.

47.8. Emission measurement test procedure.

a. Organic measurement.

1. Sampling shall begin at the start of the test period.

2. Time and any required process information shall be recorded, as appropriate.

3. Periods of process interruption or cyclic operation shall be noted on the recording chart.

b. Drift determination.

1. Immediately following the completion of the test period and hourly during the test period, the zero and mid-level calibration gases shall be introduced, one at a time, to the measurement system at the calibration valve assembly. No adjustments to the measurement system shall be made until after both the zero and calibration drift checks are made.

2. The analyzer response shall be recorded.

3. If the drift values exceed the specified limits, the test results shall be invalidated preceding the check, and the test shall be repeated following corrections to the measurement system.

4. Alternatively, the test measurement system may be recalibrated as in section 47.7.d. and the results reported using both sets of calibration data (i.e., data determined prior to the test period and data determined following the test period).

47.9. Organic concentration calculations. -- The average organic concentration shall be determined in terms of ppmv propane by the integration of the output recording over the period specified in the applicable regulation.

47.10. Quality assurance.

a. The owner or operator shall assure proper calibration, maintenance, and operation of the continuous emissions monitoring system on a continual basis.

b. The owner or operator shall establish a quality assurance program to evaluate and monitor performance on a continual basis. The following checks shall routinely be done:

1. A daily calibration check for each monitor. The calibration shall be adjusted if the check indicates the instrument's calibration drift exceeds the specification established in section 47.6.;

2. A daily system audit which includes the following:

A. A review of the calibration check data;

B. An inspection of the recording system;

C. An inspection of the control panel warning lights; and

D. An inspection of the sample transport/interface system (e.g., flowmeters, filters), as appropriate;

3. A quarterly calibration error test at the span midpoint; and

4. The entire performance specification test repeated every second year.

47.11. Reporting of total hydrocarbon levels.

a. The total hydrocarbon concentration (THC) levels from the initial compliance certification test shall be reported as ppm propane for inlet and outlet concentrations and as a percent reduction across the control device.

b. THC levels shall be expressed in milligrams per second (mg/sec) (pounds per second [lb/sec]).

c. This conversion shall be accomplished using the following equation:

$$\text{THC, mg/sec} = (\text{THC ppm propane}) \times (\text{stack gas flow}) \times 2.8 \times 10^{-2}$$

where:

THC ppm propane	=	the total hydrocarbon concentration as actually measured by this method in ppm propane at the inlet or outlet.
Stack gas flow	=	measured in dry standard cubic feet as time needed as determined by the flowmeter system or Methods 2 and 4 of 40 CFR Part 60, Appendix A.
2.8×10^{-2}	=	constant to account for the conversion of units.

47.12. References.

a. Measurement of Volatile Organic Compounds--Guideline Series. U. S. Environmental Protection Agency, Research Triangle Park, North Carolina. Publication No. EPA-450/2-78-041. June 1978. p. 46-54.

b. Traceability Protocol for Establishing True Concentrations of Gases Used for Calibration and Audits of Continuous Source Emission Monitors (Protocol No. 1). U. S. Environmental Protection Agency, Environmental Monitoring and Support Laboratory. Research Triangle Park, North Carolina. June 1973.

c. Gasoline Vapor Emission Laboratory Evaluation--Part 2. U. S. Environmental Protection Agency. Office of Air Quality Planning and Standards. Research Triangle Park, North Carolina. EMB Report No. 75-GAS-6. August 1975.

d. Methods Manual for Compliance with the BIF Regulations--Burning Hazardous Waste in Boilers and Industrial Furnaces, EPA/530-SW-91-010, December 1990: Section 2.0 - "Performance Specifications for Continuous Emission Monitoring of Carbon Monoxide and Oxygen for Incinerators, Boilers, and Industrial Furnaces Burning Hazardous Waste", pages 2-1 through 2-35.

§45-21-48. Quality Control Procedures for Continuous Emission Monitoring Systems (CEMS).

48.1. CEMS quality control (QC) program. -- Each owner or operator of a CEMS shall develop and implement a CEMS QC program. At a minimum, each QC program shall include written procedures that describe in detail step-by-step procedures and operations for each of the following:

a. Initial and routine periodic calibration of the CEMS.

b. Calibration drift (CD) determination and adjustment of the CEMS.

c. Preventative maintenance of the CEMS (including spare parts inventory).

d. Data recording, calculations, and reporting.

e. Accuracy audit procedures including sampling and analysis methods.

f. Program of corrective action for malfunctioning CEMS.

48.2. Determining out-of-control condition for the CEMS.

a. If either the zero (or low-level) or high-level CD exceeds twice the applicable drift specification in 40 CFR Part 60, Appendix B, for five consecutive daily periods, the CEMS is out-of-control.

b. If either the zero (or low-level) or high-level CD exceeds four times the applicable drift specification in 40 CFR Part 60, Appendix B, during any CD check, the CEMS is out-of-control.

c. If the CEMS fails a performance audit (PA), the CEMS is out-of-control.

48.3. Determining the out-of-control time period for the CEMS.

a. The beginning of the out-of-control period is:

1. The time corresponding to the completion of the fifth consecutive daily CD check with CD in excess of two times the allowable limit, or

2. The time corresponding to completion of the daily CD check preceding the daily CD check that results in a CD in excess of four times the allowable limit.

b. The end of the out-of-control period is the time corresponding to the completion of the CD check following corrective action that results in the CD's at both the

zero (or low-level) and high-level measurement points being within the corresponding allowable CD limit (i.e., either two times or four times the allowable limit in 40 CFR Part 60, Appendix B).

c. If the CEMS failed a PA, the beginning of the out-of-control period is the time corresponding to the completion of the failed audit test. The end of the out-of-control period is the time corresponding to a successful retest of the PA sample.

48.4. Recordkeeping. -- The owner or operator shall keep the QC procedure described in section 48.1. in a readily accessible location for at least 3 years and shall make the procedure available to the Director upon verbal or written request.

48.5. Reporting. -- The owner or operator shall submit all information concerning out-of-control periods including beginning and end dates and descriptions of corrective actions taken in the excess emissions report defined in 40 CFR 60.7(c).

APPENDIX A–VOC CAPTURE EFFICIENCY

Procedure F.1 - Fugitive VOC Emissions from Temporary Enclosures

1. INTRODUCTION

1.1 Applicability. This procedure is applicable for determining the fugitive volatile organic compounds (VOC) emissions from a temporary total enclosure (TTE). It is intended to be used as a segment in the development of liquid/gas or gas/gas protocols for determining VOC capture efficiency (CE) for surface coating and printing operations.

1.2 Principle. The amount of fugitive VOC emissions (F) from the TTE is calculated as the sum of the products of the VOC content (C_{Fj}), the flow rate (Q_{Fj}), and the sampling time (θ_F) from each fugitive emissions point.

1.3 Estimated Measurement Uncertainty. The measurement uncertainties are estimated for each fugitive emission point as follows: $Q_{Fj} = \pm 5.5$ percent and $C_{Fj} = \pm 5.0$ percent. Based on these numbers, the probable uncertainty for F is estimated at about ± 7.4 percent.

1.4 Sampling Requirements. A capture efficiency test shall consist of at least three sampling runs. The sampling time for each run should be at least 8 hours, unless otherwise approved.

1.5 Notes. Because this procedure is often applied in highly explosive areas, caution and care should be exercised in choosing appropriate equipment and installing and using the equipment. Mention of trade names or company products does not constitute endorsement. All gas concentrations (percent, ppm) are by volume, unless otherwise noted.

2. APPARATUS AND REAGENTS

2.1 Gas VOC Concentration. A schematic of the measurement system is shown in Figure F.1-1. The main components are described below:

2.1.1 Sample Probe. Stainless steel or equivalent. The probe must be heated to prevent VOC condensation.

2.1.2 Calibration Valve Assembly. Three-way valve assembly at the outlet of sample probe to direct the zero and calibration gases to the analyzer. Other methods, such as quick-connect lines, to route calibration gases to the outlet of the sample probe are acceptable.

2.1.3 Sample Line. Stainless steel or Teflon tubing to transport the sample gas to the analyzer. The sample line must be heated to prevent condensation.

2.1.4 Sample Pump. A leak-free pump to pull the sample gas through the system at a flow rate sufficient to minimize the response time of the measurement system. The components of the pump that contact the gas stream should be constructed of stainless steel or Teflon. The sample pump must be heated to prevent condensation.

2.1.5 Sample Flow Rate Control. A sample flow rate control valve and rotameter, or equivalent, to maintain a constant sampling rate within 10 percent. The flow control valve and rotameter must be heated to prevent condensation. A control valve may also be located on the sample pump bypass loop to assist in controlling the sample pressure and flow rate.

2.1.6 Sample Gas Manifold. Capable of diverting a portion of the sample gas stream to the flame ionization analyzer (FIA) and the remainder to the bypass discharge vent. The manifold components should be constructed

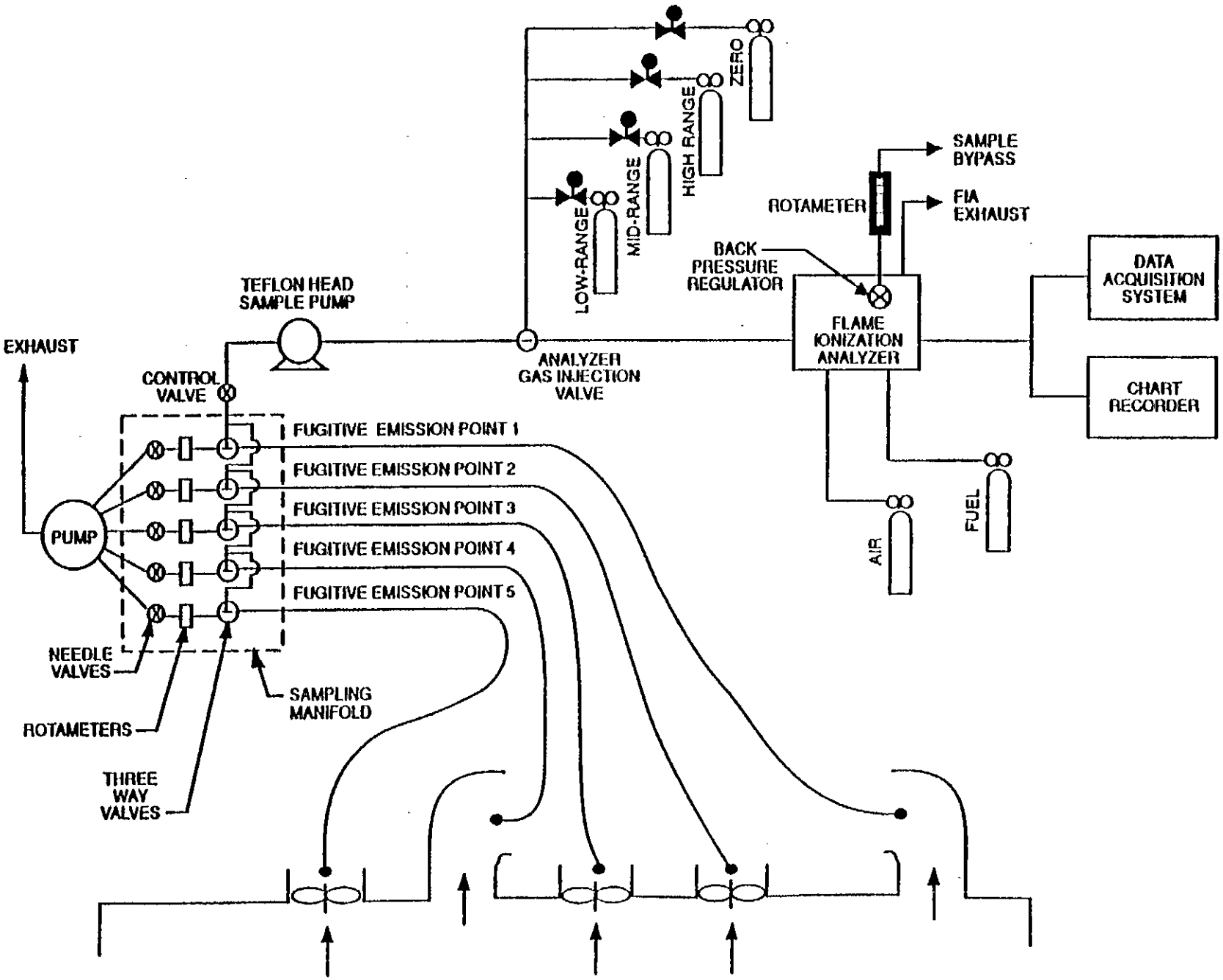

Figure F.1-1 Fugitive Emissions Measurement System

of stainless steel or Teflon. If emissions are to be measured at multiple locations, the measurement system shall be designed to use separate sampling probes, lines, and pumps for each measurement location and a common sample gas manifold and FIA. The sample gas manifold and connecting lines to the FIA must be heated to prevent condensation.

2.1.7 Organic Concentration Analyzer. An FIA with a span value of 1.5 times the expected concentration as propane; however, other span values may be used if it can be demonstrated that they would provide more accurate measurements. The system shall be capable of meeting or exceeding the following specifications:

2.1.7.1 Zero Drift. Less than ±3.0 percent of the span value.

2.1.7.2 Calibration Drift. Less than ±3.0 percent of the span value.

2.1.7.3 Calibration Error. Less than ±5.0 percent of the calibration gas value.

2.1.7.4 Response Time. Less than 30 seconds.

2.1.8 Integrator/Data Acquisition System. An analog or digital device or computerized data acquisition system used to integrate the FIA response or compute the average response and record measurement data. The minimum data sampling frequency for computing average or integrated values is one measurement value every 5 seconds. The device shall be capable of recording average values at least once per minute (min).

2.1.9 Calibration and Other Gases. Gases used for calibration, fuel, and combustion air (if required) are contained in compressed gas cylinders. All calibration gases shall be traceable to National Institute of Standards and Testing (NIST) standards and shall be certified by the manufacturer to ±1 percent of the tag value. Additionally, the manufacturer of the cylinder should provide a recommended shelf life for each calibration gas cylinder over which the concentration does not change more than ±2 percent from the certified value. For calibration gas values not generally available, alternative methods for preparing calibration gas mixtures, such as dilution systems, may be used with prior approval.

2.1.9.1 Fuel. A 40 percent H_2/60 percent He or 40 percent H_2/60 percent N_2 gas mixture is recommended to avoid an oxygen synergism effect that reportedly occurs when oxygen concentration varies significantly from a mean value.

2.1.9.2 Carrier Gas. High-purity air with less than 1 ppm of organic material (as propane or carbon equivalent) or less than 0.1 percent of the span value, whichever is greater.

2.1.9.3 FIA Linearity Calibration Gases. Low-, mid-, and high-range gas mixture standards with nominal propane concentrations of 20-30, 45-55, and 70-80 percent of the span value in air, respectively. Other calibration values and other span values may be used if it can be shown that more accurate measurements would be achieved.

2.1.10 Particulate Filter. An in-stack or an out-of-stack glass fiber filter is recommended if exhaust gas particulate loading is significant. An out-of-stack filter must be heated to prevent any condensation unless it can be demonstrated that no condensation occurs.

2.2 Fugitive Emissions Volumetric Flow Rate.

2.2.1 Method 2 or 2A Apparatus. For determining volumetric flow rate.

2.2.2 Method 3 Apparatus and Reagents. For determining molecular weight of the gas stream. An estimate of the molecular weight of the gas stream may be used if it can be justified.

2.2.3 Method 4 Apparatus and Reagents. For determining moisture content, if necessary.

2.3 Temporary Total Enclosure. The criteria for designing a TTE are discussed in Appendix T.

3. DETERMINATION OF VOLUMETRIC FLOW RATE OF FUGITIVE EMISSIONS

3.1 Locate all points where emissions are exhausted from the TTE. Using Method 1, determine the sampling points. Be sure to check each site for cyclonic or swirling flow.

3.2 Measure the velocity at each sampling site at least once every hour during each sampling run using Method 2 or 2A.

4. DETERMINATION OF VOC CONTENT OF FUGITIVE EMISSIONS

4.1 Analysis Duration. Measure the VOC responses at each fugitive emission point during the entire test run or, if applicable, while the process is operating. If there are multiple emission locations, design a sampling system to allow a single FIA to be used to determine the VOC responses at all sampling locations.

4.2 Gas VOC Concentration.

4.2.1 Assemble the sample train as shown in Figure F.1-1. Calibrate the FIA and conduct a system check according to the procedures in Sections 5.1 and 5.3, respectively.

4.2.2 Install the sample probe so that the probe is centrally located in the stack, pipe, or duct and is sealed tightly at the stack port connection.

4.2.3 Inject zero gas at the calibration valve assembly. Allow the measurement system response to reach zero. Measure the system response time as the time required for the system to reach the effluent concentration after the calibration valve has been returned to the effluent sampling position.

4.2.4 Conduct a system check before and a system drift check after each sampling run according to the procedures in Sections 5.2 and 5.3. If the drift check following a run indicates unacceptable performance, the run is not valid. The tester may elect to perform system drift checks during the run not to exceed one drift check per hour.

4.2.5 Verify that the sample lines, filter, and pump temperatures are 120 ± 5°C.

4.2.6 Begin sampling at the start of the test period and continue to sample during the entire run. Record the starting and ending times and any required process information as appropriate. If multiple emission locations are sampled using a single FIA, sample at each location for the same amount of time (e.g., 2 min) and continue to switch from one location to another for the entire test run. Be sure that total sampling time at each location is the same at the end of the test run. Collect at least 4 separate measurements from each sample point during each hour of testing. Disregard the response measurements at each sampling location until two times the response time of the measurement system has elapsed. Continue sampling for at least 1 min and record the concentration measurements.

4.3 Background Concentration.

4.3.1 Determination of VOC Background Concentration.

4.3.1.1 Locate all natural draft openings (NDOs) of the TTE. A sampling point shall be centrally located outside of the TTE at four equivalent diameters from each NDO, if possible. If there are more than six NDOs, choose six sampling points evenly spaced among the NDOs.

4.3.1.2 Assemble the sample train as shown in Figure F.1-2. Calibrate the FIA and conduct a system check according to the procedures in Sections 5.1 and 5.3.

4.3.1.3 Position the probe at the sampling location.

4.3.1.4 Determine the response time, conduct the system check, and sample according to the procedures

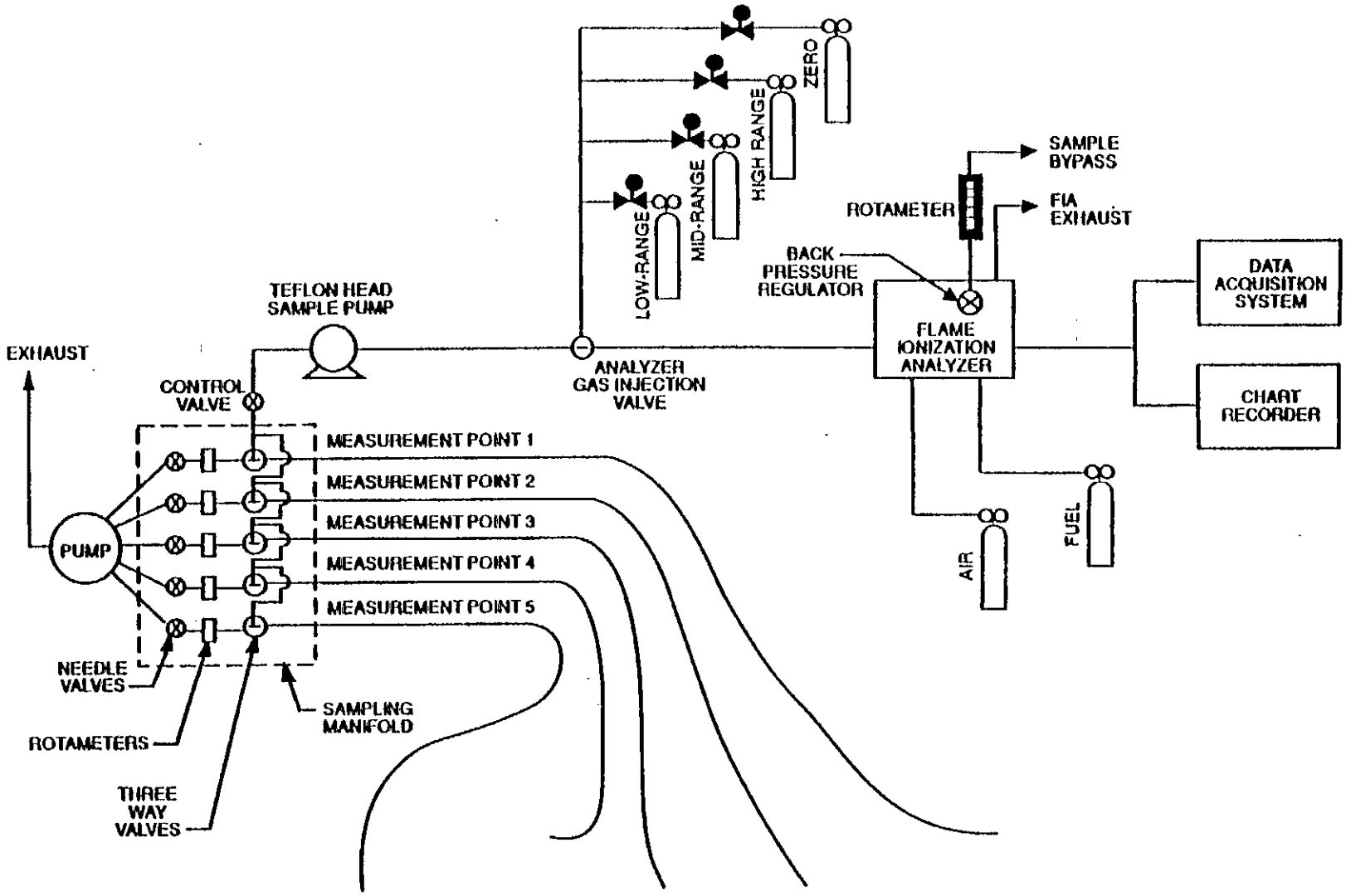

Figure F.1-2 Background Measurement System

described in Sections 4.2.3 to 4.2.6.

4.4 Alternative Procedure. The direct interface sampling and analysis procedure described in Section 7.2 of Method 18 may be used to determine the gas VOC concentration. The system must be designed to collect and analyze at least one sample every 10 min.

5. CALIBRATION AND QUALITY ASSURANCE

5.1 FIA Calibration and Linearity Check. Make necessary adjustments to the air and fuel supplies for the FIA and ignite the burner. Allow the FIA to warm up for the period recommended by the manufacturer. Inject a calibration gas into the measurement system and adjust the back-pressure regulator to the value required to achieve the flow rates specified by the manufacturer. Inject the zero- and the high-range calibration gases and adjust the analyzer calibration to provide the proper responses. Inject the low- and mid-range gases and record the responses of the measurement system. The calibration and linearity of the system are acceptable if the responses for all four gases are within 5 percent of the respective gas values. If the performance of the system is not acceptable, repair or adjust the system and repeat the linearity check. Conduct a calibration and linearity check after assembling the analysis system and after a major change is made to the system.

5.2 System Drift Checks. Select the calibration gas concentration that most closely approximates that of the fugitive gas emissions to conduct the drift checks. Introduce the zero and calibration gas at the calibration valve assembly and verify that the appropriate gas flow rate and pressure are present at the FIA. Record the measurement system responses to the zero and calibration gases. The performance of the system is acceptable if the difference between the drift check measurement and the value obtained in Section 5.1 is less than 3 percent of the span value. Conduct a system drift check at the end of each run.

5.3 System Check. Inject the high-range calibration gas at the inlet of the sampling probe and record the response. The performance of the system is acceptable if the measurement system response is within 5 percent of the value obtained in Section 5.1 for the high-range calibration gas. Conduct a system check before each test run.

5.4 Analysis Audit. Immediately before each test, analyze an audit cylinder as described in Section 5.2. The analysis audit must agree with the audit cylinder concentration within 10 percent.

6. NOMENCLATURE

A_i = area of NDO, square feet (ft^2).

A_N = total area of all NDOs in the enclosure, ft^2.

C_{Bi} = corrected average VOC concentration of background emissions at point i, parts per million (ppm) propane.

C_B = average background concentration, ppm propane.

C_{DH} = average measured concentration for the drift check calibration gas, ppm propane.

C_{DO} = average system drift check concentration for zero concentration gas, ppm propane.

C_{Fj} = corrected average VOC concentration of fugitive emissions at point j, ppm propane.

C_H = actual concentration of the drift check calibration gas, ppm propane.

C_i = uncorrected average background VOC concentration at point i, ppm propane.

C_j = uncorrected average VOC concentration measured at point j, ppm propane.
F = total VOC content of fugitive emissions, kilograms (kg).
K_1 = 1.830×10^{-6} kilograms per cubic meters - parts per million (kg /[m^3-ppm]).
n = number of measurement points.
Q_{Fj} = average effluent volumetric flow rate corrected to standard conditions at fugitive emissions point j, cubic meters per minute (m^3/min).
θ_F = total duration of fugitive emissions sampling run, min.

7. CALCULATIONS

7.1 Total VOC Fugitive Emissions.

$$F = \sum_{j=1}^{n} \left(C_{Fj} - C_B\right) Q_{Fj}\, \theta_F\, K_1$$

7.2 VOC Concentration of the Fugitive Emissions at Point j.

$$C_{Fj} = \left(C_j - C_{DO}\right) \frac{C_H}{C_{DH} - C_{DO}}$$

7.3 Background VOC Concentration at Point i.

$$C_{Bi} = \left(C_i - C_{DO}\right) \frac{C_H}{C_{DH} - C_{DO}}$$

7.4 Average Background Concentration.

$$C_B = \frac{\sum_{i=1}^{n} C_{Bi}\, A_i}{A_N}$$

NOTE: If the concentration at each point is within 20 percent of the average concentration of all points, the simple average concentration may be used:

$$C_B = \frac{\sum_{i=1}^{n} C_{Bi}}{n}$$

Procedure F.2 - Fugitive VOC Emissions from Building Enclosures

1. INTRODUCTION

1.1 Applicability. This procedure is applicable for determining the fugitive volatile organic compounds (VOC) emissions from a building enclosure (BE). It is intended to be used as a segment in the development of liquid/gas or gas/gas protocols for determining VOC capture efficiency (CE) for surface coating and printing operations.

1.2 Principle. The total amount of fugitive VOC emissions (F_B) from the BE is calculated as the sum of the products of the VOC content (C_{Fj}) of each fugitive emissions point, its flow rate (Q_{Fj}), and time (θ_F).

1.3 Measurement Uncertainty. The measurement uncertainties are estimated for each fugitive emissions point as follows: $Q_{Fj} = \pm 5.0$ percent and $C_{Fj} = \pm 5.0$ percent. Based on these numbers, the probable uncertainty for F_B is estimated at about ± 11.2 percent. **1.4 Sampling Requirements.** A capture efficiency test shall consist of at least three sampling runs. The sampling time for each run should be at least 8 hours, unless otherwise approved.

1.5 Notes. Because this procedure is often applied in highly explosive areas, caution and care should be exercised in choosing appropriate equipment and installing and using the equipment. Mention of trade names or company products does not constitute endorsement. All gas concentrations (percent, parts per million [ppm]) are by volume, unless otherwise noted.

2. APPARATUS AND REAGENTS

2.1 Gas VOC Concentration. A schematic of the measurement system is shown in Figure F.2-1. The main components are described below:

2.1.1 Sample Probe. Stainless steel or equivalent. The probe shall be heated to prevent VOC condensation.

2.1.2 Calibration Valve Assembly. Three-way valve assembly at the outlet of sample probe to direct the zero and calibration gases to the analyzer. Other methods, such as quick-connect lines, to route calibration gases to the outlet of the sample probe are acceptable.

2.1.3 Sample Line. Stainless steel or Teflon tubing to transport the sample gas to the analyzer. The sample line must be heated to prevent condensation.

2.1.4 Sample Pump. A leak-free pump to pull the sample gas through the system at a flow rate sufficient to minimize the response time of the measurement system. The components of the pump that contact the gas stream shall be constructed of stainless steel or Teflon. The sample pump must be heated to prevent condensation.

2.1.5 Sample Flow Rate Control. A sample flow rate control valve and rotameter, or equivalent, to maintain a constant sampling rate within 10 percent. The flow rate control valve and rotameter must be heated to prevent condensation. A control valve may also be located on the sample pump bypass loop to assist in controlling the sample pressure and flow rate.

2.1.6 Sample Gas Manifold. Capable of diverting a portion of the sample gas stream to the flame ionization analyzer (FIA) and the remainder to the bypass discharge vent. The manifold components shall be constructed of stainless steel or Teflon. If emissions are to be measured at multiple locations, the measurement system shall be designed to use separate sampling probes, lines, and pumps for each measurement location and a common

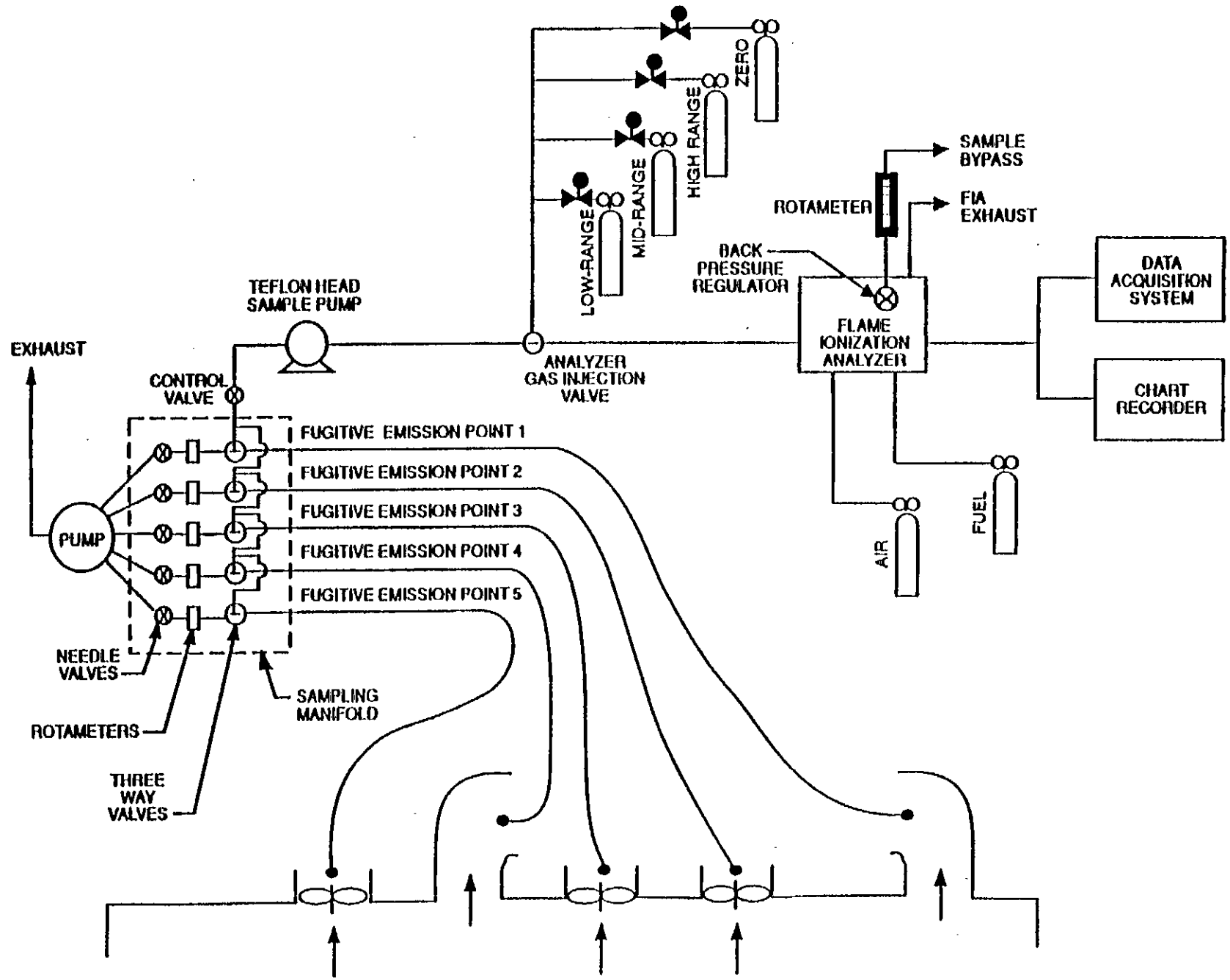

Figure F.2-1 Fugitive Emissions Measurement System

sample gas manifold and FIA. The sample gas manifold must be heated to prevent condensation.

2.1.7 Organic Concentration Analyzer. An FIA with a span value of 1.5 times the expected concentration as propane; however, other span values may be used if it can be demonstrated that they would provide more accurate measurements. The system shall be capable of meeting or exceeding the following specifications:

2.1.7.1 Zero Drift. Less than ±3.0 percent of the span value.

2.1.7.2 Calibration Drift. Less than ±3.0 percent of the span value.

2.1.7.3 Calibration Error. Less than ±5.0 percent of the calibration gas value.

2.1.7.4 Response Time. Less than 30 seconds (sec).

2.1.8 Integrator/Data Acquisition System. An analog or digital device or computerized data acquisition system used to integrate the FIA response or compute the average response and record measurement data. The minimum data sampling frequency for computing average or integrated values is one measurement value every 5 sec. The device shall be capable of recording average values at least once per minute (min).

2.1.9 Calibration and Other Gases. Gases used for calibration, fuel, and combustion air (if required) are contained in compressed gas cylinders. All calibration gases shall be traceable to National Institute of Standards and Testing (NIST) standards and shall be certified by the manufacturer to ±1 percent of the tag value. Additionally, the manufacturer of the cylinder should provide a recommended shelf life for each calibration gas cylinder over which the concentration does not change more than ±2 percent from the certified value. For calibration gas values not generally available, alternative methods for preparing calibration gas mixtures, such as dilution systems, may be used with prior approval.

2.1.9.1 Fuel. A 40 percent H_2/60 percent He or 40 percent H_2/60 percent N_2 gas mixture is recommended to avoid an oxygen synergism effect that reportedly occurs when oxygen concentration varies significantly from a mean value.

2.1.9.2 Carrier Gas. High purity air with less than 1 ppm of organic material (propane or carbon equivalent) or less than 0.1 percent of the span value, whichever is greater.

2.1.9.3 FIA Linearity Calibration Gases. Low-, mid-, and high-range gas mixture standards with nominal propane concentrations of 20-30, 45-55, and 70-80 percent of the span value in air, respectively. Other calibration values and other span values may be used if it can be shown that more accurate measurements would be achieved.

2.1.10 Particulate Filter. An in-stack or an out-of-stack glass fiber filter is recommended if exhaust gas particulate loading is significant. An out-of-stack filter must be heated to prevent any condensation unless it can be demonstrated that no condensation occurs.

2.2 Fugitive Emissions Volumetric Flow Rate.

2.2.1 Flow Direction Indicators. Any means of indicating inward or outward flow, such as light plastic film or paper streamers, smoke tubes, filaments, and sensory perception.

2.2.2 Method 2 or 2A Apparatus. For determining volumetric flow rate. Anemometers or similar devices calibrated according to the manufacturer's instructions may be used when low velocities are present. Vane anemometers (Young-maximum response propeller), specialized pitots with electronic manometers (e.g., Shortridge Instruments Inc., Airdata Multimeter 860) are commercially available with measurement thresholds of 15 and 8 meters per minute (mpm) (50 and 25 feet per minute [fpm]), respectively.

2.2.3 Method 3 Apparatus and Reagents. For determining molecular weight of the gas stream. An estimate

of the molecular weight of the gas stream may be used if it can be justified.

2.2.4 **Method 4 Apparatus and Reagents.** For determining moisture content, if necessary.

3. DETERMINATION OF VOLUMETRIC FLOW RATE OF FUGITIVE EMISSIONS

3.1 **Preliminary Determinations.** The purpose of this exercise is to determine which exhaust points should be measured for volumetric flow rates and VOC concentrations. 3.1.1 **Forced Draft Openings.** Identify all forced draft openings. Determine the volumetric flow rate according to Method 2.

3.1.2 **NDOs Exhaust Points.** The natural draft openings (NDOs) in the roof of a facility are considered to be exhaust points. Determine volumetric flow rate from these NDOs. Divide the cross-sectional area according to Method 1 using 12 equal areas. Use the appropriate velocity measurement devices (e.g., propeller anemometers).

3.1.3 **Other NDOs.**

3.1.3.1 This step is optional. Determine the exhaust flow rate, including that of the control device, from the enclosure and the intake air flow rate. If the exhaust flow rate divided by the intake air flow rate is greater than 1.1, then all other NDOs are not considered to be significant exhaust points.

3.1.3.2 If the option above is not taken, identify all other NDOs and other potential points through which fugitive emissions may escape the enclosure.

Then use the following criteria to determine whether flow rates and VOC concentrations need to be measured:

3.1.3.2.1 Using the appropriate flow direction indicator, determine the flow direction. An NDO with zero or inward flow is not an exhaust point.

3.1.3.2.2 Measure the outward volumetric flow rate from the remainder of the NDOs. If the collective flow rate is 2 percent, or less, of the flow rate from Sections 3.1.1 and 3.1.2, then these NDOs, except those within two equivalent diameters (based on NDO opening) from VOC sources, may be considered to be non-exhaust points.

3.1.3.2.3 If the percentage calculated in Section 3.1.3.2.2 is greater than 2 percent, those NDOs (except those within two equivalent diameters from VOC sources) whose volumetric flow rate total 2 percent of the flow rate from Sections 3.1.1 and 3.1.2 may be considered as non-exhaust points. All remaining NDOs shall be measured for volumetric flow rate and VOC concentrations during the CE test.

3.1.3.2.4 The tester may choose to measure VOC concentrations at the forced exhaust points and the NDOs. If the total VOC emissions from the NDOs are less than 2 percent of the emissions from the forced draft and roof NDOs, then these NDOs may be eliminated from further consideration.

3.2 **Determination of Flow Rates.**

3.2.1 Measure the volumetric flow rate at all locations identified as exhaust points in Section 3.1. Divide each exhaust opening into 9 equal areas for rectangular openings and 8 for circular openings.

3.2.2 Measure the velocity at each site at least once every hour during each sampling run using Method 2 or 2A, if applicable, or using the low velocity instruments in Section 2.2.2.

4. DETERMINATION OF VOC CONTENT OF FUGITIVE EMISSIONS

4.1 **Analysis Duration.** Measure the VOC responses at each fugitive emission point during the entire test run

or, if applicable, while the process is operating. If there are multiple emissions locations, design a sampling system to allow a single FIA to be used to determine the VOC responses at all sampling locations.

4.2 Gas VOC Concentration.

4.2.1 Assemble the sample train as shown in Figure F.2-1. Calibrate the FIA and conduct a system check according to the procedures in Sections 5.1 and 5.3, respectively.

4.2.2 Install the sample probe so that the probe is centrally located in the stack, pipe, or duct and is sealed tightly at the stack port connection.

4.2.3 Inject zero gas at the calibration valve assembly. Allow the measurement system response to reach zero. Measure the system response time as the time required for the system to reach the effluent concentration after the calibration valve has been returned to the effluent sampling position.

4.2.4 Conduct a system check before and a system drift check after each sampling run according to the procedures in Sections 5.2 and 5.3. If the drift check following a run indicates unacceptable performance, the run is not valid. The tester may elect to perform drift checks during the run not to exceed one drift check per hour.

4.2.5 Verify that the sample lines, filter, and pump temperatures are 120 ± 5°C.

4.2.6 Begin sampling at the start of the test period and continue to sample during the entire run. Record the starting and ending times and any required process information as appropriate. If multiple emission locations are sampled using a single FIA, sample at each location for the same amount of time (e.g., 2 min) and continue to switch from one location to another for the entire test run. Be sure that total sampling time at each location is the same at the end of the test run. Collect at least four separate measurements from each sample point during each hour of testing. Disregard the response measurements at each sampling location until two times the response time of the measurement system has elapsed. Continue sampling for at least 1 min and record the concentration measurements.

4.3 Alternative Procedure The direct interface sampling and analysis procedure described in Section 7.2 of Method 18 may be used to determine the gas VOC concentration. The system must be designed to collect and analyze at least one sample every 10 min.

5. CALIBRATION AND QUALITY ASSURANCE

5.1 FIA Calibration and Linearity Check. Make necessary adjustments to the air and fuel supplies for the FIA and ignite the burner. Allow the FIA to warm up for the period recommended by the manufacturer. Inject a calibration gas into the measurement system and adjust the back-pressure regulator to the value required to achieve the flow rates specified by the manufacturer. Inject the zero- and the high-range calibration gases and adjust the analyzer calibration to provide the proper responses. Inject the low- and mid-range gases and record the responses of the measurement system. The calibration and linearity of the system are acceptable if the responses for all four gases are within 5 percent of the respective gas values. If the performance of the system is not acceptable, repair or adjust the system and repeat the linearity check. Conduct a calibration and linearity check after assembling the analysis system and after a major change is made to the system.

5.2 Systems Drift Checks. Select the calibration gas that most closely approximates the concentration of the captured emissions for conducting the drift checks. Introduce the zero and calibration gas at the calibration

valve assembly and verify that the appropriate gas flow rate and pressure are present at the FIA. Record the measurement system responses to the zero and calibration gases. The performance of the system is acceptable if the difference between the drift check measurement and the value obtained in Section 5.1 is less than 3 percent of the span value. Conduct a system drift check at the end of each run.

5.3 System Check. Inject the high range calibration gas at the inlet of the sampling probe and record the response. The performance of the system is acceptable if the measurement system response is within 5 percent of the value obtained in Section 5.1 for the high range calibration gas. Conduct a system check before each test run.

5.4 Analysis Audit. Immediately before each test analyze an audit cylinder as described in Section 5.2. The analysis audit must agree with the audit cylinder concentration within 10 percent.

6. NOMENCLATURE

C_{DH} = average measured concentration for the drift check calibration gas, ppm propane.

C_{DO} = average system drift check concentration for zero concentration gas, ppm propane.

C_{Fj} = corrected average VOC concentration of fugitive emissions at point j, ppm propane.

C_H = actual concentration of the drift check calibration gas, ppm propane.

C_j = uncorrected average VOC concentration measured at point j, ppm propane.

F_B = total VOC content of fugitive emissions from the building, kilograms (kg).

K_1 = 1.830×10^{-6} kilograms per cubic meter - parts per million (kg/[m^3-ppm]).

n = number of measurement points.

Q_{Fj} = average effluent volumetric flow rate corrected to standard conditions at fugitive emissions point j, cubic meter per minute (m^3/min).

θ_F = total duration of capture efficiency sampling run, min.

7. CALCULATIONS

7.1 Total VOC Fugitive Emissions From the Building.

$$F_B = \sum_{j=1}^{n} C_{Fj} \, Q_{Fj} \, \theta_F \, K_1$$

7.2 VOC Concentration of the Fugitive Emissions at Point j.

$$C_{Fj} = \left(C_j - C_{DO}\right) \frac{C_H}{C_{DH} - C_{DO}}$$

Procedure G.1 - Captured VOC Emissions

1. INTRODUCTION

1.1 Applicability. This procedure is applicable for determining the volatile organic compounds (VOC) content of captured gas streams. It is intended to be used as a segment in the development of liquid/gas or gas/gas protocols for determining VOC capture efficiency (CE) for surface coating and printing operations. The procedure may not be acceptable in certain site-specific situations, e.g., when: (1) direct fired heaters or other circumstances affect the quantity of VOC at the control device inlet and (2) particulate organic aerosols are formed in the process and are present in the captured emissions.

1.2 Principle. The amount of VOC captured (G) is calculated as the sum of the products of the VOC content (C_{Gj}), the flow rate (Q_{Gj}), and the sample time (θ_j) from each captured emissions point.

1.3 Estimated Measurement Uncertainty. The measurement uncertainties are estimated for each captured or fugitive emissions point as follows: $Q_{Gj} = \pm 5.5$ percent and $C_{Gj} = \pm 5.0$ percent. Based on these numbers, the probable uncertainty for G is estimated at about ± 7.4 percent.

1.4 Sampling Requirements. A capture efficiency test shall consist of at least three sampling runs. The sampling time for each run should be at least 8 hours, unless otherwise approved.

1.5 Notes. Because this procedure is often applied in highly explosive areas, caution and care should be exercised in choosing appropriate equipment and installing and using the equipment. Mention of trade names or company products does not constitute endorsement. All gas concentrations (percent, parts per million [ppm]) are by volume, unless otherwise noted.

2. APPARATUS AND REAGENTS

2.1 Gas VOC Concentration. A schematic of the measurement system is shown in Figure G.1-1. The main components are described below:

2.1.1 Sample Probe. Stainless steel or equivalent. The probe must be heated to prevent VOC condensation.

2.1.2 Calibration Valve Assembly. Three-way valve assembly at the outlet of sample probe to direct the zero and calibration gases to the analyzer. Other methods, such as quick-connect lines, to route calibration gases to the outlet of the sample probe are acceptable.

2.1.3 Sample Line. Stainless steel or Teflon tubing to transport the sample gas to the analyzer. The sample line must be heated to prevent VOC condensation.

2.1.4 Sample Pump. A leak-free pump, to pull the sample gas through the system at a flow rate sufficient to minimize the response time of the measurement system. The components of the pump that contact the gas stream shall be constructed of stainless steel or Teflon. The sample pump must be heated to prevent condensation.

2.1.5 Sample Flow Rate Control. A sample flow rate control valve and rotameter, or equivalent, to maintain a constant sampling rate within 10 percent. The flow rate control valve and rotameter must be heated to prevent condensation. A control valve may also be located on the sample pump bypass loop to assist in controlling the sample pressure and flow rate.

2.1.6 Sample Gas Manifold. Capable of diverting a portion of the sample gas stream to the flame ionization

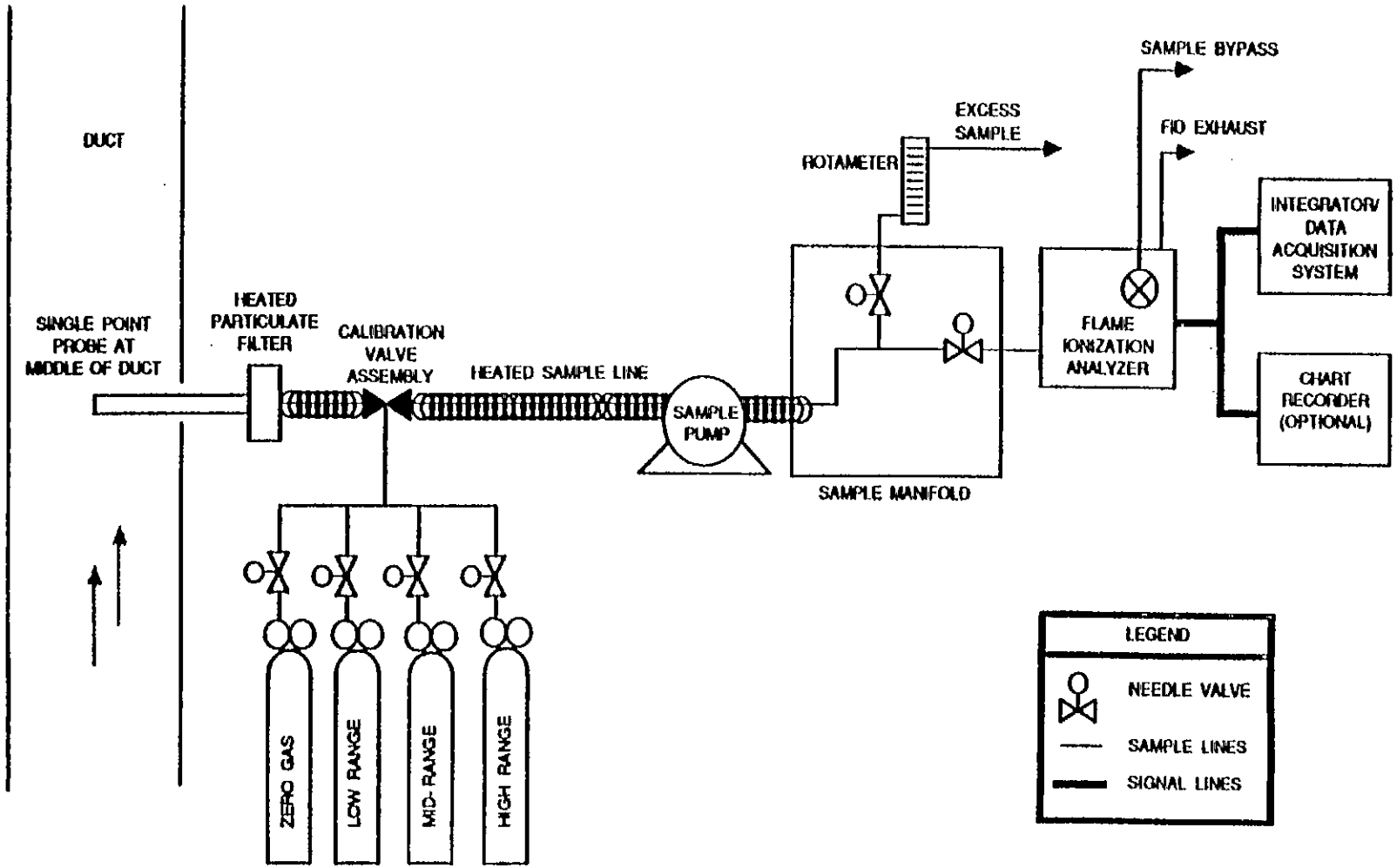

Figure G.1-1 Gas VOC Concentration Measurement System

analyzer (FIA) and the remainder to the bypass discharge vent. The manifold components shall be constructed of stainless steel or Teflon. If captured or fugitive emissions are to be measured at multiple locations, the measurement system shall be designed to use separate sampling probes, lines, and pumps for each measurement location and a common sample gas manifold and FIA. The sample gas manifold and connecting lines to the FIA must be heated to prevent condensation.

2.1.7 Organic Concentration Analyzer. An FIA with a span value of 1.5 times the expected concentration as propane; however, other span values may be used if it can be demonstrated that they would provide more accurate measurements. The system shall be capable of meeting or exceeding the following specifications:

2.1.7.1 Zero Drift. Less than ± 3.0 percent of the span value.

2.1.7.2 Calibration Drift. Less than ± 3.0 percent of the span value.

2.1.7.3 Calibration Error. Less than ± 5.0 percent of the calibration gas value.

2.1.7.4 Response Time. Less than 30 seconds (sec).

2.1.8 Integrator/Data Acquisition System. An analog or digital device or computerized data acquisition system used to integrate the FIA response or compute the average response and record measurement data. The minimum data sampling frequency for computing average or integrated values is one measurement value every 5 sec. The device shall be capable of recording average values at least once per minute (min).

2.1.9 Calibration and Other Gases. Gases used for calibration, fuel, and combustion air (if required) are contained in compressed gas cylinders. All calibration gases shall be traceable to National Institute of Standards and Testing (NIST) standards and shall be certified by the manufacturer to ± 1 percent of the tag value. Additionally, the manufacturer of the cylinder should provide a recommended shelf life for each calibration gas cylinder over which the concentration does not change more than ± 2 percent from the certified value. For calibration gas values not generally available, alternative methods for preparing calibration gas mixtures, such as dilution systems, may be used with prior approval.

2.1.9.1 Fuel. A 40 percent H_2/60 percent He or 40 percent H_2/60 percent N_2 gas mixture is recommended to avoid an oxygen synergism effect that reportedly occurs when oxygen concentration varies significantly from a mean value.

2.1.9.2 Carrier Gas. High purity air with less than 1 parts per million (ppm) of organic material (as propane or carbon equivalent) or less than 0.1 percent of the span value, whichever is greater.

2.1.9.3 FIA Linearity Calibration Gases. Low-, mid-, and high-range gas mixture standards with nominal propane concentrations of 20-30, 45-55, and 70-80 percent of the span value in air, respectively. Other calibration values and other span values may be used if it can be shown that more accurate measurements would be achieved.

2.1.10 Particulate Filter. An in-stack or an out-of-stack glass fiber filter is recommended if exhaust gas particulate loading is significant. An out-of-stack filter must be heated to prevent any condensation unless it can be demonstrated that no condensation occurs.

2.2 Captured Emissions Volumetric Flow Rate.

2.2.1 Method 2 or 2A Apparatus. For determining volumetric flow rate.

2.2.2 Method 3 Apparatus and Reagents. For determining molecular weight of the gas stream. An estimate of the molecular weight of the gas stream may be used if it can be justified.

2.2.3 Method 4 Apparatus and Reagents. For determining moisture content, if necessary.

3. DETERMINATION OF VOLUMETRIC FLOW RATE OF CAPTURED EMISSIONS

3.1 Locate all points where emissions are captured from the affected facility. Using Method 1, determine the sampling points. Be sure to check each site for cyclonic or swirling flow.

3.2 Measure the velocity at each sampling site at least once every hour during each sampling run using Method 2 or 2A.

4. DETERMINATION OF VOC CONTENT OF CAPTURED EMISSIONS

4.1 **Analysis Duration.** Measure the VOC responses at each captured emissions point during the entire test run or, if applicable, while the process is operating. If there are multiple captured emission locations, design a sampling system to allow a single FIA to be used to determine the VOC responses at all sampling locations.

4.2 Gas VOC Concentration.

4.2.1 Assemble the sample train as shown in Figure G.1-1. Calibrate the FIA according to the procedure in Section 5.1.

4.2.2 Conduct a system check according to the procedure in Section 5.3.

4.2.3 Install the sample probe so that the probe is centrally located in the stack, pipe, or duct and is sealed tightly at the stack port connection.

4.2.4 Inject zero gas at the calibration valve assembly. Allow the measurement system response to reach zero. Measure the system response time as the time required for the system to reach the effluent concentration after the calibration valve has been returned to the effluent sampling position.

4.2.5 Conduct a system check before and a system drift check after each sampling run according to the procedures in Sections 5.2 and 5.3. If the drift check following a run indicates unacceptable performance, the run is not valid. The tester may elect to perform system drift checks during the run not to exceed one drift check per hour.

4.2.6 Verify that the sample lines, filter, and pump temperatures are 120 ± 5°C.

4.2.7 Begin sampling at the start of the test period and continue to sample during the entire run. Record the starting and ending times and any required process information as appropriate. If multiple captured emission locations are sampled using a single FIA, sample at each location for the same amount of time (e.g., 2 min) and continue to switch from one location to another for the entire test run. Be sure that total sampling time at each location is the same at the end of the test run. Collect at least four separate measurements from each sample point during each hour of testing. Disregard the measurements at each sampling location until two times the response time of the measurement system has elapsed. Continue sampling for at least 1 min and record the concentration measurements.

4.3 Background Concentration.

4.3.1 Locate all natural draft openings (NDOs) of the temporary total enclosure (TTE). A sampling point shall be centrally located outside of the TTE at four equivalent diameters from each NDO, if possible. If there are more than six NDOs, choose six sampling points evenly spaced among the NDOs.

4.3.2 Assemble the sample train as shown in Figure G.1-2. Calibrate the FIA and conduct a system check according to the procedures in Sections 5.1 and 5.3. **NOTE:** This sample train shall be a separate sampling train from the one to measure the captured emissions.

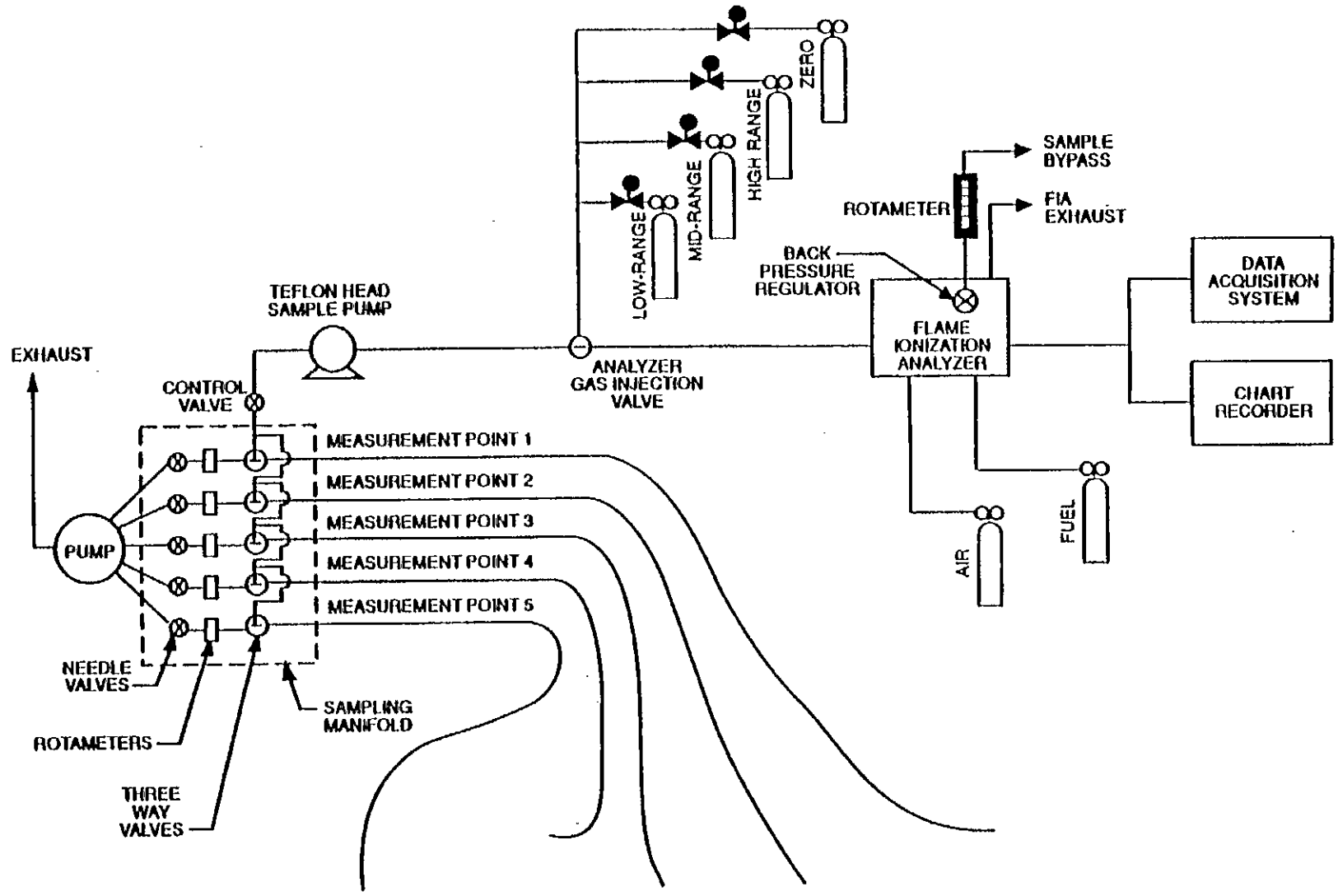

Figure G.1-2 Background Measurement System

4.3.3 Position the probe at the sampling location.

4.3.4 Determine the response time, conduct the system check, and sample according to the procedures described in Sections 4.2.4 to 4.2.7.

4.4 **Alternative Procedure.** The direct interface sampling and analysis procedure described in Section 7.2 of Method 18 may be used to determine the gas VOC concentration. The system must be designed to collect and analyze at least one sample every 10 min.

5. CALIBRATION AND QUALITY ASSURANCE

5.1 **FIA Calibration and Linearity Check.** Make necessary adjustments to the air and fuel supplies for the FIA and ignite the burner. Allow the FIA to warm up for the period recommended by the manufacturer. Inject a calibration gas into the measurement system and adjust the back-pressure regulator to the value required to achieve the flow rates specified by the manufacturer. Inject the zero- and the high-range calibration gases and adjust the analyzer calibration to provide the proper responses. Inject the low- and mid-range gases and record the responses of the measurement system. The calibration and linearity of the system are acceptable if the responses for all four gases are within 5 percent of the respective gas values. If the performance of the system is not acceptable, repair or adjust the system and repeat the linearity check. Conduct a calibration and linearity check after assembling the analysis system and after a major change is made to the system.

5.2 **Systems Drift Checks.** Select the calibration gas that most closely approximates the concentration of the captured emissions for conducting the drift checks. Introduce the zero and calibration gas at the calibration valve assembly and verify that the appropriate gas flow rate and pressure are present at the FIA. Record the measurement system responses to the zero and calibration gases. The performance of the system is acceptable if the difference between the drift check measurement and the value obtained in Section 5.1 is less than 3 percent of the span value. Conduct the system drift checks at the end of each run.

5.3 **System Check.** Inject the high range calibration gas at the inlet of the sampling probe and record the response. The performance of the system is acceptable if the measurement system response is within 5 percent of the value obtained in Section 5.1 for the high range calibration gas. Conduct a system check before and after each test run.

5.4 **Analysis Audit.** Immediately before each test analyze an audit cylinder as described in Section 5.2. The analysis audit must agree with the audit cylinder concentration within 10 percent.

6. NOMENCLATURE

A_i = area of NDO i, square feet (ft^2).

A_N = total area of all NDOs in the enclosure, ft^2.

C_{Bi} = corrected average VOC concentration of background emissions at point i, ppm propane.

C_B = average background concentration, ppm propane.

C_{Gj} = corrected average VOC concentration of captured emissions at point j, ppm propane.

C_{DH} = average measured concentration for the drift check calibration gas, ppm propane.

C_{DO} = average system drift check concentration for zero concentration gas, ppm propane.

C_H = actual concentration of the drift check calibration gas, ppm propane.

C_i = uncorrected average background VOC concentration measured at point i, ppm propane.
C_j = uncorrected average VOC concentration measured at point j, ppm propane.
G = total VOC content of captured emissions, kilograms (kg).
K_1 = 1.830×10^{-6} kilograms per cubic meter - parts per million (kg/[m^3-ppm]).
n = number of measurement points.
Q_{Gj} = average effluent volumetric flow rate corrected to standard conditions at captured emissions point j, cubic meters per minute (m^3/min).
θ_C = total duration of captured emissions sampling run, min.

7. CALCULATIONS

7.1 Total VOC Captured Emissions.

$$G = \sum_{j=1}^{n} \left(C_{Gj} - C_B \right) Q_{Gj} \, \theta_C \, K_1$$

7.2 VOC Concentration of the Captured Emissions at Point j.

$$C_{Gj} = \left(C_j - C_{DO} \right) \frac{C_H}{C_{DH} - C_{DO}}$$

7.3 Background VOC Concentration at Point i.

$$C_{Bi} = \left(C_i - C_{DO} \right) \frac{C_H}{C_{DH} - C_{DO}}$$

7.4 Average Background Concentration.

$$C_B = \frac{\left(\sum_{i=1}^{n} C_{Bi} \, A_i \right)}{A_N}$$

NOTE: If the concentration at each point is within 20 percent of the average concentration of all points, the simple average concentration may be used:

$$C_B = \frac{\sum_{i=1}^{n} C_{Bi}}{n}$$

Procedure G.2 - Captured VOC Emissions (Dilution Technique)

1. INTRODUCTION

1.1 Applicability. This procedure is applicable for determining the volatile organic compounds (VOC) content of captured gas streams. It is intended to be used as a segment in the development of a gas/gas protocol in which fugitive emissions are measured for determining VOC capture efficiency (CE) for surface coating and printing operations. A dilution system is used to reduce the VOC concentration of the captured emission to about the same concentration as the fugitive emissions. The procedure may not be acceptable in certain site-specific situations, e.g., when: (1) direct-fired heaters or other circumstances affect the quantity of VOC at the control device inlet and (2) particulate organic aerosols are formed in the process and are present in the captured emissions.

1.2 Principle. The amount of VOC captured (G) is calculated as the sum of the products of the VOC content (C_{Gj}), the flow rate (Q_{Gj}), and the sampling time (θ_C) from each captured emissions point.

1.3 Estimated Measurement Uncertainty. The measurement uncertainties are estimated for each captured or fugitive emissions point as follows: $Q_{Gj} = \pm 5.5$ percent and $C_{Gj} = \pm 5$ percent. Based on these numbers, the probable uncertainty for G is estimated at about ± 7.4 percent.

1.4 Sampling Requirements. A capture efficiency test shall consist of at least three sampling runs. The sampling time for each run should be at least 8 hours (hr), unless otherwise approved.

1.5 Notes. Because this procedure is often applied in highly explosive areas, caution and care should be exercised in choosing appropriate equipment and installing and using the equipment. Mention of trade names or company products does not constitute endorsement. All gas concentrations (percent, parts per million [ppm]) are by volume, unless otherwise noted.

2. APPARATUS AND REAGENTS

2.1 Gas VOC Concentration. A schematic of the measurement system is shown in Figure G.2-1. The main components are described below:

2.1.1 Dilution System. A Kipp in-stack dilution probe and controller or similar device may be used. The dilution rate may be changed by substituting different critical orifices or adjustments of the aspirator supply pressure. The dilution system shall be heated to prevent VOC condensation. **Note:** An out-of-stack dilution device may be used.

2.1.2 Calibration Valve Assembly. Three-way valve assembly at the outlet of sample probe to direct the zero and calibration gases to the analyzer. Other methods, such as quick-connect lines, to route calibration gases to the outlet of the sample probe are acceptable.

2.1.3 Sample Line. Stainless steel or Teflon tubing to transport the sample gas to the analyzer. The sample line must be heated to prevent condensation.

2.1.4 Sample Pump. A leak-free pump to pull the sample gas through the system at a flow rate sufficient to minimize the response time of the measurement system. The components of the pump that contact the gas stream shall be constructed of stainless steel or Teflon. The sample pump must be heated to prevent condensation.

2.1.5 Sample Flow Rate Control. A sample flow rate control valve and rotameter, or equivalent, to maintain

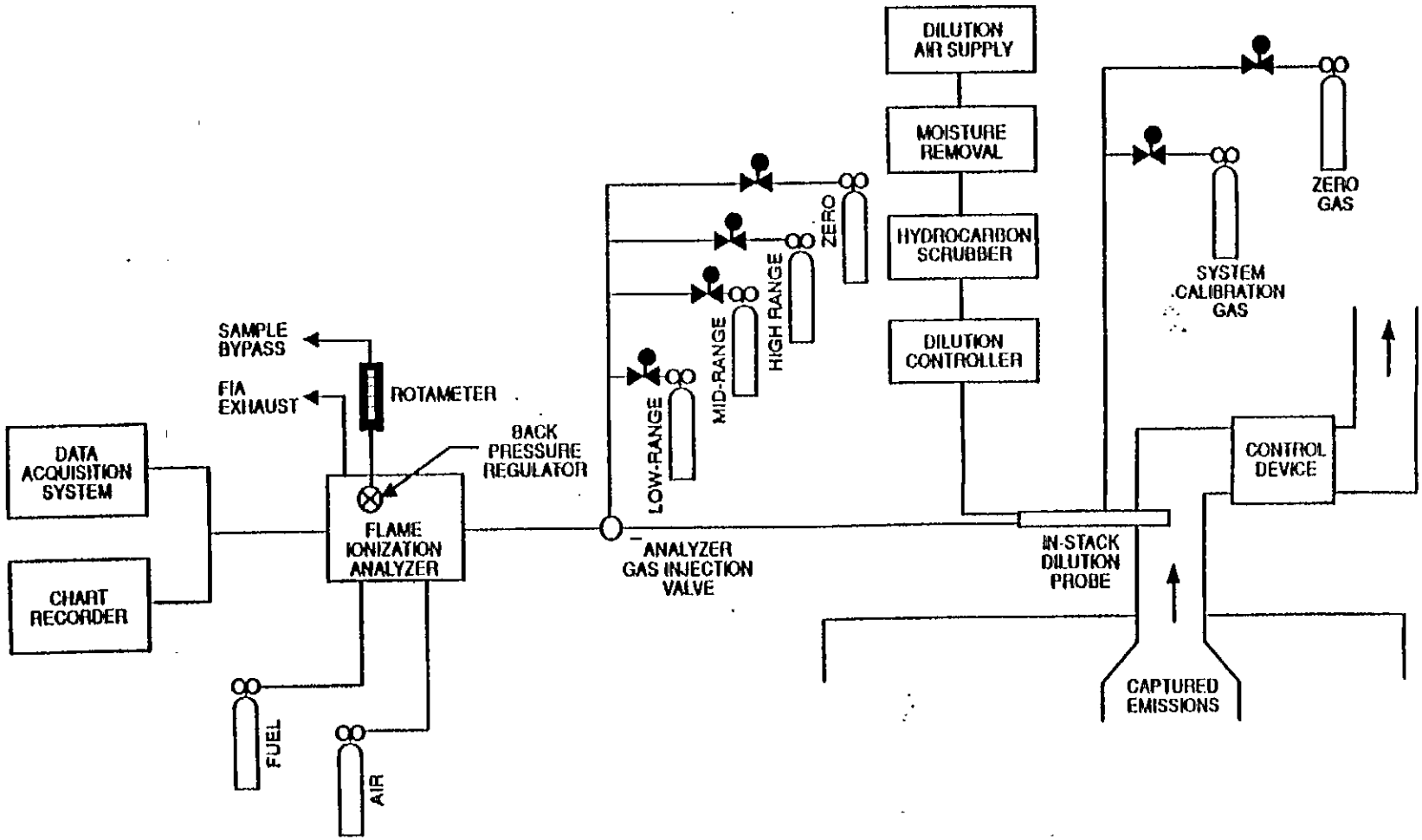

Figure G.2-1 Captured Emissions Measurement System

a constant sampling rate within 10 percent. The flow control valve and rotameter must be heated to prevent condensation. A control valve may also be located on the sample pump bypass loop to assist in controlling the sample pressure and flow rate.

2.1.6 Sample Gas Manifold. Capable of diverting a portion of the sample gas stream to the flame ionization analyzer (FIA) and the remainder to the bypass discharge vent. The manifold components shall be constructed of stainless steel or Teflon. If captured or fugitive emissions are to be measured at multiple locations, the measurement system shall be designed to use separate sampling probes, lines, and pumps for each measurement location and a common sample gas manifold and FIA. The sample gas manifold and connecting lines to the FIA must be heated to prevent condensation.

2.1.7 Organic Concentration Analyzer. An FIA with a span value of 1.5 times the expected concentration as propane; however, other span values may be used if it can be demonstrated that they would provide more accurate measurements. The system shall be capable of meeting or exceeding the following specifications:

2.1.7.1 Zero Drift. Less than ± 3.0 percent of the span value.

2.1.7.2 Calibration Drift. Less than ± 3.0 percent of the span value.

2.1.7.3 Calibration Error. Less than ± 5.0 percent of the calibration gas value.

2.1.7.4 Response Time. Less than 30 seconds (sec).

2.1.8 Integrator/Data Acquisition System. An analog or digital device or computerized data acquisition system used to integrate the FIA response or compute the average response and record measurement data. The minimum data sampling frequency for computing average or integrated values is one measurement value every 5 sec. The device shall be capable of recording average values at least once per min.

2.1.9 Calibration and Other Gases. Gases used for calibration, fuel, and combustion air (if required) are contained in compressed gas cylinders. All calibration gases shall be traceable to National Institute of Standards and Testing (NIST) standards and shall be certified by the manufacturer to ± 1 percent of the tag value. Additionally, the manufacturer of the cylinder should provide a recommended shelf life for each calibration gas cylinder over which the concentration does not change more than ± 2 percent from the certified value. For calibration gas values not generally available, alternative methods for preparing calibration gas mixtures, such as dilution systems, may be used with prior approval.

2.1.9.1 Fuel. A 40 percent H_2/60 percent He or 40 percent H_2/60 percent N_2 gas mixture is recommended to avoid an oxygen synergism effect that reportedly occurs when oxygen concentration varies significantly from a mean value.

2.1.9.2 Carrier Gas and Dilution Air Supply. High-purity air with less than 1 ppm of organic material (as propane or carbon equivalent) or less than 0.1 percent of the span value, whichever is greater.

2.1.9.3 FIA Linearity Calibration Gases. Low-, mid-, and high-range gas mixture standards with nominal propane concentrations of 20-30, 45-55, and 70-80 percent of the span value in air, respectively. Other calibration values and other span values may be used if it can be shown that more accurate measurements would be achieved.

2.1.9.4 Dilution Check Gas. Gas mixture standard containing propane in air, approximately half the span value after dilution.

2.1.10 Particulate Filter. An in-stack or an out-of-stack glass fiber filter is recommended if exhaust gas particulate loading is significant. An out-of-stack filter must be heated to prevent any condensation unless it can

be demonstrated that no condensation occurs.

2.2 Captured Emissions Volumetric Flow Rate.

2.2.1 Method 2 or 2A Apparatus. For determining volumetric flow rate.

2.2.2 Method 3 Apparatus and Reagents. For determining molecular weight of the gas stream. An estimate of the molecular weight of the gas stream may be used if it can be justified.

2.2.3 Method 4 Apparatus and Reagents. For determining moisture content, if necessary.

3. DETERMINATION OF VOLUMETRIC FLOW RATE OF CAPTURED EMISSIONS

3.1 Locate all points where emissions are captured from the affected facility. Using Method 1, determine the sampling points. Be sure to check each site for cyclonic or swirling flow.

3.2 Measure the velocity at each sampling site at least once every hour during each sampling run using Method 2 or 2A.

4. DETERMINATION OF VOC CONTENT OF CAPTURED EMISSIONS

4.1 Analysis Duration. Measure the VOC responses at each captured emissions point during the entire test run or, if applicable, while the process is operating. If there are a multiple captured emissions locations, design a sampling system to allow a single FIA to be used to determine the VOC responses at all sampling locations.

4.2 Gas VOC Concentration.

4.2.1 Assemble the sample train as shown in Figure G.2-1. Calibrate the FIA according to the procedure in Section 5.1.

4.2.2 Set the dilution ratio and determine the dilution factor according to the procedure in Section 5.3.

4.2.3 Conduct a system check according to the procedure in Section 5.4.

4.2.4 Install the sample probe so that the probe is centrally located in the stack, pipe, or duct and is sealed tightly at the stack port connection.

4.2.5 Inject zero gas at the calibration valve assembly. Measure the system response time as the time required for the system to reach the effluent concentration after the calibration valve has been returned to the effluent sampling position.

4.2.6 Conduct a system check before and a system drift check after each sampling run according to the procedures in Sections 5.2 and 5.4. If the drift check following a run indicates unacceptable performance, the run is not valid. The tester may elect to perform system drift checks during the run not to exceed one drift check per hour.

4.2.7 Verify that the sample lines, filter, and pump temperatures are 120 ± 5°C.

4.2.8 Begin sampling at the start of the test period and continue to sample during the entire run. Record the starting and ending times and any required process information as appropriate. If multiple captured emission locations are sampled using a single FIA, sample at each location for the same amount of time (e.g., 2 min) and continue to switch from one location to another for the entire test run. Be sure that total sampling time at each location is the same at the end of the test run. Collect at least four separate measurements from each sample point during each hour of testing. Disregard the measurements at each sampling location until two times the response time of the measurement system has elapsed. Continue sampling for at least 1 min and record the concentration measurements.

4.3 Background Concentration.

4.3.1 Locate all NDOs of the TTE. A sampling point shall be centrally located outside of the TTE at four equivalent diameters from each NDO, if possible. If there are more than six NDOs, choose six sampling points evenly spaced among the NDOs.

4.3.2 Assemble the sample train as shown in Figure G.2-2. Calibrate the FIA and conduct a system check according to the procedures in Sections 5.1 and 5.4.

4.3.3 Position the probe at the sampling location.

4.3.4 Determine the response time, conduct the system check and sample according to the procedures described in Sections 4.2.4 to 4.2.8.

4.4 Alternative Procedure. The direct interface sampling and analysis procedure described in Section 7.2 of Method 18 may be used to determine the gas VOC concentration. The system must be designed to collect and analyze at least one sample every 10 min.

5. CALIBRATION AND QUALITY ASSURANCE

5.1 FIA Calibration and Linearity Check. Make necessary adjustments to the air and fuel supplies for the FIA and ignite the burner. Allow the FIA to warm up for the period recommended by the manufacturer. Inject a calibration gas into the measurement system after the dilution system and adjust the back-pressure regulator to the value required to achieve the flow rates specified by the manufacturer. Inject the zero- and the high-range calibration gases and adjust the analyzer calibration to provide the proper responses. Inject the low- and mid-range gases and record the responses of the measurement system. The calibration and linearity of the system are acceptable if the responses for all four gases are within 5 percent of the respective gas values. If the performance of the system is not acceptable, repair or adjust the system and repeat the linearity check. Conduct a calibration and linearity check after assembling the analysis system and after a major change is made to the system.

5.2 Systems Drift Checks. Select the calibration gas that most closely approximates the concentration of the diluted captured emissions for conducting the drift checks. Introduce the zero and calibration gas at the calibration valve assembly and verify that the appropriate gas flow rate and pressure are present at the FIA. Record the measurement system responses to the zero and calibration gases. The performance of the system is acceptable if the difference between the drift check measurement and the value obtained in Section 5.1 is less than 3 percent of the span value. Conduct the system drift check at the end of each run.

5.3 Determination of Dilution Factor. Inject the dilution check gas into the measurement system before the dilution system and record the response. Calculate the dilution factor using Equation 3.

5.4 System Check. Inject the high-range calibration gas at the inlet to the sampling probe while the dilution air is turned off. Record the response. The performance of the system is acceptable if the measurement system response is within 5 percent of the value obtained in Section 5.1 for the high range calibration gas. Conduct a system check before and after each test run.

5.5 Analysis Audit. Immediately before each test, analyze an audit cylinder as described in Section 5.2. The analysis audit must agree with the audit cylinder concentration within 10 percent.

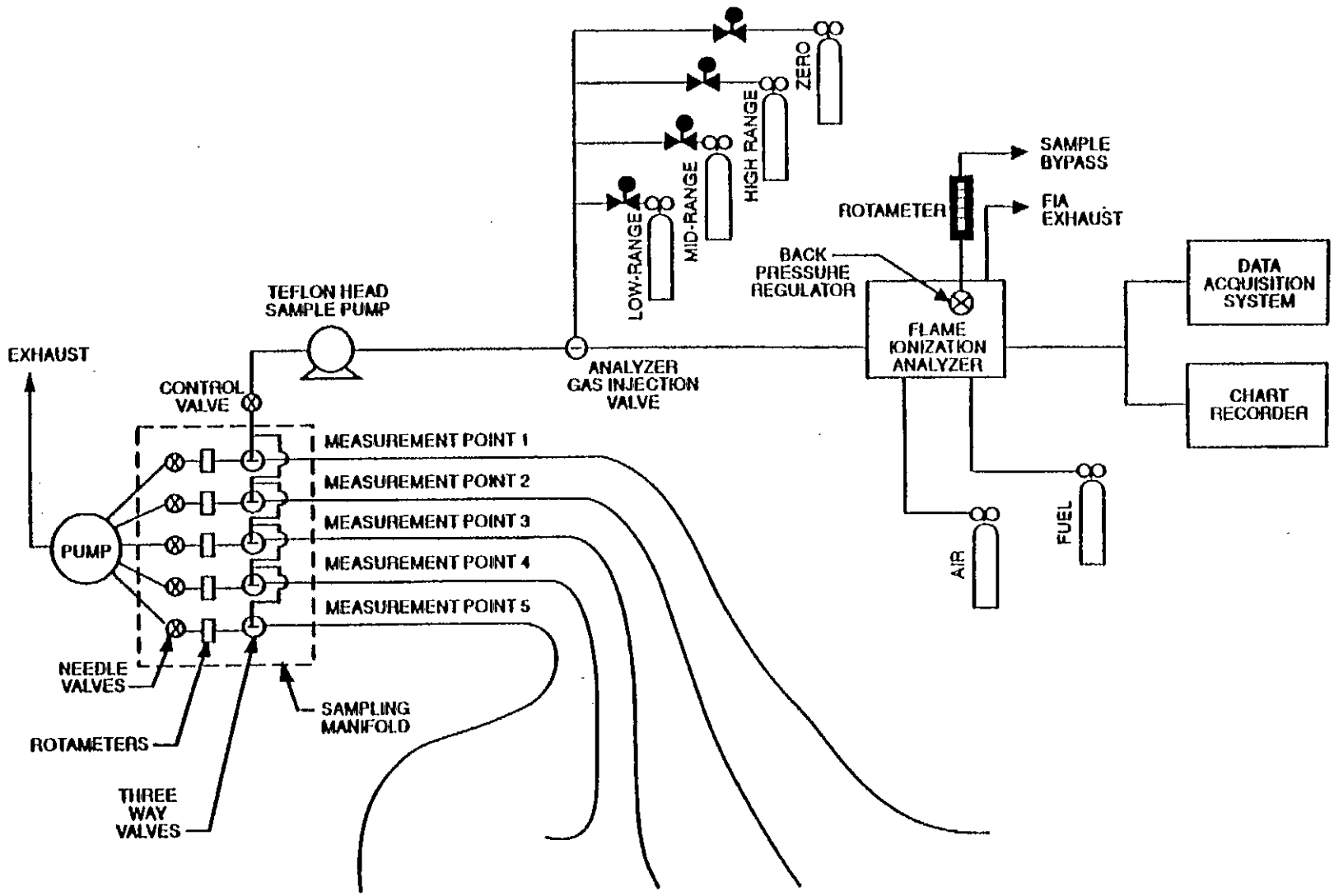

Figure G.2-2 Background Measurement System

6. NOMENCLATURE

A_i = area of NDO i, square feet (ft^2).
A_N = total area of all NDOs in the enclosure, ft^2.
C_A = actual concentration of the dilution check gas, ppm propane.
C_{Bi} = corrected average VOC concentration of background emissions at point i, ppm propane.
C_B = average background concentration, ppm propane.
C_{DH} = average measured concentration for the drift check calibration gas, ppm propane.
C_{DO} = average system drift check concentration for zero concentration gas, ppm propane.
C_H = actual concentration of the drift check calibration gas, ppm propane.
C_i = uncorrected average background VOC concentration measured at point i, ppm propane.
C_j = uncorrected average VOC concentration measured at point j, ppm propane.
C_M = measured concentration of the dilution check gas, ppm propane.
DF = dilution factor.
G = total VOC content of captured emissions, kilograms (kg).
K_1 = 1.830×10^{-6} kilograms per cubic meter - parts per million (kg/[m^3-ppm]).
n = number of measurement points.
Q_{Gj} = average effluent volumetric flow rate corrected to standard conditions at captured emissions point j, cubic meters per minute (m^3/min).
θ_C = total duration of capture efficiency sampling run, min.

7. CALCULATIONS

7.1 Total VOC Captured Emissions.

$$G = \sum_{j=1}^{n} C_{Gj} \, Q_{Gj} \, \theta_C \, K_1$$

7.2 VOC Concentration of the Captured Emissions at Point j.

$$C_{Gj} = DF \left(C_j - C_{DO}\right) \frac{C_H}{C_{DH} - C_{DO}}$$

7.3 Dilution Factor.

$$DF = \frac{C_A}{C_M}$$

7.4 Background VOC Concentration at Point i.

$$C_{Bi} = \left(C_i - C_{DO}\right) \frac{C_H}{C_{DH} - C_{DO}}$$

7.5 Average Background Concentration.

$$C_B = \frac{\sum_{i=1}^{n} C_{Bi} A_i}{A_N}$$

NOTE: If the concentration at each point is within 20 percent of the average concentration of all points, the simple average concentration may be used:

$$C_B = \frac{\sum_{i=1}^{n} C_{Bi}}{n}$$

Procedure L - VOC Input

1. INTRODUCTION

1.1 Applicability. This procedure is applicable for determining the input of volatile organic compounds (VOC). It is intended to be used as a segment in the development of liquid/gas protocols for determining VOC capture efficiency (CE) for surface coating and printing operations.

1.2 Principle. The amount of VOC introduced to the process (L) is the sum of the products of the weight (W) of each VOC containing liquid (ink, paint, solvent, etc.) used and its VOC content (V). A sample of each VOC containing liquid is analyzed with a flame ionization analyzer (FIA) to determine V.

1.3 Estimated Measurement Uncertainty. The measurement uncertainties are estimated for each VOC containing liquid as follows: W = ±2.0 percent and V = ±12.0 percent. Based on these numbers, the probable uncertainty for L is estimated at about ±12.2 percent for each VOC containing liquid.

1.4 Sampling Requirements. A capture efficiency test shall consist of at least three sampling runs. The sampling time for each run should be at least 8 hours, unless otherwise approved.

1.5 Notes. Because this procedure is often applied in highly explosive areas, caution and care should be exercised in choosing appropriate equipment and installing and using the equipment. Mention of trade names or company products does not constitute endorsement. All gas concentrations (percent, parts per million [ppm]) are by volume, unless otherwise noted.

2. APPARATUS AND REAGENTS

2.1 Liquid Weight.

2.1.1 Balances/Digital Scales. To weigh drums of VOC containing liquids to within 0.2 pound (lb).

2.1.2 Volume Measurement Apparatus (Alternative). Volume meters, flow meters, density measurement equipment, etc., as needed to achieve same accuracy as direct weight measurements.

2.2 VOC Content (Flame Ionization Analyzer Technique). The liquid sample analysis system is shown in Figures L-1 and L-2. The following equipment is required:

2.2.1 Sample Collection Can. An appropriately sized metal can to be used to collect VOC containing materials. The can must be constructed in such a way that it can be grounded to the coating container.

2.2.2 Needle Valves. To control gas flow.

2.2.3 Regulators. For carrier gas and calibration gas cylinders.

2.2.4 Tubing. Teflon or stainless steel tubing with diameters and lengths determined by connection requirements of equipment. The tubing between the sample oven outlet and the FIA shall be heated to maintain a temperature of 120 ± 5°C.

2.2.5 Atmospheric Vent. A tee and 0- to 0.5-liters per minute (L/min) rotameter placed in the sampling line between the carrier gas cylinder and the VOC sample vessel to release the excess carrier gas. A toggle valve placed between the tee and the rotameter facilitates leak tests of the analysis system.

2.2.6 Thermometer. Capable of measuring the temperature of the hot water bath to within 1°C.

2.2.7 Sample Oven. Heated enclosure, containing calibration gas coil heaters, critical orifice, aspirator, and other liquid sample analysis components, capable of maintaining a temperature of 120 ± 5°C.

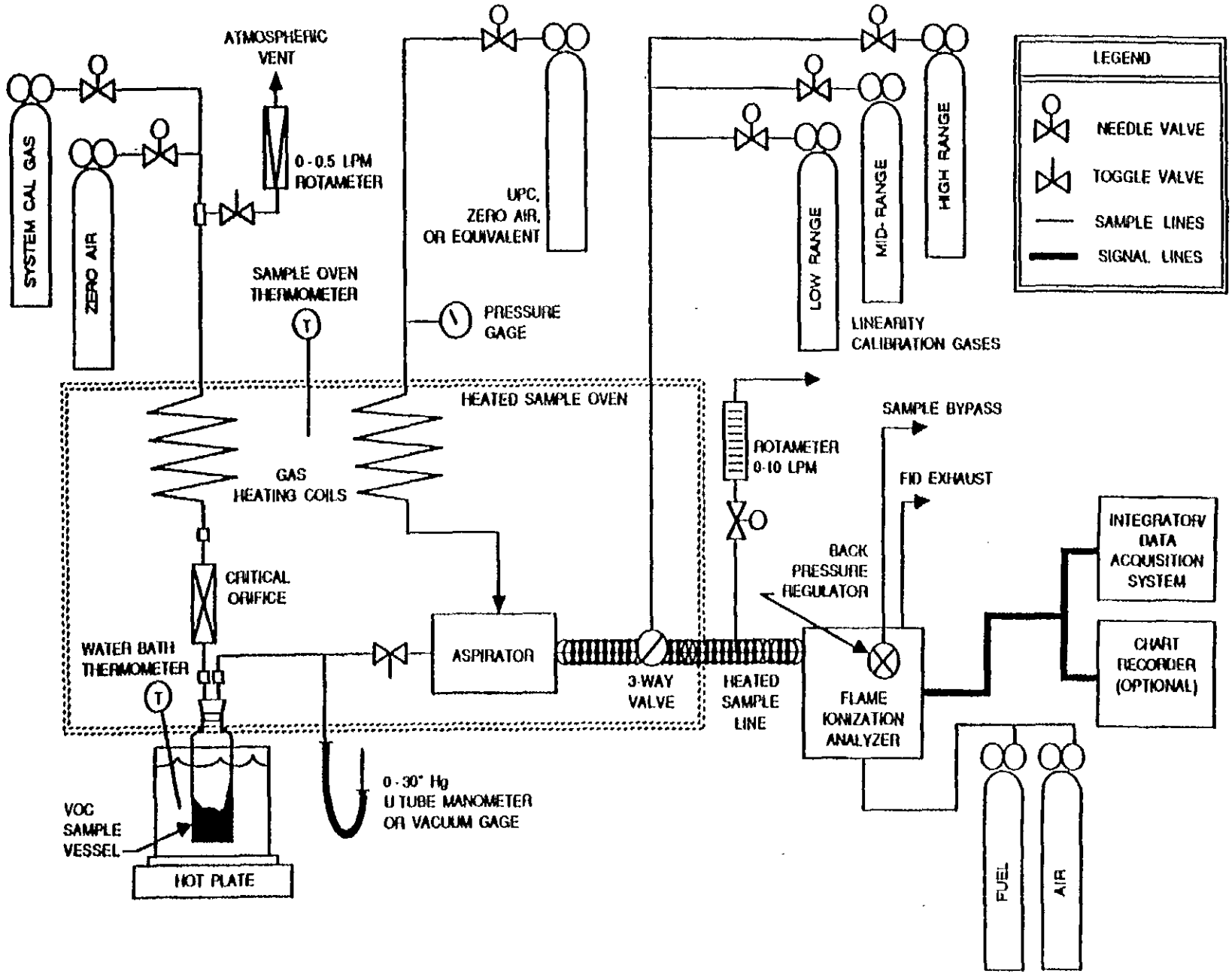

Figure L-1 Liquid Analysis Sample System

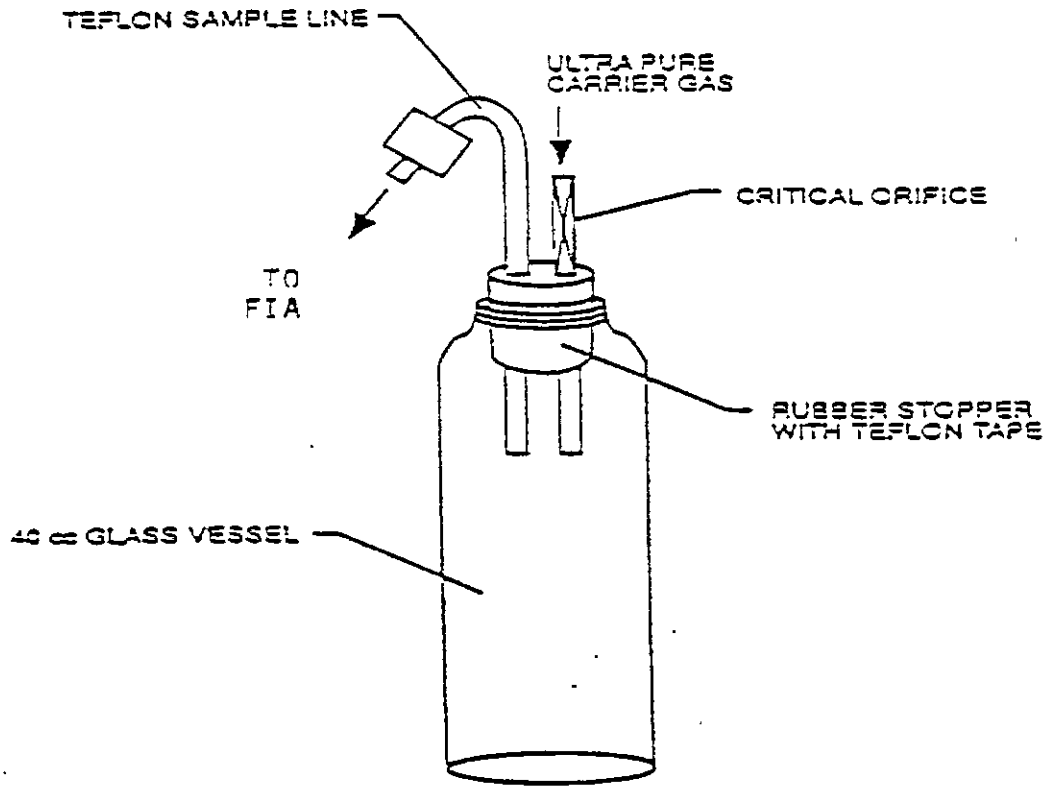

Figure L-2 VOC Sampling Vessel

2.2.8 Gas Coil Heaters. Sufficient lengths of stainless steel or Teflon tubing to allow zero and calibration gases to be heated to the sample oven temperature before entering the critical orifice or aspirator.

2.2.9 Water Bath. Capable of heating and maintaining a sample vessel temperature of 100 ± 5°C.

2.2.10 Analytical Balance. To measure ±0.001 g.

2.2.11 Disposable Syringes. 2 cubic centimeters (cc) or 5 cc.

2.2.12 Sample Vessel. Glass, 40-ml septum vial. A separate vessel is needed for each sample.

2.2.13 Rubber Stopper. Two-hole stopper to accommodate 3.2 millimeters (mm) (0.125 inches [in]) Teflon tubing, appropriately sized to fit the opening of the sample vessel. The rubber stopper should be wrapped in Teflon tape to provide a tighter seal and to prevent any reaction of the sample with the rubber stopper. Alternatively, any leak-free closure fabricated of nonreactive materials and accommodating the necessary tubing fittings may be used.

2.2.14 Critical Orifices. Calibrated critical orifices capable of providing constant flow rates from 50 to 250 milliliters per minute (ml/min) at known pressure drops. Sapphire orifice assemblies (available from O'Keefe Controls Company) and glass capillary tubing have been found to be adequate for this application.

2.2.15 Vacuum Gauge. 0- to 760-millimeters of Mercury (mm Hg) (0- to 30-inches of Mercury [in Hg) U-Tube manometer or vacuum gauge.

2.2.16 Pressure Gauge. Bourdon gauge capable of measuring the maximum air pressure at the aspirator inlet (e.g., 690 kiloPascals [kPa], 100 pounds per square inch gauge [psig]).

2.2.17 Aspirator. A device capable of generating sufficient vacuum at the sample vessel to create critical flow through the calibrated orifice when sufficient air pressure is present at the aspirator inlet. The aspirator must also provide sufficient sample pressure to operate the FIA. The sample is also mixed with the dilution gas within the aspirator.

2.2.18 Soap Bubble Meter. Of an appropriate size to calibrate the critical orifices in the system.

2.2.19 Organic Concentration Analyzer. An FIA with a span value of 1.5 times the expected concentration as propane; however, other span values may be used if it can be demonstrated that they would provide more accurate measurements. The system shall be capable of meeting or exceeding the following specifications:

2.2.19.1 Zero Drift. Less than ±3.0 percent of the span value.

2.2.19.2 Calibration Drift. Less than ±3.0 percent of span value.

2.2.19.3 Calibration Error. Less than ±5.0 percent of the calibration gas value.

2.2.20 Integrator/Data Acquisition System. An analog or digital device or computerized data acquisition system used to integrate the FIA response or compute the average response and record measurement data. The minimum data sampling frequency for computing average or integrated values is one measurement value every 5 seconds (sec). The device shall be capable of recording average values at least once per minute (min).

2.2.21 Chart Recorder (Optional). A chart recorder or similar device is recommended to provide a continuous analog display of the measurement results during the liquid sample analysis.

2.2.22 Calibration and Other Gases. For calibration, fuel, and combustion air (if required) contained in compressed gas cylinders. All calibration gases shall be traceable to National Institute of Standards and Testing (NIST) standards and shall be certified by the manufacturer to ±1 percent of the tag value. Additionally, the manufacturer of the cylinder should provide a recommended shelf life for each calibration gas cylinder over

which the concentration does not change more than ±2 percent from the certified value. For calibration gas values not generally available, alternative methods for preparing calibration gas mixtures, such as dilution systems, may be used with prior approval.

2.2.22.1 Fuel. A 40 percent H_2/60 percent He or 40 percent H_2/60 percent N_2 gas mixture is recommended to avoid an oxygen synergism effect that reportedly occurs when oxygen concentration varies significantly from a mean value.

2.2.22.2 Carrier Gas. High purity air with less than 1 ppm of organic material (as propane) or less than 0.1 percent of the span value, whichever is greater.

2.2.22.3 FIA Linearity Calibration Gases. Low-, mid-, and high-range gas mixture standards with nominal propane concentrations of 20-30, 45-55, and 70-80 percent of the span value in air, respectively. Other calibration values and other span values may be used if it can be shown that more accurate measurements would be achieved.

2.2.22.4 System Calibration Gas. Gas mixture standard containing propane in air, approximating the undiluted VOC concentration expected for the liquid samples.

3. DETERMINATION OF LIQUID INPUT WEIGHT

3.1 Weight Difference. Determine the amount of material introduced to the process as the weight difference of the feed material before and after each sampling run. In determining the total VOC containing liquid usage, account for: (a) the initial (beginning) VOC containing liquid mixture; (b) any solvent added during the test run; (c) any coating added during the test run; and (d) any residual VOC containing liquid mixture remaining at the end of the sample run.

3.1.1 Identify all points where VOC-containing liquids are introduced to the process. To obtain an accurate measurement of VOC-containing liquids, start with an empty fountain (if applicable). After completing the run, drain the liquid in the fountain back into the liquid drum (if possible), and weigh the drum again. Weigh the VOC-containing liquids to ±0.5 percent of the total weight (full) or ±0.1 percent of the total weight of VOC-containing liquid used during the sample run, whichever is less. If the residual liquid cannot be returned to the drum, drain the fountain into a pre-weighed empty drum to determine the final weight of the liquid.

3.1.2 If it is not possible to measure a single representative mixture, then weigh the various components separately (e.g., if solvent is added during the sampling run, weigh the solvent before it is added to the mixture). If a fresh drum of VOC containing liquid is needed during the run, then weigh both the empty drum and fresh drum.

3.2 Volume Measurement (Alternative). If direct-weight measurements are not feasible, the tester may use volume meters and flow rate meters (and density measurements) to determine the weight of liquids used if it can be demonstrated that the technique produces results equivalent to the direct- weight measurements. If a single representative mixture cannot be measured, measure the components separately.

4. DETERMINATION OF VOC CONTENT IN INPUT LIQUIDS

4.1 Collection of Liquid Samples.

4.1.1 Collect a 100-ml or larger sample of the VOC-containing liquid mixture at each application location at the beginning and end of each test run. A separate sample should be taken of each VOC containing liquid added

to the application mixture during the test run. If a fresh drum is needed during the sampling run, then obtain a sample from the fresh drum.

4.1.2 When collecting the sample, ground the sample container to the coating drum. Fill the sample container as close to the rim as possible to minimize the amount of headspace.

4.1.3 After the sample is collected, seal the container so the sample cannot leak out or evaporate.

4.1.4 Label the container to identify clearly the contents.

4.2 Liquid Sample VOC Content.

4.2.1 Assemble the liquid VOC content analysis system as shown in Figure L-1.

4.2.2 Permanently identify all of the critical orifices that may be used. Calibrate each critical orifice under the expected operating conditions (i.e., sample vacuum and temperature) against a volume meter as described in Section 5.3.

4.2.3 Label and tare the sample vessels (including the stoppers and caps) and the syringes.

4.2.4 Install an empty sample vessel and perform a leak test of the system. Close the carrier gas valve and atmospheric vent and evacuate the sample vessel to 250 mm Hg (10 in Hg) absolute or less using the aspirator. Close the toggle valve at the inlet to the aspirator and observe the vacuum for at least one minute. If there is any change in the sample pressure, release the vacuum, adjust or repair the apparatus as necessary, and repeat the leak test.

4.2.5 Perform the analyzer calibration and linearity checks according to the procedure in Section 5.1. Record the responses to each of the calibration gases and the back-pressure setting of the FIA.

4.2.6 Establish the appropriate dilution ratio by adjusting the aspirator air supply or substituting critical orifices. Operate the aspirator at a vacuum of at least 25 mm Hg (1 in Hg) greater than the vacuum necessary to achieve critical flow. Select the dilution ratio so that the maximum response of the FIA to the sample does not exceed the high-range calibration gas.

4.2.7 Perform system calibration checks at two levels by introducing compressed gases at the inlet to the sample vessel while the aspirator and dilution devices are operating. Perform these checks using the carrier gas (zero concentration) and the system calibration gas. If the response to the carrier gas exceeds ± 0.5 percent of span, clean or repair the apparatus and repeat the check. Adjust the dilution ratio as necessary to achieve the correct response to the upscale check, but do not adjust the analyzer calibration. Record the identification of the orifice, aspirator air supply pressure, FIA back-pressure, and the responses of the FIA to the carrier and system calibration gases.

4.2.8 After completing the above checks, inject the system calibration gas for approximately 10 min. Time the exact duration of the gas injection using a stopwatch. Determine the area under the FIA response curve and calculate the system response factor based on the sample gas flow rate, gas concentration, and the duration of the injection as compared to the integrated response using Equations 2 and 3.

4.2.9 Verify that the sample oven and sample line temperatures are 120 $\pm$ 5°C and that the water bath temperature is 100° $\pm$ 5°C.

4.2.10 Fill a tared syringe with approximately 1 gram (g) of the VOC-containing liquid and weigh it. Transfer the liquid to a tared sample vessel. Plug the sample vessel to minimize sample loss. Weigh the sample vessel containing the liquid to determine the amount of sample actually received. Also, as a quality control check,

weigh the empty syringe to determine the amount of material delivered. The two coating sample weights should agree within ±0.02 g. If not, repeat the procedure until an acceptable sample is obtained.

4.2.11 Connect the vessel to the analysis system. Adjust the aspirator supply pressure to the correct value. Open the valve on the carrier gas supply to the sample vessel and adjust it to provide a slight excess flow to the atmospheric vent. As soon as the initial response of the FIA begins to decrease, immerse the sample vessel in the water bath. (Applying heat to the sample vessel too soon may cause the FIA response to exceed the calibrated range of the instrument, and thus invalidate the analysis.)

4.2.12 Continuously measure and record the response of the FIA until all of the volatile material has been evaporated from the sample and the instrument response has returned to the baseline (i.e., response less than 0.5 percent of the span value). Observe the aspirator supply pressure, FIA back-pressure, atmospheric vent, and other system operating parameters during the run; repeat the analysis procedure if any of these parameters deviate from the values established during the system calibration checks in Section 4.2.7. After each sample perform the drift check described in Section 5.2. If the drift check results are acceptable, calculate the VOC content of the sample using the equations in Section 7. Integrate the area under the FIA response curve, or determine the average concentration response and the duration of sample analysis.

5. CALIBRATION AND QUALITY ASSURANCE

5.1 FIA Calibration and Linearity Check. Make necessary adjustments to the air and fuel supplies for the FIA and ignite the burner. Allow the FIA to warm up for the period recommended by the manufacturer. Inject a calibration gas into the measurement system and adjust the back-pressure regulator to the value required to achieve the flow rates specified by the manufacturer. Inject the zero- and the high-range calibration gases and adjust the analyzer calibration to provide the proper responses. Inject the low- and mid-range gases and record the responses of the measurement system. The calibration and linearity of the system are acceptable if the responses for all four gases are within 5 percent of the respective gas values. If the performance of the system is not acceptable, repair or adjust the system and repeat the linearity check. Conduct a calibration and linearity check after assembling the analysis system and after a major change is made to the system.

5.2 Systems Drift Checks. After each sample, repeat the system calibration checks in Section 4.2.7 before any adjustments to the FIA or measurement system are made. If the zero or calibration drift exceeds ±3 percent of the span value, discard the result and repeat the analysis.

5.3 Critical Orifice Calibration.

5.3.1 Each critical orifice must be calibrated at the specific operating conditions that it will be used. Therefore, assemble all components of the liquid sample analysis system as shown in Figure L-3. A stopwatch is also required.

5.3.2 Turn on the sample oven, sample line, and water bath heaters and allow the system to reach the proper operating temperature. Adjust the aspirator to a vacuum of 380 mm Hg (15 in Hg). Measure the time required for one soap bubble to move a known distance and record barometric pressure.

5.3.3 Repeat the calibration procedure at a vacuum of 406 mm Hg (16 in Hg) and at 25-mm Hg (1-in Hg) intervals until three consecutive determinations provide the same flow rate. Calculate the critical flow rate for the orifice in ml/min at standard conditions. Record the vacuum necessary to achieve critical flow.

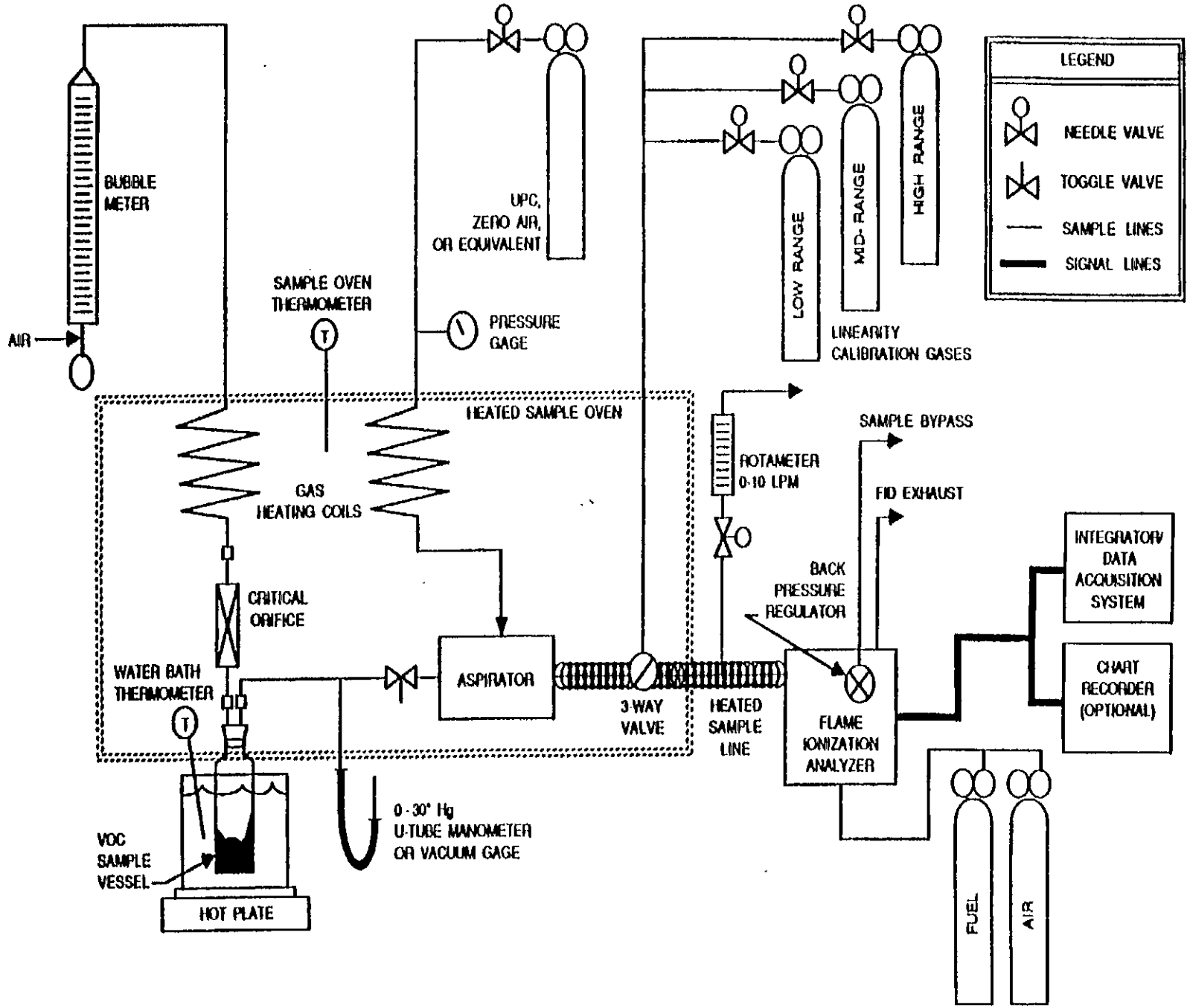

Figure L-3 Critical Orifice Calibration Apparatus

6. NOMENCLATURE

A_L	=	area under the response curve of the liquid sample, area count.
A_S	=	area under the response curve of the calibration gas, area count.
C_S	=	actual concentration of system calibration gas, ppm propane.
K	=	1.830×10^{-9} grams per milliliter - parts per million (g/(ml-ppm).
L	=	total VOC content of liquid input, kilograms (kg).
M_L	=	mass of liquid sample delivered to the sample vessel, grams (g).
q	=	flow rate through critical orifice, milliliters per minute (ml/min).
RF	=	liquid analysis system response factor, grams per area count.
θ_S	=	total gas injection time for system calibration gas during integrator calibration, min.
V_{Fj}	=	final VOC fraction of VOC containing liquid j.
V_{Ij}	=	initial VOC fraction of VOC containing liquid j.
V_{Aj}	=	VOC fraction of VOC containing liquid j added during the run.
V	=	VOC fraction of liquid sample.
W_{Fj}	=	weight of VOC containing liquid j remaining at end of the run, kg.
W_{Ij}	=	weight of VOC containing liquid j at beginning of the run, kg.
W_{Aj}	=	weight of VOC containing liquid j added during the run, kg.

7. CALCULATIONS

7.1 Total VOC Content of the Input VOC Containing Liquid.

$$L = \sum_{j=1}^{n} V_I W_I - \sum_{j=1}^{n} V_{Fj} W_{Fj} + \sum_{j=1}^{n} V_{Aj} W_{Aj}$$

7.2 Liquid Sample Analysis System Response Factor for Systems Using Integrators, Grams/Area Counts.

$$RF = \frac{C_S \, q \, \theta_S \, K}{A_S}$$

7.3 VOC Content of the Liquid Sample.

$$V = \frac{A_L \, R \, F}{M_L}$$

Procedure T - Criteria for and Verification of a Permanent or Temporary Total Enclosure

1. INTRODUCTION

1.1 Applicability. This procedure is used to determine whether a permanent or temporary enclosure meets the criteria of a total enclosure.

1.2 Principle. An enclosure is evaluated against a set of criteria. If the criteria are met and if all the exhaust gases are ducted to a control device, then the volatile organic compounds (VOCs) capture efficiency (CE) is assumed to be 100 percent and CE need not be measured. However, if part of the exhaust gas stream is not ducted to a control device, CE must be determined.

2. DEFINITIONS

2.1 Natural Draft Opening (NDO) – Any permanent opening in the enclosure that remains open during operation of the facility and is not connected to a duct in which a fan is installed.

2.2 Permanent Total Enclosure (PTE) – A permanently installed enclosure that completely surrounds a source of emissions such that all VOC emissions are captured and contained for discharge through a control device.

2.3 Temporary Total Enclosure (TTE) – A temporarily installed enclosure that completely surrounds a source of emissions such that all VOC emissions are captured and contained for discharge through ducts that allow for the accurate measurement of VOC rates.

3. CRITERIA OF A TEMPORARY TOTAL ENCLOSURE

3.1 Any NDO shall be at least 4 equivalent opening diameters from each VOC emitting point.

3.2 Any exhaust point from the enclosure shall be at least 4 equivalent duct or hood diameters from each NDO.

3.3 The total area of all NDOs shall not exceed 5 percent of the surface area of the enclosure's four walls, floor, and ceiling.

3.4 The average facial velocity (FV) of air through all NDOs shall be at least 3,600 meters per hour (m/hr) (200 feet per minute [fpm]). The direction of air through all NDOs shall be into the enclosure.

3.5 All access doors and windows whose areas are not included in Section 3.3 and are not included in the calculation in Section 3.4 shall be closed during routine operation of the process.

4. CRITERIA OF A PERMANENT TOTAL ENCLOSURE

4.1 Same as Sections 3.1 and 3.3 - 3.5.

4.2 All VOC emissions must be captured and contained for discharge through a control device.

5. PROCEDURE

5.1 Determine the equivalent diameters of the NDOs and determine the distances from each VOC-emitting point to all NDOs. Determine the equivalent diameter of each exhaust duct or hood and its distance to all NDOs. Calculate the distances in terms of equivalent diameters. The number of equivalent diameters shall be at least four.

5.2 Measure the total area (A_t) of the enclosure and the total area (A_N) of all NDOs of the enclosure. Calculate

the NDO to enclosure area ratio (NEAR) as follows:

$$NEAR = \frac{A_N}{A_t}$$

The NEAR must be ≤0.05.

5.3 Measure the volumetric flow rate, corrected to standard conditions, of each gas stream exiting the enclosure through an exhaust duct or hood using EPA Method 2. In some cases (e.g., when the building is the enclosure), it may be necessary to measure the volumetric flow rate, corrected to standard conditions, of each gas stream entering the enclosure through a forced makeup air duct using Method 2. Calculate FV using the following equation:

$$FV = \frac{Q_O - Q_I}{A_N}$$

where:

Q_O = the sum of the volumetric flow from all gas streams exiting the enclosure through an exhaust duct or hood.

Q_I = the sum of the volumetric flow from all gas streams into the enclosure through a forced makeup air duct; zero, if there is no forced makeup air into the enclosure.

A_N = total area of all NDOs in enclosure.

The FV shall be at least 3,600 m/hr (200 fpm).

5.4 Verify that the direction of air flow through all NDOs is inward. Use streamers, smoke tubes, tracer gases, etc. Strips of plastic wrapping film have been found to be effective. Monitor the direction of air flow at intervals of at least 10 minutes (min) for at least 1 hour (hr).

6. QUALITY ASSURANCE

6.1 The success of this protocol lies in designing the TTE to simulate the conditions that exist without the TTE; i.e., the effect of the TTE on the normal flow patterns around the affected facility or the amount of fugitive VOC emissions should be minimal. The TTE must enclose the application stations, coating reservoirs, and all areas from the application station to the oven. The oven does not have to be enclosed if it is under negative pressure. The NDOs of the temporary enclosure and a fugitive exhaust fan must be properly sized and placed.

6.2. Estimate the ventilation rate of the TTE that best simulates the conditions that exist without the TTE; i.e., the effect of the TTE on the normal flow patterns around the affected facility or the amount of fugitive VOC emissions should be minimal. Figure T-1 may be used as an aid. Measure the concentration (C_G) and flow rate (Q_G) of the captured gas stream, specify a safe concentration (C_F) for the fugitive gas stream, estimate the CE, and then use the plot in Figure T-1 to determine the volumetric flow rate of the fugitive gas stream (Q_F).

A fugitive VOC emission exhaust fan that has a variable flow control is desirable.

6.2.1 Monitor the concentration of VOC into the capture device without the TTE. To minimize the effect of temporal variation on the captured emissions, the baseline measurement should be made over as long a time period as practical. However, the process conditions must be the same for the measurement in Section 6.2.3 as they are for this baseline measurement. This may require short measuring times for this quality control check before and after the construction of the TTE.

6.2.2 After the TTE is constructed, monitor the VOC concentration inside the TTE. This concentration shall not continue to increase and must not exceed the safe level according to US Occupational Safety and Health Administration (OSHA) requirements for permissible exposure limits. An increase in VOC concentration indicates poor TTE design or poor capture efficiency.

6.2.3 Monitor the concentration of VOC into the capture device with the TTE. To limit the effect of the TTE on the process, the VOC concentration with and without the TTE must be within ± 10 percent. If the measurements do not agree, adjust the ventilation rate from the TTE until they agree within 10 percent.

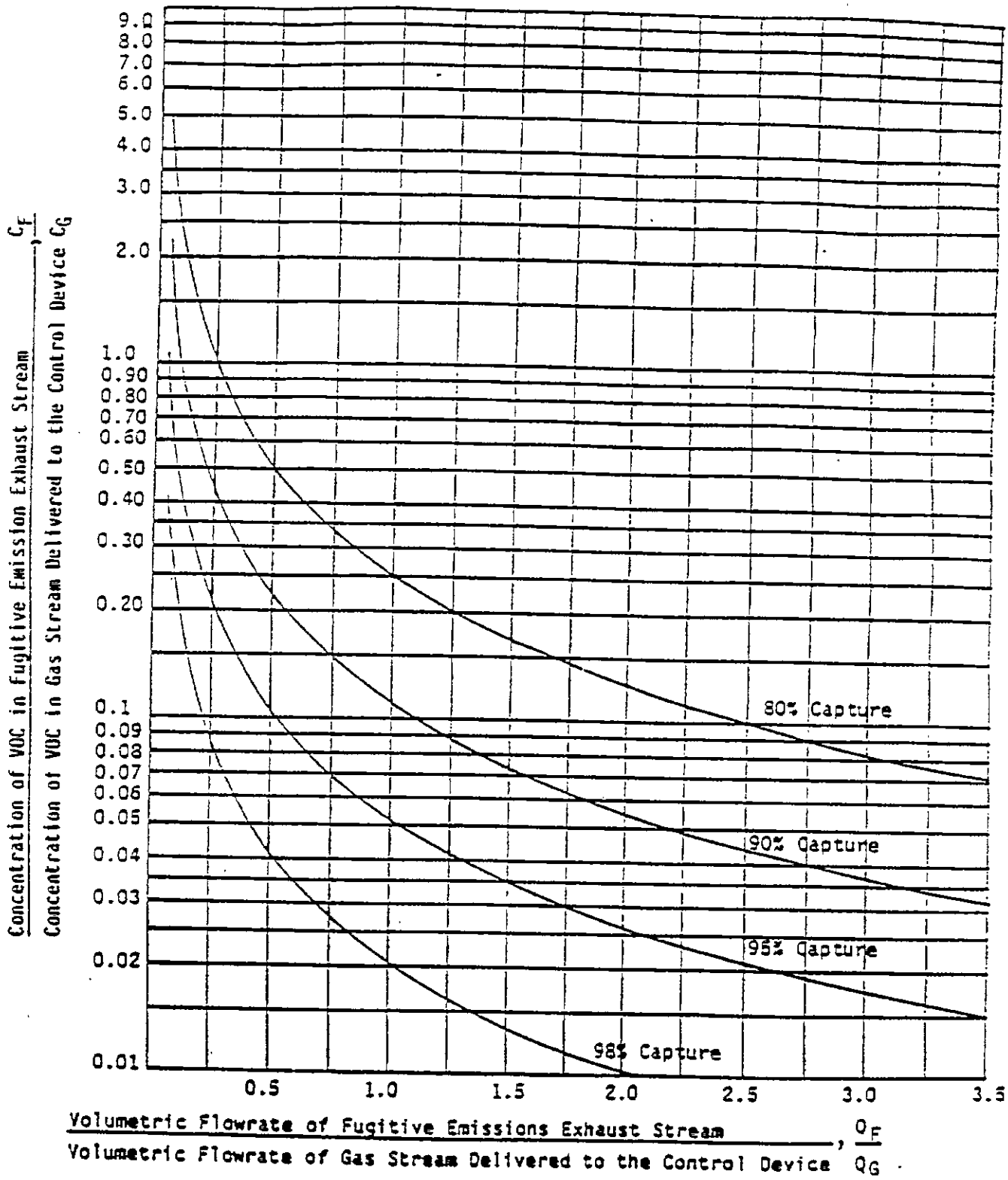

Figure T-1 The Crumpler Chart

60 E4

H. B. 4309

(By Delegates Douglas, Gallagher, Faircloth, Compton, Linch and Riggs)

(Introduced January 29, 1996; referred to the Committee on the Judiciary.)

45-21

A BILL to amend and reenact section one, article three, chapter sixty-four of the code of West Virginia, one thousand nine hundred thirty-one, as amended, relating to authorizing the division of environmental protection to promulgate legislative rules relating to the prevention and control of air pollution from the emission of volatile organic compounds.

Be it enacted by the Legislature of West Virginia:

That section one, article three, chapter sixty-four of the code of West Virginia, one thousand nine hundred thirty-one, as amended, be amended and reenacted, to read as follows:

ARTICLE 3. AUTHORIZATION FOR BUREAU OF ENVIRONMENT TO PROMULGATE LEGISLATIVE RULES.

§64-3-1. Division of environmental protection.

4309

(a) The legislative rules filed in the state register on the twelfth day of August, one thousand nine hundred ninety-four, authorized under the authority of section four, article five, chapter twenty-two, of this code, modified by the division of environmental protection to meet the objections of the legislative rule-making review committee and refiled in the state register on the twenty-third day of November, one thousand nine hundred ninety-four, relating to the division of environmental protection (requirements for determining conformity of general federal actions to applicable air quality implementation plans (general conformity), 45 CSR 35), are authorized.

(b) The legislative rules filed in the state register on the twelfth day of August, one thousand nine hundred ninety-four, authorized under the authority of section four, article five, chapter twenty-two, of this code, modified by the division of environmental protection to meet the objections of the legislative rule-making review committee and refiled in the state register on the twenty-third day of November, one thousand nine hundred ninety-four, relating to the division of environmental protection (emission standards for hazardous air pollutants pursuant to 40 CFR Part 63, 45 CSR 34), are authorized.

(c) The legislative rules filed in the state register on the twelfth day of August, one thousand nine hundred ninety-four, authorized under the authority of section five, article twenty, chapter sixteen, of this code, modified by the division of environmental protection to meet the objections of the legislative rule-making review committee and refiled in the state register on the twenty-third day of November, one thousand nine hundred ninety-four, relating to the division of environmental protection (standards of performance for new stationary sources, 45 CSR 16), are authorized with the amendment set forth below:

"On page two, section 4, subsection 4.1, subdivision 4.1.i, by striking out 'Part 60.195(b)' and inserting in lieu thereof 'Part 60.194(d)';

On page two, section 4, subsection 4.1., subdivision 4.1.k, by striking out 'Part 60.335(a)(1)(i)' and inserting in lieu thereof 'Part 60.335(f)(1)';

And,

On page two, section 4, after subdivision 'k', by inserting a new subdivision to read as follows:

'l. Part 60.335(f)(1).'"

(d) The legislative rules filed in the state register on the fifteenth day of August, one thousand nine hundred

1 ninety-four, authorized under the authority of section
2 four, article five, chapter twenty-two, of this code,
3 modified by the division of environmental protection to
4 meet the objections of the legislative rule-making review
5 committee and refiled in the state register on the
6 nineteenth day of December, one thousand nine hundred
7 ninety-four, relating to the division of environmental
8 protection (permits for construction and major modification
9 of major stationary sources of air pollution for the
10 prevention of significant deterioration, 45 CSR 14), are
11 authorized.
12 (e) The legislative rules filed in the state register
13 on the twelfth day of August, one thousand nine hundred
14 ninety-four, authorized under the authority of section
15 four, article five, chapter twenty-two, of this code,
16 modified by the division of environmental protection to
17 meet the objections of the legislative rule-making review
18 committee and refiled in the state register on the
19 twenty-third day of November, one thousand nine hundred
20 ninety-four, relating to the division of environmental
21 protection (requirements for determining conformity of
22 transportation plans, programs and projects developed,
23 funded or approved under title 23 U.S.C. or the federal
24 transit act, to applicable air quality implementation

plans, 45 CSR 36), are authorized.

(f) The legislative rules filed in the state register on the twelfth day of August, one thousand nine hundred ninety-four, authorized under the authority of section four, article five, chapter twenty-two, of this code, modified by the division of environmental protection to meet the objections of the legislative rule-making review committee and refiled in the state register on the twenty-ninth day of December, one thousand nine hundred ninety-four, relating to the division of environmental protection (to prevent and control air pollution from the operation of coal preparation plants and coal handling operations, 45 CSR 5), are authorized.

(g) The legislative rules filed in the state register on the thirteenth day of September, one thousand nine hundred ninety-four, authorized under the authority of section four, article five, chapter twenty-two, of this code, modified by the division of environmental protection to meet the objections of the legislative rule-making review committee and refiled in the state register on the twelfth day of January, one thousand nine hundred ninety-five, relating to the division of environmental protection (to prevent and control air pollution from hazardous waste treatment, storage or disposal facilities,

45 CSR 25), are authorized.

(h) The legislative rules filed in the state register on the twelfth day of August, one thousand nine hundred ninety-four, authorized under the authority of section four, article five, chapter twenty-two, of this code, modified by the division of environmental protection to meet the objections of the legislative rule-making review committee and refiled in the state register on the twenty-third day of November, one thousand nine hundred ninety-four, relating to the division of environmental protection (acid rain provisions and permits, 45 CSR 33), are authorized.

(i) The legislative rules filed in the state register on the twelfth day of August, one thousand nine hundred ninety-four, authorized under the authority of section two, article one, chapter twenty-two, of this code, modified by the division of environmental protection to meet the objections of the legislative rule-making review committee and refiled in the state register on the twenty-third day of November, one thousand nine hundred ninety-four, relating to the division of environmental protection (emission standards for hazardous air pollutants pursuant to 40 CFR Part 61, 45 CSR 15), are authorized.

(j) The legislative rules filed in the state register

on the twelfth day of August, one thousand nine hundred ninety-four, authorized under the authority of section four, article five, chapter twenty-two, of this code, modified by the division of environmental protection to meet the objections of the legislative rule-making review committee and refiled in the state register on the twenty-third day of November, one thousand nine hundred ninety-four, relating to the division of environmental protection (provisions for determination of compliance with air quality management rules, 45 CSR 38), are authorized.

(k) The legislative rules filed in the state register on the twelfth day of August, one thousand nine hundred ninety-four, authorized under the authority of section five, article twenty, chapter sixteen, of this code, modified by the division of environmental protection to meet the objections of the legislative rule-making review committee and refiled in the state register on the twenty-third day of November, one thousand nine hundred ninety-four, relating to the division of environmental protection (to prevent and control air pollution from combustion of refuse, 45 CSR 6), are authorized.

(l) The legislative rules filed in the state register on the fifteenth day of August, one thousand nine hundred ninety-four, authorized under the authority of section

1 four, article fourteen, chapter twenty-two, of this code,
2 modified by the division of environmental protection to
3 meet the objections of the legislative rule-making review
4 committee and refiled in the state register on the fourth
5 day of January, one thousand nine hundred ninety-five,
6 relating to the division of environmental protection (dam
7 safety, 47 CSR 34), are authorized with the amendments set
8 forth below:

9 On page 9, section §47-34-3, by striking out
10 3.5.2.c.A, and substituting therefor the following:

11 "3.5.2.c.A. An impoundment exceeding forty (40) feet
12 in height or four hundred (400) acre-feet storage volume
13 shall not be classified as a Class 3 dam."

14 On pages 17 and 18, section §47-34-7, at the end of
15 section 7.1.1.b.C. by adding the following:

16 "The design precipitation for a Class 3 dam may be
17 reduced based on Risk Assessment pursuant to paragraph
18 3.5.4 of this rule, but in no case to less than a P100
19 rainfall of six (6) hours in duration."

20 On page 40, section §47-34-13, by striking out section
21 13.2 and substituting therefor the following:

22 "Performance Requirements - All dams completed before
23 July 1, 1973, shall meet the applicable design requirements
24 of Section 7 of this rule. Those dams which do not meet

1 the applicable design requirement of Section 7 of this rule
2 shall be modified, breached, removed, or properly abandoned
3 pursuant to the provisions of this rule. In developing the
4 required plans, specifications, and documentation necessary
5 to bring the structure into conformity with section 7 of
6 this rule, the design engineer may consider in his
7 submitted analyses, peculiarities and local conditions for
8 each impounding structure with recognition of the many
9 factors involved, some of which may not be precisely known.
10 Existing construction documentation and the historical
11 performance of the structure including documented storms
12 and spillway flows may be considered by the engineer as
13 part of the evaluation of the structure. Upon approval by
14 the Director of the plans, specifications, and
15 documentation submitted by the engineer, the Director may
16 issue a certificate of approval."
17 (m) The legislative rules filed in the state register
18 on the fifteenth day of August, one thousand nine hundred
19 ninety-four, authorized under the authority of section
20 fifteen, article one, chapter twenty-two, of this code,
21 modified by the division of environmental protection to
22 meet the objections of the legislative rule-making review
23 committee and refiled in the state register on the eleventh
24 day of January, one thousand nine hundred ninety-five,

1 relating to the division of environmental protection
2 (regulations governing environmental laboratories
3 certification and standards of performance, 47 CSR 32), are
4 authorized.

5 (n) The legislative rules filed in the state register
6 on the twenty-eighth day of February, one thousand nine
7 hundred ninety-four, authorized under the authority of
8 section three, article two, chapter twenty-two-c, of this
9 code, modified by the division of environmental protection
10 to meet the objections of the legislative rule-making
11 review committee and refiled in the state register on the
12 twenty-eighth day of July, one thousand nine hundred
13 ninety-four, relating to the division of environmental
14 protection (state water pollution control revolving fund
15 program, 47 CSR 31), are authorized.

16 (o) The legislative rules filed in the state register
17 on the fifteenth day of August, one thousand nine hundred
18 ninety-four, authorized under the authority of section six,
19 article seventeen, chapter twenty-two, of this code,
20 relating to the division of environmental protection
21 (underground storage tanks, 47 CSR 36), are authorized.

22 (p) The legislative rules filed in the state register
23 on the fifteenth day of August, one thousand nine hundred
24 ninety-four, authorized under the authority of section six,

article eighteen, chapter twenty-two, of this code, modified by the division of environmental protection to meet the objections of the legislative rule-making review committee and refiled in the state register on the thirteenth day of January, one thousand nine hundred ninety-five, relating to the division of environmental protection (hazardous waste management regulations, 47 CSR 35), are authorized.

(q) The legislative rules filed in the state register on the twenty-second day of July, one thousand nine hundred ninety-four, authorized under the authority of section four, article three, chapter twenty-two, of this code, modified by the division of environmental protection to meet the objections of the legislative rule-making review committee and refiled in the state register on the twenty-ninth day of August, one thousand nine hundred ninety-four, relating to the division of environmental protection (standards for certification of blasters-surface coal mines, 38 CSR 2C), are authorized with the amendments set forth below:

On page 4, section 38.2C.4, after the words "Form MR-30-TR." by inserting a second paragraph to read as follows:

"In lieu of completing the training program, the

1 applicant for certification or re-certification may
2 complete a self-study course using the study guide and
3 other materials available from the Division of
4 Environmental Protection."

5 On page 8, subsection 8.2, after the words "refresher
6 training course" by inserting the phrase "or complete the
7 self-study course."

8 On page 8 at subsection 10.1 by striking out the
9 phrase "a cessation order and/or take other action as
10 provided in West Virginia Code 22-3-16 and 17" and the
11 phrase "the provisions of West Virginia Code 22-3-1 et
12 seq., rules promulgated under that article, or".

13 On page 9, subsection 11.1, by striking out the
14 subsection and inserting in lieu thereof a new subsection
15 to read as follows: "11.1. **Suspension** - Upon service of a
16 written notice of violation by the Director to a certified
17 blaster, the Director may suspend his or her certification.
18 Prior to the issuance of such an order, the certified
19 blaster shall be granted a hearing before the Director to
20 show cause why his or her certification should not be
21 suspended."

22 On page 9, subsection 11.2, by striking out the phrase
23 "or cessation order" in the first sentence.

24 On page 9, Section 12, by striking out the phrase

1 "cessation order".

2 (r) The legislative rules filed in the state register
3 on the fifteenth day of August, one thousand nine hundred
4 ninety-four, authorized under the authority of section
5 nine, article three, chapter twenty-two, of this code,
6 modified by the division of environmental protection to
7 meet the objections of the legislative rule-making review
8 committee and refiled in the state register on the sixth
9 day of January, one thousand nine hundred ninety-five,
10 relating to the division of environmental protection (rules
11 and regulations relating to abandoned mine lands and
12 reclamation, 38 CSR 2D), are authorized.

13 (s) The Legislature hereby authorizes and directs the
14 division of environmental protection to promulgate the
15 legislative rules filed in the state register on February,
16 seventh, one thousand nine hundred ninety-five, authorized
17 under the authority of section five, article twenty,
18 chapter sixteen, of this code, relating to the division of
19 environmental protection (prevention and control of
20 particulate air pollution from combustion of fuel in
21 indirect heat exchangers, 45 CSR 2), effective the first
22 day of May, one thousand nine hundred ninety-five, with the
23 amendments set forth below:

24 On page eight, section 3.4(e) after the word "operated" by

1 adding the words "at normal operating loads";

2 And,

3 On page thirteen, section 9.4 by striking the words

4 "monthly or", and, following the words "quarterly basis" by

5 striking the word "as"; and by inserting the words "unless

6 otherwise" following the words "quarterly basis".

7 And,

8 On page thirteen, by creating a new section, designated

9 section "45.2.10. Variances.

10 10.1. In the event of an unavoidable shortage of fuel

11 having characteristics or specifications necessary for a

12 fuel burning unit to comply with the opacity standards set

13 forth in section 3 or any emergency situation or condition

14 creating a threat to public safety or welfare, the Director

15 may grant an exception to the otherwise applicable visible

16 emission standards for a period not to exceed fifteen (15)

17 days, provided that visible emissions during the exception

18 period do not exceed a maximum six (6) minute average of

19 thirty (30) percent and that a reasonable demonstration is

20 made by the owner or operator that the emission standards

21 under section 4 of this rule will not be exceeded during

22 the exemption period."

23 10.2. In the event a fuel burning unit employing a

24 flue gas desulphurization system must by-pass such system

1 because of necessary planned or unplanned maintenance,
2 visible emissions may not exceed twenty percent (20%)
3 opacity during such period of maintenance. The Director
4 may require advance notice of necessary planned
5 maintenance, including a description of the necessity of
6 the maintenance activity and its expected duration and may
7 limit the duration of the variance or the amount of the
8 excess opacity exception herein allowed. The Director
9 shall be notified of unplanned maintenance and may limit
10 the duration of the variance or the amount of excess
11 opacity exception allowed during unplanned maintenance.
12 And, by renumbering subsequent sections.
13 (t) The legislative rules filed in the state register
14 on the nineteenth day of August, one thousand nine hundred
15 ninety-four, authorized under the authority of section
16 four, article three, chapter twenty-two, of this code,
17 relating to the division of environmental protection
18 (surface mining and reclamation regulations, 38 CSR 2), are
19 authorized "with the amendments set forth below"
20 On pages 2 and 3, by striking out subsections 1.6, 1.7
21 and 1.8 in their entirety;
22 On page 6, by inserting a new subsection 2.20, to read
23 as follows, and renumbering subsequent subsections;
24 "Chemical Treatment means - the treatment of water

1 from a surface coal mining operation using chemical
2 reagents such as but not limited to sodium hydroxide,
3 calcium carbonate, or anhydrous ammonia for purposes of
4 meeting applicable state and federal effluent limitations.
5 Chemical treatment does not include passive treatment
6 systems such as but not limited to limestone drains,
7 wetlands, alkaline addition, application of flyash,
8 agricultural lime, or injection of flyash, limestone, or
9 other minerals into underground coal operations."
10 On page 16, section 2, by striking out subsection 2.92
11 and renumbering the subsequent subsections.
12 On page 25, by striking the second paragraph of
13 subsection 3.1 (o) and inserting in lieu thereof a new
14 second paragraph 3.1 of subsection 3.1 (o), to read as
15 follows: "Any permit application which references an
16 approved centralized ownership and control file may be
17 determined to be complete and accurate for the purposes of
18 this subsection. Each centralized ownership and control
19 file shall at a minimum:"
20 On page 63, by striking out subsection 3.25 (e).
21 On page 63, by striking out the first sentence in
22 subsection 3.26, and inserting in lieu thereof the
23 following:
24 "(a) All changes including name changes, replacements,

1 and additions to the ownership or control data relative to
2 a permittee or assignee who will function as an operator
3 pursuant to the provisions of paragraph (c) of subsection
4 3.25 of this rule shall be reported to the Director."
5 On page 64, after subsection 3.26 (a) (5) by inserting
6 a new subsection 3.26 (a) (6) to read as follows:
7 "(6) In the event that a permittee or operator has
8 incurred no changes in its ownership and control
9 information and therefore has not been obligated to file
10 a report within any consecutive twelve-month period, that
11 permittee or operator is required to notify the Director in
12 writing that no changes to the information required by
13 paragraphs (b), (c), (d) and (i) of subsection 3.1 of this
14 rule have occurred."
15 On page 64, by striking out subsection 3.27 (a) and
16 inserting in lieu thereof the following:
17 "(a) All active surface mining operations shall be
18 subject to the renewal requirements and provisions for
19 issuance of a renewal discussed in Section 19 of the Act:
20 *Provided,* That the Director may waive the requirement for
21 renewal if the permittee certifies in writing that all coal
22 extraction is completed, that all backfilling and regrading
23 will be completed within sixty (60) days prior to the
24 expiration date of the permit, and that an application for

1 Phase I bond release will be filed prior to the expiration
2 date of the permit. Failure of the permittee complete
3 backfilling and regrading within sixty (60) days prior to
4 the expiration date of the permit will nullify the waiver.
5 Those operations which have been granted inactive
6 status in accordance with subsection 14.11 of this rule
7 shall also be subject to the renewal requirements of
8 Section 19 of the Act.
9 Applications for renewal shall be filed on forms
10 provided by the Director and shall contain at a minimum the
11 following information:"
12 On page 79, by striking out subsection 3.32 (i) and
13 renumbering the remaining subsections.
14 On page 80, subsection 3.34 (b) after the word
15 "criteria" by inserting the words "paragraph (b) of
16 subsection 3.32 of this section";
17 On page 80, by striking out subsection 3.34 (b) (3)
18 and substituting therefor a new subsection 3.34 (b) (3), to
19 read as follows: "(3) The permittee was linked to a
20 violation, penalty or fee through ownership or control,
21 under the violation review criteria, paragraph (b) of
22 subsection 3.32 of this section at the time the permit was
23 issued and an ownership or control link between the
24 permittee and the person responsible for the violation,

1 penalty or fee still exists, or when the link was severed
2 the permittee continues to be responsible for the
3 violation, penalty or fee."
4 On page 82, by striking out subsection 3.34 (g) and
5 substituting therefor a new subparagraph (g) to read as
6 follows:
7 "(g) For purposes of this subsection, a permit is
8 issued when it is originally approved, as well as when a
9 transfer, assignment, or sale of permit rights is approved
10 pursuant to paragraphs (a) or (c), subsection 3.25 of this
11 rule, or where a permit is revised pursuant to subsection
12 3.26 of this rule."
13 On page 86, at the end of subsection 4.4, by adding
14 the following sentence: "Prospecting roads are to be
15 designed, constructed, maintained, and reclaimed in
16 accordance with the provisions of subsection 13.6 of this
17 rule."
18 On page 88, by inserting a new subsection 4.7 (a) (1)
19 to read as follows: (1) Minimize downstream sedimentation
20 and flooding and renumbering the remaining subsections.
21 On page 92, subsection 4.12, by inserting a new
22 sentence between the second and third sentence which reads
23 as follows: "Where the certification statement indicates a
24 change from the design standards or construction

1 requirements approved in the permit, such changes will be
2 documented in as-built plans and submitted for approval to
3 the Director as a permit revision."
4 On Page 148, section 11.6 (a) in the underscored
5 language, after the word, "completed" by inserting the
6 words "or nearly completed".
7 On Page 223, by striking out subsection 14.14 (g) (8)
8 and inserting in lieu thereof a new subsection 14.14 (g)
9 (8), to read as follows: "(8) Surface water runoff from
10 areas above and adjacent to the fill shall be diverted into
11 properly designed and constructed stabilized diversion
12 channels which have been designed using best current
13 technology to safely pass the peak runoff from a 100 year,
14 24-hour precipitation event. The channel shall be designed
15 and constructed to ensure stability of the fill, control
16 erosion, and minimize water infiltration into the fill."
17 On Page 232, by inserting a new subsection, designated
18 subsection 14.19 (d) to read as follows: "(d) Timber from
19 clearing and grubbing operations may be wind-rowed below
20 the projected toe of the outslope in a manner that will
21 provide shelter and habitat for game and non-game wildlife
22 and provide for enhanced sediment control. These materials
23 may not be placed in natural water courses or where they
24 will be covered by spoil material at the toe of the

1 outslope. The wind-rows must be of relatively uniform
2 height and width and must be more or less evenly
3 distributed along the lower reaches and within the permit
4 area."

5 On Page 240, subsection 17.1, in the first sentence,
6 after the words "mining and reclamation," by striking out
7 the remainder of the paragraph and substituting therefor
8 the following: "required by the Act and these Rules,
9 including the engineering analyses and designs; the
10 development of cross-section maps and plans; the geologic
11 drilling and statement of results of test borings and core
12 samplings; preblast surveys; the collection of
13 site-specific resource information and production of
14 protection and enhancement plans for fish and wildlife
15 habitats and other environmental values; and the collection
16 of archaeological and historical information; and any other
17 archaeological and historical information required by the
18 federal department of the interior and the preparation of
19 plans that may be necessitated thereby; and the director
20 shall provide or assume the cost of training coal operators
21 that meet the qualifications concerning the preparation of
22 permit applications and compliance with the regulatory
23 program, and shall ensure that qualified coal operators are
24 aware of the assistance available under this section.

1 On Page 240, subsection 17.1, after the first
2 paragraph by inserting a new paragraph, to read as follows:
3 "The Director will develop a procedure for the interstate
4 coordination and exchange of information collected under
5 the Small Operators Assistance Program."
6 On Page 241, by striking out subsection 17.4 in its
7 entirety and substituting therefor the following: "17.4
8 Request for Assistance. Each applicant requesting
9 assistance shall provide information on forms provided by
10 the director in an application that shall be clear and
11 concise and shall be provided in a format prescribed by the
12 Director and/or a format required by the Federal Office of
13 Surface Mining Reclamation and Enforcement."
14 On Page 249, subsection 17.7 (a) (4), after the words
15 "twelve (12) month period" by striking the remainder of the
16 sentence and inserting in lieu thereof the words
17 "immediately following permit issuance."
18 On page 273, subsection 20.6 (a), after the word
19 "first" by striking out the words "thirty (30)" and
20 inserting in lieu thereof the word "fifteen".
21 On page 273, subsection 20.6 (c), after the words
22 "date of the" by striking out the words "Assessment Officer
23 receiving the
24 finding specified in paragraph (a) of this subsection." and

1 inserting in lieu thereof the words "issuance of a notice
2 or order";
3 On page 274, subsection 20.6 (d), by striking out the
4 first sentence, and inserting in lieu thereof the
5 following: "The time and place of an informal assessment
6 conference shall be posted at the Department of
7 Environmental Protection Office nearest to the operation.
8 (u) The legislative rules filed in the state register
9 on the thirty-first day of July, one thousand nine hundred
10 ninety-five, authorized under the authority of section
11 four, article five, chapter twenty-two, of this code,
12 relating to the division of environmental protection (to
13 prevent and control of air pollution from the emission of
14 volatile organic compounds, 45 CSR 21), are authorized.
15
16 NOTE: The purpose of this bill is to authorize the
17 Division of Environmental Protection to promulgate
18 legislative rules relating to the prevention and control of
19 air pollution from the emission of volatile organic
20 compounds.
21
22 Strike-throughs indicate language that would be
23 stricken from the present law, and underscoring indicates
24 new language that would be added.

SENATE BILL NO. 245

(By Senators Ross, Anderson, Boley, Buckalew, Grubb and Macnaughtan)

[Introduced January 29,1996; referred to the Committee on

NATURAL RESOURCES

4521

A BILL to amend and reenact section one, article three, chapter sixty-four of the code of West Virginia, one thousand nine hundred thirty-one, as amended, relating to authorizing the division of environmental protection to promulgate legislative rules relating to the prevention and control of air pollution from the emission of volatile organic compounds.

Be it enacted by the Legislature of West Virginia:

That section one, article three, chapter sixty-four of the code of West Virginia, one thousand nine hundred thirty-one, as amended, be amended and reenacted, to read as follows:

ARTICLE 3. AUTHORIZATION FOR BUREAU OF ENVIRONMENT TO PROMULGATE LEGISLATIVE RULES.

§64-3-1. Division of environmental protection.

(a) The legislative rules filed in the state register on the twelfth day of August, one thousand nine hundred ninety-four, authorized under the authority of section four, article five, chapter twenty-two, of this code, modified by the division of environmental protection to meet the objections of the legislative rule-making review committee and refiled in the state register on the twenty-third day of November, one thousand nine hundred ninety-four, relating to the division of environmental protection (requirements for determining conformity of general federal actions to applicable air quality implementation plans (general conformity), 45 CSR 35), are authorized.

(b) The legislative rules filed in the state register on the twelfth day of August, one thousand nine hundred ninety-four, authorized under the authority of section four, article five, chapter twenty-two, of this code, modified by the division of environmental protection to meet the objections of the legislative rule-making review committee and refiled in the state register on the twenty-third day of November, one thousand nine hundred ninety-four, relating to the division of environmental protection (emission standards for hazardous air pollutants pursuant to 40 CFR Part 63, 45 CSR 34), are authorized.

(c) The legislative rules filed in the state register on the twelfth day of August, one thousand nine hundred ninety-four, authorized under the authority of section five, article twenty, chapter sixteen, of this code, modified by the division of environmental protection to meet the objections of the legislative rule-making review committee and refiled in the state register on the twenty-third day of November, one thousand nine hundred ninety-four, relating to the division of environmental protection (standards of performance for new stationary sources, 45 CSR 16), are authorized with the amendment set forth below:

"On page two, section 4, subsection 4.1, subdivision 4.1.i, by striking out 'Part 60.195(b)' and inserting in lieu thereof 'Part 60.194(d)';

On page two, section 4, subsection 4.1., subdivision 4.1.k, by striking out 'Part 60.335(a)(1)(i)' and inserting in lieu thereof 'Part 60.335(f)(1)';

And,

On page two, section 4, after subdivision 'k', by inserting a new subdivision to read as follows:

'l. Part 60.335(f)(1).'"

(d) The legislative rules filed in the state register on the fifteenth day of August, one thousand nine hundred

1 ninety-four, authorized under the authority of section
2 four, article five, chapter twenty-two, of this code,
3 modified by the division of environmental protection to
4 meet the objections of the legislative rule-making review
5 committee and refiled in the state register on the
6 nineteenth day of December, one thousand nine hundred
7 ninety-four, relating to the division of environmental
8 protection (permits for construction and major modification
9 of major stationary sources of air pollution for the
10 prevention of significant deterioration, 45 CSR 14), are
11 authorized.
12 (e) The legislative rules filed in the state register
13 on the twelfth day of August, one thousand nine hundred
14 ninety-four, authorized under the authority of section
15 four, article five, chapter twenty-two, of this code,
16 modified by the division of environmental protection to
17 meet the objections of the legislative rule-making review
18 committee and refiled in the state register on the
19 twenty-third day of November, one thousand nine hundred
20 ninety-four, relating to the division of environmental
21 protection (requirements for determining conformity of
22 transportation plans, programs and projects developed,
23 funded or approved under title 23 U.S.C. or the federal
24 transit act, to applicable air quality implementation

1 plans, 45 CSR 36), are authorized.

2 (f) The legislative rules filed in the state register
3 on the twelfth day of August, one thousand nine hundred
4 ninety-four, authorized under the authority of section
5 four, article five, chapter twenty-two, of this code,
6 modified by the division of environmental protection to
7 meet the objections of the legislative rule-making review
8 committee and refiled in the state register on the twenty-
9 ninth day of December, one thousand nine hundred
10 ninety-four, relating to the division of environmental
11 protection (to prevent and control air pollution from the
12 operation of coal preparation plants and coal handling
13 operations, 45 CSR 5), are authorized.

14 (g) The legislative rules filed in the state register
15 on the thirteenth day of September, one thousand nine
16 hundred ninety-four, authorized under the authority of
17 section four, article five, chapter twenty-two, of this
18 code, modified by the division of environmental protection
19 to meet the objections of the legislative rule-making
20 review committee and refiled in the state register on the
21 twelfth day of January, one thousand nine hundred
22 ninety-five, relating to the division of environmental
23 protection (to prevent and control air pollution from
24 hazardous waste treatment, storage or disposal facilities,

45 CSR 25), are authorized.

(h) The legislative rules filed in the state register on the twelfth day of August, one thousand nine hundred ninety-four, authorized under the authority of section four, article five, chapter twenty-two, of this code, modified by the division of environmental protection to meet the objections of the legislative rule-making review committee and refiled in the state register on the twenty-third day of November, one thousand nine hundred ninety-four, relating to the division of environmental protection (acid rain provisions and permits, 45 CSR 33), are authorized.

(i) The legislative rules filed in the state register on the twelfth day of August, one thousand nine hundred ninety-four, authorized under the authority of section two, article one, chapter twenty-two, of this code, modified by the division of environmental protection to meet the objections of the legislative rule-making review committee and refiled in the state register on the twenty-third day of November, one thousand nine hundred ninety-four, relating to the division of environmental protection (emission standards for hazardous air pollutants pursuant to 40 CFR Part 61, 45 CSR 15), are authorized.

(j) The legislative rules filed in the state register

on the twelfth day of August, one thousand nine hundred ninety-four, authorized under the authority of section four, article five, chapter twenty-two, of this code, modified by the division of environmental protection to meet the objections of the legislative rule-making review committee and refiled in the state register on the twenty-third day of November, one thousand nine hundred ninety-four, relating to the division of environmental protection (provisions for determination of compliance with air quality management rules, 45 CSR 38), are authorized.

(k) The legislative rules filed in the state register on the twelfth day of August, one thousand nine hundred ninety-four, authorized under the authority of section five, article twenty, chapter sixteen, of this code, modified by the division of environmental protection to meet the objections of the legislative rule-making review committee and refiled in the state register on the twenty-third day of November, one thousand nine hundred ninety-four, relating to the division of environmental protection (to prevent and control air pollution from combustion of refuse, 45 CSR 6), are authorized.

(l) The legislative rules filed in the state register on the fifteenth day of August, one thousand nine hundred ninety-four, authorized under the authority of section

four, article fourteen, chapter twenty-two, of this code, modified by the division of environmental protection to meet the objections of the legislative rule-making review committee and refiled in the state register on the fourth day of January, one thousand nine hundred ninety-five, relating to the division of environmental protection (dam safety, 47 CSR 34), are authorized with the amendments set forth below:

On page 9, section §47-34-3, by striking out 3.5.2.c.A, and substituting therefor the following:

"3.5.2.c.A. An impoundment exceeding forty (40) feet in height or four hundred (400) acre-feet storage volume shall not be classified as a Class 3 dam."

On pages 17 and 18, section §47-34-7, at the end of section 7.1.1.b.C. by adding the following:

"The design precipitation for a Class 3 dam may be reduced based on Risk Assessment pursuant to paragraph 3.5.4 of this rule, but in no case to less than a P100 rainfall of six (6) hours in duration."

On page 40, section §47-34-13, by striking out section 13.2 and substituting therefor the following:

"Performance Requirements - All dams completed before July 1, 1973, shall meet the applicable design requirements of Section 7 of this rule. Those dams which do not meet

1 the applicable design requirement of Section 7 of this rule
2 shall be modified, breached, removed, or properly abandoned
3 pursuant to the provisions of this rule. In developing the
4 required plans, specifications, and documentation necessary
5 to bring the structure into conformity with section 7 of
6 this rule, the design engineer may consider in his
7 submitted analyses, peculiarities and local conditions for
8 each impounding structure with recognition of the many
9 factors involved, some of which may not be precisely known.
10 Existing construction documentation and the historical
11 performance of the structure including documented storms
12 and spillway flows may be considered by the engineer as
13 part of the evaluation of the structure. Upon approval by
14 the Director of the plans, specifications, and
15 documentation submitted by the engineer, the Director may
16 issue a certificate of approval."
17 (m) The legislative rules filed in the state register
18 on the fifteenth day of August, one thousand nine hundred
19 ninety-four, authorized under the authority of section
20 fifteen, article one, chapter twenty-two, of this code,
21 modified by the division of environmental protection to
22 meet the objections of the legislative rule-making review
23 committee and refiled in the state register on the eleventh
24 day of January, one thousand nine hundred ninety-five,

relating to the division of environmental protection (regulations governing environmental laboratories certification and standards of performance, 47 CSR 32), are authorized.

(n) The legislative rules filed in the state register on the twenty-eighth day of February, one thousand nine hundred ninety-four, authorized under the authority of section three, article two, chapter twenty-two-c, of this code, modified by the division of environmental protection to meet the objections of the legislative rule-making review committee and refiled in the state register on the twenty-eighth day of July, one thousand nine hundred ninety-four, relating to the division of environmental protection (state water pollution control revolving fund program, 47 CSR 31), are authorized.

(o) The legislative rules filed in the state register on the fifteenth day of August, one thousand nine hundred ninety-four, authorized under the authority of section six, article seventeen, chapter twenty-two, of this code, relating to the division of environmental protection (underground storage tanks, 47 CSR 36), are authorized.

(p) The legislative rules filed in the state register on the fifteenth day of August, one thousand nine hundred ninety-four, authorized under the authority of section six,

article eighteen, chapter twenty-two, of this code, modified by the division of environmental protection to meet the objections of the legislative rule-making review committee and refiled in the state register on the thirteenth day of January, one thousand nine hundred ninety-five, relating to the division of environmental protection (hazardous waste management regulations, 47 CSR 35), are authorized.

(q) The legislative rules filed in the state register on the twenty-second day of July, one thousand nine hundred ninety-four, authorized under the authority of section four, article three, chapter twenty-two, of this code, modified by the division of environmental protection to meet the objections of the legislative rule-making review committee and refiled in the state register on the twenty-ninth day of August, one thousand nine hundred ninety-four, relating to the division of environmental protection (standards for certification of blasters-surface coal mines, 38 CSR 2C), are authorized with the amendments set forth below:

On page 4, section 38.2C.4, after the words "Form MR-30-TR." by inserting a second paragraph to read as follows:

"In lieu of completing the training program, the

1 applicant for certification or re-certification may
2 complete a self-study course using the study guide and
3 other materials available from the Division of
4 Environmental Protection."

5 On page 8, subsection 8.2, after the words "refresher
6 training course" by inserting the phrase "or complete the
7 self-study course."

8 On page 8 at subsection 10.1 by striking out the
9 phrase "a cessation order and/or take other action as
10 provided in West Virginia Code 22-3-16 and 17" and the
11 phrase "the provisions of West Virginia Code 22-3-1 et
12 seq., rules promulgated under that article, or".

13 On page 9, subsection 11.1, by striking out the
14 subsection and inserting in lieu thereof a new subsection
15 to read as follows: "11.1. **Suspension** - Upon service of a
16 written notice of violation by the Director to a certified
17 blaster, the Director may suspend his or her certification.
18 Prior to the issuance of such an order, the certified
19 blaster shall be granted a hearing before the Director to
20 show cause why his or her certification should not be
21 suspended."

22 On page 9, subsection 11.2, by striking out the phrase
23 "or cessation order" in the first sentence.

24 On page 9, Section 12, by striking out the phrase

1 "cessation order".

2 (r) The legislative rules filed in the state register
3 on the fifteenth day of August, one thousand nine hundred
4 ninety-four, authorized under the authority of section
5 nine, article three, chapter twenty-two, of this code,
6 modified by the division of environmental protection to
7 meet the objections of the legislative rule-making review
8 committee and refiled in the state register on the sixth
9 day of January, one thousand nine hundred ninety-five,
10 relating to the division of environmental protection (rules
11 and regulations relating to abandoned mine lands and
12 reclamation, 38 CSR 2D), are authorized.

13 (s) The Legislature hereby authorizes and directs the
14 division of environmental protection to promulgate the
15 legislative rules filed in the state register on February,
16 seventh, one thousand nine hundred ninety-five, authorized
17 under the authority of section five, article twenty,
18 chapter sixteen, of this code, relating to the division of
19 environmental protection (prevention and control of
20 particulate air pollution from combustion of fuel in
21 indirect heat exchangers, 45 CSR 2), effective the first
22 day of May, one thousand nine hundred ninety-five, with the
23 amendments set forth below:

24 On page eight, section 3.4(e) after the word "operated" by

1 adding the words "at normal operating loads";

2 And,

3 On page thirteen, section 9.4 by striking the words

4 "monthly or", and, following the words "quarterly basis" by

5 striking the word "as"; and by inserting the words "unless

6 otherwise" following the words "quarterly basis".

7 And,

8 On page thirteen, by creating a new section, designated

9 section "45.2.10. Variances.

10 10.1. In the event of an unavoidable shortage of fuel

11 having characteristics or specifications necessary for a

12 fuel burning unit to comply with the opacity standards set

13 forth in section 3 or any emergency situation or condition

14 creating a threat to public safety or welfare, the Director

15 may grant an exception to the otherwise applicable visible

16 emission standards for a period not to exceed fifteen (15)

17 days, provided that visible emissions during the exception

18 period do not exceed a maximum six (6) minute average of

19 thirty (30) percent and that a reasonable demonstration is

20 made by the owner or operator that the emission standards

21 under section 4 of this rule will not be exceeded during

22 the exemption period."

23 10.2. In the event a fuel burning unit employing a

24 flue gas desulphurization system must by-pass such system

because of necessary planned or unplanned maintenance, visible emissions may not exceed twenty percent (20%) opacity during such period of maintenance. The Director may require advance notice of necessary planned maintenance, including a description of the necessity of the maintenance activity and its expected duration and may limit the duration of the variance or the amount of the excess opacity exception herein allowed. The Director shall be notified of unplanned maintenance and may limit the duration of the variance or the amount of excess opacity exception allowed during unplanned maintenance.

And, by renumbering subsequent sections.

(t) The legislative rules filed in the state register on the nineteenth day of August, one thousand nine hundred ninety-four, authorized under the authority of section four, article three, chapter twenty-two, of this code, relating to the division of environmental protection (surface mining and reclamation regulations, 38 CSR 2), are authorized "with the amendments set forth below"

On pages 2 and 3, by striking out subsections 1.6, 1.7 and 1.8 in their entirety;

On page 6, by inserting a new subsection 2.20, to read as follows, and renumbering subsequent subsections;

"Chemical Treatment means - the treatment of water

1 from a surface coal mining operation using chemical
2 reagents such as but not limited to sodium hydroxide,
3 calcium carbonate, or anhydrous ammonia for purposes of
4 meeting applicable state and federal effluent limitations.
5 Chemical treatment does not include passive treatment
6 systems such as but not limited to limestone drains,
7 wetlands, alkaline addition, application of flyash,
8 agricultural lime, or injection of flyash, limestone, or
9 other minerals into underground coal operations."
10 On page 16, section 2, by striking out subsection 2.92
11 and renumbering the subsequent subsections.
12 On page 25, by striking the second paragraph of
13 subsection 3.1 (o) and inserting in lieu thereof a new
14 second paragraph 3.1 of subsection 3.1 (o), to read as
15 follows: "Any permit application which references an
16 approved centralized ownership and control file may be
17 determined to be complete and accurate for the purposes of
18 this subsection. Each centralized ownership and control
19 file shall at a minimum:"
20 On page 63, by striking out subsection 3.25 (e).
21 On page 63, by striking out the first sentence in
22 subsection 3.26, and inserting in lieu thereof the
23 following:
24 "(a) All changes including name changes, replacements,

1 and additions to the ownership or control data relative to
2 a permittee or assignee who will function as an operator
3 pursuant to the provisions of paragraph (c) of subsection
4 3.25 of this rule shall be reported to the Director."
5 On page 64, after subsection 3.26 (a) (5) by inserting
6 a new subsection 3.26 (a) (6) to read as follows:
7 "(6) In the event that a permittee or operator has
8 incurred no changes in its ownership and control
9 information and therefore has not been obligated to file
10 a report within any consecutive twelve-month period, that
11 permittee or operator is required to notify the Director in
12 writing that no changes to the information required by
13 paragraphs (b), (c), (d) and (i) of subsection 3.1 of this
14 rule have occurred."
15 On page 64, by striking out subsection 3.27 (a) and
16 inserting in lieu thereof the following:
17 "(a) All active surface mining operations shall be
18 subject to the renewal requirements and provisions for
19 issuance of a renewal discussed in Section 19 of the Act:
20 *Provided,* That the Director may waive the requirement for
21 renewal if the permittee certifies in writing that all coal
22 extraction is completed, that all backfilling and regrading
23 will be completed within sixty (60) days prior to the
24 expiration date of the permit, and that an application for

1 Phase I bond release will be filed prior to the expiration
2 date of the permit. Failure of the permittee complete
3 backfilling and regrading within sixty (60) days prior to
4 the expiration date of the permit will nullify the waiver.
5 Those operations which have been granted inactive
6 status in accordance with subsection 14.11 of this rule
7 shall also be subject to the renewal requirements of
8 Section 19 of the Act.
9 Applications for renewal shall be filed on forms
10 provided by the Director and shall contain at a minimum the
11 following information:"
12 On page 79, by striking out subsection 3.32 (i) and
13 renumbering the remaining subsections.
14 On page 80, subsection 3.34 (b) after the word
15 "criteria" by inserting the words "paragraph (b) of
16 subsection 3.32 of this section";
17 On page 80, by striking out subsection 3.34 (b) (3)
18 and substituting therefor a new subsection 3.34 (b) (3), to
19 read as follows: "(3) The permittee was linked to a
20 violation, penalty or fee through ownership or control,
21 under the violation review criteria, paragraph (b) of
22 subsection 3.32 of this section at the time the permit was
23 issued and an ownership or control link between the
24 permittee and the person responsible for the violation,

1 penalty or fee still exists, or when the link was severed
2 the permittee continues to be responsible for the
3 violation, penalty or fee."
4 On page 82, by striking out subsection 3.34 (g) and
5 substituting therefor a new subparagraph (g) to read as
6 follows:
7 "(g) For purposes of this subsection, a permit is
8 issued when it is originally approved, as well as when a
9 transfer, assignment, or sale of permit rights is approved
10 pursuant to paragraphs (a) or (c), subsection 3.25 of this
11 rule, or where a permit is revised pursuant to subsection
12 3.26 of this rule."
13 On page 86, at the end of subsection 4.4, by adding
14 the following sentence: "Prospecting roads are to be
15 designed, constructed, maintained, and reclaimed in
16 accordance with the provisions of subsection 13.6 of this
17 rule."
18 On page 88, by inserting a new subsection 4.7 (a) (1)
19 to read as follows: (1) Minimize downstream sedimentation
20 and flooding and renumbering the remaining subsections.
21 On page 92, subsection 4.12, by inserting a new
22 sentence between the second and third sentence which reads
23 as follows: "Where the certification statement indicates a
24 change from the design standards or construction

1 requirements approved in the permit, such changes will be
2 documented in as-built plans and submitted for approval to
3 the Director as a permit revision."

4 On Page 148, section 11.6 (a) in the underscored
5 language, after the word, "completed" by inserting the
6 words "or nearly completed".

7 On Page 223, by striking out subsection 14.14 (g) (8)
8 and inserting in lieu thereof a new subsection 14.14 (g)
9 (8), to read as follows: "(8) Surface water runoff from
10 areas above and adjacent to the fill shall be diverted into
11 properly designed and constructed stabilized diversion
12 channels which have been designed using best current
13 technology to safely pass the peak runoff from a 100 year,
14 24-hour precipitation event. The channel shall be designed
15 and constructed to ensure stability of the fill, control
16 erosion, and minimize water infiltration into the fill."

17 On Page 232, by inserting a new subsection, designated
18 subsection 14.19 (d) to read as follows: "(d) Timber from
19 clearing and grubbing operations may be wind-rowed below
20 the projected toe of the outslope in a manner that will
21 provide shelter and habitat for game and non-game wildlife
22 and provide for enhanced sediment control. These materials
23 may not be placed in natural water courses or where they
24 will be covered by spoil material at the toe of the

1 outslope. The wind-rows must be of relatively uniform
2 height and width and must be more or less evenly
3 distributed along the lower reaches and within the permit
4 area."

5 On Page 240, subsection 17.1, in the first sentence,
6 after the words "mining and reclamation," by striking out
7 the remainder of the paragraph and substituting therefor
8 the following: "required by the Act and these Rules,
9 including the engineering analyses and designs; the
10 development of cross-section maps and plans; the geologic
11 drilling and statement of results of test borings and core
12 samplings; preblast surveys; the collection of
13 site-specific resource information and production of
14 protection and enhancement plans for fish and wildlife
15 habitats and other environmental values; and the collection
16 of archaeological and historical information; and any other
17 archaeological and historical information required by the
18 federal department of the interior and the preparation of
19 plans that may be necessitated thereby; and the director
20 shall provide or assume the cost of training coal operators
21 that meet the qualifications concerning the preparation of
22 permit applications and compliance with the regulatory
23 program, and shall ensure that qualified coal operators are
24 aware of the assistance available under this section.

1 On Page 240, subsection 17.1, after the first
2 paragraph by inserting a new paragraph, to read as follows:
3 "The Director will develop a procedure for the interstate
4 coordination and exchange of information collected under
5 the Small Operators Assistance Program."
6 On Page 241, by striking out subsection 17.4 in its
7 entirety and substituting therefor the following: "17.4
8 Request for Assistance. Each applicant requesting
9 assistance shall provide information on forms provided by
10 the director in an application that shall be clear and
11 concise and shall be provided in a format prescribed by the
12 Director and/or a format required by the Federal Office of
13 Surface Mining Reclamation and Enforcement."
14 On Page 249, subsection 17.7 (a) (4), after the words
15 "twelve (12) month period" by striking the remainder of the
16 sentence and inserting in lieu thereof the words
17 "immediately following permit issuance."
18 On page 273, subsection 20.6 (a), after the word
19 "first" by striking out the words "thirty (30)" and
20 inserting in lieu thereof the word "fifteen".
21 On page 273, subsection 20.6 (c), after the words
22 "date of the" by striking out the words "Assessment Officer
23 receiving the
24 finding specified in paragraph (a) of this subsection." and

1 inserting in lieu thereof the words "issuance of a notice
2 or order";
3 On page 274, subsection 20.6 (d), by striking out the
4 first sentence, and inserting in lieu thereof the
5 following: "The time and place of an informal assessment
6 conference shall be posted at the Department of
7 Environmental Protection Office nearest to the operation.
8 (u) The legislative rules filed in the state register
9 on the thirty-first day of July, one thousand nine hundred
10 ninety-five, authorized under the authority of section
11 four, article five, chapter twenty-two, of this code,
12 relating to the division of environmental protection (to
13 prevent and control of air pollution from the emission of
14 volatile organic compounds, 45 CSR 21), are authorized.
15
16 NOTE: The purpose of this bill is to authorize the
17 Division of Environmental Protection to promulgate
18 legislative rules relating to the prevention and control of
19 air pollution from the emission of volatile organic
20 compounds.
21
22 Strike-throughs indicate language that would be
23 stricken from the present law, and underscoring indicates
24 new language that would be added.

KEN HECHLER
Secretary of State

MARY P. RATLIFF
Deputy Secretary of State

STEPHEN N. REED
Deputy Secretary of State

CATHERINE FREROTTE
Executive Assistant

Telephone: (304) 558-6000
Corporations: (304) 558-8000
FAX: (304) 558-0900

STATE OF WEST VIRGINIA

SECRETARY OF STATE

Building 1, Suite 157-K
1900 Kanawha Blvd., East
Charleston, WV 25305-0770

WILLIAM H. HARRINGTON
Chief of Staff

JUDY COOPER
Director, Administrative Law

PENNEY BARKER
Supervisor, Corporations

(Plus all the volunteer help we can get)

March 12, 1996

G. Dale Farley
DEP - Air Quality
1558 Washington Street East
Charleston, WV 25311

HB 4224 authorizing, **Title 45, Series 21**, **Regulation to Prevent & Control Air Pollution from the Emission of Volatile Organic Compounds** passed the Legislature on **March 9, 1996**. It is now awaiting the Governor's signature.

You have sixty (60) days after the Governor signs **HB 4224** to final file the legislative rule with the Secretary of State's office. To final file your legislative rule, fill in the blanks on the enclosed form #6, the "Final Filing" form and file the form with our office with a promulgation history of the rule. Authorization for your legislative rule is cited in **HB 4224 Section 64-3-1(j)**. The agency may set the effective date of the legislative rule up to ninety (90) days from the date the legislative rule is final filed with the Secretary of State's office. Please have an authorized signature on the bottom line.

***IMPORTANT: IF YOUR AGENCY HAS COMPLETED THE LEGISLATIVE RULE ON A WORD PERFECT OR WORD PERFECT COMPATIBLE COMPUTER SYSTEM THAT USES A 3 1/2" DISK, **YOU MUST SUBMIT A CLEAN COPY WITH ALL UNDERLINING AND STRIKE-THROUGHS, HEADERS OR FOOTERS REMOVED,** TO OUR OFFICE WHEN FINAL FILING THE RULE. REMEMBER, THE TEXT OF THE COMPUTER FILED RULE **MUST BE** IDENTICAL - WORD FOR WORD, COMMA FOR COMMA, **WITH ALL UNDERLINING, STRIKE-THROUGHS, HEADERS OR FOOTERS REMOVED,** AS THE HARD COPY AUTHORIZED BY THE LEGISLATURE. **NOTICE: ALL ELECTRONIC FILINGS NOT COMPLYING WITH THIS WILL BE REJECTED AND SENT BACK TO THE AGENCY TO BE RESUBMITTED!**

After the final rule is entered into the data base, the rule will be sent back to the agency for review and proofing. The agency has ten (10) working days to send a confirmation or corrections to the Secretary of States. If the agency fails to return this within ten (10) working days, the rule will be filed in the data base with a disclaimer attached stating that the agency failed to review the rule. Following confirmation, corrections or failure to review, as the case may be, the Secretary of State shall submit to the agency a final version of the rule for their records.

If you have any questions or need any assistance, please do not hesitate to contact our office.

Thank you,
Administrative Law Division